LM2586 4-V to 40-V, 3-A Step-Up Wide V_{IN} Flyback Regulator

1 Features

- Requires Few External Components
- Family of Standard Inductors and Transformers
- NPN Output Switches 3 A, Can Stand Off 65 V
- Wide Input Voltage Range: 4 V to 40 V
- Adjustable Switching Frequency: 100 kHz to 200 kHz
- External Shutdown Capability
- Draws Less Than 60 μA When Shut Down
- Frequency Synchronization
- Current-mode Operation for Improved Transient Response, Line Regulation, and Current Limit
- Internal Soft-start Function Reduces In-rush Current During Start-up
- Output Transistor Protected by Current Limit, Undervoltage Lockout, and Thermal Shutdown
- System Output Voltage Tolerance of ±4% Maximum Over Line and Load Conditions
- Create a Custom Design Using the LM2586 With the WEBENCH® Power Designer

2 Typical Applications

- Flyback Regulator
- Forward Converter
- Multiple-output Regulator
- Simple Boost Regulator

3 Description

The LM2586 series of regulators are monolithic integrated circuits specifically designed for flyback, step-up (boost), and forward converter applications. The device is available in 4 different output voltage versions: 3.3 V, 5 V, 12 V, and adjustable.

Requiring a minimum number of external components, these regulators are cost effective, and simple to use. Included in the datasheet are typical circuits of boost and flyback regulators. Also listed are selector guides for diodes and capacitors and a family of standard inductors and flyback transformers designed to work with these switching regulators.

The power switch is a 3-A NPN device that can stand-off 65 V. Protecting the power switch are current and thermal limiting circuits, and an undervoltage lockout circuit. This IC contains an adjustable frequency oscillator that can be programmed up to 200 kHz. The oscillator can also be synchronized with other devices, so that multiple devices can operate at the same switching frequency.

Other features include soft start mode to reduce in-rush current during start up, and current mode control for improved rejection of input voltage and output load transients and cycle-by-cycle current limiting. The device also has a shutdown pin, so that it can be turned off externally. An output voltage tolerance of ±4%, within specified input voltages and output load conditions, is ensured for the power supply system.

Device Information(1)

PART NUMBER	PACKAGE	BODY SIZE (NOM)
LM2586	TO-220 (7)	10.1 mm × 8.89 mm
	DDPAK /TO-263 (7)	14.986 mm × 10.16 mm

(1) For all available packages, see the orderable addendum at the end of the data sheet.

Block Diagram

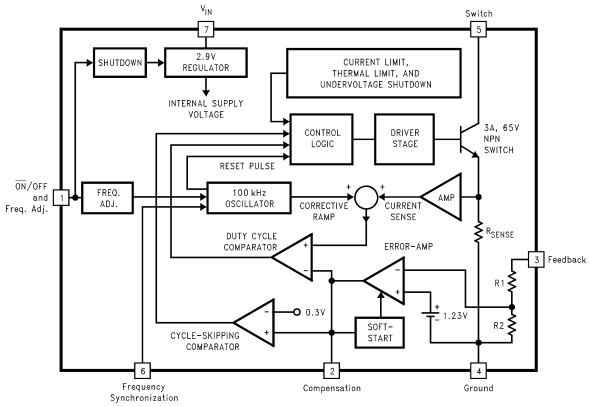

An IMPORTANT NOTICE at the end of this data sheet addresses availability, warranty, changes, use in safety-critical applications, intellectual property matters and other important disclaimers. PRODUCTION DATA.

Table of Contents

1 Features ... 1
2 Typical Applications ... 1
3 Description ... 1
4 Revision History ... 2
5 Pin Configurations ... 3
6 Specifications ... 4
6.1 Absolute Maximum Ratings ... 4
6.2 ESD Ratings ... 4
6.3 Recommended Operating Ratings ... 4
6.4 Thermal Information ... 5
6.5 Electrical Characteristics: 3.3 V ... 5
6.6 Electrical Characteristics: 5 V ... 6
6.7 Electrical Characteristics: 12 V ... 7
6.8 Electrical Characteristics: Adjustable ... 8
6.9 Typical Characteristics ... 10
7 Detailed Description ... 13
7.1 Overview ... 13
7.2 Functional Block Diagram ... 13
7.3 Feature Description ... 13
8 Application and Implementation ... 20
8.1 Application Information ... 20
8.2 Typical Applications ... 20
8.3 System Examples ... 31
9 Layout ... 33
9.1 Layout Guidelines ... 33
9.2 Layout Example ... 33
9.3 Heat Sink/Thermal Considerations ... 33
10 Device and Documentation Support ... 35
10.1 Device Support ... 35
10.2 Receiving Notification of Documentation Updates 35
10.3 Community Resources ... 35
10.4 Trademarks ... 35
10.5 Electrostatic Discharge Caution ... 36
10.6 Glossary ... 36
11 Mechanical, Packaging, and Orderable Information ... 36

4 Revision History

NOTE: Page numbers for previous revisions may differ from page numbers in the current version.

Changes from Revision D (April 2013) to Revision E	Page
• Editorial changes only, no technical revisions	1

Changes from Revision C (April 2013) to Revision D	Page
• Changed layout of National Semiconductor data sheet to TI format	34

Copyright © 1996–2019, Texas Instruments Incorporated

5 Pin Configurations

NDZ Package
7-Pin TO-220
Top View, Bent, Staggered Leads

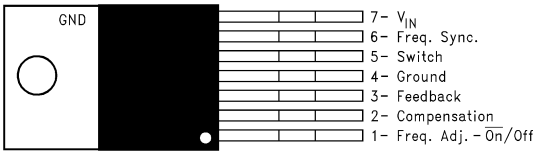

KTW Package
7-Pin DDPAK/TO-263
Top View

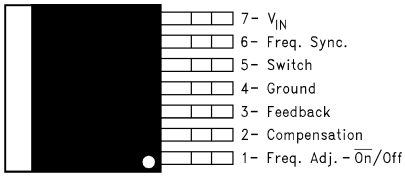

NDZ Package
7-Pin TO-220
Side View; Bent, Staggered Leads

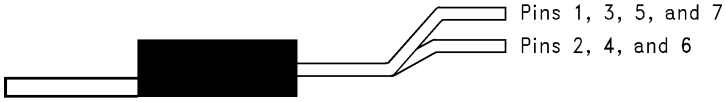

KTW Package
7-Pin DDPAK/TO-263
Side View

6 Specifications

6.1 Absolute Maximum Ratings (1)(2)

Input Voltage	−0.4V ≤ V_{IN} ≤ 45V
Switch Voltage	−0.4V ≤ V_{SW} ≤ 65V
Switch Current (3)	Internally Limited
Compensation Pin Voltage	−0.4V ≤ V_{COMP} ≤ 2.4V
Feedback Pin Voltage	−0.4V ≤ V_{FB} ≤ 2 V_{OUT}
$\overline{ON}$ /OFF Pin Voltage	−0.4V ≤ V_{SH} ≤ 6V
Sync Pin Voltage	−0.4V ≤ V_{SYNC} ≤ 2V
Power Dissipation (4)	Internally Limited
Storage Temperature Range	−65°C to +150°C
Lead Temperature (Soldering, 10 sec.)	260°C
Maximum Junction Temperature (4)	150°C

(1) If Military/Aerospace specified devices are required, contact the Texas Instruments Sales Office/ Distributors for availability and specifications.
(2) Absolute Maximum Ratings indicate limits beyond which damage to the device may occur. These ratings apply when the current is limited to less than 1.2 mA for pins 1, 2, 3, and 6. Operating ratings indicate conditions for which the device is intended to be functional, but device parameter specifications may not be ensured under these conditions. For ensured specifications and test conditions, see the *Electrical Characteristics*.
(3) Note that switch current and output current are not identical in a step-up regulator. Output current cannot be internally limited when the LM2586 is used as a step-up regulator. To prevent damage to the switch, the output current must be externally limited to 3A. However, output current is internally limited when the LM2586 is used as a flyback regulator (see the section for more information).
(4) The junction temperature of the device (T_J) is a function of the ambient temperature (T_A), the junction-to-ambient thermal resistance (θ_{JA}), and the power dissipation of the device (P_D). A thermal shutdown will occur if the temperature exceeds the maximum junction temperature of the device: $P_D \times \theta_{JA} + T_{A(MAX)} \geq T_{J(MAX)}$. For a safe thermal design, check that the maximum power dissipated by the device is less than: $P_D \leq [T_{J(MAX)} - T_{A(MAX)}]/\theta_{JA}$. When calculating the maximum allowable power dissipation, derate the maximum junction temperature—this ensures a margin of safety in the thermal design.

6.2 ESD Ratings

			VALUE	UNIT
$V_{(ESD)}$	Electrostatic discharge (minimum)	Human-body model (HBM), per ANSI/ESDA/JEDEC JS-001 (1) (C = 100 pF, R = 1.5 kΩ)	2000	V

(1) JEDEC document JEP155 states that 500-V HBM allows safe manufacturing with a standard ESD control process.

6.3 Recommended Operating Ratings

Supply Voltage	4V ≤ V_{IN} ≤ 40V
Output Switch Voltage	0V ≤ V_{SW} ≤ 60V
Output Switch Current	I_{SW} ≤ 3A
Junction Temp. Range	−40°C ≤ T_J ≤ +125°C

Copyright © 1996–2019, Texas Instruments Incorporated

6.4 Thermal Information

THERMAL METRIC[1]		LM2585		UNIT
		KTW (DDPAK/TO-263	NDZ (TO-220)	
		7 PINS	7 PINS	
$R_{\theta JA}$	Junction-to-ambient thermal resistance	56[2]	65[3]	°C/W
		35[4]	45[5]	
		26[6]	—	
$R_{\theta JC}$	Junction-to-case thermal resistance	2	2	°C/W

(1) For more information about traditional and new thermal metrics, see the *Semiconductor and IC package thermal metrics* application report.
(2) Junction-to-ambient thermal resistance for the 7-lead TO-263 mounted horizontally against a PC board area of 0.136 square inches (the same size as the DDPAK/TO-263 package) of 1 oz. (0.0014 in. thick) copper.
(3) Junction-to-ambient thermal resistance (no external heat sink) for the 7-lead TO-220 package mounted vertically, with ½ inch leads in a socket, or on a PC board with minimum copper area.
(4) Junction-to-ambient thermal resistance for the 7-lead TO-263 mounted horizontally against a PC board area of 0.4896 square inches (3.6 times the area of the DDPAK/TO-263 package) of 1 oz. (0.0014 in. thick) copper.
(5) Junction-to-ambient thermal resistance (no external heat sink) for the 7-lead TO-220 package mounted vertically, with ½ inch leads soldered to a PC board containing approximately 4 square inches of (1 oz.) copper area surrounding the leads.
(6) Junction-to-ambient thermal resistance for the 7-lead TO-263 mounted horizontally against a PC board copper area of 1.0064 square inches (7.4 times the area of the DDPAK/TO-2633 package) of 1 oz. (0.0014 in. thick) copper. Additional copper area reduces thermal resistance further.

6.5 Electrical Characteristics: 3.3 V

Specifications with standard type face are for T_J = 25°C, and those in **bold type face** apply over full **Operating Temperature Range.** Unless otherwise specified, V_{IN} = 5V.

PARAMETER		TEST CONDITIONS	TYP	MIN	MAX	UNIT
SYSTEM PARAMETERS Test Circuit of Figure 54[1]						
V_{OUT}	Output Voltage	V_{IN} = 4V to 12V I_{LOAD} = 0.3 to 1.2A	3.3	3.17/**3.14**	3.43/**3.46**	V
$\Delta V_{OUT}/\Delta V_{IN}$	Line Regulation	V_{IN} = 4V to 12V I_{LOAD} = 0.3A	20		50/**100**	mV
$\Delta V_{OUT}/\Delta I_{LOAD}$	Load Regulation	V_{IN} = 12V I_{LOAD} = 0.3A to 1.2A	20		50/**100**	mV
η	Efficiency	V_{IN} = 5V, I_{LOAD} = 0.3A	76%			
UNIQUE DEVICE PARAMETERS [2]						
V_{REF}	Output Reference Voltage	Measured at Feedback Pin V = 1.0V	3.3	3.242/**3.234**	3.358/**3.366**	V
ΔV_{REF}	Reference Voltage Line Regulation	V_{IN} = 4V to 40V	2			mV
G_M	Error Amp Transconductance	I_{COMP} = −30 μA to +30 μA V_{COMP} = 1V	1.193	**0.678**	**2.259**	mmho
A_{VOL}	Error Amp Voltage Gain	V_{COMP} = 0.5V to 1.6V R_{COMP} = 1 MΩ [3]	260	151/**75**		V/V

(1) External components such as the diode, inductor, input and output capacitors can affect switching regulator performance. When the LM2586 is used as shown in Figure 54 and Figure 55, system performance will be as specified by the system parameters.
(2) All room temperature limits are 100% production tested, and all limits at temperature extremes are specified via correlation using standard Statistical Quality Control (SQC) methods.
(3) A 1.0 MΩ resistor is connected to the compensation pin (which is the error amplifier output) to ensure accuracy in measuring A_{VOL}.

Copyright © 1996–2019, Texas Instruments Incorporated

6.6 Electrical Characteristics: 5 V

PARAMETER		TEST CONDITIONS	TYP	MIN	MAX	UNIT
SYSTEM PARAMETERS Test Circuit of $_{COMP}$Figure 54 (1)						
V_{OUT}	Output Voltage	V_{IN} = 4V to 12V I_{LOAD} = 0.3A to 1.1A	5.0	4.80/**4.75**	5.20/**5.25**	V
$\Delta V_{OUT}/\Delta V_{IN}$	Line Regulation	V_{IN} = 4V to 12V I_{LOAD} = 0.3A	20		50/**100**	mV
$\Delta V_{OUT}/\Delta I_{LOAD}$	Load Regulation	V_{IN} = 12V I_{LOAD} = 0.3A to 1.1A	20		50/**100**	mV
η	Efficiency	V_{IN} = 12V, I_{LOAD} = 0.6A	80%			
UNIQUE DEVICE PARAMETERS (2)						
V_{REF}	Output Reference Voltage	Measured at Feedback Pin V_{COMP} = 1 V	5.0	4.913/**4.900**	5.088/**5.100**	V
ΔV_{REF}	Reference Voltage Line Regulation	V_{IN} = 4V to 40V	3.3			mV
G_M	Error Amp Transconductance	I_{COMP} = −30 μA to +30 μA V_{COMP} = 1 V	0.750	**0.447**	**1.491**	mmho
A_{VOL}	Error Amp Voltage Gain	V_{COMP} = 0.5V to 1.6V R_{COMP} = 1 MΩ (3)	165	99/**49**		V/V

(1) External components such as the diode, inductor, input and output capacitors can affect switching regulator performance. When the LM2586 is used as shown in Figure 54 and Figure 55, system performance will be as specified by the system parameters.
(2) All room temperature limits are 100% production tested, and all limits at temperature extremes are specified via correlation using standard Statistical Quality Control (SQC) methods.
(3) A 1.0 MΩ resistor is connected to the compensation pin (which is the error amplifier output) to ensure accuracy in measuring A_{VOL}.

Copyright © 1996–2019, Texas Instruments Incorporated

6.7 Electrical Characteristics: 12 V

PARAMETER		TEST CONDITIONS	TYP	MIN	MAX	UNIT
SYSTEM PARAMETERS Test Circuit of Figure 55 (1)						
V_{OUT}	Output Voltage	V_{IN} = 4V to 10V I_{LOAD} = 0.2A to 0.8A	12	11.52/**11.40**	12.48/**12.60**	V
$\Delta V_{OUT}/\Delta V_{IN}$	Line Regulation	V_{IN} = 4V to 10V I_{LOAD} = 0.2A	20		100/**200**	mV
$\Delta V_{OUT}/\Delta I_{LOAD}$	Load Regulation	V_{IN} = 10V I_{LOAD} = 0.2A to 0.8A	20		100/**200**	mV
η	Efficiency	V_{IN} = 10V, I_{LOAD} = 0.6A	93%			
UNIQUE DEVICE PARAMETERS (2)						
V_{REF}	Output Reference Voltage	Measured at Feedback Pin V_{COMP} = 1.0V	12	11.79/**11.76**	12.21/**12.24**	V
ΔV_{REF}	Reference Voltage Line Regulation	V_{IN} = 4V to 40V	7.8			mV
G_M	Error Amp Transconductance	I_{COMP} = −30 μA to +30 μA V_{COMP} = 1.0V	0.328	**0.186**	**0.621**	mmho
A_{VOL}	Error Amp Voltage Gain	V_{COMP} = 0.5V to 1.6V R_{COMP} = 1.0 MΩ (3)	70	41/**21**		V/V

(1) External components such as the diode, inductor, input and output capacitors can affect switching regulator performance. When the LM2586 is used as shown in Figure 54 and Figure 55, system performance will be as specified by the system parameters.
(2) All room temperature limits are 100% production tested, and all limits at temperature extremes are specified via correlation using standard Statistical Quality Control (SQC) methods.
(3) A 1.0 MΩ resistor is connected to the compensation pin (which is the error amplifier output) to ensure accuracy in measuring A_{VOL}.

Copyright © 1996–2019, Texas Instruments Incorporated

6.8 Electrical Characteristics: Adjustable

PARAMETER		TEST CONDITIONS	TYP	MIN	MAX	UNIT
SYSTEM PARAMETERS Test Circuit of Figure 55 (1)						
V_{OUT}	Output Voltage	V_{IN} = 4V to 10V I_{LOAD} = 0.2A to 0.8A	12.0	11.52/**11.40**	12.48/**12.60**	V
$\Delta V_{OUT}/\Delta V_{IN}$	Line Regulation	V_{IN} = 4V to 10V I_{LOAD} = 0.2A	20		100/**200**	mV
$\Delta V_{OUT}/\Delta I_{LOAD}$	Load Regulation	V_{IN} = 10V I_{LOAD} = 0.2A to 0.8A	20		100/**200**	mV
η	Efficiency	V_{IN} = 10V, I_{LOAD} = 0.6A	93			%
UNIQUE DEVICE PARAMETERS (2)						
V_{REF}	Output Reference Voltage	Measured at Feedback Pin V_{COMP} = 1.0V	1.230	1.208/**1.205**	1.252/**1.255**	V
ΔV_{REF}	Reference Voltage Line Regulation	V_{IN} = 4V to 40V	1.5			mV
G_M	Error Amp Transconductance	I_{COMP} = −30 μA to +30 μA V_{COMP} = 1.0V	3.200	**1.800**	**6.000**	mmho
A_{VOL}	Error Amp Voltage Gain	V_{COMP} = 0.5V to 1.6V, R_{COMP} = 1.0 MΩ (3)	670	400/**200**		V/V
I_B	Error Amp Input Bias Current	V_{COMP} = 1.0V	125		425/**600**	nA
COMMON DEVICE PARAMETERS for all versions (2)						
I_S	Input Supply Current	Switch Off (4)	11		15.5/**16.5**	mA
		I_{SWITCH} = 1.8A	50		100/**115**	mA
$I_{S/D}$	Shutdown Input Supply Current	V_{SH} = 3V	16		100/**300**	μA
V_{UV}	Input Supply Undervoltage Lockout	R_{LOAD} = 100Ω	3.30	**3.05**	**3.75**	V
f_O	Oscillator Frequency	Measured at Switch Pin R_{LOAD} = 100Ω, V_{COMP} = 1.0V Freq. Adj. Pin Open (Pin 1)	100	85/**75**	115/**125**	kHz
		R_{SET} = 22 kΩ	200			kHz
f_{SC}	Short-Circuit Frequency	Measured at Switch Pin R_{LOAD} = 100Ω $V_{FEEDBACK}$ = 1.15V	25			kHz
V_{EAO}	Error Amplifier Output Swing	Upper Limit (5)	2.8	2.6/**2.4**		V
		Lower Limit (4)	0.25		0.40/**0.55**	V
I_{EAO}	Error Amp Output Current (Source or Sink)	See (6)	165	110/**70**	260/**320**	μA
I_{SS}	Soft Start Current	$V_{FEEDBACK}$ = 0.92V V_{COMP} = 1.0V	11.0	8.0/**7.0**	17.0/**19.0**	μA
D_{MAX}	Maximum Duty Cycle	R_{LOAD} = 100Ω (5)	98%	93%/**90%**		
I_L	Switch Leakage Current	Switch Off V_{SWITCH} = 60V	15		300/**600**	μA
V_{SUS}	Switch Sustaining Voltage	dV/dT = 1.5V/ns		65		V
V_{SAT}	Switch Saturation Voltage	I_{SWITCH} = 3.0A	0.45		0.65/**0.9**	V

(1) External components such as the diode, inductor, input and output capacitors can affect switching regulator performance. When the LM2586 is used as shown in Figure 54 and Figure 55, system performance will be as specified by the system parameters.
(2) All room temperature limits are 100% production tested, and all limits at temperature extremes are specified via correlation using standard Statistical Quality Control (SQC) methods.
(3) A 1.0 MΩ resistor is connected to the compensation pin (which is the error amplifier output) to ensure accuracy in measuring A_{VOL}.
(4) To measure this parameter, the feedback voltage is set to a high value, depending on the output version of the device, to force the error amplifier output low and the switch off.
(5) To measure this parameter, the feedback voltage is set to a low value, depending on the output version of the device, to force the error amplifier output high and the switch on.
(6) To measure the worst-case error amplifier output current, the LM2586 is tested with the feedback voltage set to its low value (Note 4) and at its high value (Note 5).

Copyright © 1996–2019, Texas Instruments Incorporated

Electrical Characteristics: Adjustable (continued)

PARAMETER		TEST CONDITIONS	TYP	MIN	MAX	UNIT
I_{CL}	NPN Switch Current Limit		4.0	**3.0**	**7.0**	A
V_{STH}	Synchronization Threshold Voltage	F_{SYNC} = 200 kHz V_{COMP} = 1V, V_{IN} = 5V	0.75	0.625/**0.40**	0.875/**1.00**	V
I_{SYNC}	Synchronization Pin Current	V_{IN} = 5V V_{COMP} = 1V, V_{SYNC} = V_{STH}	100		**200**	μA
V_{SHTH}	$\overline{ON}$/OFF Pin (Pin 1) Threshold Voltage	V_{COMP} = 1V (7)	1.6	1.0/**0.8**	2.2/**2.4**	V
I_{SH}	$\overline{ON}$/OFF Pin (Pin 1) Current	V_{COMP} = 1V V_{SH} = V_{SHTH}	40	15/**10**	65/**75**	μA

(7) When testing the minimum value, do not sink current from this pin—isolate it with a diode. If current is drawn from this pin, the frequency adjust circuit will begin operation (Figure 25).

6.9 Typical Characteristics

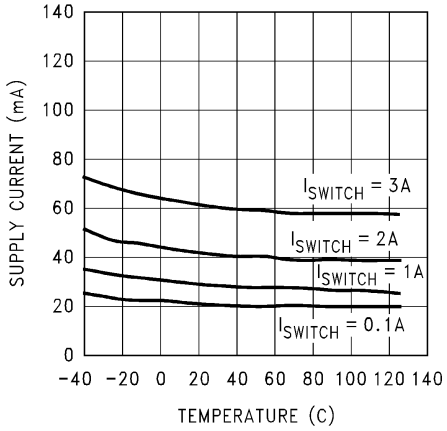

Figure 1. Supply Current vs Temperature

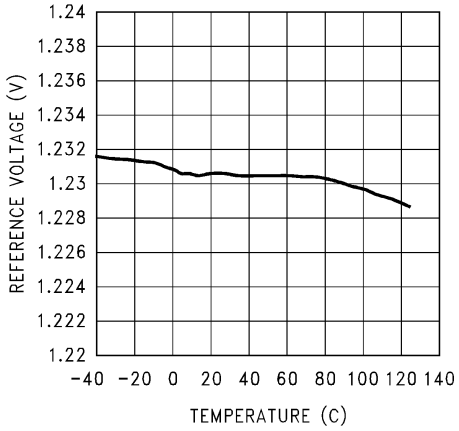

Figure 2. Reference Voltage vs Temperature

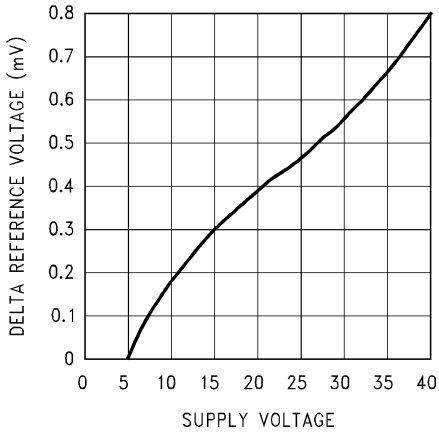

Figure 3. Δreference Voltage vs Supply Voltage

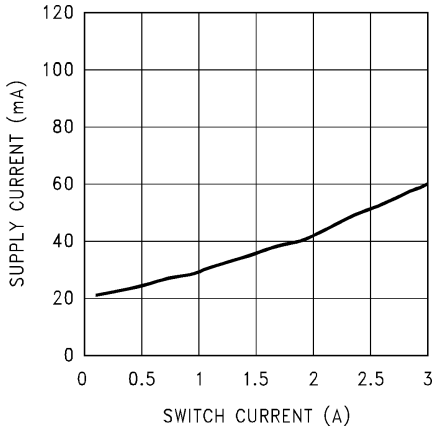

Figure 4. Supply Current vs Switch Current

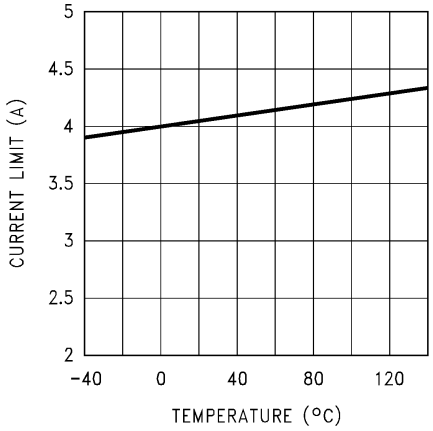

Figure 5. Current Limit vs Temperature

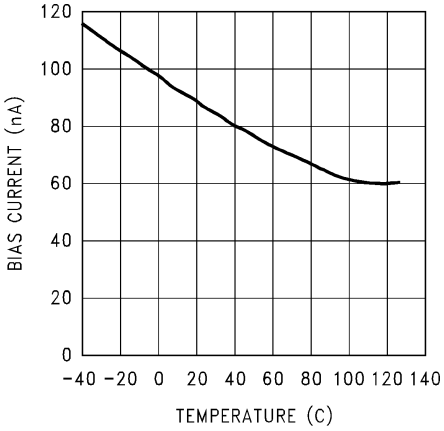

Figure 6. Feedback Pin Bias Current vs Temperature

Copyright © 1996–2019, Texas Instruments Incorporated

Typical Characteristics (continued)

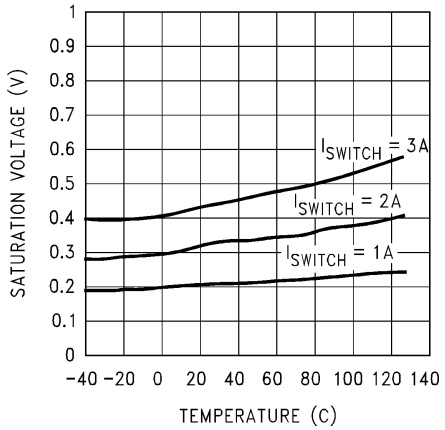

Figure 7. Switch Saturation Voltage vs Temperature

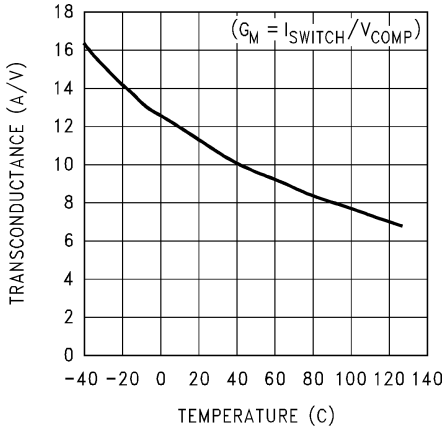

Figure 8. Switch Transconductance vs Temperature

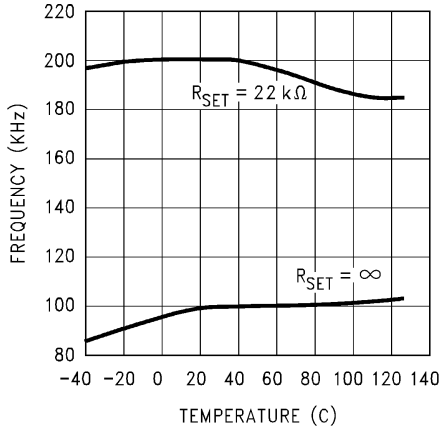

Figure 9. Oscillator Frequency vs Temperature

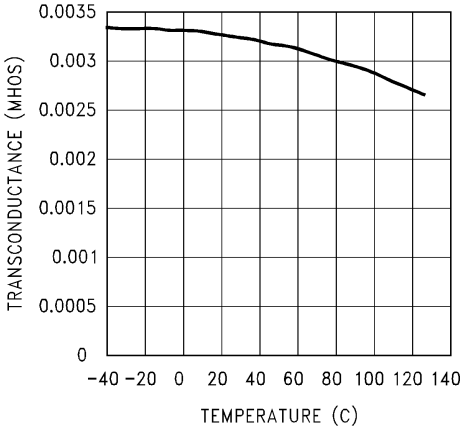

Figure 10. Error Amp Transconductance vs Temperature

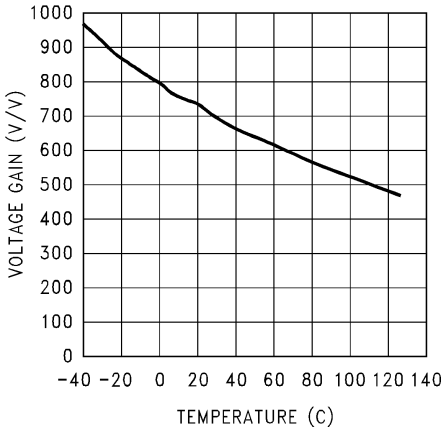

Figure 11. Error Amp Voltage Gain vs Temperature

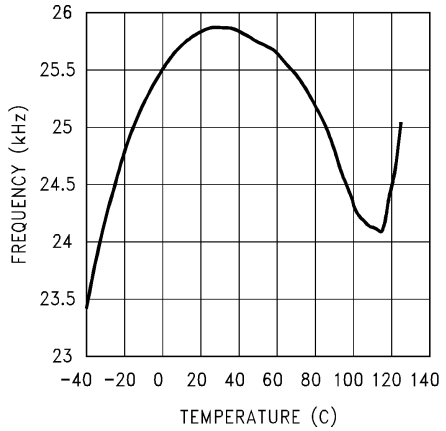

Figure 12. Short Circuit Frequency vs Temperature

Typical Characteristics (continued)

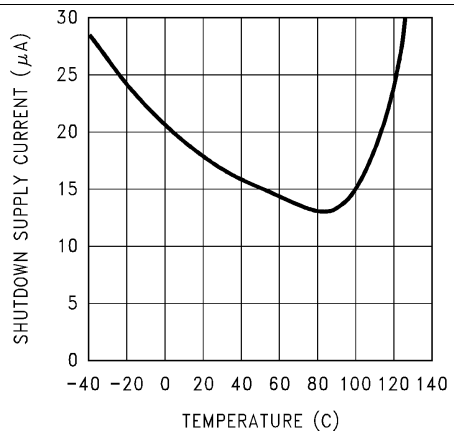

Figure 13. Shutdown Supply Current vs Temperature

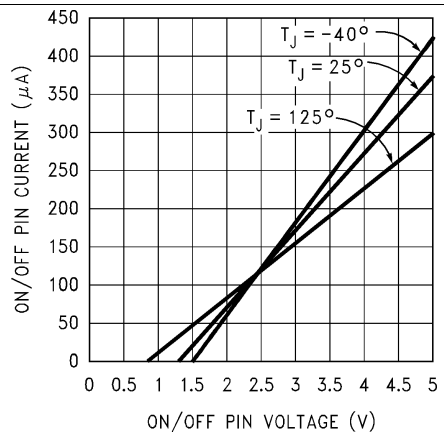

Figure 14. $\overline{\text{ON}}$/Off Pin Current vs Voltage

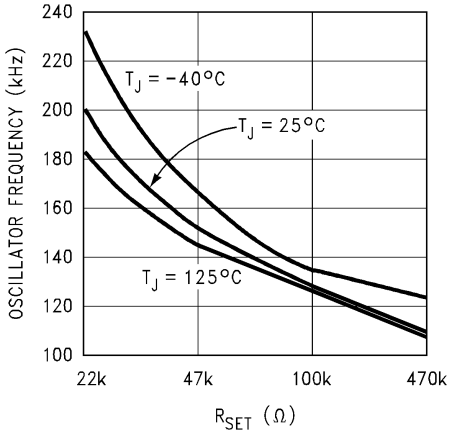

Figure 15. Oscillator Frequency vs Resistance

Copyright © 1996–2019, Texas Instruments Incorporated

7 Detailed Description

7.1 Overview

The LM2586 series of regulators are monolithic integrated circuits specifically designed for flyback, step-up (boost), and forward converter applications. The device is available in 4 different output voltage versions: 3.3 V, 5 V, 12 V, and adjustable. Requiring a minimum number of external components, these regulators are cost effective, and simple to use. Included in the datasheet are typical circuits of boost and flyback regulators. Also listed are selector guides for diodes and capacitors and a family of standard inductors and flyback transformers designed to work with these switching regulators.

7.2 Functional Block Diagram

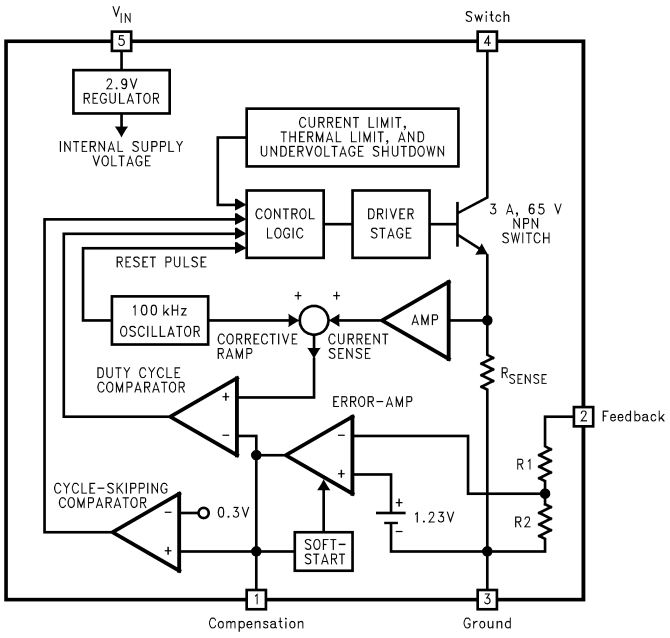

For Fixed Versions
3.3V, R1 = 3.4k, R2 = 2k
5V, R1 = 6.15k, R2 = 2k
12V, R1 = 8.73k, R2 = 1k
For Adj. Version
R1 = Short (0Ω), R2 = Open

7.3 Feature Description

7.3.1 Flyback Regulator Operation

The LM2586 is ideally suited for use in the flyback regulator topology. The flyback regulator can produce a single output voltage, such as the one shown in Figure 16, or multiple output voltages. In Figure 16, the flyback regulator generates an output voltage that is inside the range of the input voltage. This feature is unique to flyback regulators and cannot be duplicated with buck or boost regulators.

The operation of a flyback regulator is as follows (refer to Figure 16): when the switch is on, current flows through the primary winding of the transformer, T1, storing energy in the magnetic field of the transformer. Note that the primary and secondary windings are out of phase, so no current flows through the secondary when current flows through the primary. When the switch turns off, the magnetic field collapses, reversing the voltage polarity of the primary and secondary windings. Now rectifier D1 is forward biased and current flows through it, releasing the energy stored in the transformer. This produces voltage at the output.

Feature Description (continued)

The output voltage is controlled by modulating the peak switch current. This is done by feeding back a portion of the output voltage to the error amp, which amplifies the difference between the feedback voltage and a 1.230V reference. The error amp output voltage is compared to a ramp voltage proportional to the switch current (in other words, inductor current during the switch on time). The comparator terminates the switch on time when the two voltages are equal, thereby controlling the peak switch current to maintain a constant output voltage.

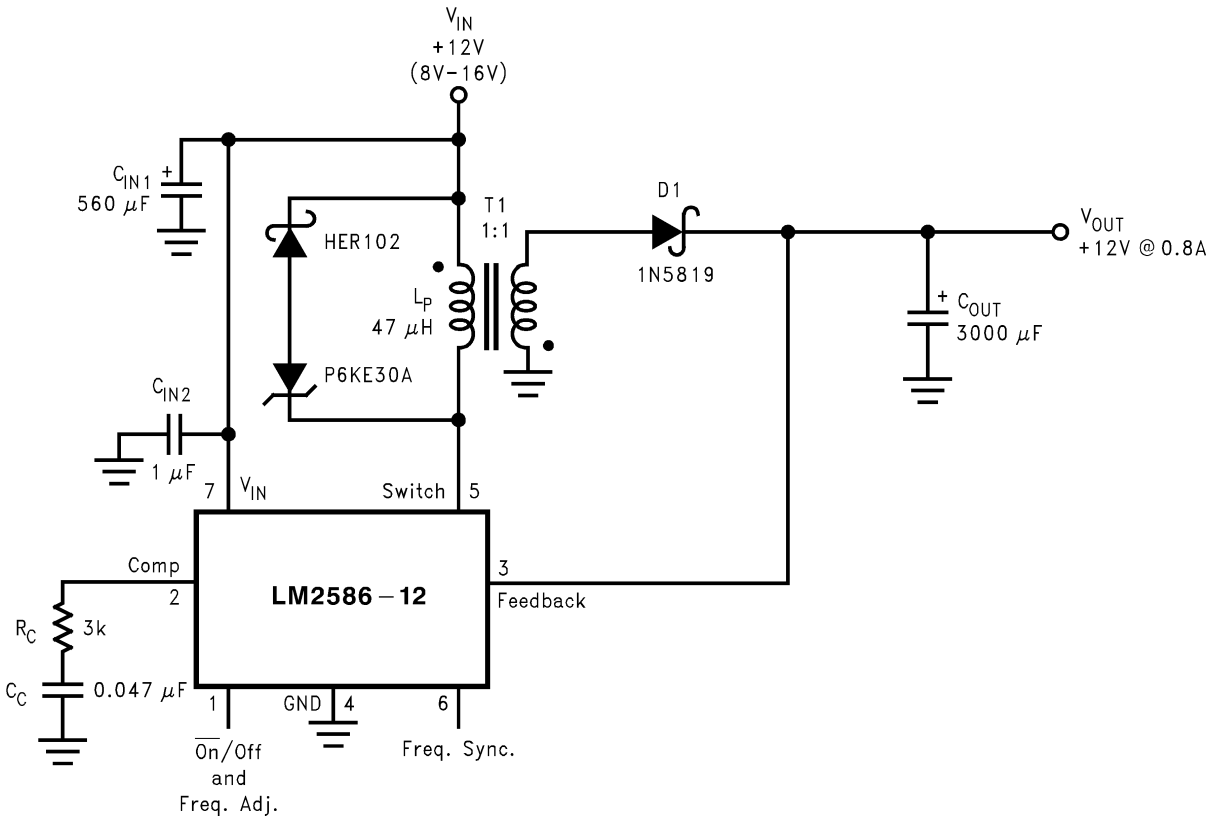

As shown in Figure 16, the LM2586 can be used as a flyback regulator by using a minimum number of external components. The switching waveforms of this regulator are shown in . Typical performance characteristics observed during the operation of this circuit are shown in .

Figure 16. 12-V Flyback Regulator Design Example

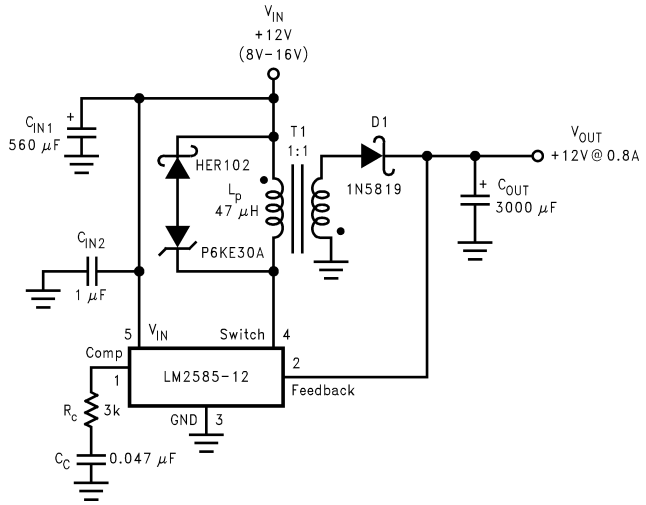

Figure 17. 12-V Flyback Regulator Design Example

Copyright © 1996–2019, Texas Instruments Incorporated

Feature Description (continued)

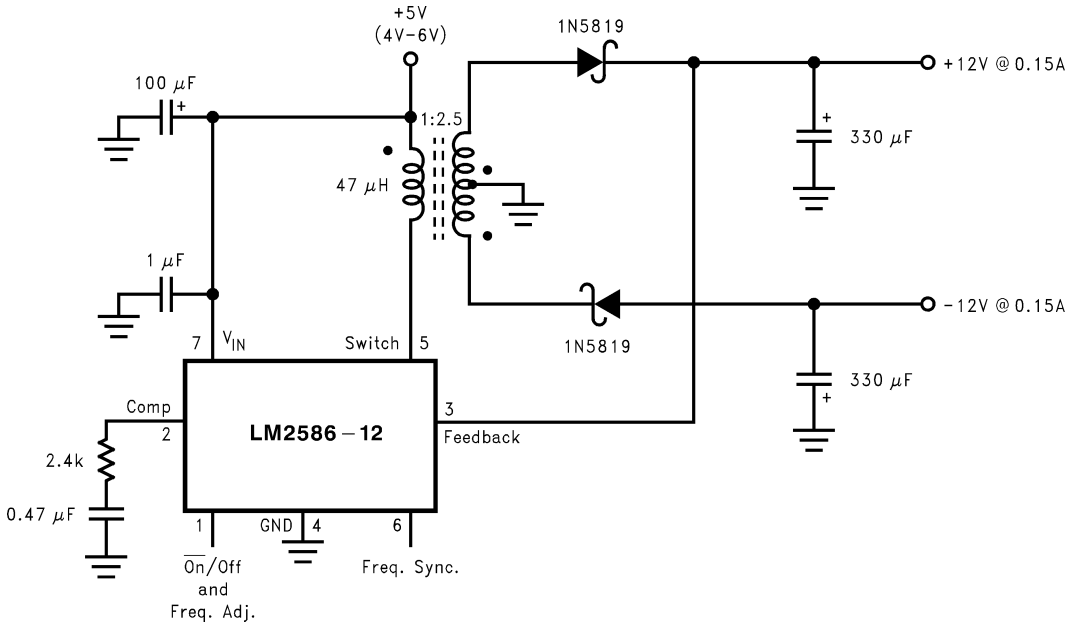

(1) As shown in Figure 17, the LM2585 can be used as a flyback regulator by using a minimum number of external components. The switching waveforms of this regulator are shown in Figure 18. Typical characteristics observed during the operation of this circuit are shown in Figure 19.

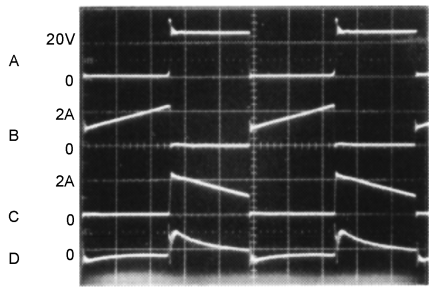

A: Switch Voltage, 20 V/div
B: Switch Current, 2 A/div
C: Output Rectifier Current, 2 A/div
D: Output Ripple Voltage, 50 mV/div
AC-Coupled
Horizontal: 2 μs/div

Figure 18. Switching Waveforms

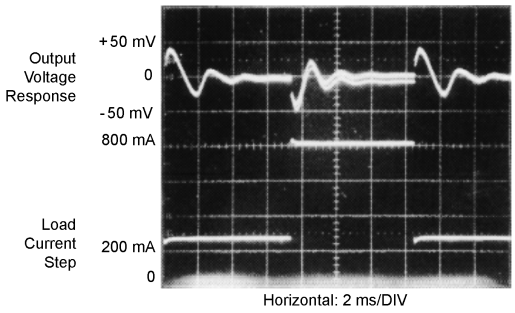

Figure 19. V_{OUT} Load Current Step Response

Feature Description (continued)

7.3.2 Step-Up (Boost) Regulator Operation

Figure 20 shows the LM2586 used as a step-up (boost) regulator. This is a switching regulator that produces an output voltage greater than the input supply voltage.

A brief explanation of how the LM2586 boost regulator works is as follows (refer to Figure 20). When the NPN switch turns on, the inductor current ramps up at the rate of V_{IN}/L, storing energy in the inductor. When the switch turns off, the lower end of the inductor flies above V_{IN}, discharging its current through diode (D) into the output capacitor (C_{OUT}) at a rate of $(V_{OUT} - V_{IN})/L$. Thus, energy stored in the inductor during the switch on time is transferred to the output during the switch off time. The output voltage is controlled by adjusting the peak switch current, as described in .

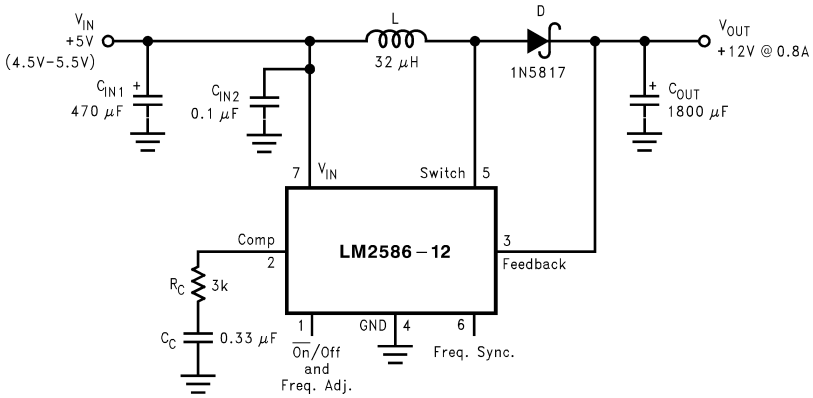

Figure 20. 12-V Boost Regulator

By adding a small number of external components (as shown in Figure 20), the LM2586 can be used to produce a regulated output voltage that is greater than the applied input voltage. The switching waveforms observed during the operation of this circuit are shown in Figure 21. Typical performance of this regulator is shown in Figure 22.

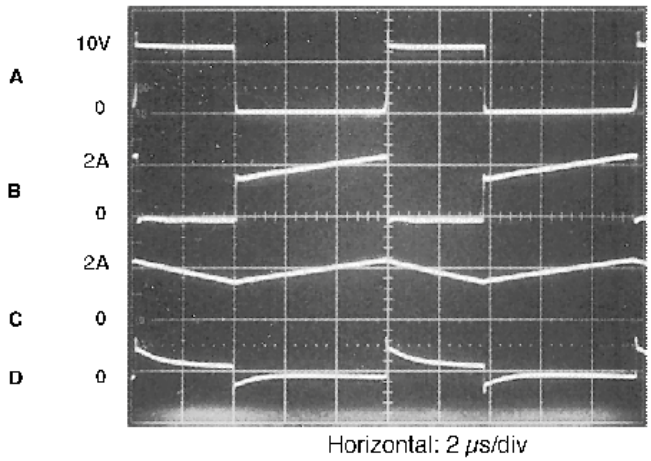

A: Switch Voltage,10V/div
B: Switch Current, 2A/div
C: Inductor Current, 2A/div
D: Output Ripple Voltage,100 mV/div, AC-Coupled

Figure 21. Switching Waveforms

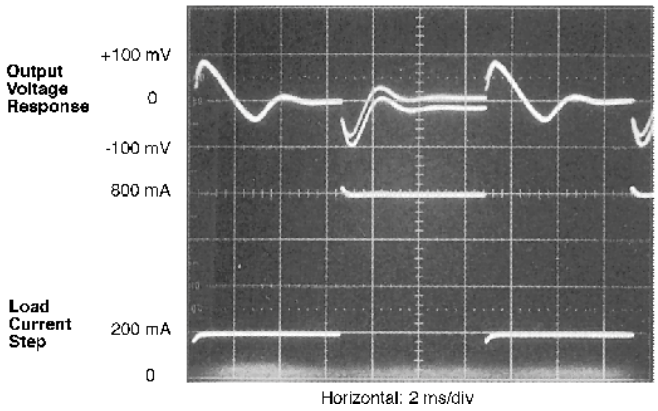

Figure 22. V_{OUT} Response To Load Current Step

Copyright © 1996–2019, Texas Instruments Incorporated

Feature Description (continued)

7.3.3 Programming Output Voltage (Selecting R1 And R2)

Referring to the adjustable regulator in Figure 26, the output voltage is programmed by the resistors R1 and R2 by the following formula:

$V_{OUT} = V_{REF} (1 + R1/R2)$

where

- $V_{REF} = 1.23V$ (1)

Resistors R1 and R2 divide the output voltage down so that it can be compared with the 1.23V internal reference. With R2 between 1k and 5k, R1 is:

$R1 = R2 (V_{OUT}/V_{REF} - 1)$

where

- $V_{REF} = 1.23V$ (2)

For best temperature coefficient and stability with time, use 1% metal film resistors.

7.3.4 Shutdown Control

A feature of the LM2586 is its ability to be shut down using the $\overline{ON}$ /OFF pin (pin 1). This feature conserves input power by turning off the device when it is not in use. For proper operation, an isolation diode is required (as shown in Figure 23).

The device will shut down when 3V or greater is applied on the $\overline{ON}$ /OFF pin, sourcing current into pin 1. In shut down mode, the device will draw typically 56 μA of supply current (16 μA to V_{IN} and 40 μA to the $\overline{ON}$ /OFF pin). To turn the device back on, leave pin 1 floating, using an (isolation) diode, as shown in Figure 23 (for normal operation, do not source or sink current to or from this pin—see the next section).

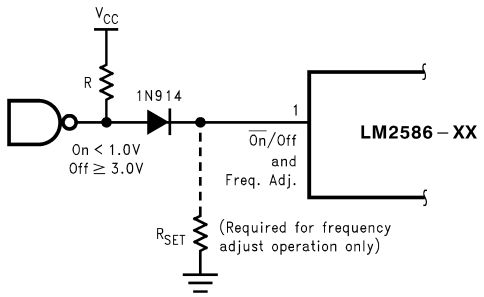

Figure 23. Shutdown Operation

7.3.5 Frequency Adjustment

The switching frequency of the LM2586 can be adjusted with the use of an external resistor. This feature allows the user to optimize the size of the magnetics and the output capacitor(s) by tailoring the operating frequency. A resistor connected from pin 1 (the Freq. Adj. pin) to ground will set the switching frequency from 100 kHz to 200 kHz (maximum). As shown in Figure 23, the pin can be used to adjust the frequency while still providing the shutdown function. A curve in *Typical Characteristics* the resistor value to the corresponding switching frequency. Table 1 shows resistor values corresponding to commonly used frequencies.

However, changing the LM2586 operating frequency from its nominal value of 100 kHz changes the magnetics selection and compensation component values.

Table 1. Frequency Setting Resistor Guide

R_{SET}(kΩ)	Frequency (kHz)
Open	100
200	125
47	150
33	175

Feature Description (continued)

Table 1. Frequency Setting Resistor Guide (continued)

R_{SET}(kΩ)	Frequency (kHz)
22	200

7.3.6 Frequency Synchronization

Another feature of the LM2586 is the ability to synchronize the switching frequency to an external source, using the sync pin (pin 6). This feature allows the user to parallel multiple devices to deliver more output power.

A negative falling pulse applied to the sync pin will synchronize the LM2586 to an external oscillator (see Figure 24 and Figure 25).

Use of this feature enables the LM2586 to be synchronized to an external oscillator, such as a system clock. This operation allows multiple power supplies to operate at the same frequency, thus eliminating frequency-related noise problems.

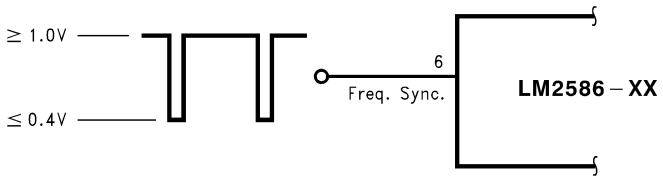

Figure 24. Frequency Synchronization

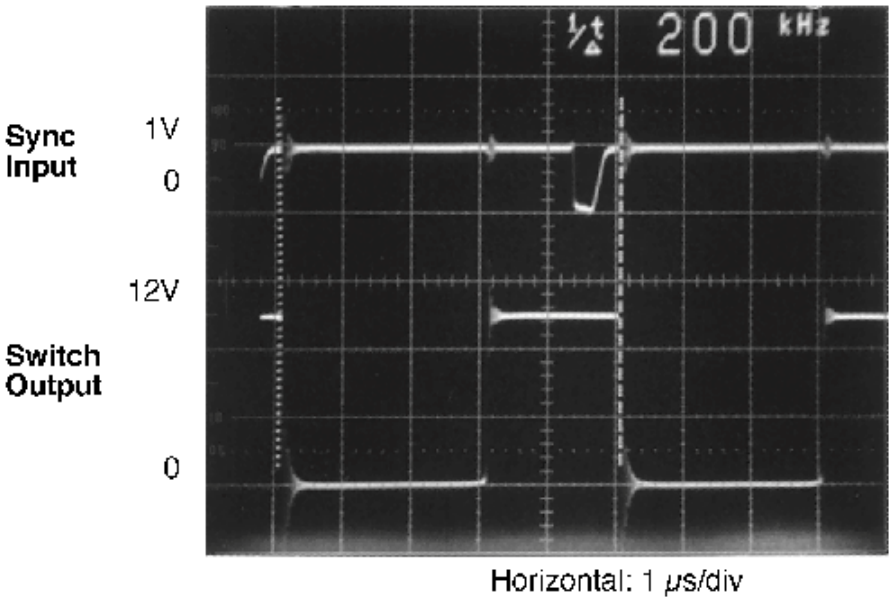

Figure 25. Waveforms of a Synchronized 12-V Boost Regulator

The scope photo in Figure 25 shows a LM2586 12-V boost regulator synchronized to a 200-kHz signal. There is a 700-ns delay between the falling edge of the sync signal and the turning on of the switch.

Copyright © 1996–2019, Texas Instruments Incorporated

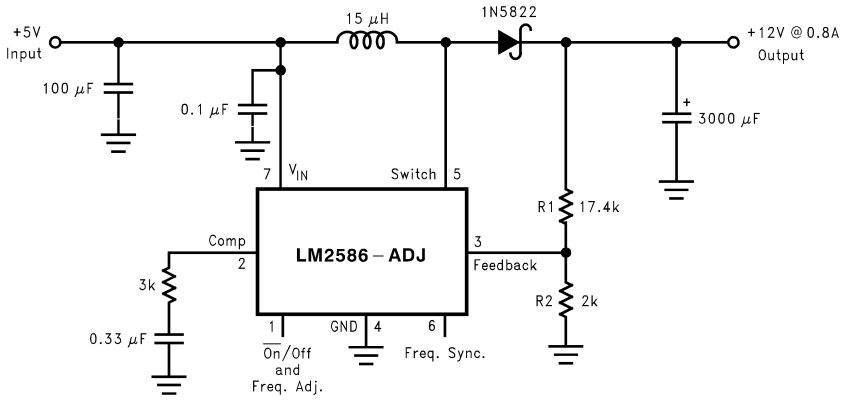

Figure 26. Boost Regulator

8 Application and Implementation

NOTE

Information in the following applications sections is not part of the TI component specification, and TI does not warrant its accuracy or completeness. TI's customers are responsible for determining suitability of components for their purposes. Customers should validate and test their design implementation to confirm system functionality.

8.1 Application Information

The LM2586 series of regulators are monolithic integrated circuits specifically designed for flyback, step-up (boost), and forward converter applications. Requiring a minimum number of external components, these regulators are cost effective, and simple to use. Included in the datasheet are typical circuits of boost and flyback regulators. Also listed are selector guides for diodes and capacitors and a family of standard inductors and flyback transformers designed to work with these switching regulators.

8.2 Typical Applications

8.2.1 Typical Flyback Regulator Applications

Figure 27 through Figure 32 show six typical flyback applications, varying from single output to triple output. Each drawing contains the part number(s) and manufacturer(s) for every component except the transformer. For the transformer part numbers and manufacturers' names, see Table 2. For applications with different output voltages—requiring the LM2586-ADJ—or different output configurations that do not match the standard configurations, refer to the ***Switchers Made Simple*** software.

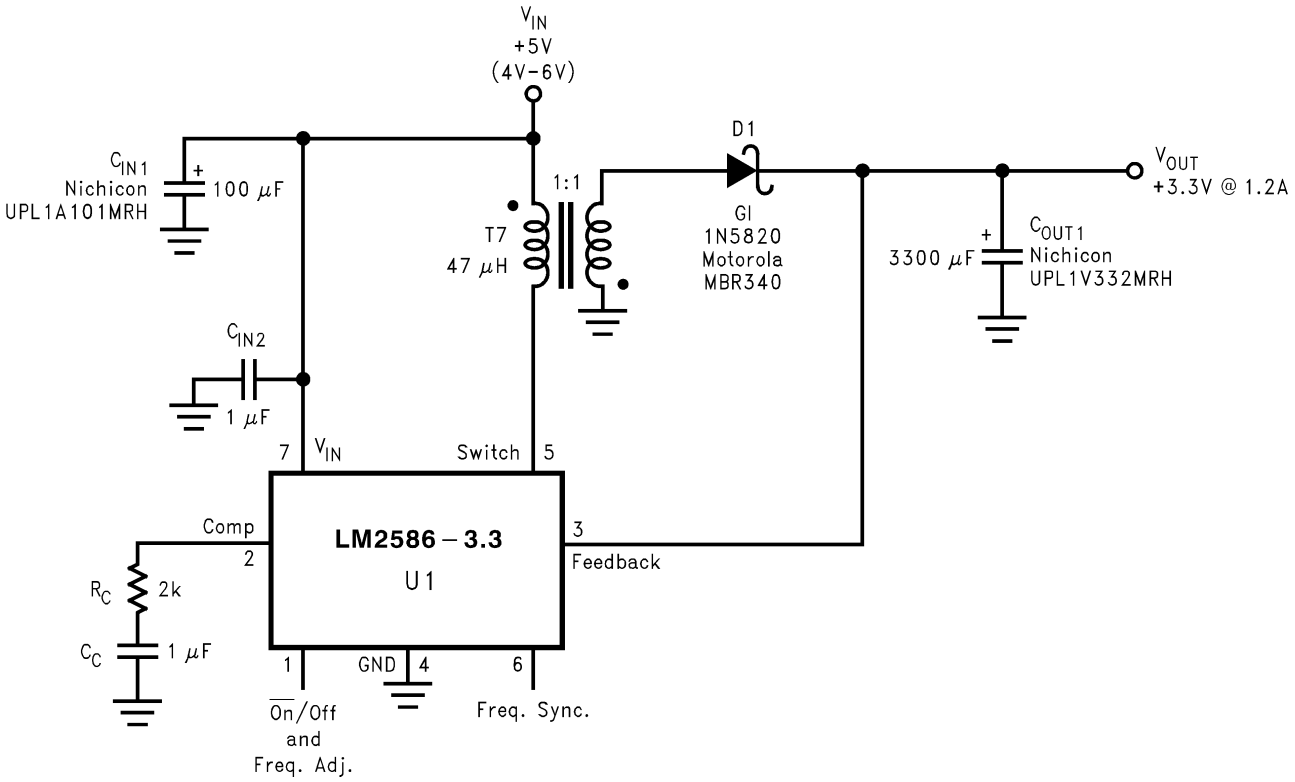

Figure 27. Single-Output Flyback Regulator

Copyright © 1996–2019, Texas Instruments Incorporated

Typical Applications (continued)

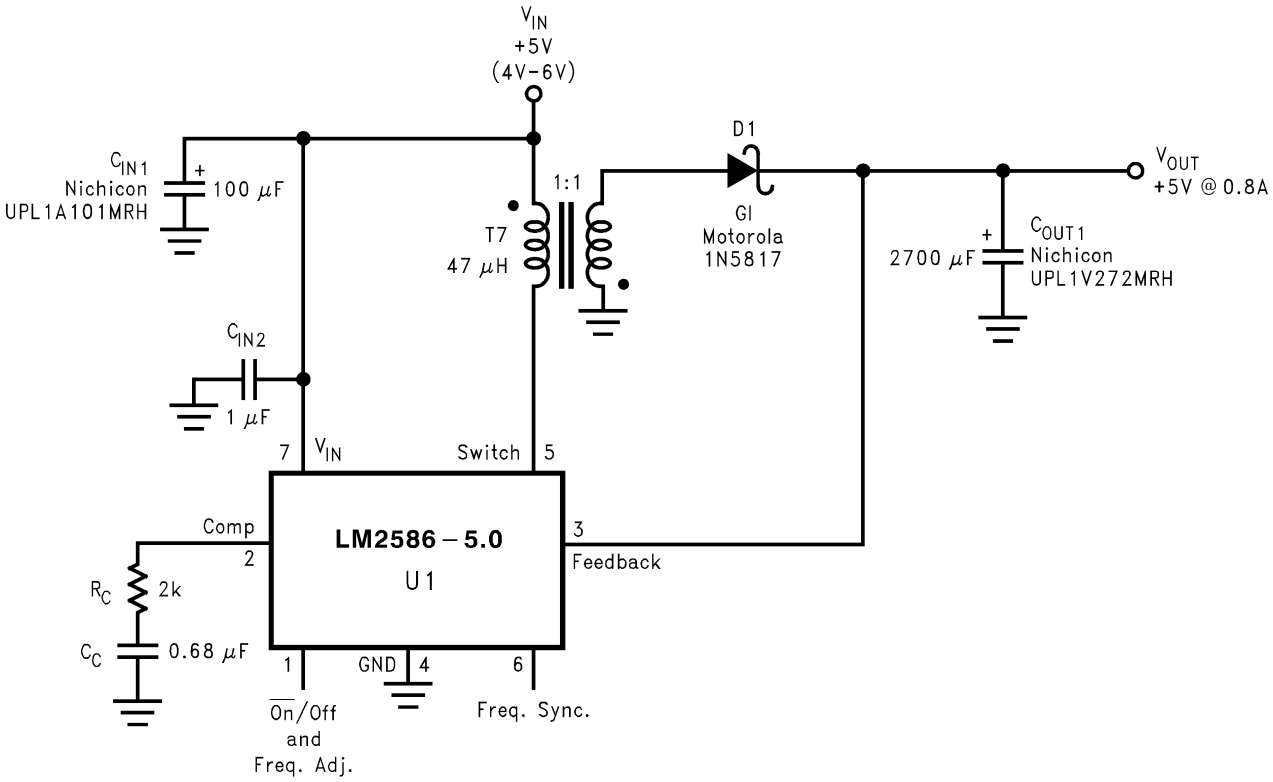

Figure 28. Single-Output Flyback Regulator

Typical Applications (continued)

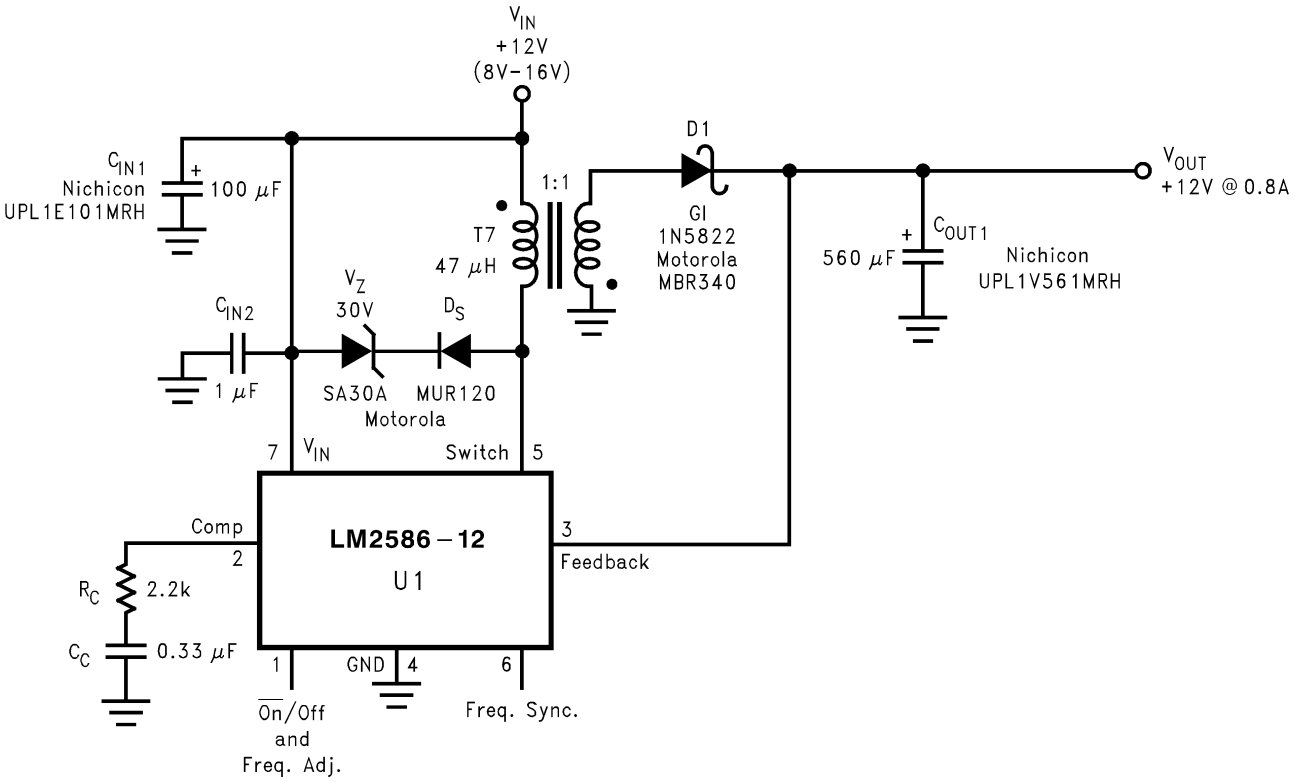

Figure 29. Single-Output Flyback Regulator

Copyright © 1996–2019, Texas Instruments Incorporated

Typical Applications (continued)

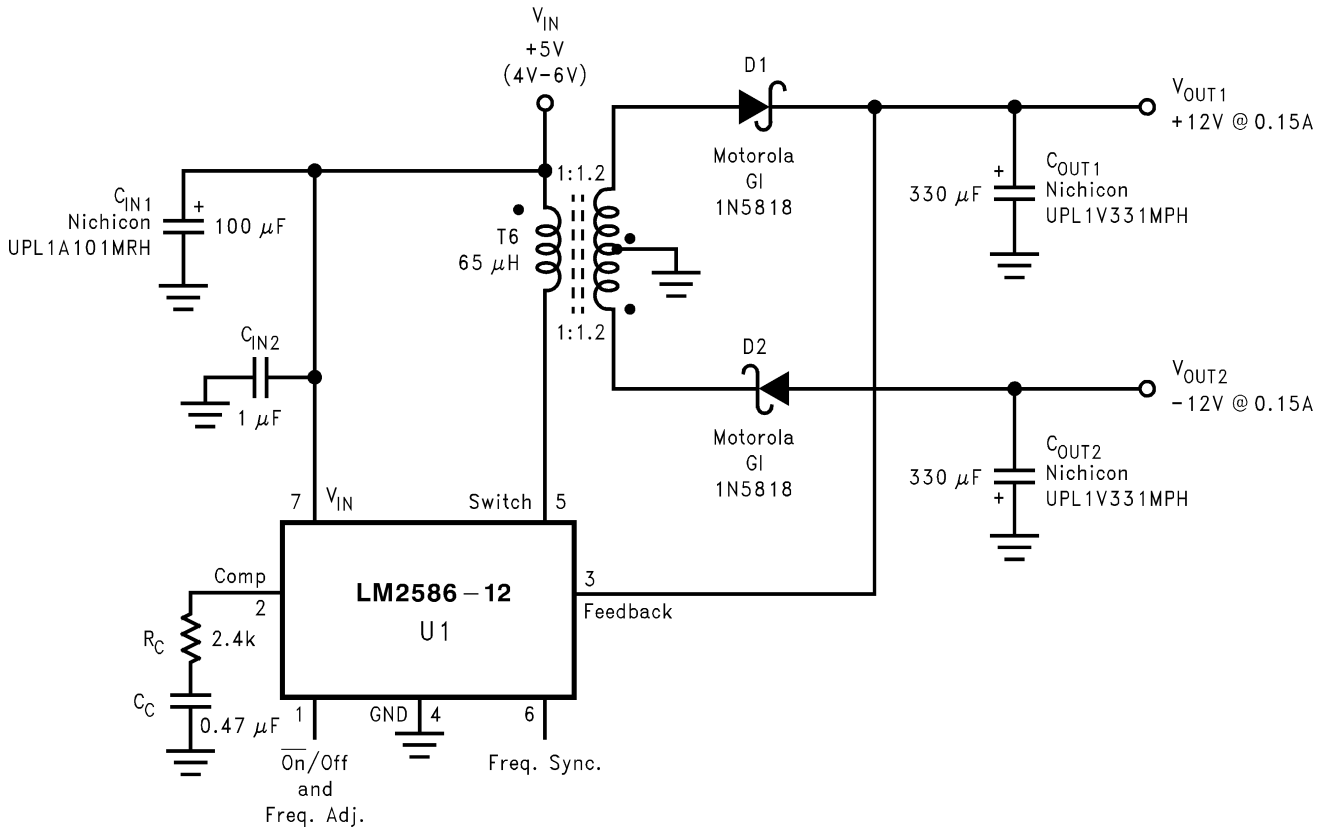

Figure 30. Dual-Output Flyback Regulator

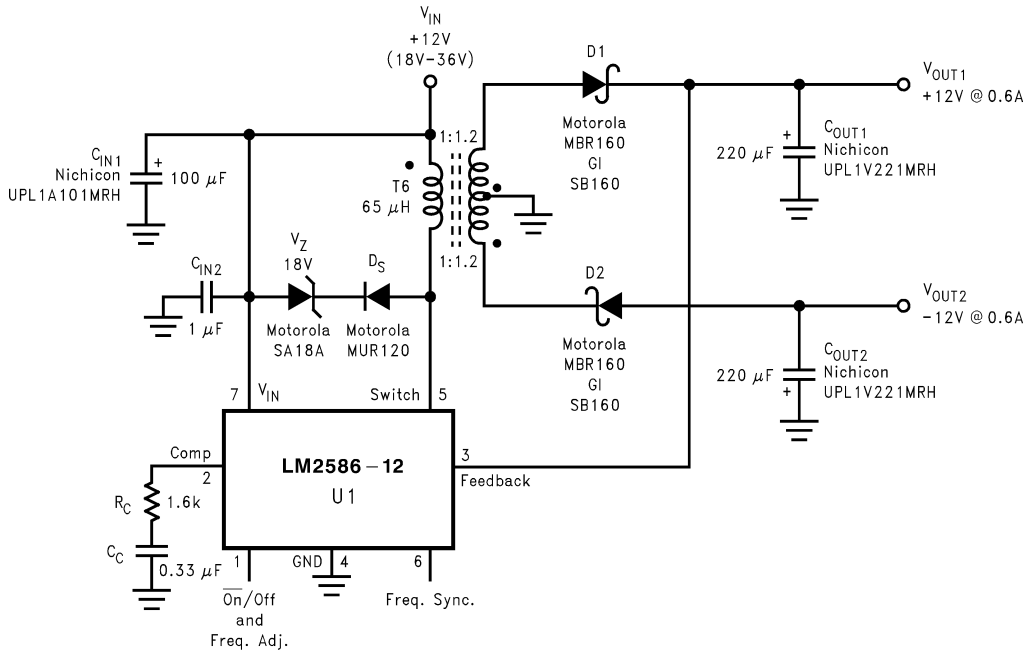

Figure 31. Dual-Output Flyback Regulator

Typical Applications (continued)

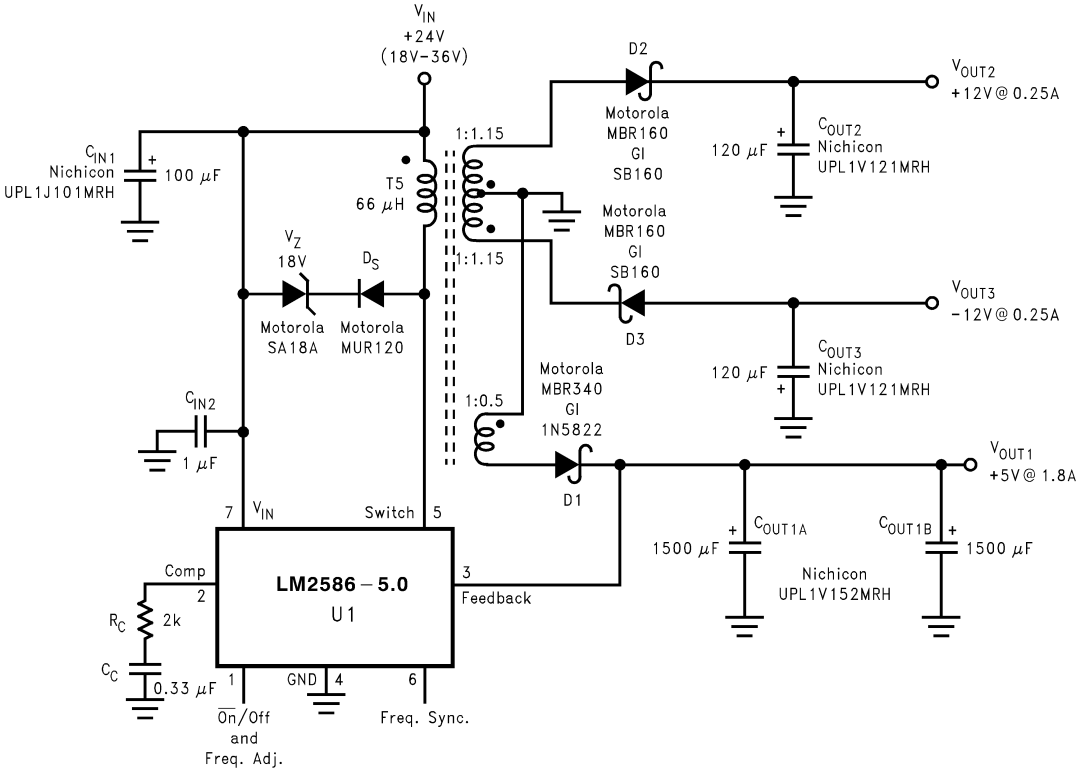

Figure 32. Triple-Output Flyback Regulator

8.2.1.1 Design Requirements

8.2.1.1.1 Transformer Selection (T)

Table 2 lists the standard transformers available for flyback regulator applications. Included in the table are the turns ratio(s) for each transformer, as well as the output voltages, input voltage ranges, and the maximum load currents for each circuit.

Table 2. Transformer Selection Table

Applications	Figure 27	Figure 28	Figure 29	Figure 30	Figure 31	Figure 32
Transformers	**T7**	**T7**	**T7**	**T6**	**T6**	**T5**
V_{IN}	4V–6V	4V–6V	8V–16V	4V–6V	18V–36V	18V–36V
V_{OUT1}	3.3V	5V	12V	12V	12V	5V
I_{OUT1} (Max)	1.4A	1A	0.8A	0.15A	0.6A	1.8A
N_1	1	1	1	1.2	1.2	0.5
V_{OUT2}				−12V	−12V	12V
I_{OUT2}(Max)				0.15A	0.6A	0.25A
N_2				1.2	1.2	1.15
V_{OUT3}						−12V
I_{OUT3} (Max)						0.25A
N_3						1.15

Copyright © 1996–2019, Texas Instruments Incorporated

Table 3. Transformer Manufacturer Guide

Transformer Type	Manufacturers' Part Numbers					
	Coilcraft (1)	Coilcraft (1) Surface Mount	Pulse (2) Surface Mount	Pulse (2)	Renco (3)	Schott (4)
T5	Q4338-B	Q4437-B	PE-68413	—	RL-5532	67140890
T6	Q4339-B	Q4438-B	PE-68414	—	RL-5533	67140900
T7	S6000-A	S6057-A	—	PE-68482	RL-5751	26606

(1) Coilcraft Inc., Phone: (800) 322-2645
1102 Silver Lake Road, Cary, IL 60013 Fax: (708) 639-1469
European Headquarters, 21 Napier Place Phone: +44 1236 730 595
Wardpark North, Cumbernauld, Scotland G68 0LL Fax: +44 1236 730 627
(2) Pulse Engineering Inc., Phone: (619) 674-8100
12220 World Trade Drive, San Diego, CA 92128 Fax: (619) 674 -8262
European Headquarters, Dunmore Road Phone: +353 93 24 107
Tuam, Co. Galway, Ireland Fax: +353 93 24 459
(3) Renco Electronics Inc., Phone: (800) 645-5828
60 Jeffryn Blvd. East, Deer Park, NY 11729 Fax: (516) 586-5562
(4) Schott Corp., Phone: (612) 475-1173
1000 Parkers Lane Road, Wayzata, MN 55391 Fax: (612) 475-1786

8.2.1.1.2 Transformer Footprints

Figure 33 through Figure 47 show the footprints of each transformer, listed in Table 3.

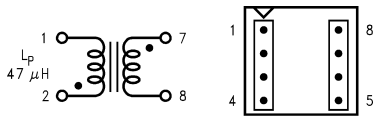

Figure 33. Coilcraft S6000-A (Top View)

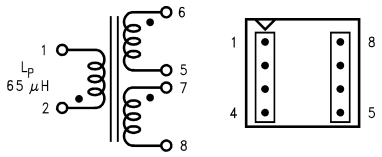

Figure 34. Coilcraft Q4339-B (Top View)

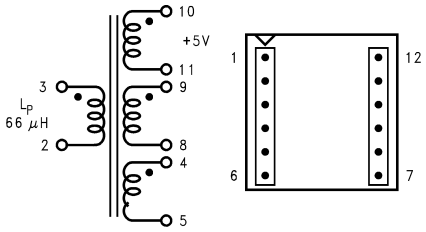

Figure 35. Coilcraft Q4437-B (Surface Mount) (Top View)

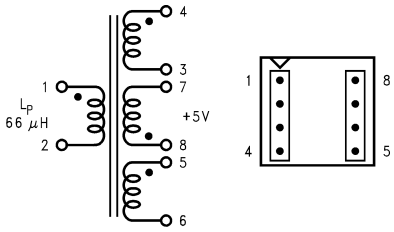

Figure 36. Coilcraft Q4338-B (Top View)

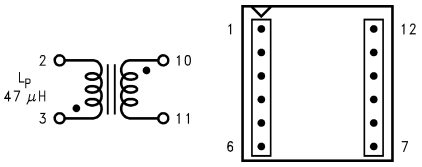

Figure 37. Coilcraft S6057-A (Surface Mount) (Top View)

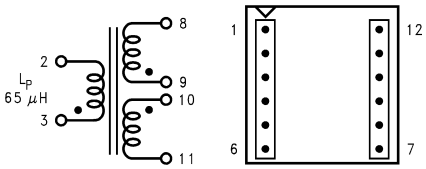

Figure 38. Coilcraft Q4438-B (Surface Mount) (Top View)

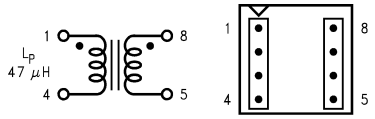

Figure 39. Pulse PE-68482 (Top View)

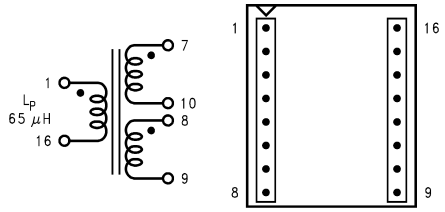

Figure 40. Pulse PE-68414 (Surface Mount) (Top View)

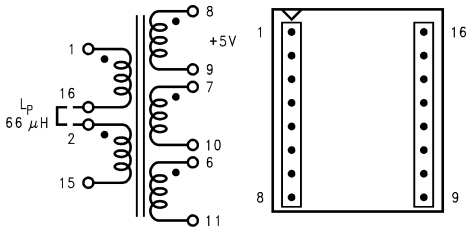

Figure 41. Pulse PE-68413 (Surface Mount) (Top View)

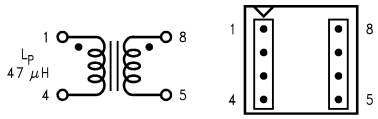

Figure 42. Renco RI-5751 (Top View)

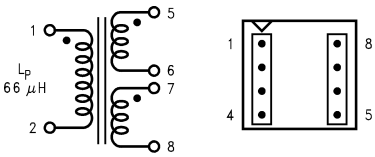

Figure 43. Renco RI-5533 (Top View)

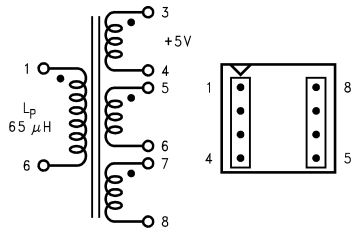

Figure 44. Renco RI-5532 (Top View)

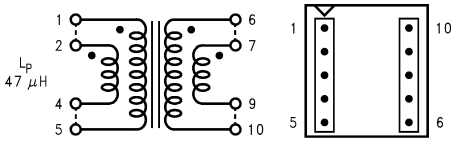

Figure 45. Schott 26606 (Top View)

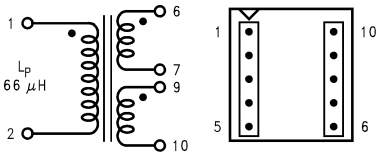

Figure 46. Schott 67140900 (Top View)

Copyright © 1996–2019, Texas Instruments Incorporated

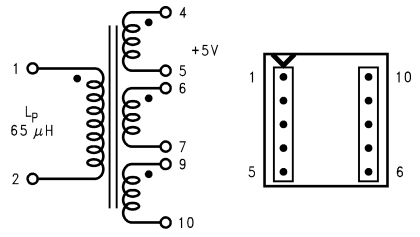

Figure 47. Schott 67140890 (Top View)

8.2.1.2 Detailed Design Procedure

8.2.1.2.1 Custom Design With WEBENCH® Tools

Click here to create a custom design using the LM2586 device with the WEBENCH® Power Designer.

1. Start by entering the input voltage (V_{IN}), output voltage (V_{OUT}), and output current (I_{OUT}) requirements.
2. Optimize the design for key parameters such as efficiency, footprint, and cost using the optimizer dial.
3. Compare the generated design with other possible solutions from Texas Instruments.

The WEBENCH Power Designer provides a customized schematic along with a list of materials with real-time pricing and component availability.

In most cases, these actions are available:

- Run electrical simulations to see important waveforms and circuit performance
- Run thermal simulations to understand board thermal performance
- Export customized schematic and layout into popular CAD formats
- Print PDF reports for the design, and share the design with colleagues

Get more information about WEBENCH tools at www.ti.com/WEBENCH.

8.2.1.2.2 Flyback Regulator Input Capacitors

A flyback regulator draws discontinuous pulses of current from the input supply. Therefore, there are two input capacitors needed in a flyback regulator—one for energy storage and one for filtering (see Figure 48). Both are required due to the inherent operation of a flyback regulator. To keep a stable or constant voltage supply to the LM2586, a storage capacitor (≥100 μF) is required. If the input source is a rectified DC supply and/or the application has a wide temperature range, the required rms current rating of the capacitor might be very large. This means a larger value of capacitance or a higher voltage rating will be needed for the input capacitor. The storage capacitor will also attenuate noise which may interfere with other circuits connected to the same input supply voltage.

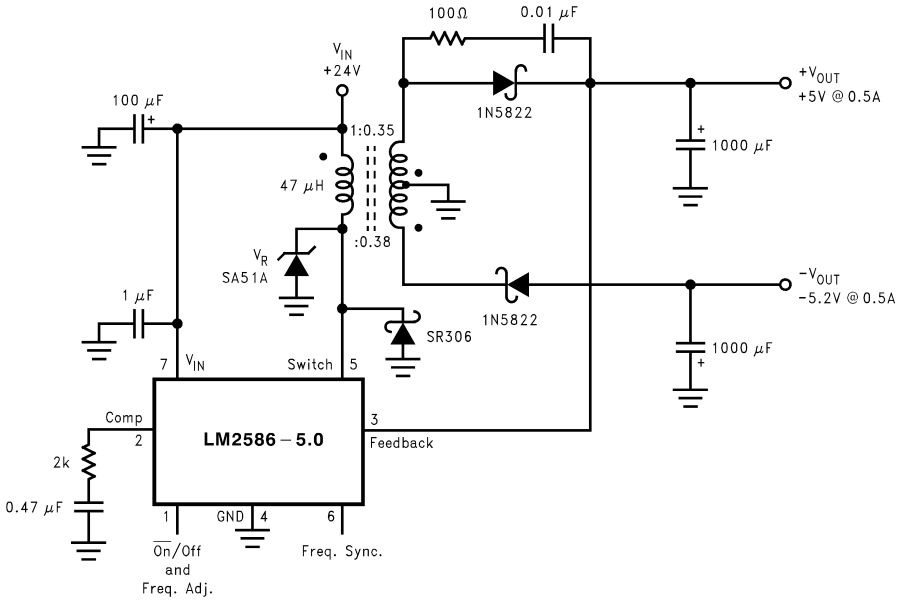

Figure 48. Flyback Regulator

In addition, a small bypass capacitor is required due to the noise generated by the input current pulses. To eliminate the noise, insert a 1-μF ceramic capacitor between V_{IN} and ground as close as possible to the device.

8.2.1.2.3 Switch Voltage Limits

In a flyback regulator, the maximum steady-state voltage appearing at the switch, when it is off, is set by the transformer turns ratio, N, the output voltage, V_{OUT}, and the maximum input voltage, V_{IN} (maximum):

$$V_{SW(OFF)} = V_{IN}\ (\text{maximum}) + (V_{OUT} + V_F)/N \quad (3)$$

where

- V_F is the forward biased voltage of the output diode, and is typically 0.5 V for Schottky diodes and 0.8 V for ultra-fast recovery diodes

In certain circuits, there exists a voltage spike, V_{LL}, superimposed on top of the steady-state voltage (see , waveform A). Usually, this voltage spike is caused by the transformer leakage inductance and/or the output rectifier recovery time. To “clamp” the voltage at the switch from exceeding its maximum value, a transient suppressor in series with a diode is inserted across the transformer primary (as shown in the circuit in Figure 16 and other flyback regulator circuits throughout the datasheet). The schematic in Figure 48 shows another method of clamping the switch voltage. A single voltage transient suppressor (the SA51A) is inserted at the switch pin. This method clamps the total voltage across the switch, not just the voltage across the primary.

If poor circuit layout techniques are used (see the *Circuit Layout Guideline* section), negative voltage transients may appear on the Switch pin (pin 5). Applying a negative voltage (with respect to the IC's ground) to any monolithic IC pin causes erratic and unpredictable operation of that IC. This holds true for the LM2586 IC as well. When used in a flyback regulator, the voltage at the Switch pin (pin 5) can go negative when the switch turns on. The “ringing” voltage at the switch pin is caused by the output diode capacitance and the transformer leakage inductance forming a resonant circuit at the secondary(ies). The resonant circuit generates the “ringing” voltage, which gets reflected back through the transformer to the switch pin. There are two common methods to avoid this problem. One is to add an RC snubber around the output rectifier(s), as in Figure 48. The values of the resistor and the capacitor must be chosen so that the voltage at the Switch pin does not drop below −0.4 V. The resistor may range in value between 10Ω and 1 kΩ, and the capacitor will vary from 0.001 μF to 0.1 μF. Adding a snubber will (slightly) reduce the efficiency of the overall circuit.

The other method to reduce or eliminate the “ringing” is to insert a Schottky diode clamp between pins 5 and 4 (ground), also shown in Figure 48. This prevents the voltage at pin 5 from dropping below −0.4 V. The reverse voltage rating of the diode must be greater than the switch off voltage.

Copyright © 1996–2019, Texas Instruments Incorporated

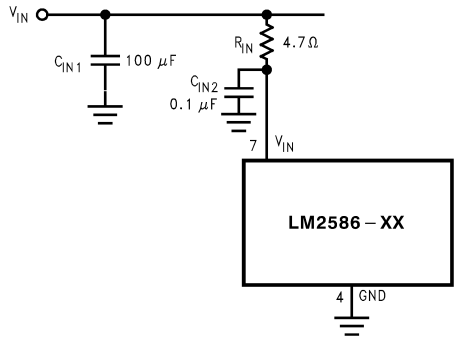

Figure 49. Input Line Filter

8.2.1.2.4 Output Voltage Limitations

The maximum output voltage of a boost regulator is the maximum switch voltage minus a diode drop. In a flyback regulator, the maximum output voltage is determined by the turns ratio, N, and the duty cycle, D, by the equation:

$$V_{OUT} \approx N \times V_{IN} \times D/(1 - D) \tag{4}$$

The duty cycle of a flyback regulator is determined by Equation 5:

$$D = \frac{V_{OUT} + V_F}{N(V_{IN} - V_{SAT}) + V_{OUT} + V_F} \approx \frac{V_{OUT}}{N(V_{IN}) + V_{OUT}} \tag{5}$$

Theoretically, the maximum output voltage can be as large as desired—just keep increasing the turns ratio of the transformer. However, there exists some physical limitations that prevent the turns ratio, and thus the output voltage, from increasing to infinity. The physical limitations are capacitances and inductances in the LM2586 switch, the output diode(s), and the transformer—such as reverse recovery time of the output diode (mentioned above).

8.2.1.2.5 Noisy Input Line Condition

A small, low-pass RC filter should be used at the input pin of the LM2586 if the input voltage has an unusually large amount of transient noise, such as with an input switch that bounces. The circuit in Figure 49 demonstrates the layout of the filter, with the capacitor placed from the input pin to ground and the resistor placed between the input supply and the input pin. Note that the values of R_{IN} and C_{IN} shown in the schematic are good enough for most applications, but some readjusting might be required for a particular application. If efficiency is a major concern, replace the resistor with a small inductor (say 10 µH and rated at 200 mA).

8.2.1.2.6 Stability

All current-mode controlled regulators can suffer from an instability, known as subharmonic oscillation, if they operate with a duty cycle above 50%. To eliminate subharmonic oscillations, a minimum value of inductance is required to ensure stability for all boost and flyback regulators. The minimum inductance is given by:

$$L(Min) = \frac{2.92\,[(V_{IN}(Min) - V_{SAT}) \bullet (2D(Max) - 1)]}{1 - D(Max)}\ (\mu H)$$

where

- V_{SAT} is the switch saturation voltage and can be found in the Characteristic Curves (6)

8.2.2 Typical Boost Regulator Applications

Figure 50 through Figure 53 show four typical boost applications—one fixed and three using the adjustable version of the LM2586. Each drawing contains the part number(s) and manufacturer(s) for every component. For the fixed 12-V output application, the part numbers and manufacturers' names for the inductor are listed in Table 4. For applications with different output voltages, refer to the ***Switchers Made Simple*** software.

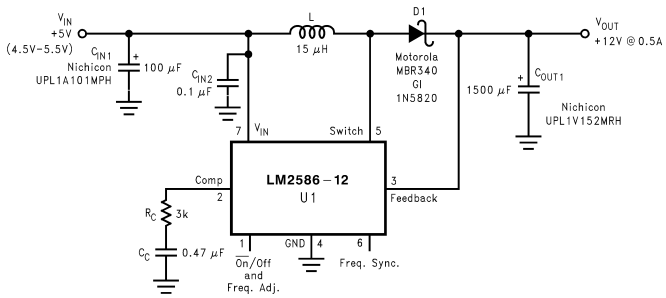

Figure 50. 5-V to 12-V Boost Regulator

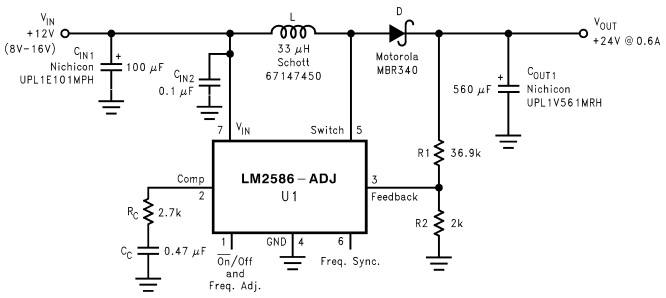

Figure 51. 12-V to 24-V Boost Regulator

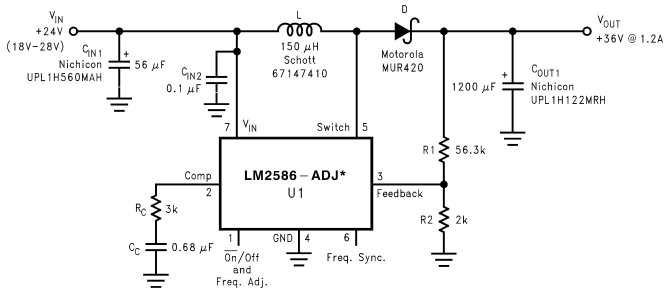

The LM2586 requires a heat sink in this application. The size of the heat sink depends on the maximum ambient temperature. To calculate the thermal resistance of the IC and the size of the heat sink needed, see *Heat Sink/Thermal Considerations*.

Figure 52. 24-V to 36-V Boost Regulator

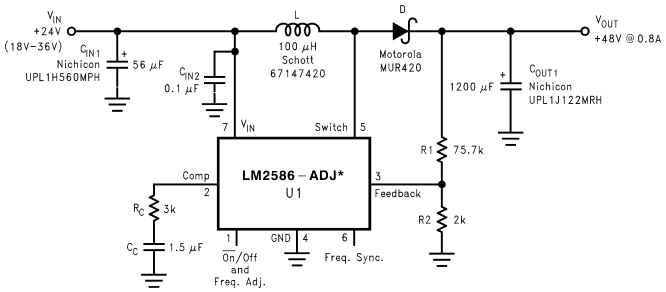

The LM2586 requires a heat sink in this application. The size of the heat sink depends on the maximum ambient temperature. To calculate the thermal resistance of the IC and the size of the heat sink needed, see *Heat Sink/Thermal Considerations*.

Figure 53. 24-V to 48-V Boost Regulator

8.2.2.1 Design Requirements

Table 4 contains a list of standard inductors, by part number and corresponding manufacturer, for the fixed output regulator of Figure 50.

Table 4. Inductor Selection Table

Coilcraft(1)	Pulse(2)	Renco(3)	Schott(4)	Schott(4) (Surface Mount)
DO3316-153	PE-53898	RL-5471-7	67146510	67146540

(1) Coilcraft Inc., Phone: (800) 322-2645
1102 Silver Lake Road, Cary, IL 60013 Fax: (708) 639-1469
European Headquarters, 21 Napier Place Phone: +44 1236 730 595
Wardpark North, Cumbernauld, Scotland G68 0LL Fax: +44 1236 730 627
(2) Pulse Engineering Inc., Phone: (619) 674-8100
12220 World Trade Drive, San Diego, CA 92128 Fax: (619) 674 -8262
European Headquarters, Dunmore Road Phone: +353 93 24 107
Tuam, Co. Galway, Ireland Fax: +353 93 24 459
(3) Renco Electronics Inc., Phone: (800) 645-5828
60 Jeffryn Blvd. East, Deer Park, NY 11729 Fax: (516) 586-5562
(4) Schott Corp., Phone: (612) 475-1173
1000 Parkers Lane Road, Wayzata, MN 55391 Fax: (612) 475-1786

Copyright © 1996–2019, Texas Instruments Incorporated

8.2.2.2 Detailed Design Procedure

See *Detailed Design Procedure*

8.3 System Examples

8.3.1 Test Circuits

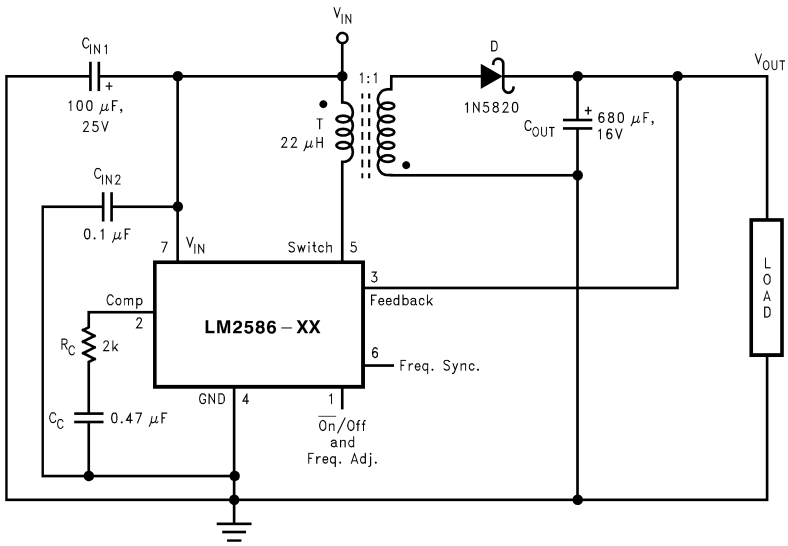

C_{IN1}—100 µF, 25V Aluminum Electrolytic
C_{IN2}—0.1 µF Ceramic
T—22 µH, 1:1 Schott #67141450
D—1N5820
C_{OUT}—680 µF, 16V Aluminum Electrolytic
C_C—0.47 µF Ceramic
R_C—2k

Figure 54. 3.3-V LM2586 and 5-V LM2586

System Examples (continued)

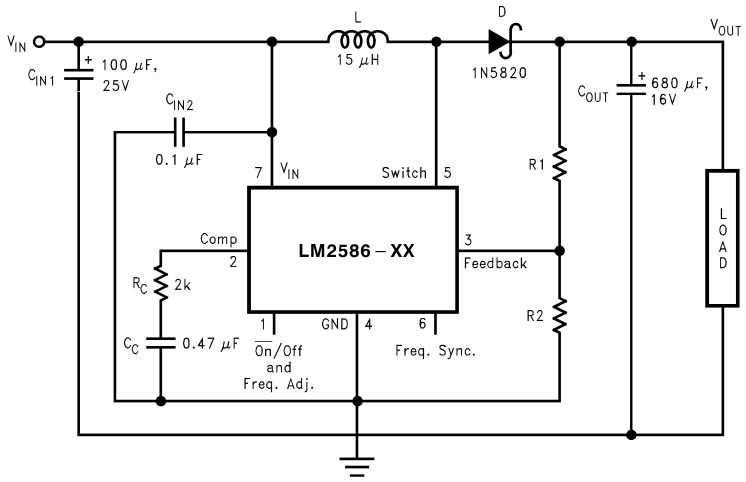

C_{IN1}—100 µF, 25V Aluminum Electrolytic
C_{IN2}—0.1 µF Ceramic
L—15 µH, Renco #RL-5472-5
D—1N5820
C_{OUT}—680 µF, 16V Aluminum Electrolytic
C_C—0.47 µF Ceramic
R_C—2k
For 12V Devices: R1 = Short (0Ω) and 2 = Open
For ADJ Devices: R1 = 48.75k, ±0.1% and 2 = 5.62k, ±0.1%

Figure 55. LM2586-12 and LM2586-ADJ

Copyright © 1996–2019, Texas Instruments Incorporated

9 Layout

9.1 Layout Guidelines

As in any switching regulator, layout is very important. Rapidly switching currents associated with wiring inductance generate voltage transients which can cause problems. For minimal inductance and ground loops, keep the length of the leads and traces as short as possible. Use single point grounding or ground plane construction for best results. Separate the signal grounds from the power grounds (as indicated in Figure 56). When using the adjustable version, physically locate the programming resistors as close as possible to the regulator IC, to keep the sensitive feedback wiring short.

9.2 Layout Example

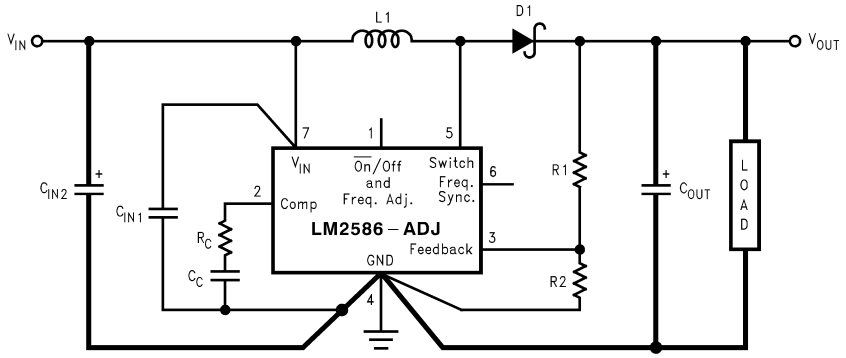

Figure 56. Circuit Board Layout

9.3 Heat Sink/Thermal Considerations

In many cases, a heat sink is not required to keep the LM2586 junction temperature within the allowed operating temperature range. For each application, to determine whether or not a heat sink will be required, the following must be identified:

1) Maximum ambient temperature (in the application).

2) Maximum regulator power dissipation (in the application).

3) Maximum allowed junction temperature (125°C for the LM2586). For a safe, conservative design, a temperature approximately 15°C cooler than the maximum junction temperature should be selected (110°C).

4) LM2586 package thermal resistances θ_{JA} and θ_{JC} (given in the Electrical Characteristics).

Total power dissipated (P_D) by the LM2586 can be estimated as follows:

Boost:

$$P_D = 0.15\Omega \bullet \left(\frac{I_{LOAD}}{1-D}\right)^2 \bullet D + \frac{I_{LOAD}}{50 \bullet (1-D)} \bullet D \bullet V_{IN}$$

Flyback:

$$P_D = 0.15\Omega \bullet \left(\frac{N \bullet \Sigma I_{LOAD}}{1-D}\right)^2 \bullet D + \frac{N \bullet \Sigma I_{LOAD}}{50 \bullet (1-D)} \bullet D \bullet V_{IN} \quad (7)$$

where

- V_{IN} is the minimum input voltage
- V_{OUT} is the output voltage
- N is the transformer turns ratio, D is the duty cycle
- I_{LOAD} is the maximum load current (and $\sum I_{LOAD}$ is the sum of the maximum load currents for multiple-output flyback regulators)

The duty cycle is given by:

Heat Sink/Thermal Considerations (continued)

Boost:

$$D = \frac{V_{OUT} + V_F - V_{IN}}{V_{OUT} + V_F - V_{SAT}} \approx \frac{V_{OUT} - V_{IN}}{V_{OUT}}$$

Flyback:

$$D = \frac{V_{OUT} + V_F}{N(V_{IN} - V_{SAT}) + V_{OUT} + V_F} \approx \frac{V_{OUT}}{N(V_{IN}) + V_{OUT}}$$

where

- V_F is the forward biased voltage of the diode and is typically 0.5 V for Schottky diodes and 0.8 V for fast recovery diodes
- V_{SAT} is the switch saturation voltage and can be found in the Characteristic Curves (8)

When no heat sink is used, the junction temperature rise is:

$$\Delta T_J = P_D \bullet \theta_{JA}. \quad (9)$$

Adding the junction temperature rise to the maximum ambient temperature gives the actual operating junction temperature:

$$T_J = \Delta T_J + T_A. \quad (10)$$

If the operating junction temperature exceeds the maximum junction temperature in item 3 above, then a heat sink is required. When using a heat sink, the junction temperature rise can be determined by the following:

$$\Delta T_J = P_D \bullet (\theta_{JC} + \theta_{Interface} + \theta_{Heat\ Sink}) \quad (11)$$

Again, the operating junction temperature will be:

$$T_J = \Delta T_J + T_A \quad (12)$$

As before, if the maximum junction temperature is exceeded, a larger heat sink is required (one that has a lower thermal resistance).

Included in the ***Switchers Made Simple***® design software is a more precise (non-linear) thermal model that can be used to determine junction temperature with different input-output parameters or different component values. It can also calculate the heat sink thermal resistance required to maintain the regulator junction temperature below the maximum operating temperature.

To further simplify the flyback regulator design procedure, Texas Instruments is making available computer design software to be used with the Simple Switcher ® line of switching regulators. ***Switchers Made Simple*** *is available on a 3½" diskette for IBM compatible computers from a Texas Instruments sales office in your area or the Texas Instruments Customer Response Center ((800) 477-8924).*

Copyright © 1996–2019, Texas Instruments Incorporated

10 Device and Documentation Support

10.1 Device Support

10.1.1 Third-Party Products Disclaimer

TI'S PUBLICATION OF INFORMATION REGARDING THIRD-PARTY PRODUCTS OR SERVICES DOES NOT CONSTITUTE AN ENDORSEMENT REGARDING THE SUITABILITY OF SUCH PRODUCTS OR SERVICES OR A WARRANTY, REPRESENTATION OR ENDORSEMENT OF SUCH PRODUCTS OR SERVICES, EITHER ALONE OR IN COMBINATION WITH ANY TI PRODUCT OR SERVICE.

10.1.2 Development Support

10.1.2.1 Custom Design With WEBENCH® Tools

Click here to create a custom design using the LM2586 device with the WEBENCH® Power Designer.

1. Start by entering the input voltage (V_{IN}), output voltage (V_{OUT}), and output current (I_{OUT}) requirements.
2. Optimize the design for key parameters such as efficiency, footprint, and cost using the optimizer dial.
3. Compare the generated design with other possible solutions from Texas Instruments.

The WEBENCH Power Designer provides a customized schematic along with a list of materials with real-time pricing and component availability.

In most cases, these actions are available:

- Run electrical simulations to see important waveforms and circuit performance
- Run thermal simulations to understand board thermal performance
- Export customized schematic and layout into popular CAD formats
- Print PDF reports for the design, and share the design with colleagues

Get more information about WEBENCH tools at www.ti.com/WEBENCH.

10.2 Receiving Notification of Documentation Updates

To receive notification of documentation updates, navigate to the device product folder on ti.com. In the upper right corner, click on *Alert me* to register and receive a weekly digest of any product information that has changed. For change details, review the revision history included in any revised document.

10.3 Community Resources

The following links connect to TI community resources. Linked contents are provided "AS IS" by the respective contributors. They do not constitute TI specifications and do not necessarily reflect TI's views; see TI's Terms of Use.

TI E2E™ Online Community ***TI's Engineer-to-Engineer (E2E) Community.*** Created to foster collaboration among engineers. At e2e.ti.com, you can ask questions, share knowledge, explore ideas and help solve problems with fellow engineers.

Design Support ***TI's Design Support*** Quickly find helpful E2E forums along with design support tools and contact information for technical support.

10.4 Trademarks

E2E is a trademark of Texas Instruments.
WEBENCH is a registered trademark of Texas Instruments.
Switchers Made Simple, *Simple Switcher* are registered trademarks of dcl_owner.
All other trademarks are the property of their respective owners.

10.5 Electrostatic Discharge Caution

This integrated circuit can be damaged by ESD. Texas Instruments recommends that all integrated circuits be handled with appropriate precautions. Failure to observe proper handling and installation procedures can cause damage.

ESD damage can range from subtle performance degradation to complete device failure. Precision integrated circuits may be more susceptible to damage because very small parametric changes could cause the device not to meet its published specifications.

10.6 Glossary

SLYZ022 — *TI Glossary*.

This glossary lists and explains terms, acronyms, and definitions.

11 Mechanical, Packaging, and Orderable Information

The following pages include mechanical, packaging, and orderable information. This information is the most current data available for the designated devices. This data is subject to change without notice and revision of this document. For browser-based versions of this data sheet, refer to the left-hand navigation.

Copyright © 1996–2019, Texas Instruments Incorporated

PACKAGING INFORMATION

Orderable part number	Status (1)	Material type (2)	Package | Pins	Package qty | Carrier	RoHS (3)	Lead finish/ Ball material (4)	MSL rating/ Peak reflow (5)	Op temp (°C)	Part marking (6)
LM2586S-12/NOPB	Active	Production	DDPAK/TO-263 (KTW) | 7	45 | TUBE	ROHS Exempt	SN	Level-3-245C-168 HR	-40 to 125	LM2586S -12 P+
LM2586S-12/NOPB.B	Active	Production	DDPAK/TO-263 (KTW) | 7	45 | TUBE	ROHS Exempt	SN	Level-3-245C-168 HR	-40 to 125	LM2586S -12 P+
LM2586S-3.3/NOPB	Active	Production	DDPAK/TO-263 (KTW) | 7	45 | TUBE	ROHS Exempt	SN	Level-3-245C-168 HR	-40 to 125	LM2586S -3.3 P+
LM2586S-3.3/NOPB.B	Active	Production	DDPAK/TO-263 (KTW) | 7	45 | TUBE	ROHS Exempt	SN	Level-3-245C-168 HR	-40 to 125	LM2586S -3.3 P+
LM2586S-5.0/NOPB	Active	Production	DDPAK/TO-263 (KTW) | 7	45 | TUBE	ROHS Exempt	SN	Level-3-245C-168 HR	-40 to 125	LM2586S -5.0 P+
LM2586S-5.0/NOPB.B	Active	Production	DDPAK/TO-263 (KTW) | 7	45 | TUBE	ROHS Exempt	SN	Level-3-245C-168 HR	-40 to 125	LM2586S -5.0 P+
LM2586S-ADJ/NOPB	Active	Production	DDPAK/TO-263 (KTW) | 7	45 | TUBE	ROHS Exempt	SN	Level-3-245C-168 HR	-40 to 125	LM2586S -ADJ P+
LM2586S-ADJ/NOPB.B	Active	Production	DDPAK/TO-263 (KTW) | 7	45 | TUBE	ROHS Exempt	SN	Level-3-245C-168 HR	-40 to 125	LM2586S -ADJ P+
LM2586SX-3.3/NOPB	Active	Production	DDPAK/TO-263 (KTW) | 7	500 | LARGE T&R	ROHS Exempt	SN	Level-3-245C-168 HR	-40 to 125	LM2586S -3.3 P+
LM2586SX-3.3/NOPB.B	Active	Production	DDPAK/TO-263 (KTW) | 7	500 | LARGE T&R	ROHS Exempt	SN	Level-3-245C-168 HR	-40 to 125	LM2586S -3.3 P+
LM2586SX-5.0/NOPB	Active	Production	DDPAK/TO-263 (KTW) | 7	500 | LARGE T&R	ROHS Exempt	SN	Level-3-245C-168 HR	-40 to 125	LM2586S -5.0 P+
LM2586SX-5.0/NOPB.B	Active	Production	DDPAK/TO-263 (KTW) | 7	500 | LARGE T&R	ROHS Exempt	SN	Level-3-245C-168 HR	-40 to 125	LM2586S -5.0 P+
LM2586SX-ADJ/NOPB	Active	Production	DDPAK/TO-263 (KTW) | 7	500 | LARGE T&R	ROHS Exempt	SN	Level-3-245C-168 HR	-40 to 125	LM2586S -ADJ P+
LM2586SX-ADJ/NOPB.B	Active	Production	DDPAK/TO-263 (KTW) | 7	500 | LARGE T&R	ROHS Exempt	SN	Level-3-245C-168 HR	-40 to 125	LM2586S -ADJ P+
LM2586T-3.3/NOPB	Active	Production	TO-220 (NDZ) | 7	45 | TUBE	ROHS Exempt	SN	Level-1-NA-UNLIM	-40 to 125	LM2586T -3.3 P+
LM2586T-3.3/NOPB.B	Active	Production	TO-220 (NDZ) | 7	45 | TUBE	ROHS Exempt	SN	Level-1-NA-UNLIM	-40 to 125	LM2586T -3.3 P+

Orderable part number	Status (1)	Material type (2)	Package | Pins	Package qty | Carrier	RoHS (3)	Lead finish/ Ball material (4)	MSL rating/ Peak reflow (5)	Op temp (°C)	Part marking (6)
LM2586T-5.0/NOPB	Active	Production	TO-220 (NDZ) | 7	45 | TUBE	ROHS Exempt	SN	Level-1-NA-UNLIM	-40 to 125	LM2586T -5.0 P+
LM2586T-5.0/NOPB.B	Active	Production	TO-220 (NDZ) | 7	45 | TUBE	ROHS Exempt	SN	Level-1-NA-UNLIM	-40 to 125	LM2586T -5.0 P+
LM2586T-ADJ/NOPB	Active	Production	TO-220 (NDZ) | 7	45 | TUBE	ROHS Exempt	SN	Level-1-NA-UNLIM	-40 to 125	LM2586T -ADJ P+
LM2586T-ADJ/NOPB.B	Active	Production	TO-220 (NDZ) | 7	45 | TUBE	ROHS Exempt	SN	Level-1-NA-UNLIM	-40 to 125	LM2586T -ADJ P+

(1) **Status:** For more details on status, see our product life cycle.

(2) **Material type:** When designated, preproduction parts are prototypes/experimental devices, and are not yet approved or released for full production. Testing and final process, including without limitation quality assurance, reliability performance testing, and/or process qualification, may not yet be complete, and this item is subject to further changes or possible discontinuation. If available for ordering, purchases will be subject to an additional waiver at checkout, and are intended for early internal evaluation purposes only. These items are sold without warranties of any kind.

(3) **RoHS values:** Yes, No, RoHS Exempt. See the TI RoHS Statement for additional information and value definition.

(4) **Lead finish/Ball material:** Parts may have multiple material finish options. Finish options are separated by a vertical ruled line. Lead finish/Ball material values may wrap to two lines if the finish value exceeds the maximum column width.

(5) **MSL rating/Peak reflow:** The moisture sensitivity level ratings and peak solder (reflow) temperatures. In the event that a part has multiple moisture sensitivity ratings, only the lowest level per JEDEC standards is shown. Refer to the shipping label for the actual reflow temperature that will be used to mount the part to the printed circuit board.

(6) **Part marking:** There may be an additional marking, which relates to the logo, the lot trace code information, or the environmental category of the part.

Multiple part markings will be inside parentheses. Only one part marking contained in parentheses and separated by a "~" will appear on a part. If a line is indented then it is a continuation of the previous line and the two combined represent the entire part marking for that device.

Important Information and Disclaimer: The information provided on this page represents TI's knowledge and belief as of the date that it is provided. TI bases its knowledge and belief on information provided by third parties, and makes no representation or warranty as to the accuracy of such information. Efforts are underway to better integrate information from third parties. TI has taken and continues to take reasonable steps to provide representative and accurate information but may not have conducted destructive testing or chemical analysis on incoming materials and chemicals. TI and TI suppliers consider certain information to be proprietary, and thus CAS numbers and other limited information may not be available for release.

In no event shall TI's liability arising out of such information exceed the total purchase price of the TI part(s) at issue in this document sold by TI to Customer on an annual basis.

TAPE AND REEL INFORMATION

REEL DIMENSIONS

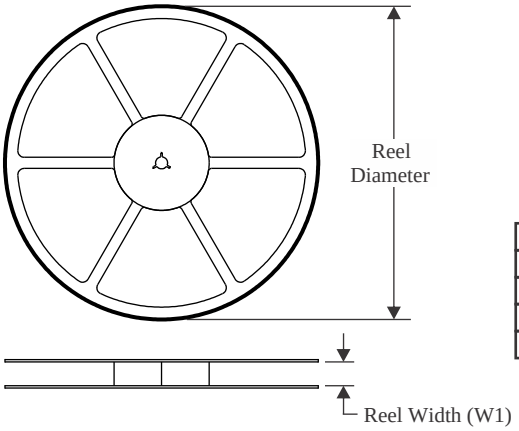

TAPE DIMENSIONS

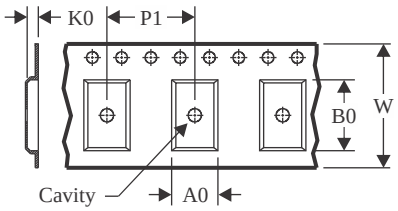

A0	Dimension designed to accommodate the component width
B0	Dimension designed to accommodate the component length
K0	Dimension designed to accommodate the component thickness
W	Overall width of the carrier tape
P1	Pitch between successive cavity centers

QUADRANT ASSIGNMENTS FOR PIN 1 ORIENTATION IN TAPE

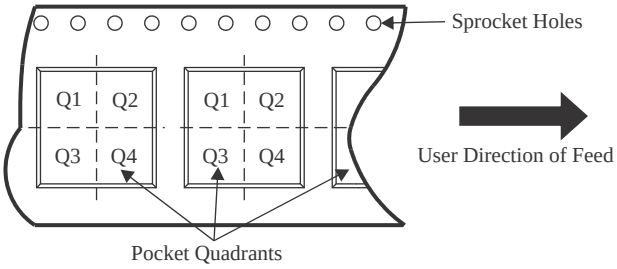

*All dimensions are nominal

Device	Package Type	Package Drawing	Pins	SPQ	Reel Diameter (mm)	Reel Width W1 (mm)	A0 (mm)	B0 (mm)	K0 (mm)	P1 (mm)	W (mm)	Pin1 Quadrant
LM2586SX-3.3/NOPB	DDPAK/ TO-263	KTW	7	500	330.0	24.4	10.75	14.85	5.0	16.0	24.0	Q2
LM2586SX-5.0/NOPB	DDPAK/ TO-263	KTW	7	500	330.0	24.4	10.75	14.85	5.0	16.0	24.0	Q2
LM2586SX-ADJ/NOPB	DDPAK/ TO-263	KTW	7	500	330.0	24.4	10.75	14.85	5.0	16.0	24.0	Q2

TAPE AND REEL BOX DIMENSIONS

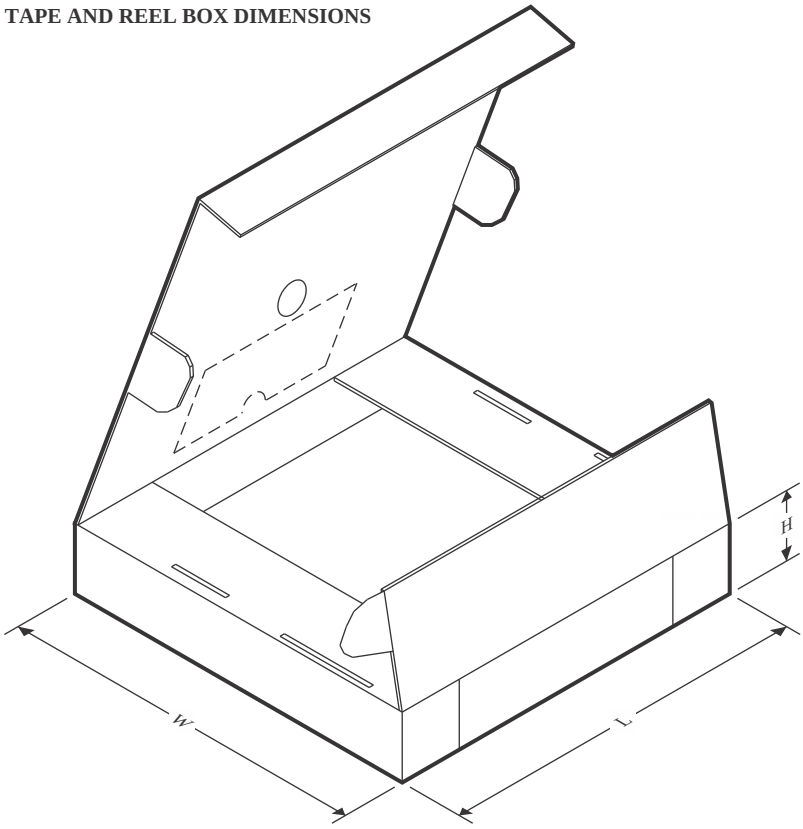

*All dimensions are nominal

Device	Package Type	Package Drawing	Pins	SPQ	Length (mm)	Width (mm)	Height (mm)
LM2586SX-3.3/NOPB	DDPAK/TO-263	KTW	7	500	356.0	356.0	45.0
LM2586SX-5.0/NOPB	DDPAK/TO-263	KTW	7	500	356.0	356.0	45.0
LM2586SX-ADJ/NOPB	DDPAK/TO-263	KTW	7	500	356.0	356.0	45.0

TUBE

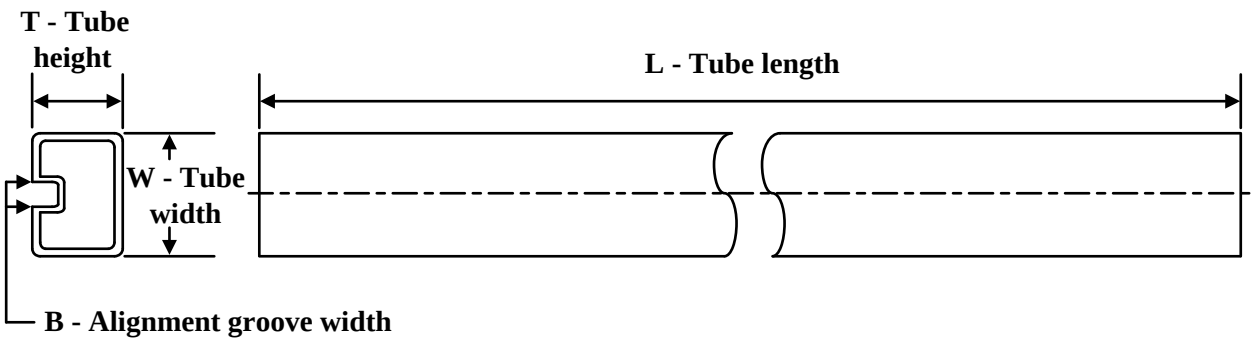

*All dimensions are nominal

Device	Package Name	Package Type	Pins	SPQ	L (mm)	W (mm)	T (µm)	B (mm)
LM2586S-12/NOPB	KTW	TO-263	7	45	502	25	8204.2	9.19
LM2586S-12/NOPB.B	KTW	TO-263	7	45	502	25	8204.2	9.19
LM2586S-3.3/NOPB	KTW	TO-263	7	45	502	25	8204.2	9.19
LM2586S-3.3/NOPB.B	KTW	TO-263	7	45	502	25	8204.2	9.19
LM2586S-5.0/NOPB	KTW	TO-263	7	45	502	25	8204.2	9.19
LM2586S-5.0/NOPB.B	KTW	TO-263	7	45	502	25	8204.2	9.19
LM2586S-ADJ/NOPB	KTW	TO-263	7	45	502	25	8204.2	9.19
LM2586S-ADJ/NOPB.B	KTW	TO-263	7	45	502	25	8204.2	9.19
LM2586T-3.3/NOPB	NDZ	TO-220	7	45	502	30	30048.2	10.74
LM2586T-3.3/NOPB.B	NDZ	TO-220	7	45	502	30	30048.2	10.74
LM2586T-5.0/NOPB	NDZ	TO-220	7	45	502	30	30048.2	10.74
LM2586T-5.0/NOPB.B	NDZ	TO-220	7	45	502	30	30048.2	10.74
LM2586T-ADJ/NOPB	NDZ	TO-220	7	45	502	30	30048.2	10.74
LM2586T-ADJ/NOPB.B	NDZ	TO-220	7	45	502	30	30048.2	10.74

NDZ0007B

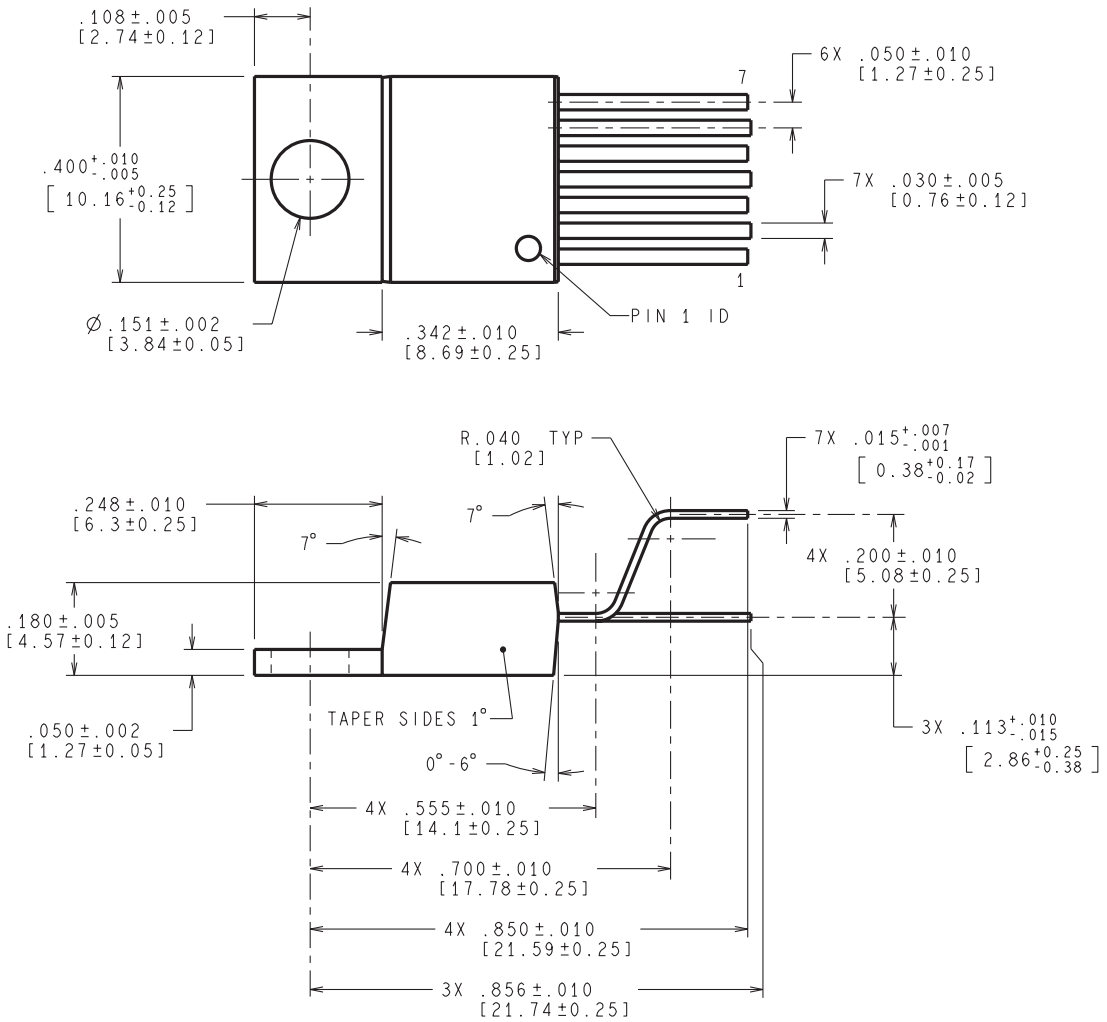

CONTROLING DIMENSIONS IS INCH
VALUES IN [ ] ARE MILLIMETERS

TA07B (Rev E)

KTW0007B

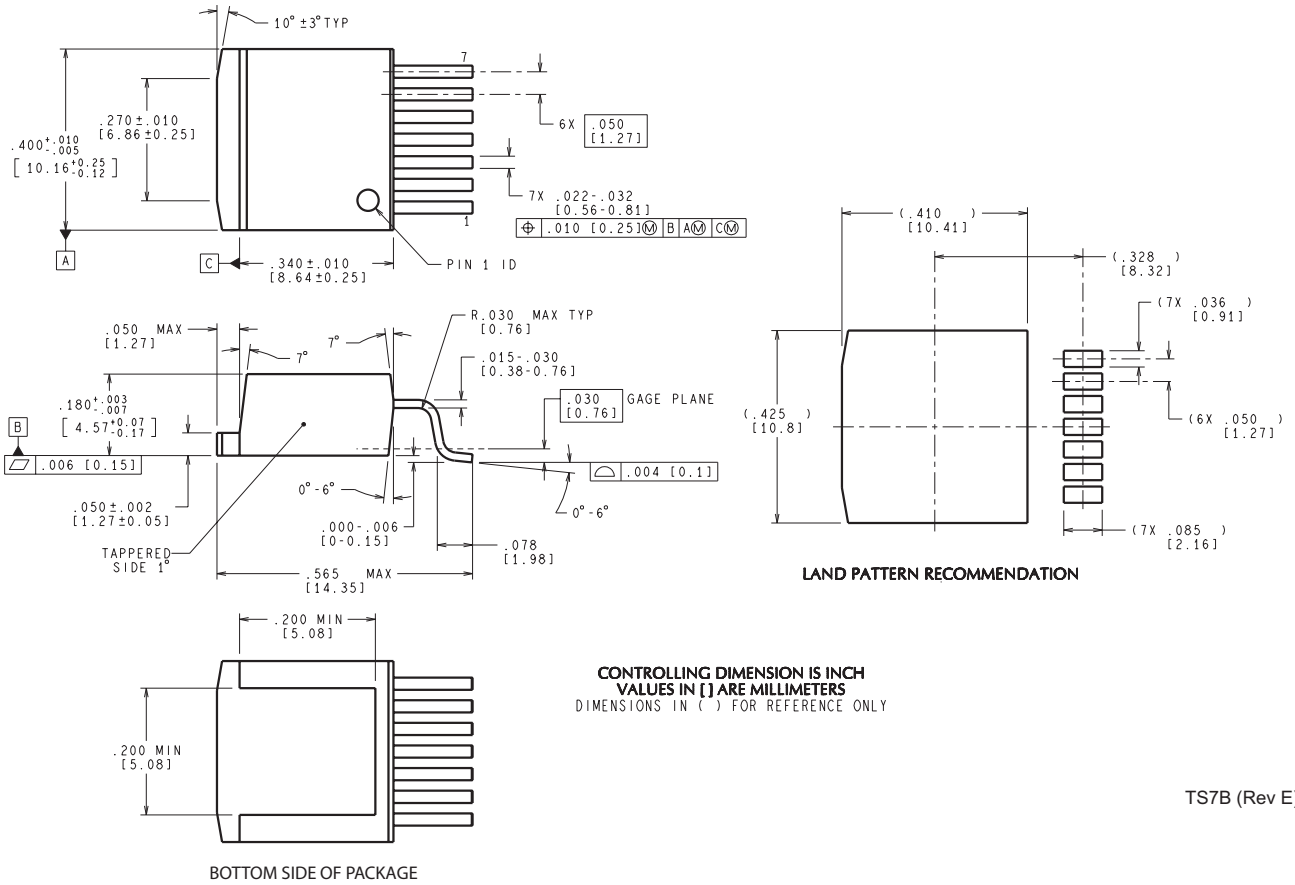
10° ±3° TYP
7
.270±.010
[6.86±0.25]
.400+.010 -.005
[10.16+0.25 -0.12]
6X .050 [1.27]
7X .022-.032
[0.56-0.81]
.010 [0.25] M B A M C M
1
A
C
.340±.010
[8.64±0.25]
PIN 1 ID
.050 MAX
[1.27]
7°
7°
R.030 MAX TYP
[0.76]
.015-.030
[0.38-0.76]
.030 [0.76] GAGE PLANE
.180+.003 -.007
[4.57+0.07 -0.17]
B
.006 [0.15]
.004 [0.1]
0°-6°
0°-6°
.050±.002
[1.27±0.05]
.000-.006
[0-0.15]
.078
[1.98]
TAPPERED
SIDE 1
.565 MAX
[14.35]
(.410)
[10.41]
(.328)
[8.32]
(7X .036)
[0.91]
(.425)
[10.8]
(6X .050)
[1.27]
(7X .085)
[2.16]
LAND PATTERN RECOMMENDATION
.200 MIN
[5.08]
.200 MIN
[5.08]
BOTTOM SIDE OF PACKAGE
CONTROLLING DIMENSION IS INCH
VALUES IN [ ] ARE MILLIMETERS
DIMENSIONS IN ( ) FOR REFERENCE ONLY
TS7B (Rev E)

IMPORTANT NOTICE AND DISCLAIMER

TI PROVIDES TECHNICAL AND RELIABILITY DATA (INCLUDING DATASHEETS), DESIGN RESOURCES (INCLUDING REFERENCE DESIGNS), APPLICATION OR OTHER DESIGN ADVICE, WEB TOOLS, SAFETY INFORMATION, AND OTHER RESOURCES “AS IS” AND WITH ALL FAULTS, AND DISCLAIMS ALL WARRANTIES, EXPRESS AND IMPLIED, INCLUDING WITHOUT LIMITATION ANY IMPLIED WARRANTIES OF MERCHANTABILITY, FITNESS FOR A PARTICULAR PURPOSE OR NON-INFRINGEMENT OF THIRD PARTY INTELLECTUAL PROPERTY RIGHTS.

These resources are intended for skilled developers designing with TI products. You are solely responsible for (1) selecting the appropriate TI products for your application, (2) designing, validating and testing your application, and (3) ensuring your application meets applicable standards, and any other safety, security, regulatory or other requirements.

These resources are subject to change without notice. TI grants you permission to use these resources only for development of an application that uses the TI products described in the resource. Other reproduction and display of these resources is prohibited. No license is granted to any other TI intellectual property right or to any third party intellectual property right. TI disclaims responsibility for, and you fully indemnify TI and its representatives against any claims, damages, costs, losses, and liabilities arising out of your use of these resources.

TI’s products are provided subject to TI’s Terms of Sale, TI’s General Quality Guidelines, or other applicable terms available either on ti.com or provided in conjunction with such TI products. TI’s provision of these resources does not expand or otherwise alter TI’s applicable warranties or warranty disclaimers for TI products. Unless TI explicitly designates a product as custom or customer-specified, TI products are standard, catalog, general purpose devices.

TI objects to and rejects any additional or different terms you may propose.

Copyright © 2026, Texas Instruments Incorporated

Last updated 10/2025