THIS DRAWING IS UNPUBLISHED. RELEASED FOR PUBLICATION 20
© COPYRIGHT 20 BY TYCO ELECTRONICS CORPORATION. ALL RIGHTS RESERVED.

LOC	DIST
A	66

REVISIONS

P	LTR	DESCRIPTION	DATE	DWN	APVD
	D	ECR-20-014423	12OCT2020	FJ	TE
	D1	ECR-21-003293	17MAR2021	FZ	GB
	E	ECR-21-118593	25OCT2021	TB	RK
	E1	ECR-21-120795	15NOV2021	FZ	TE

PART NUMBER	REVISION	DESCRIPTION	FEED TYPE
2151739-2	E	FINE CRIMP HEIGHT ADJUST	PNEUMATIC
7-2151739-2	E	PNEUMATIC AND CRIMP TOOLING KIT	PNEUMATIC
7-2151739-7	B	CRIMP TOOLING KIT	-

ATLANTIC VERSION TERMINATOR INTERFACE ADAPTER

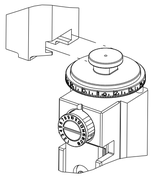

APPLICATOR DATA		
CRIMP	SIZE	TYPE
WIRE	3.89 mm [.153]	F
INSUL	-	-
APPLICATOR INSTRUCTIONS 408-35042		

TERMINAL DATA: TE TERMINAL			TE CRIMP SPECIFICATION
TERMINAL NAME: PV4 CONNECTOR PIN AND SOCKET			
WIRE STRIP LENGTH 4.58-4.96 mm [.180-.195 IN]		INSULATION DIAMETER RANGE ∅ -	
TERMINAL APPLICATION SPECIFICATION	114-137077	-	-
	-	-	-
TERMINALS APPLIED 4 6			
TE TERMINAL	TE TERMINAL	TE TERMINAL	TE TERMINAL
2270251-2	2270226-2	2363117-2	2363118-2

WIRE SIZE	CRIMP HEIGHT mm [INCH]	CRIMP HEIGHT REFERENCE SETTING 3
10 AWG OR 6.00mm2	2.49+/-0.05 [.098+/-.002]	2.2
12 AWG OR 4.00mm2	2.14+/-0.05 [.084+/-.002]	5.8

1. RECOMMENDED SPARE PARTS
2. REFER TO SUPPLIED INSTRUCTION SHEET FOR CLEANING, LUBRICATION AND STORAGE OF APPLICATOR.
3. CRIMP HEIGHT REFERENCE SETTING WAS THE SETTING USED WHEN THE APPLICATOR WAS QUALIFIED AT THE FACTORY. ADJUSTMENT MAY BE NECESSARY WHEN RUNNING APPLICATOR IN THE FIELD.
4. TERMINAL PITCH NOT COMPATIBLE WITH MECHANICAL FEED.
5. UNLESS SPECIFIED OTHERWISE TORQUE VALUES SHALL BE USED PER DOCUMENT, 101-35000.
6. TERMINAL LUBRICANT IS RECOMMENDED.

*WARNING
ON INSTALLATION, SET WIRE DISC TO CRIMP HEIGHT REFERENCE SETTING FOR LARGEST WIRE SIZE. CRIMP HEIGHT REFERENCE SETTINGS GREATER THAN THE VALUE SHOWN MAY CAUSE DAMAGE TO THE CRIMP TOOLING, REFER TO THE INSTRUCTION SHEET FOR PROPER SETUP AND ADJUSTMENTS.

	-77	-72	-2	PART NO	DESCRIPTION	ITEM NO
	-	1	1	2119641-1	FEED CAM, AIR FEED	248
	-	1	1	7-18023-7	SCR, SKT HD CAP M3 X 4.0	241
	-	1	1	2844940-1	AIR FEED MODULE	238
	-	REF	REF	994970-2	COUNTER, MAGNETIC	164
	-	1	1	318563-1	GUARD, FRONT CHIP	119
6	-	1	1	2119955-1	ASSY, LUBRICATOR, SIDE FEED	113
	-	1	1	2844908-1	SCREW, LOCKING	99
	-	1	1	2844907-1	POST, LOCKING	98
	-	1	1	455888-5	SPACER, CRIMPER	82
	-	2	2	2079383-4	SCR, BHSC, RoHS (M4 X 8)	79
	-	1	1	1803096-1	EXTENSION PLATE	78
	-	1	1	1803607-3	DOCUMENTATION PACKAGE	71
	-	1	1	2119740-1	TAG,IDENTIFICATION	67
	-	2	2	2168078-1	SCREW, DRIVE, RH, RoHS, 2 x .188	66
	-	1	1	2168083-2	SCR, SKT HD CAP, RoHS, M4 X 8.0	60
	-	1	1	5-18022-5	SCR, HEX HD CAP, M4 X 6.0	59
	-	1	1	1338685-1	PAWL, FEED	56
	-	4	4	2168083-3	SCR, SKT HD CAP, RoHS, M4 X 12.0	54
	-	2	2	2-2168083-5	SCR, SKT HD CAP, RoHS, M4 X 14	53
	-	1	1	5018030-1	NUT, HEX, REG, RoHS, M3	52
	-	1	1	811242-5	BUMPER, HOLD DOWN	51
	-	1	1	690753-2	SPACER, TONKER	50
	-	1	1	18023-9	SCR, SKT HD CAP M4 X 6.0	49
	-	1	1	1803583-9	APPLICATOR BASIC ASSEMBLY, SF	46
	-	1	1	1803515-1	RAM ASSEMBLY, SF ATLANTIC	44
	-	1	1	1803602-1	SCR, BHSC, RoHS (M8 X 25)	41
	-	1	1	3-1752356-3	SUPPORT, TERMINAL	34
	-	2	2	2079383-5	SCR, BHSC, RoHS (M4 X 20)	33
	-	2	2	2-2844962-0	SPACER, CYLINDRICAL, STRIP GUIDE	30
	-	1	1	2844992-1	ASSEMBLY, STRIP GUIDE	29
	-	1	1	1-455888-0	SPACER, CRIMPER	28
	-	1	1	1320928-4	STRIP GUIDE	24
	-	1	1	1-18028-2	WASHER, FLAT, REG M4	22
	-	1	1	2168083-2	SCR, SKT HD CAP, RoHS, M4 X 8.0	21
	-	1	1	2119533-1	STRIPPER, SIDE FEED	19
1	-	1	1	2119806-1	INSERT, SHEAR	13
	-	1	1	3-22280-3	SPRING, COMPRESSION	12
	-	1	1	1-356885-4	STOP, SHEAR	11
1	-	1	1	2119805-1	SHEAR HOLDER, FRONT	10
1	-	1	1	454276-5	FLOATING SHEAR, FRONT	9
1	1	2	1	2-1633933-9	ANVIL, COMBINATION	8
	-	1	1	240641-5	SPACER	7
	-	-	-	-	-	6
	-	1	1	1-2119757-1	DEPRESSOR, SHEAR	5
	-	-	-	-	-	4
	-	-	-	-	-	3
	-	-	-	-	-	2
1	1	2	1	9-1633609-2	CRIMPER, WIRE	1

ATLANTIC VERSION
Shown on sheets 1 of 4 & 2 of 4
(Pacific version shown on sheets 3 of 4 & 4 of 4)

THIS DRAWING IS A CONTROLLED DOCUMENT FOR TYCO ELECTRONICS CORPORATION. IT IS SUBJECT TO CHANGE. THE POINTER TO THE CORRECT INFORMATION SHOULD BE CONTACTED FOR THE LATEST REVISION.

DIMENSIONS: mm
TOLERANCES UNLESS OTHERWISE SPECIFIED: 0 PLC ±- 1 PLC ±- 2 PLC ±- 3 PLC ±- 4 PLC ±- ANGLES ±-
MATERIAL -
FINISH -

DWN BOB HIGMAN 01JAN2012
CHK T. ELBIN 01JAN2012
APVD T. ELBIN 01JAN2012
PRODUCT SPEC -
APPLICATION SPEC -
WEIGHT -

TE Connectivity
Harrisburg, PA 17105-3608

NAME Ocean Side Feed Applicator -

SIZE	CAGE CODE	DRAWING NO	RESTRICTED TO
A1	00779	C-2151739	-

Customer Accessible Production Drawing | SCALE 1:2 | SHEET 1 OF 4 | REV E1

AMP 4805 REV 31MAR2000

SHEETS 3 & 4 ARE NOT REQUIRED FOR ATLANTIC VERSION

THIS DRAWING IS UNPUBLISHED. RELEASED FOR PUBLICATION 20
© COPYRIGHT 20 BY TYCO ELECTRONICS CORPORATION. ALL RIGHTS RESERVED.

LOC	DIST
A	66

REVISIONS

P	LTR	DESCRIPTION	DATE	DWN	APVD
	-	SEE SHEET 1	-	-	-

FEED TYPE

PNEUMATIC

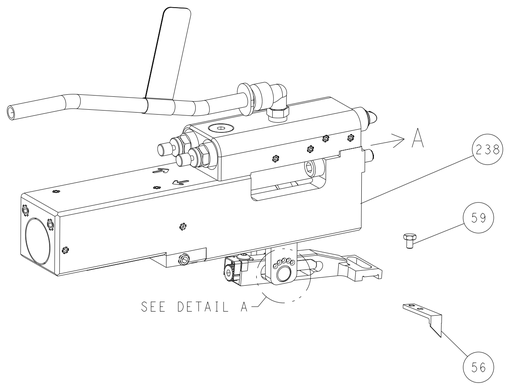

FEED SPRING SETTING POSITION
(SHOWN FROM REAR SIDE)

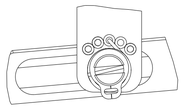

DETAIL A

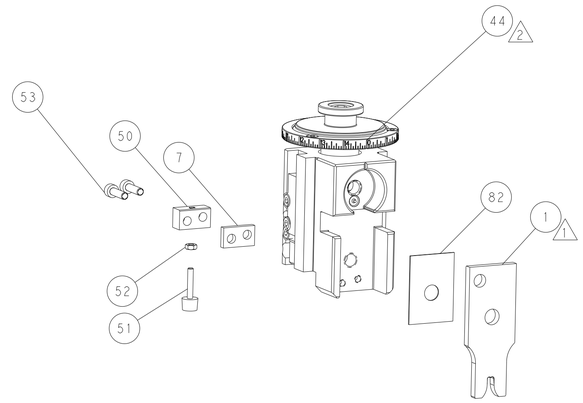

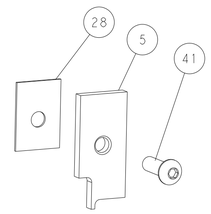

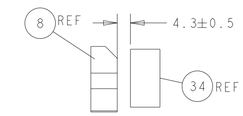

TERMINAL SUPPORT LOCATION

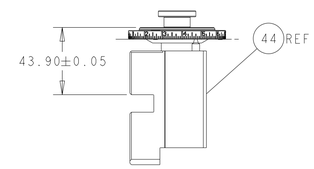

RAM SET-UP

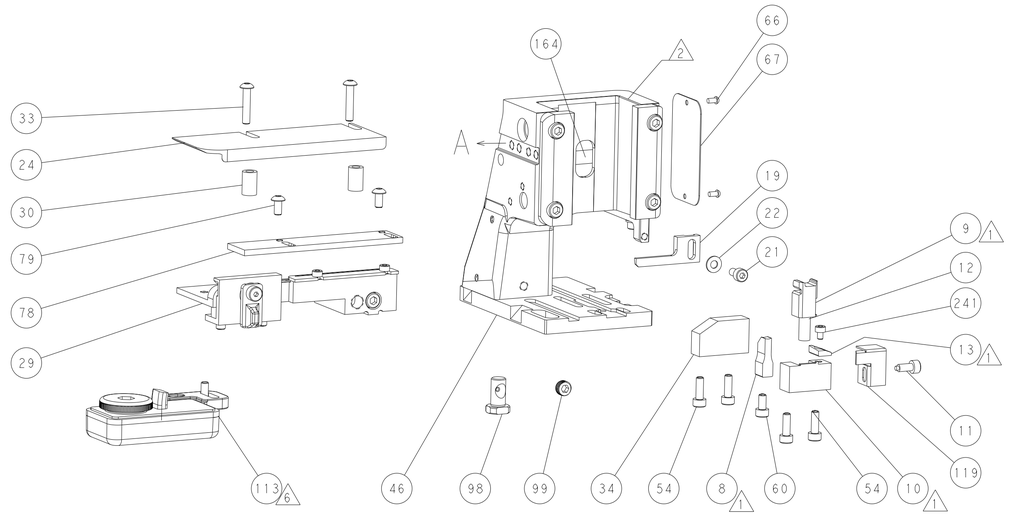

CAM POSITION

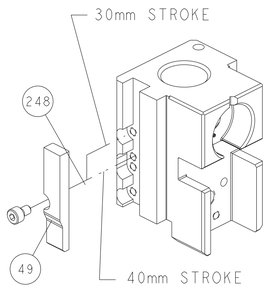

AIR FEED

ITEM 30 LOCATED AT
FRONT HOLES

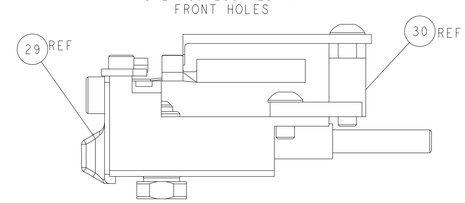

FEED TRACK POSITION
GUIDE BY WIRE BARREL

ATLANTIC VERSION

Shown on sheets 1 of 4 & 2 of 4
(Pacific version shown on sheets 3 of 4 & 4 of 4)

THIS DRAWING IS A CONTROLLED DOCUMENT FOR TYCO ELECTRONICS CORPORATION. IT IS SUBJECT TO CHANGE WITHOUT NOTICE. CONTACT THE ORGANIZATION SHOULD BE CONTACTED FOR THE LATEST REVISION.

DIMENSIONS: mm

TOLERANCES UNLESS OTHERWISE SPECIFIED:
0 PLC ±-
1 PLC ±-
2 PLC ±-
3 PLC ±-
4 PLC ±-
ANGLES ±-

MATERIAL - -
FINISH - -

DWN	BOB HIGMAN	01JAN2012
CHK	T. ELBIN	01JAN2012
APVD	T. ELBIN	01JAN2012
PRODUCT SPEC	-	
APPLICATION SPEC	-	
WEIGHT	-	

TE Connectivity
Harrisburg, PA 17105-3608

NAME: Ocean Side Feed Applicator -

SIZE	CAGE CODE	DRAWING NO	RESTRICTED TO
A1	00779	C-2151739	-

Customer Accessible Production Drawing | SCALE 1:2 | SHEET 2 OF 4 | REV E1

SHEETS 3 & 4 ARE NOT REQUIRED FOR ATLANTIC VERSION

THIS DRAWING IS UNPUBLISHED. RELEASED FOR PUBLICATION 20
© COPYRIGHT 20 BY TYCO ELECTRONICS CORPORATION. ALL RIGHTS RESERVED.

LOC	DIST
A	66

REVISIONS

P	LTR	DESCRIPTION	DATE	DWN	APVD
	-	SEE SHEET 1	-	-	-

PART NUMBER	REVISION	DESCRIPTION	FEED TYPE
2-2151739-2	E	FINE CRIMP HEIGHT ADJUST	PNEUMATIC
7-2151739-7	B	CRIMP TOOLING KIT	-

PACIFIC VERSION TERMINATOR INTERFACE ADAPTER

APPLICATOR DATA		
CRIMP	SIZE	TYPE
WIRE	3.89 mm [.153]	F
INSUL	-	-
APPLICATOR INSTRUCTIONS 408-35042		

TERMINAL DATA: TE TERMINAL		TE CRIMP SPECIFICATION	
TERMINAL NAME: PV4 CONNECTOR PIN AND SOCKET			
WIRE STRIP LENGTH 4.58-4.96 mm [.180-.195 IN]		INSULATION DIAMETER RANGE ∅ -	
TERMINAL APPLICATION SPECIFICATION	114-137077	-	-
	-	-	-
TERMINALS APPLIED 4 6			
TE TERMINAL	TE TERMINAL	TE TERMINAL	TE TERMINAL
2270251-2	2270226-2	2363117-2	2363118-2

WIRE SIZE	CRIMP HEIGHT mm [INCH]	CRIMP HEIGHT REFERENCE SETTING 3
10 AWG OR 6.00mm2	2.49+/-0.05 [.098+/-.002]	2.2
12 AWG OR 4.00mm2	2.14+/-0.05 [.084+/-.002]	5.8

1. RECOMMENDED SPARE PARTS
2. REFER TO SUPPLIED INSTRUCTION SHEET FOR CLEANING, LUBRICATION AND STORAGE OF APPLICATOR.
3. CRIMP HEIGHT REFERENCE SETTING WAS THE SETTING USED WHEN THE APPLICATOR WAS QUALIFIED AT THE FACTORY. ADJUSTMENT MAY BE NECESSARY WHEN RUNNING APPLICATOR IN THE FIELD.
4. TERMINAL PITCH NOT COMPATIBLE WITH MECHANICAL FEED.

5. UNLESS SPECIFIED OTHERWISE TORQUE VALUES SHALL BE USED PER DOCUMENT, 101-35000.

6. TERMINAL LUBRICANT IS RECOMMENDED.

*WARNING
ON INSTALLATION, SET WIRE DISC TO CRIMP HEIGHT REFERENCE SETTING FOR LARGEST WIRE SIZE. CRIMP HEIGHT REFERENCE SETTINGS GREATER THAN THE VALUE SHOWN MAY CAUSE DAMAGE TO THE CRIMP TOOLING, REFER TO THE INSTRUCTION SHEET FOR PROPER SETUP AND ADJUSTMENTS.

	-77	-22	PART NO	DESCRIPTION	ITEM NO
	-	1	7-18023-7	SCR, SKT HD CAP M3 X 4.0	241
	-	1	2844940-1	AIR FEED MODULE	238
	-	REF	994970-2	COUNTER, MAGNETIC	164
	-	1	2119641-2	FEED CAM, AIR FEED	151
	-	1	2168083-8	SCR, SKT HD CAP, RoHS, M4 X 16	144
	-	4	2168083-9	SCR, SKT HD CAP, RoHS, M4 X 20	143
	-	1	1-1803583-0	APPLICATOR BASIC ASSEMBLY, SF	141
	-	1	1803516-1	RAM ASSEMBLY, SF PACIFIC	140
	-	1	318563-1	GUARD, FRONT CHIP	119
6	-	1	2119955-1	ASSY, LUBRICATOR, SIDE FEED	113
	-	1	2844908-1	SCREW, LOCKING	99
	-	1	2844907-1	POST, LOCKING	98
	-	1	455888-5	SPACER, CRIMPER	82
	-	2	2079383-4	SCR, BHSC, RoHS (M4 X 8)	79
	-	1	1803096-1	EXTENSION PLATE	78
	-	1	1803607-3	DOCUMENTATION PACKAGE	71
	-	1	2119740-1	TAG,IDENTIFICATION	67
	-	2	2168078-1	SCREW, DRIVE, RH, RoHS, 2 x .188	66
	-	1	5-18022-5	SCR, HEX HD CAP, M4 X 6.0	59
	-	1	1338685-1	PAWL, FEED	56
	-	2	2-2168083-5	SCR, SKT HD CAP, RoHS, M4 X 14	53
	-	1	5018030-1	NUT, HEX, REG, RoHS, M3	52
	-	1	811242-5	BUMPER, HOLD DOWN	51
	-	1	690753-2	SPACER, TONKER	50
	-	1	18023-9	SCR, SKT HD CAP M4 X 6.0	49
	-	1	1803602-1	SCR, BHSC, RoHS (M8 X 25)	41
	-	1	3-1752356-3	SUPPORT, TERMINAL	34
	-	2	2079383-5	SCR, BHSC, RoHS (M4 X 20)	33
	-	2	2-2844962-0	SPACER, CYLINDRICAL, STRIP GUIDE	30
	-	1	2844992-1	ASSEMBLY, STRIP GUIDE	29
	-	1	1-455888-0	SPACER, CRIMPER	28
	-	1	1320928-4	STRIP GUIDE	24
	-	1	1-18028-2	WASHER, FLAT, REG M4	22
	-	1	2168083-2	SCR, SKT HD CAP, RoHS, M4 X 8.0	21
	-	1	2119533-1	STRIPPER, SIDE FEED	19
1	-	1	2119806-1	INSERT, SHEAR	13
	-	1	3-22280-3	SPRING, COMPRESSION	12
	-	1	1-356885-4	STOP, SHEAR	11
1	-	1	2119805-1	SHEAR HOLDER, FRONT	10
1	-	1	454276-5	FLOATING SHEAR, FRONT	9
1	1	1	2-1633933-9	ANVIL, COMBINATION	8
	-	1	240641-5	SPACER	7
	-	-	-	-	6
	-	1	1-2119757-1	DEPRESSOR, SHEAR	5
	-	-	-	-	4
	-	-	-	-	3
	-	-	-	-	2
1	1	1	9-1633609-2	CRIMPER, WIRE	1

PACIFIC VERSION
Shown on sheets 3 of 4 & 4 of 4
(Atlantic version shown on sheets 1 of 4 & 2 of 4)

THIS DRAWING IS A CONTROLLED DOCUMENT FOR TYCO ELECTRONICS CORPORATION. IT IS SUBJECT TO CHANGE. ANY INFORMATION RECEIVED BY OTHER THAN THIS ORGANIZATION SHOULD BE CONTACTED FOR THE LATEST REVISION.

DIMENSIONS: mm
TOLERANCES UNLESS OTHERWISE SPECIFIED:
0 PLC ±-
1 PLC ±-
2 PLC ±-
3 PLC ±-
4 PLC ±-
ANGLES ±-
MATERIAL - -
FINISH - -

DWN 01JAN2012 BOB HIGMAN
CHK 01JAN2012 T.ELBIN
APVD 01JAN2012 T.ELBIN
PRODUCT SPEC -
APPLICATION SPEC -
WEIGHT -

TE Connectivity
Harrisburg, PA 17105-3608

NAME Ocean Side Feed Applicator -

SIZE	CAGE CODE	DRAWING NO	RESTRICTED TO
A1	00779	C-2151739	-

Customer Accessible Production Drawing | SCALE 1:2 | SHEET 3 OF 4 | REV E1

AMP 4805 REV 31MARZ000

SHEETS 1 & 2 ARE NOT REQUIRED FOR PACIFIC VERSION

THIS DRAWING IS UNPUBLISHED. RELEASED FOR PUBLICATION 20
© COPYRIGHT 20 BY TYCO ELECTRONICS CORPORATION. ALL RIGHTS RESERVED.

LOC	DIST
A	66

REVISIONS

P	LTR	DESCRIPTION	DATE	DWN	APVD
	-	SEE SHEET 1	-	-	-

FEED TYPE

PNEUMATIC

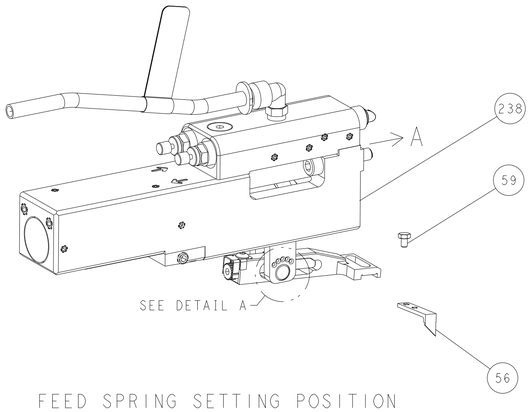

FEED SPRING SETTING POSITION
(SHOWN FROM REAR SIDE)

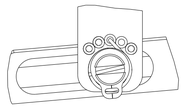

DETAIL A

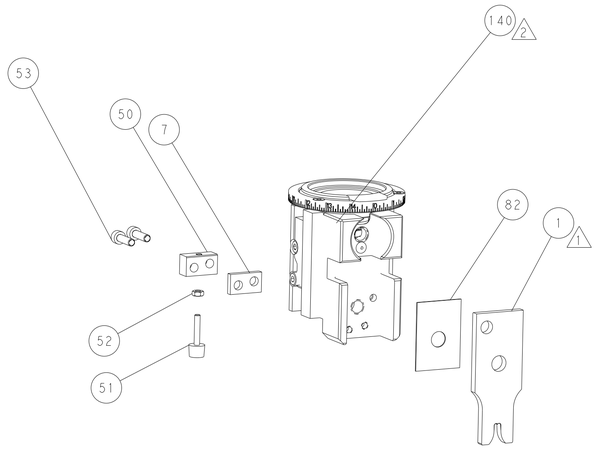

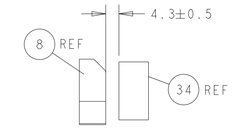

TERMINAL SUPPORT LOCATION

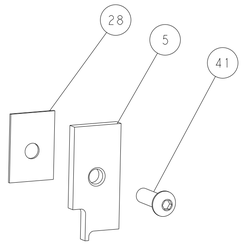

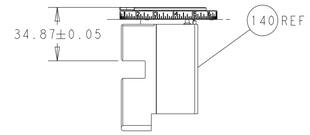

RAM SET-UP

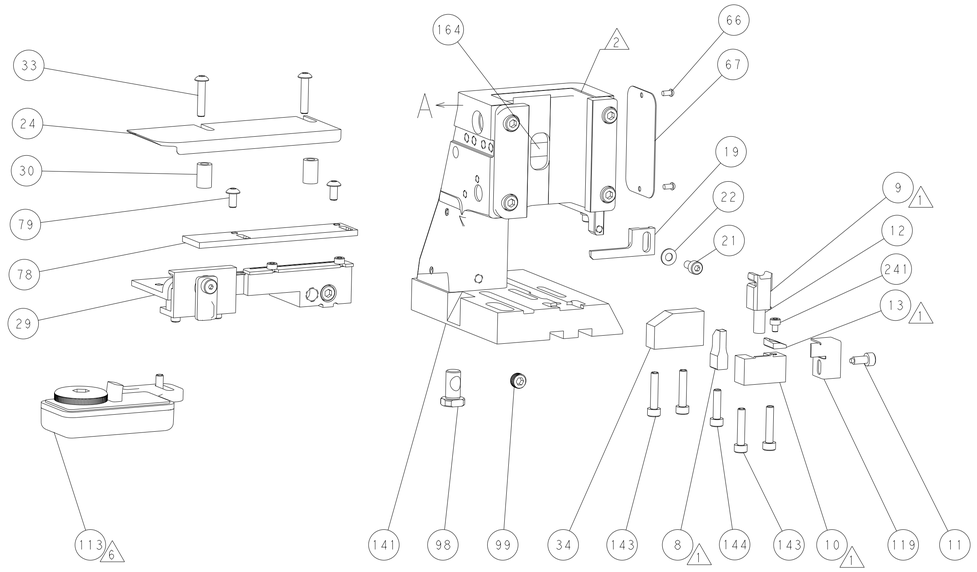

ITEM 30 LOCATED AT
FRONT HOLES

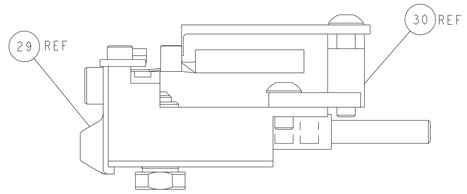

FEED TRACK POSITION
GUIDE BY WIRE BARREL

CAM POSITION

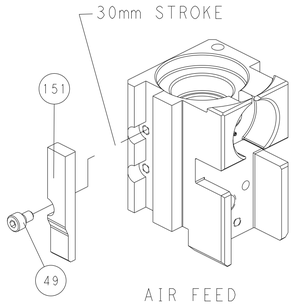

AIR FEED

PACIFIC VERSION

Shown on sheets 3 of 4 & 4 of 4
(Atlantic version shown on sheets 1 of 4 & 2 of 4)

THIS DRAWING IS A CONTROLLED DOCUMENT FOR TYCO ELECTRONICS CORPORATION
IT IS SUBJECT TO CHANGE AND THE CONTROLLING ENGINEERING ORGANIZATION
SHOULD BE CONTACTED FOR THE LATEST REVISION.

DIMENSIONS: mm

TOLERANCES UNLESS OTHERWISE SPECIFIED:
0 PLC ±-
1 PLC ±-
2 PLC ±-
3 PLC ±-
4 PLC ±-
ANGLES ±-

MATERIAL - -
FINISH - -

DWN	BOB HIGMAN	01JAN2012
CHK	T ELBIN	01JAN2012
APVD	T ELBIN	01JAN2012
PRODUCT SPEC	-	
APPLICATION SPEC	-	
WEIGHT	-	

TE Connectivity
Harrisburg, PA 17105-3608

NAME: Ocean Side Feed Applicator -

SIZE	CAGE CODE	DRAWING NO	RESTRICTED TO
A1	00779	C-2151739	-

Customer Accessible Production Drawing | SCALE 1:2 | SHEET 4 OF 4 | REV E1

AMP 4805 REV 31MAR2000

SHEETS 1 & 2 ARE NOT REQUIRED FOR PACIFIC VERSION