flex

Technical Specification

PKU4217D Series DC-DC Converters Input 36-60 V, Output up to 25A / 260 W	3/28701-BMR675 Rev.B Mar 2025 © Flex

Key Features

- Industry standard low profile 1/16 brick
  33.02 x 22.86 x 11.30 mm (1.3 x 0.9 x 0.44 in)
- High efficiency, typical 96.1% at 48Vin, half load
- 2250 Vdc input to output isolation
- Pre-bias start up
- Optional Baseplate
- Optional SMD version
- Meets safety requirements according to IEC/EN/UL 62368-1
- MTBF 11.80 Million hours

General Characteristics

- Monotonic start-up
- Remote control
- Output over voltage protection
- Over temperature protection
- Over current protection
- Highly automated manufacturing ensures quality
- ISO 9001/14001 certified supplier

Safety Approvals

Design for Environment

Meets requirements in high-temperature lead-free soldering processes.

Contents

Ordering Information 2
General Information 2
Safety Specification 3
Absolute Maximum Ratings 4

Electrical Specification

10.4 V, 25 A / 260 W PKU4217D 5

EMC Specification 9
Operating Information 10
Thermal Consideration 12
Connections 14
Mechanical Information 15
Soldering Information 18
Delivery Information 19
Product Qualification Specification 21

© Flex

Ordering Information

Product program	Output
PKU4217D	10.4 V, 25 A / 260 W

Product number and Packaging

PKU4217D $n_1n_2n_3n_4n_5$					
Options	n_1	n_2	n_3	n_4	n_5
Mounting	o				
Remote Control logic		o			
Baseplate			o		
Lead length				o	
Delivery package information					o

Options	Description	
n_1	SI	Surface mount
	PI	Through hole
n_2		Negative *
	P	Positive
n_3		Open frame*
	HS	Baseplate
n_4		5.33 mm *
	LA	3.69 mm (Pin-cut)
	LB	4.57 mm (Pin-cut)
n_5	/B	Tray
	/C	Tape and Reel (SMD Version)

Example: a through hole mounted with baseplate, positive logic, 4.57mm pin length with tray package would be PKU4217DPIPHSLB/B
Note: The combination of SI and HS is not available.
* Standard variant (i.e. no option selected).

General Information

Reliability

The failure rate (λ) and mean time between failures (MTBF= 1/λ) is calculated at max output power and an operating ambient temperature (T_A) of +40°C. Flex Power Modules uses Telcordia SR-332 Issue 4 Method 1 to calculate the mean steady-state failure rate and standard deviation (σ).

Telcordia SR-332 Issue 4 also provides techniques to estimate the upper confidence levels of failure rates based on the mean and standard deviation.

Mean steady-state failure rate,	Std. deviation, σ
85 nFailures/h	7.6 nFailures/h

MTBF (mean value) for the PKU4217D series = 11.80 Mh.
MTBF at 90% confidence level = 10.59 Mh

Compatibility with RoHS requirements

The products are compatible with the relevant clauses and requirements of the RoHS directive 2011/65/EU and have a maximum concentration value of 0.1% by weight in homogeneous materials for lead, mercury, hexavalent chromium, PBB and PBDE and of 0.01% by weight in homogeneous materials for cadmium.

Exemptions in the RoHS directive utilized in Flex Power Modules products are found in the Statement of Compliance document.

Flex Power Modules fulfills and will continuously fulfill all its obligations under regulation (EC) No 1907/2006 concerning the registration, evaluation, authorization and restriction of chemicals (REACH) as they enter into force and is through product materials declarations preparing for the obligations to communicate information on substances in the products.

Quality Statement

The products are designed and manufactured in an industrial environment where quality systems and methods like ISO 9000, Six Sigma, and SPC are intensively in use to boost the continuous improvements strategy. Infant mortality or early failures in the products are screened out and they are subjected to an ATE-based final test. Conservative design rules, design reviews and product qualifications, plus the high competence of an engaged work force, contribute to the high quality of the products.

Warranty

Warranty period and conditions are defined in Flex Power Modules General Terms and Conditions of Sale.

Limitation of Liability

Flex Power Modules does not make any other warranties, expressed or implied including any warranty of merchantability or fitness for a particular purpose (including, but not limited to, use in life support applications, where malfunctions of product can cause injury to a person's health or life).

© Flex 2019

The information and specifications in this technical specification is believed to be correct at the time of publication. However, no liability is accepted for inaccuracies, printing errors or for any consequences thereof. Flex reserves the right to change the contents of this technical specification at any time without prior notice.

© Flex

Safety Specification

General information

Flex Power DC/DC converters and DC/DC regulators are designed in accordance with the safety standards IEC 62368-1, EN 62368-1 and UL 62368-1 *Audio/video, information and communication technology equipment - Part 1: Safety requirements*

IEC/EN/UL 62368-1 contains requirements to prevent injury or damage due to the following hazards:

- Electrical shock
- Electrically-caused fire
- Injury caused by hazardous substances
- Mechanically-caused injury
- Skin burn
- Radiation-caused injury

On-board DC/DC converters, Power interface modules and DC/DC regulators are defined as component power supplies. As components they cannot fully comply with the provisions of any safety requirements without “conditions of acceptability”. Clearance between conductors and between conductive parts of the component power supply and conductors on the board in the final product must meet the applicable safety requirements. Certain conditions of acceptability apply for component power supplies with limited stand-off (see Mechanical Information for further information). It is the responsibility of the installer to ensure that the final product housing these components complies with the requirements of all applicable safety standards and regulations for the final product.

Component power supplies for general use shall comply with the requirements in IEC/EN/UL 62368-1. Product related standards, e.g. IEEE 802.3af *Power over Ethernet*, and ETS-300132-2 *Power interface at the input to telecom equipment, operated by direct current (dc)* are based on IEC/EN/UL 62368-1 with regards to safety.

Flex Power DC/DC converters, Power interface modules and DC/DC regulators are UL 62368-1 recognized and certified in accordance with EN 62368-1. The flammability rating for all construction parts of the products meet requirements for V-0 class material according to IEC 60695-11-10, *Fire hazard testing, test flames* – 50 W horizontal and vertical flame test methods.

Isolated DC/DC converters

The product may provide basic or functional insulation between input and output according to IEC/EN/UL 62368-1 (see Safety Certificate), different conditions shall be met if the output of a basic or a functional insulated product shall be considered as ES1 energy source.

For basic insulated products (see Safety Certificate) the output is considered as ES1 energy source if one of the following conditions is met:

- The input source provides supplementary or double or reinforced insulation from the AC mains according to IEC/EN/UL 62368-1.
- The input source provides functional or basic insulation from the AC mains and the product’s output is reliably connected to protective earth according to IEC/EN/UL 62368-1.

For functional insulated products (see Safety Certificate) the output is considered as ES1 energy source if one of the following conditions is met:

- The input source provides double or reinforced insulation from the AC mains according to IEC/EN/UL 62368-1.
- The input source provides basic or supplementary insulation from the AC mains and the product’s output is reliably connected to protective earth according to IEC/EN/UL 62368-1.
- The input source is reliably connected to protective earth and provides basic or supplementary insulation according to IEC/EN/UL 62368-1 and the maximum input source voltage is 60 Vdc.

Galvanic isolation between input and output is verified in an electric strength test and the isolation voltage (V_{iso}) meets the voltage strength requirement for basic insulation according to IEC/EN/UL 62368-1.

It is recommended to use a slow blow fuse at the input of each DC/DC converter. If an input filter is used in the circuit the fuse should be placed in front of the input filter. In the rare event of a component problem that imposes a short circuit on the input source, this fuse will provide the following functions:

- Isolate the fault from the input power source so as not to affect the operation of other parts of the system
- Protect the distribution wiring from excessive current and power loss thus preventing hazardous overheating

© Flex

Absolute Maximum Ratings

Characteristics			min	typ	max	Unit
T_{P1}	Operating Temperature (see Thermal Consideration section)		-40		+125	°C
T_S	Storage temperature		-55		+125	°C
V_I	Input voltage		-0.5		+72	V
C_{out}	Output capacitance		100			µF
V_{iso}	Isolation voltage (input to output test voltage)				2250	Vdc
V_{iso}	Isolation voltage (input to baseplate qualification test voltage)				1500	Vdc
V_{iso}	Isolation voltage (baseplate to output qualification test voltage)				750	Vdc
V_{tr}	Input voltage transient according to ETSI EN 300 132-2 and Telcordia GR-1089-CORE				80	V
V_{RC}	Remote Control pin voltage (see Operating Information section)	Positive logic option	-0.5		6	V
		Negative logic option	-0.5		6	V
V_{adj}	Adjust pin voltage (see Operating Information section)		-0.5		5	V

Stresses above those listed under Absolute Maximum Ratings may cause permanent damage to the device. This is a stress rating only; functional operation of the device at these or any other conditions above those indicated in the Electrical Specification section of this specification is not implied. Exposure to absolute maximum rating conditions for extended periods may affect device reliability.

Fundamental Circuit Diagram

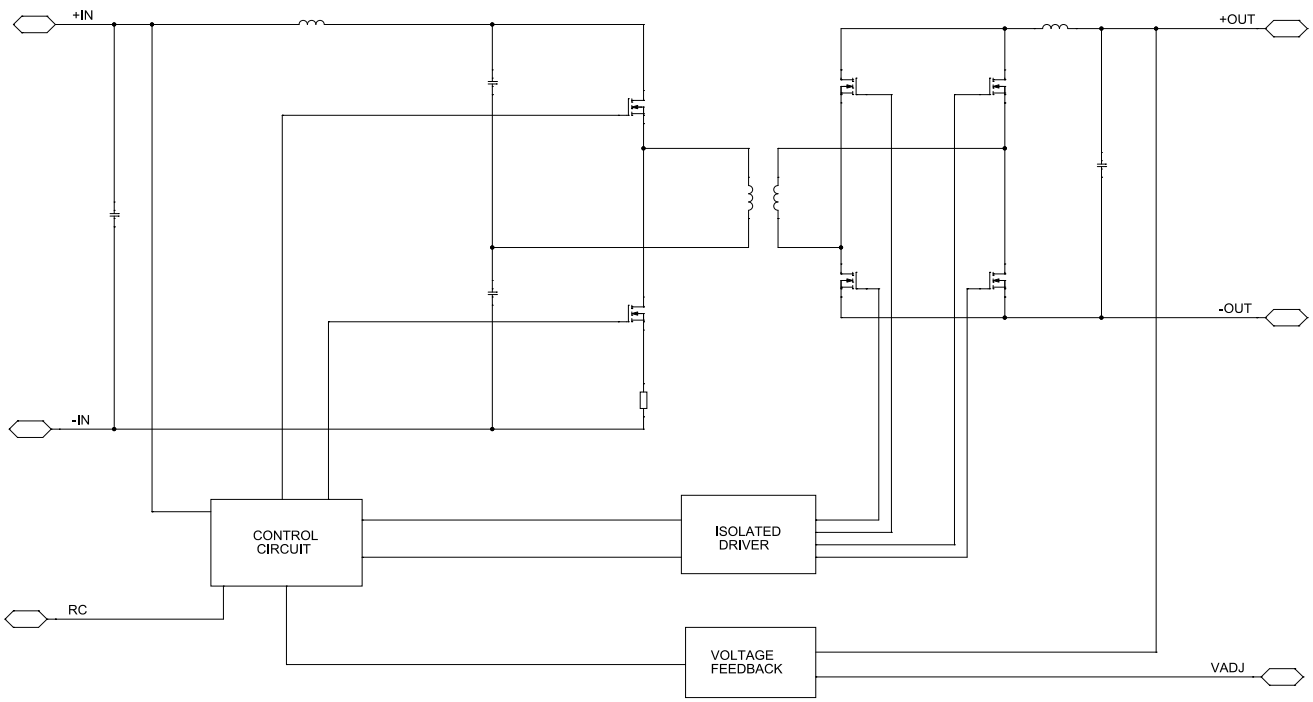

© Flex

Electrical Specification
10.4 V, 25 A / 260 W

PKU4217D

T_{P1} = -40 to +95ºC, V_I = 36 to 60 V, unless otherwise specified under Conditions.
Typical values given at: T_{P1} = +25°C, V_I = 53 V max I_O, unless otherwise specified under Conditions.
Additional C_{in} = 100 µF, C_{out} = 100 µF. See Operating Information section for selection of capacitor types.

Characteristics		Conditions	min	typ	max	Unit
V_I	Input voltage range		36		60	V
V_{Ioff}	Turn-off input voltage	Decreasing input voltage	31	32	34	V
V_{Ion}	Turn-on input voltage	Increasing input voltage	34	35	36	V
C_I	Internal input capacitance	V_I = 53 V		3		µF
P_O	Output power	V_I = 48-60 V	0		260	W
η	Efficiency	50% of max I_O		95.9		%
		max I_O		95.3		
		50% of max I_O, V_I = 48 V		96.1		
		max I_O, V_I = 48 V		95.3		
P_d	Power Dissipation	max I_O		12.8	15.6	W
P_{li}	Input idling power	I_O = 0 A, V_I = 53 V		2.5		W
P_{RC}	Input standby power	V_I = 53 V (turned off with RC)		0.5		W
f_s	Switching frequency	0-100 % of max I_O	462	500	538	kHz

V_{Oi}	Output voltage initial setting and accuracy	T_{P1} = +25°C, V_I = 53 V, I_O = 25 A	10.19	10.4	10.61	V
V_O	Output adjust range	See operating information	-10		5	%
	Output voltage tolerance band	0-100% of max I_O V_I = 48-60 V	10.09		10.71	V
	Idling voltage	I_O = 0 A, V_I = 48-60 V	10.09		10.71	V
	Line regulation	V_I = 48-60 V, max I_O		17	80	mV
	Load regulation	V_I = 53 V, 0-100% of max I_O		5	30	mV
V_{tr}	Load transient voltage deviation	V_I = 53 V, Load step 25-75-25% of max I_O, di/dt = 1 A/µs, C_{out} = 1 mF		±200	300	mV
t_{tr}	Load transient recovery time			100	150	µs
t_r	Ramp-up time (from 10−90% of V_{Oi})	10-100% of max I_O		19	26	ms
t_s	Start-up time (from V_I connection to 90% of V_{Oi})			26	35	ms
t_{RC}	RC start-up time (from V_{RC} connection to 90% of V_{Oi})	max I_O		26	35	ms
RC	Sink current, see Note 1	See operating information	0.5			mA
	Trigger level	Decreasing / Increasing RC-voltage		1.5 / 2.5		V
	Response time		0.1		0.5	ms
I_O	Output current	see Note 4	0		25	A
I_{lim}	Current limit threshold	T_{P1} < max T_{P1}	26	34	43	A
I_{sc}	Short circuit current	T_{P1} = 25ºC, see Note 2		15		A
C_{out}	Recommended Capacitive Load	T_{P1} = 25ºC, see Note 3	100		10000	µF
V_{Oac}	Output ripple & noise	See ripple & noise section, V_{Oi}		50	120	mVp-p
OVP	Over voltage protection	T_{P1} = +25°C, V_I = 53 V, 50% of max I_O		12.5		V

Note 1: Sink current drawn by external device connected to the RC pin

Note 2: RMS current at OCP in hiccup mode

Note 3: Low ESR value

Note 4: The minimum load 0.2 A, minimum duration time 5ms is needed to enable synchronous rectified mode after start-up (The typical values given at Ta=+25°C, Vin=48V). The load can be relaxed to 0 A once the converter has entered synchronous rectified mode

© Flex

Typical Characteristics
10.4 V, 25 A / 260 W

PKU4217D

Efficiency

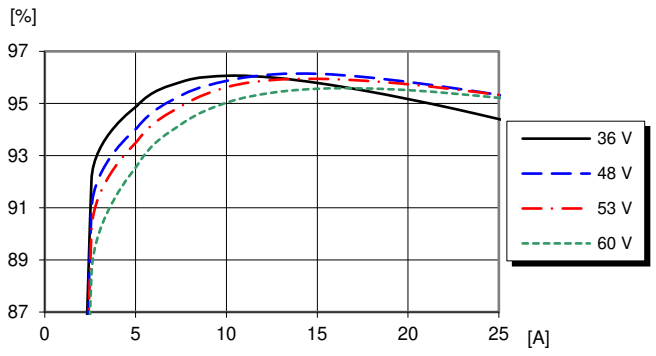

Efficiency vs. load current and input voltage at T_{P1} = +25°C.

Power Dissipation

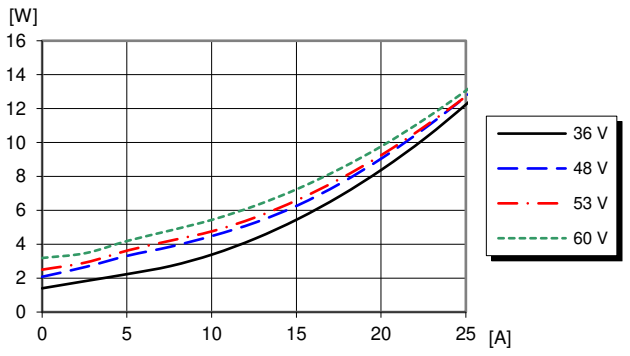

Dissipated power vs. load current and input voltage at T_{P1} = +25°C.

Output Characteristics

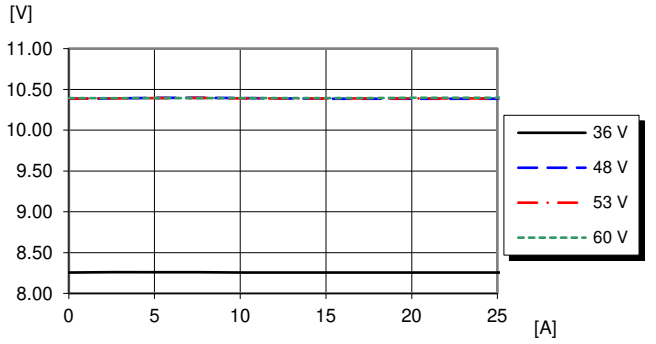

Output voltage vs. load current at T_{P1} = +25°C.

Output Characteristics

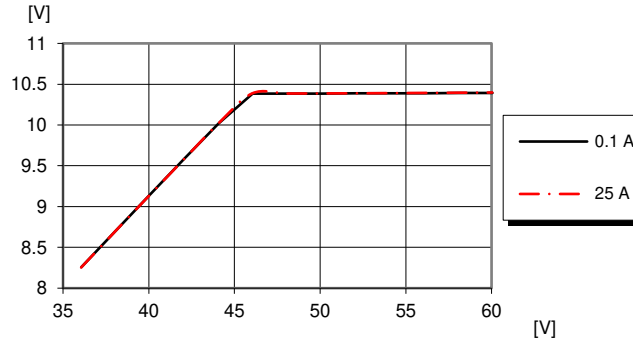

Output voltage vs. input voltage and load current at T_{P1} = +25°C.

Current Limit Characteristics

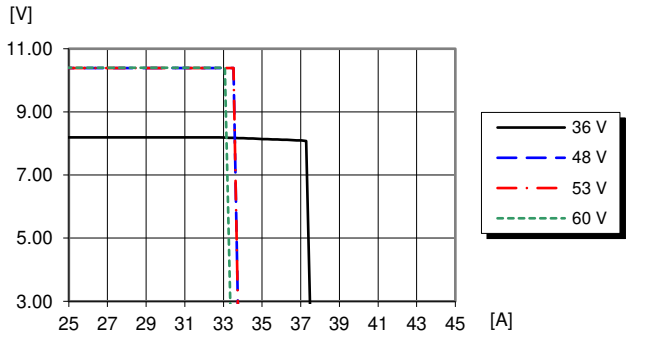

Output voltage vs. load current at I_O > max I_O, T_{P1} = +25°C.

Available Power

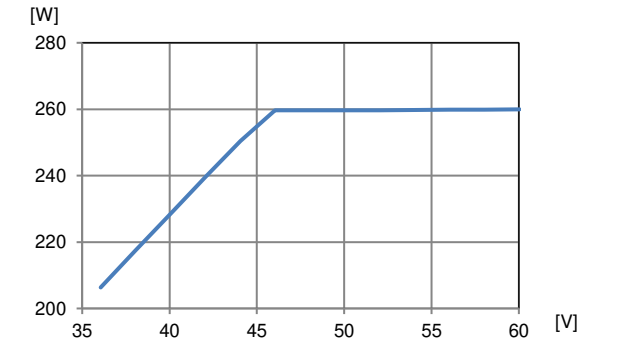

Output power vs. input voltage at T_{P1} = +25°C.

© Flex

Typical Characteristics
10.4 V, 25 A / 260 W

PKU4217D

Start-up

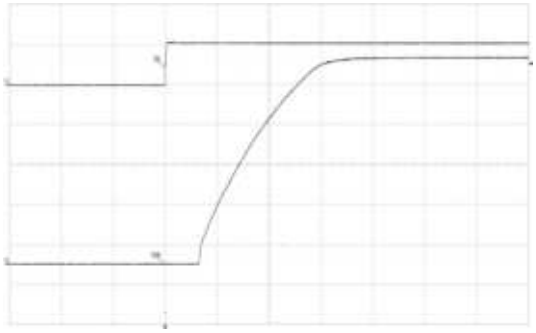

Start-up enabled by connecting V_I at:
T_{P1} = +25°C, V_I = 53 V,
I_O = 25 A resistive load.

Top trace: Input voltage (50 V/div.).
Bottom trace: Output voltage (2 V/div.).
Time scale: (10 ms/div.).

Shut-down

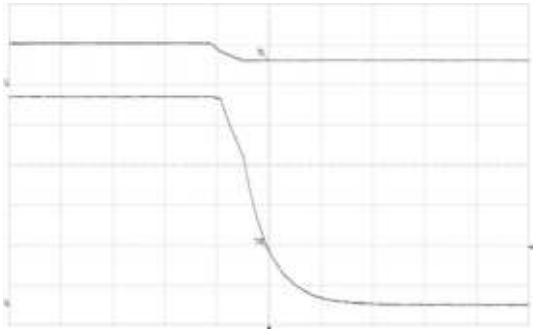

Shut-down enabled by disconnecting V_I at:
T_{P1} = +25°C, V_I = 53 V,
I_O = 25 A resistive load.

Top trace: Input voltage (50 V/div.).
Bottom trace: Output voltage (2 V/div.).
Time scale: (1 ms/div.).

Output Ripple & Noise

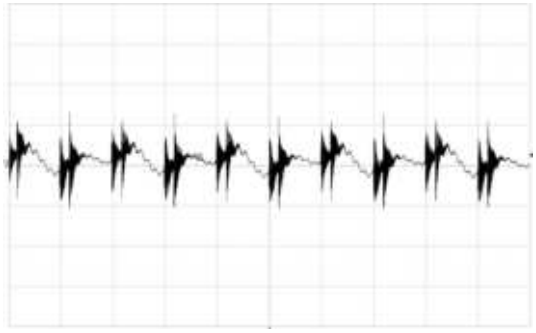

Output voltage ripple at:
T_{P1} = +25°C, V_I = 53 V,
I_O = 25 A resistive load.

Trace: output voltage (20 mV/div.).
Time scale: (2 µs/div.).
20 MHz bandwidth filter 10 µF+0.1 µF

Output Load Transient Response

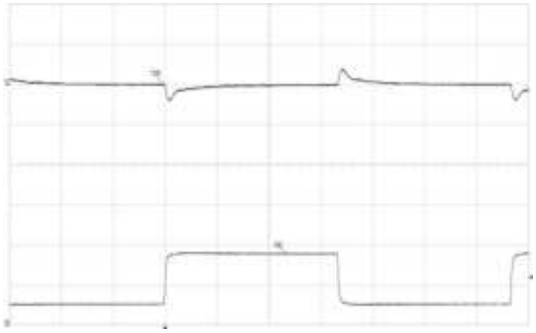

Output voltage response to load current step-change (6.25 – 18.75 – 6.25 A) at:
T_{P1} =+25°C, V_I = 53 V.

Top trace: Output voltage (0.5 V/div.).
Bottom trace: Output current (10 A/div.).
Time scale: (0.5 ms/div.).

Output Voltage Adjust (see operating information)

The resistor value for an adjusted output voltage is calculated by using the following equations:

Output Voltage Adjust Upwards, Increase:

$$Radj = 5.11 \times \left(\frac{10.4(100+\Delta\%)}{1.225 \times \Delta\%} - \frac{(100+2\times\Delta\%)}{\Delta\%} \right) \text{ k}\Omega$$

Example: Increase 4% =>V_{out} = 10.816 Vdc

$$5.11 \times \left(\frac{10.4(100+4)}{1.225 \times 4} - \frac{(100+2\times 4)}{4} \right) \text{ k}\Omega = 990 \text{ k}\Omega$$

Output Voltage Adjust Downwards, Decrease:

$$Radj = 5.11 \times \left(\frac{100}{\Delta\%} - 2 \right) \text{ k}\Omega$$

Example: Decrease 2% =>V_{out} = 10.192 Vdc

$$5.11 \times \left(\frac{100}{2} - 2 \right) \text{ k}\Omega = 245 \text{ k}\Omega$$

© Flex

Typical Characteristics
10.4 V, 25 A / 260 W

PKU4217D

Output Current Derating – Open frame

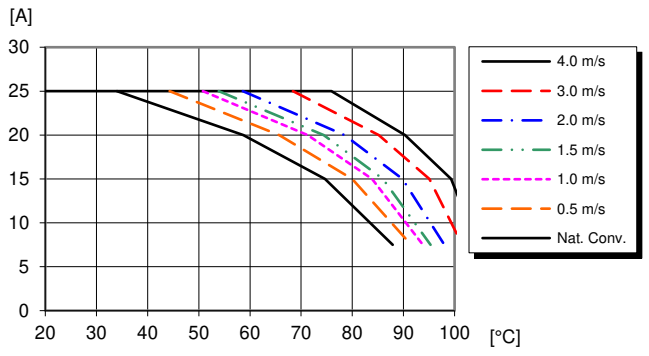

Available load current vs. ambient air temperature and airflow at V_I = 53 V. See Thermal Consideration section.

Output Current Derating – Base plate

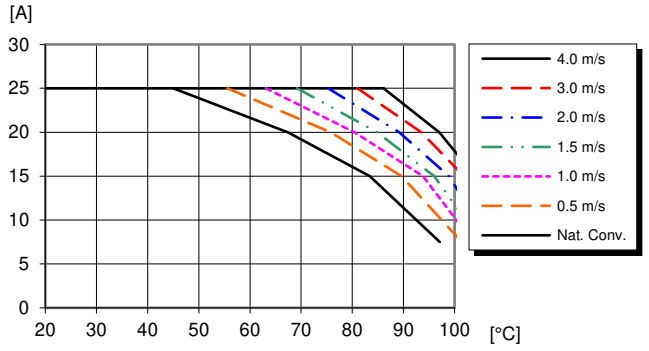

Available load current vs. ambient air temperature and airflow at V_I = 53 V. See Thermal Consideration section.

Thermal Resistance – Base plate

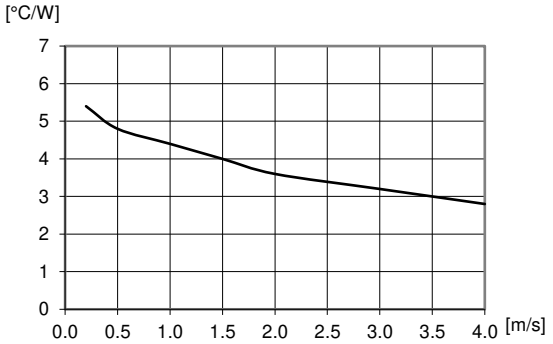

Thermal resistance vs. airspeed measured at the converter. Tested in wind tunnel with airflow and test conditions as per the Thermal consideration section. V_I = 53 V.

Output Current Derating – Cold wall sealed box

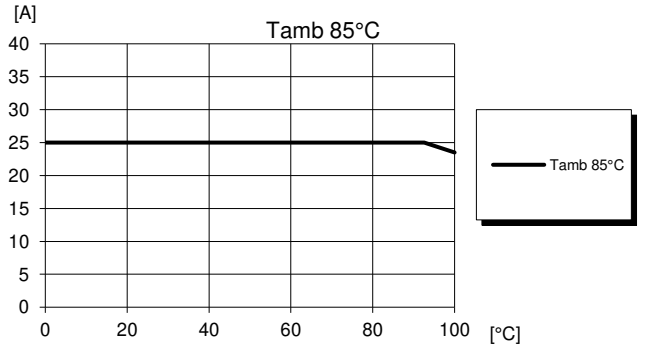

Available load current vs. cold wall temperature.
V_I = 53 V. See Thermal Consideration section.

© Flex

EMC Specification

Conducted EMI measured according to EN 55022/EN 55032, CISPR 22/CISPR 23 and FCC part 15J (see test set-up). See Design Note 029 for further information. The fundamental switching frequency is 500 kHz for PKU4217D. The EMI characteristics below is measured at V_I = 53 V and max I_O.

Conducted EMI Input terminal value (typ)

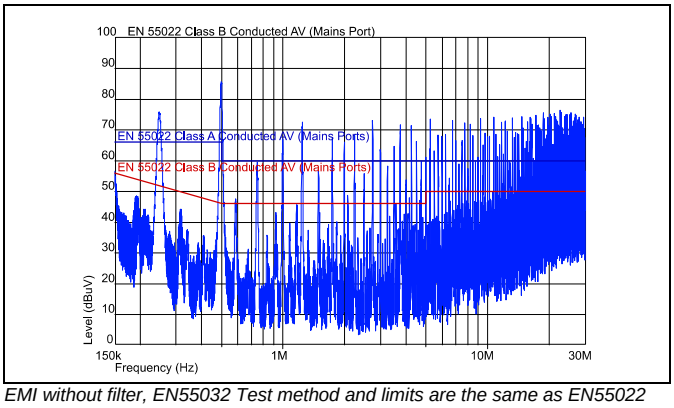

EMI without filter, EN55032 Test method and limits are the same as EN55022

Optional external filter for class B

Suggested external input filter in order to meet class B in EN 55022, CISPR 22 and FCC part 15J.

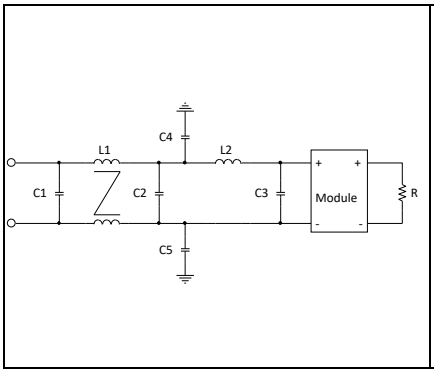

Filter components:
C1 = 2.2 µF
C2 = 2.2 µF
C3 = 2.2 µF + 100 µF (e-lyt)
C4, C5 = 2x10 nF
L1 = 0.59 mH (Pulse P0353NL)
L2 = 2.2 µH (Coilcraft D03316H)

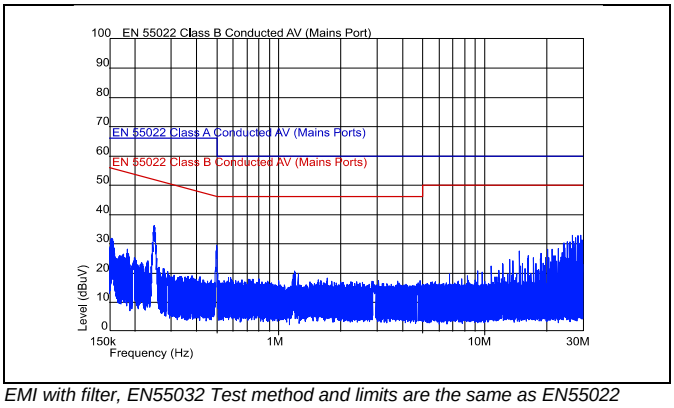

EMI with filter, EN55032 Test method and limits are the same as EN55022

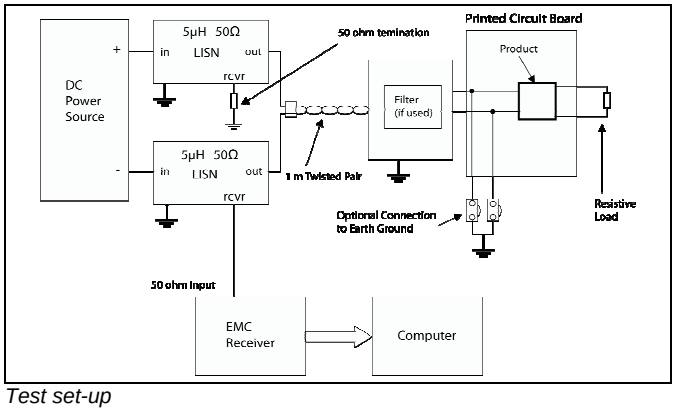

Test set-up

Layout recommendations

The radiated EMI performance of the product will depend on the PWB layout and ground layer design. It is also important to consider the stand-off of the product. If a ground layer is used, it should be connected to the output of the product and to the equipment ground or chassis.

A ground layer will increase the stray capacitance in the PWB and improve the high frequency EMC performance.

Output ripple and noise

Output ripple and noise is measured according to figure below. See Design Note 022 for detailed information.

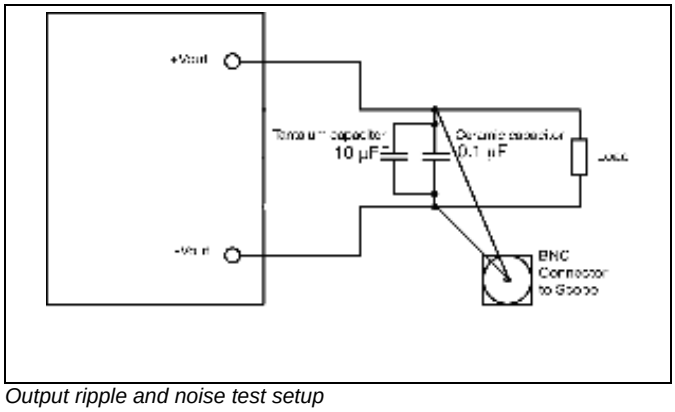

Output ripple and noise test setup

© Flex

Operating information

Input Voltage

The input voltage range 36 to 60 Vdc meets the requirements of the European Telecom Standard ETS 300 132-2 for normal input voltage range in –48 Vdc systems, -40.5 to -57 V.

At input voltages exceeding 60 V, the power loss will be higher than at normal input voltage and T_{P1} must be limited to absolute max +125°C. The absolute maximum continuous input voltage is 72 Vdc

Above 47 V the product operates with normal regulation with constant output voltage and constant maximum power. Below 47 V the output voltage starts to track the input voltage with a fixed proportion, keeping a duty-cycle guard band for regulation. The product operates down below 36 V before the internal under voltage lock out turns off the product.

Short duration transient disturbances can occur on the DC distribution and input of the product when a short circuit fault occurs on the equipment side of a protective device (fuse or circuit breaker). The voltage level, duration and energy of the disturbance are dependent on the particular DC distribution network characteristics and can be sufficient to damage the product unless measures are taken to suppress or absorb this energy. The transient voltage can be limited by capacitors and other energy absorbing devices like Zener diodes connected across the positive and negative input conductors at a number of strategic points in the distribution network. The end-user must secure that the transient voltage will not exceed the value stated in the Absolute maximum ratings. ETSI TR 100 283 examines the parameters of DC distribution networks and provides guidelines for controlling the transient and reduce its harmful effect.

Turn-off Input Voltage

The products monitor the input voltage and will turn on and turn off at predetermined levels. The minimum hysteresis between turn on and turn off input voltage is 2.5 V.

Remote Control (RC)

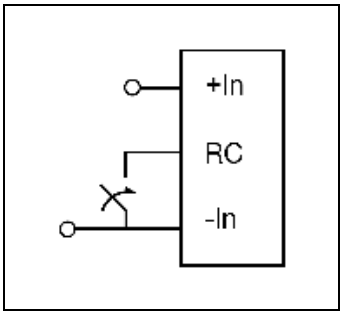

The products are fitted with a remote control function referenced to the primary negative input connection (-In), with negative and positive logic options available. The RC function allows the product to be turned on/off by an external device like a semiconductor or mechanical switch.

The RC pin has an internal pull up resistor of 10 kΩ to +5V. The external device must provide a minimum required sink current to guarantee a voltage not higher than maximum voltage on the RC pin (see Electrical characteristics table).

When the RC pin is left open, the voltage generated on the RC pin is 5 V.

The standard product is provided with “negative logic” RC. To turn off the product the RC pin should be left open, or connected to a voltage higher than 4 V referenced to -In.
In situations where it is desired to have the product to power up automatically without the need for control signals or a switch, the RC pin can be wired directly to –In. To turn on the product the RC pin should be lower than 1V referenced to –In.

The second option is “positive logic” remote control, which can be ordered by adding the suffix “P” to the end of the part number. When the RC pin is left open, the product starts up automatically when the input voltage is applied. Turn off is achieved by connecting the RC pin to the –In, or a voltage lower than 1V referenced to -In. The product will restart automatically when this connection is opened.

The RC function incorporates a short delay in order to not trigger on glitches. Typically, this filter has a settling time of 0.1-0.5 ms. This setup reduces the risk that the noise may cause the converter to shut down or power up accidently. See Design Note 021 for detailed information.

Input and Output Impedance

The impedance of both the input source and the load will interact with the impedance of the product. It is important that the input source has low characteristic impedance. The products are designed for stable operation with a minimum of 100 µF external capacitors connected to the input. The electrolytic capacitors will be degraded in low temperature and the ESR value may increase. The needed input capacitance in low temperature should be equivalent to 100 µF at 20° C. This means that the input capacitor value may need to be substantially larger to guarantee a stable input at low temperatures. The performance in some applications can be enhanced by addition of external capacitance as described under External Decoupling Capacitors. The minimum required capacitance value depends on the output power and the input voltage. The higher output power the higher input capacitance is needed.

External Decoupling Capacitors

When powering loads with significant dynamic current requirements, the voltage regulation at the load can be improved by addition of decoupling capacitors at the load. The most effective technique is to locate low ESR ceramic and electrolytic capacitors as close to the load as possible, using several parallel capacitors to lower the effective ESR. The ceramic capacitors will handle high-frequency dynamic load changes while the electrolytic capacitors are used to handle low frequency dynamic load changes. It is equally important to use low resistance and low inductance PWB layouts and cabling.

External decoupling capacitors will become part of the product’s control loop. The control loop is optimized for a wide

© Flex

range of external capacitance and the maximum and minimum recommended value that could be used without any additional analysis is found in the Electrical specification. The ESR of the capacitors is a very important parameter. Stable operation is guaranteed with a verified ESR value of >1 mΩ across the output connections.

For further information please contact your local Flex Power Modules representative.

Output Voltage Adjust (V_{adj})
The products have an Output Voltage Adjust pin (V_{adj}). This pin can be used to adjust the output voltage above or below Output voltage initial setting.

When increasing the output voltage, the voltage at the output pins must be kept below the threshold of the over voltage protection (OVP). At increased output voltages the maximum power rating of the product remains the same, and the max output current must be decreased correspondingly. At minimum input voltage the output voltage adjust range may be decreased depending on load, temperature and HRR. It is only possible to adjust the output voltage upwords if the input voltage is 48V or higher. At lower input voltages below 48V the HRR function will make the output voltage decrease (see HRR information).

To increase the output voltage a resistor should be connected between the V_{adj} pin and +Out pin. The value of the adjust resistor should be calculated according to the formulas provided in the Electrical Specification section for the respective product.
To decrease the output voltage, the resistor should be connected between the V_{adj} pin and –Out pin.

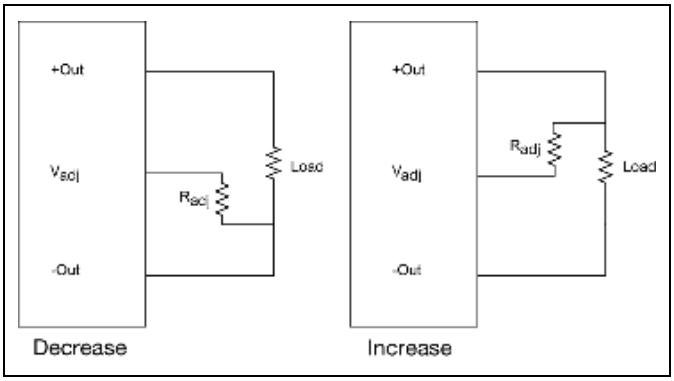

Hybrid Regulated Ratio (HRR)
The product uses two regulation modes. The regulated ratio mode let the regulator track the Vin with a fixed proportion, still with a guard band for load and transient regulation. The hybrid regulated mode swaps seamlessly from a ratio regulated mode to a normally regulated mode above a certain input voltage. See Output Characteristics in the Electrical Specification. HRR uses a fast adaption system and a slow adaption system to react to both fast and slow input voltage changes to provide an input voltage feed-forward function.

The fast adaption system prevents the converter to change output voltage very rapid. It filters sudden input voltage changes. The slow adaption system does not let fast input voltage transients through in the regulated ratio mode, it just slowly adapts to the new input voltage. When the input voltage changes the tracking-system needs up to 3 ms to fully respond.
In the normally regulated mode the tracking will be saturated, and the converter regulates towards a precision reference voltage instead making it almost unsusceptible to transients.

Controlled output capacitor charge-current at input voltage step
Due to the slow adaption system the HRR product efficiently reduces those charge currents for the external capacitors during an input voltage transient or level shift.

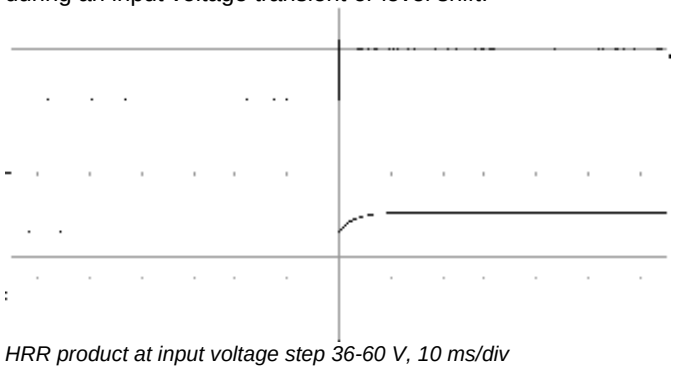

HRR product at input voltage step 36-60 V, 10 ms/div
Bottom trace – resulting output voltage change, 5 V/div
Top trace – input voltage change from 36 V to 60 V, 20 V/div

Input voltage transient suppression

The hybrid regulated product effectively suppresses input voltage transients. This applies to both short duration transients and step-like level shifts of the input voltage.
In case of a step-like level shift of the input voltage, the output voltage will rise to a new regulated ratio output voltage or to 10.4 V depending of the final value of the input voltage step. The hybrid regulated ratio prevents overshoots and undershoots in association with this transition. These capabilities significantly reduce the requirements on input transient response of Point of Load regulators fed from this product.

Parallel Operation

This product is not designed for paralleling without using external current sharing circuits. See Design Note 006 for detailed information.

Over Temperature Protection (OTP)
The products are protected from thermal overload by an internal over temperature shutdown circuit.
When T_{P1} as defined in thermal consideration section exceeds 130°C the product will shut down. The product will make continuous attempts to start up (non-latching mode) and resume normal operation automatically when the temperature has dropped >10°C below the temperature threshold.

© Flex

Over Voltage Protection (OVP)

The products have output over voltage protection that will limit the output voltage in an over voltage situation. The product will resume normal operation automatically after removal of the over voltage condition. However, at certain conditions the output voltage can be limited to a lower output voltage than the stated OVP level, for example at low input voltage or high output current.

Over Current Protection (OCP)

The products include current limiting circuitry for protection at continuous overload. The OCP works in a hiccup mode and will make continous attempts to start up and will resume normal operation automatically after removal of the over current condition. The load distribution should be designed for the specified maximum output short circuit current.

Pre-bias Start-up

The product has a Pre-bias start up functionality and will not sink current during start up if a pre-bias load is present at the output terminals. This product use a controller with an improved protection feature that can sense if a negative current are running trough the module. The controller will also stop transfering energy to the secondary side if the output is fully charged. If no load is present during start-up and the output capacitor is very small, the controller will not fully ramp in the syncronized rectifiers on the secondary side. The syncronized rectifiers will start switching as soon as any load appears on the output.

Thermal Consideration

General

The products are designed to operate in different thermal environments and sufficient cooling must be provided to ensure reliable operation.

For products mounted on a PWB without a baseplate attached, cooling is achieved mainly by conduction from the pins to the host board, and convection, which is dependent on the airflow across the product. Increased airflow enhances the cooling of the product. The Output Current Derating graph found in the Output section for each model provides the available output current vs. ambient air temperature and air velocity at V_I = 53 V.

The product is tested on a 254 x 254 mm, 35 µm (1 oz), 16-layer test board mounted vertically in a wind tunnel with a cross-section of 608 x 203 mm.

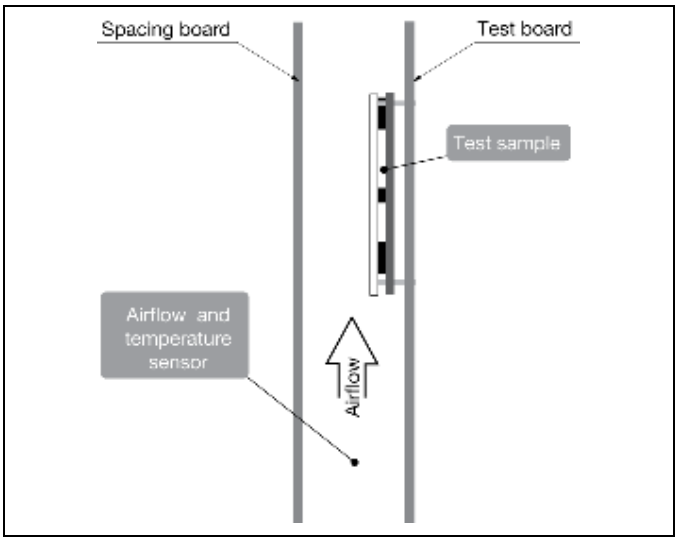

For products with baseplate used in a sealed box/cold wall application, cooling is achieved mainly by conduction through the cold wall. The Output Current Derating graphs are found in the Output section for each model. The product performance has been tested in a sealed box presented in the figure below. The ambient temperature (inside the box) has been set to 85°C. The cold wall temperature varied. See Design Note 028 for further details.

© Flex

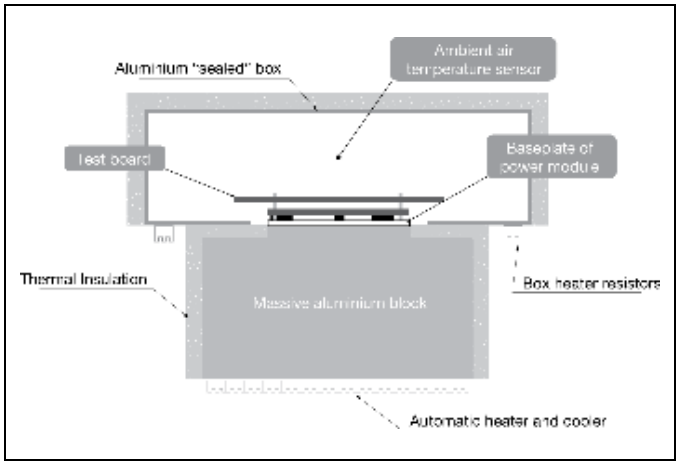

Definition of product operating temperature

The temperature at the positions (T_{P1}, T_{P2}, T_{P3}) should not exceed the maximum temperatures in the table below. The number of measurement points may vary with different thermal design and topology. Temperatures above maximum measured at the reference point P1, P2 are not allowed and may cause permanent damage.

Position	Description	Max Temp.
P1	Output Inductor	T_{P1}=125º C
P2	MOSFET	T_{P2}=125º C
P3	PWB (baseplate module)	T_{P2}=125º C

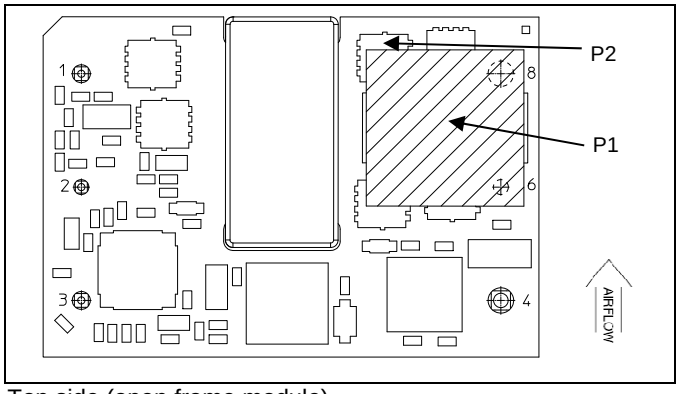

Top side (open frame module)

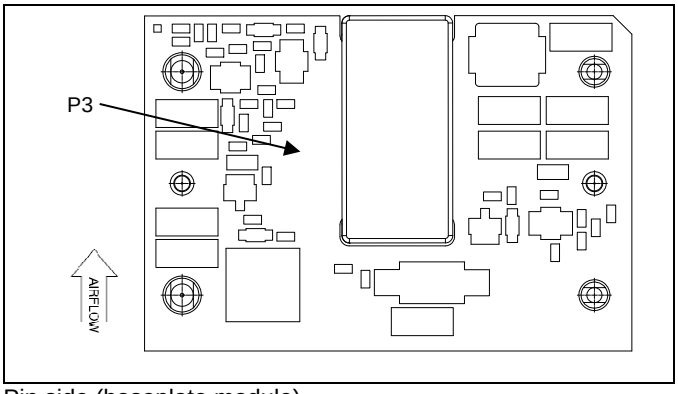

Pin side (baseplate module)

Ambient Temperature Calculation

For products with base plate the maximum allowed ambient temperature can be calculated by using the thermal resistance.

1. The power loss is calculated by using the formula
((1/η) - 1) × output power = power losses (Pd).
η = efficiency of product. E.g. 95% = 0.95

2. Find the thermal resistance (Rth) in the Thermal Resistance graph found in the Output section for each model. ***Note that the thermal resistance can be significantly reduced if a heat sink is mounted on the top of the base plate.***

Calculate the temperature increase (ΔT).
ΔT = Rth x Pd

3. Max allowed ambient temperature is:
Max T_{P1} - ΔT.

E.g. PKU4217D at 1m/s:

1. $\left(\left(\frac{1}{0.95}\right) - 1\right) \times 260\ W = 13.7\ W$

2. 13.7 W × 4.3°C/W = 58.9°C

3. 125°C – 58.9°C = max ambient temperature is 66.1°C

The actual temperature will be dependent on several factors such as the PWB size, number of layers and direction of airflow.

© Flex

Connections

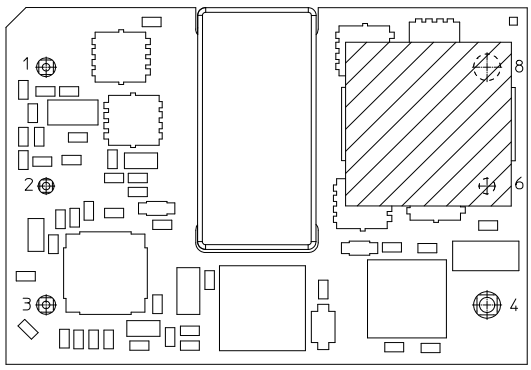

Pin	Designation	Function
1	+In	Positive Input
2	RC	Remote Control
3	-In	Negative Input
4	-Out	Negative Output
6	Vadj	Output Voltage adjust
8	+Out	Positive Output

© Flex

Mechanical Information - PKU4217DPI Hole Mount, Open Frame Version

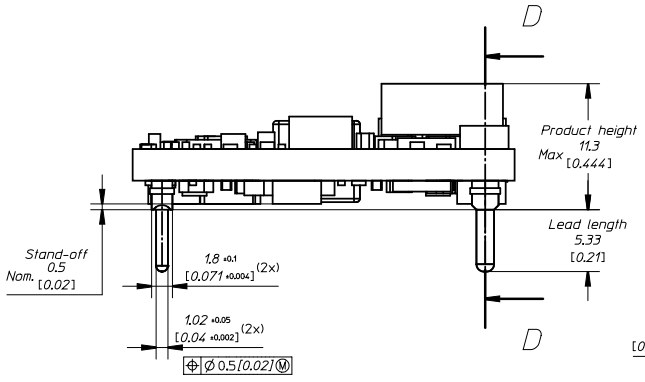

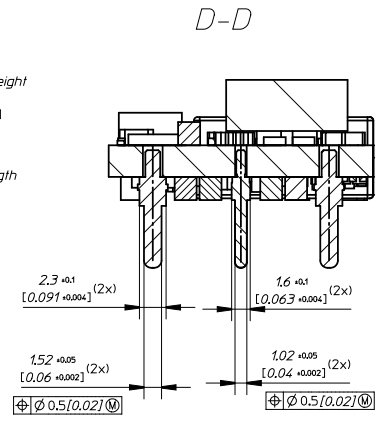

TOP VIEW
Pin positions according to recommended footprint

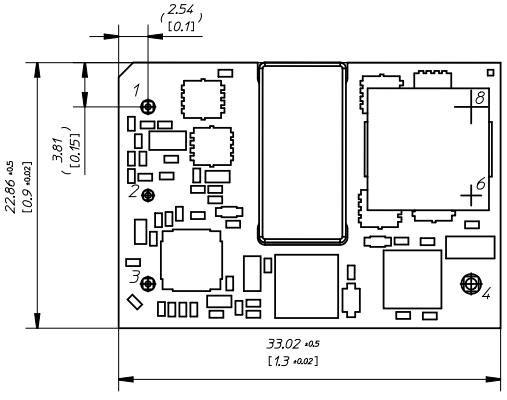

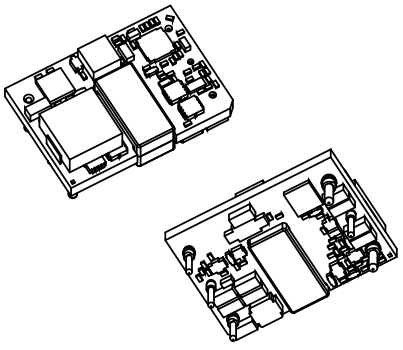

PIN SPECIFICATIONS
Pin Material: Copper alloy
Plating: Min Au 0.1 µm over 1-m µm Ni

Recommended hole dimensions are only for reference. It's the end users decision based on different situations like production processes. substrate thickness etc.

RECOMMENDED FOOTPRINT - TOP VIEW

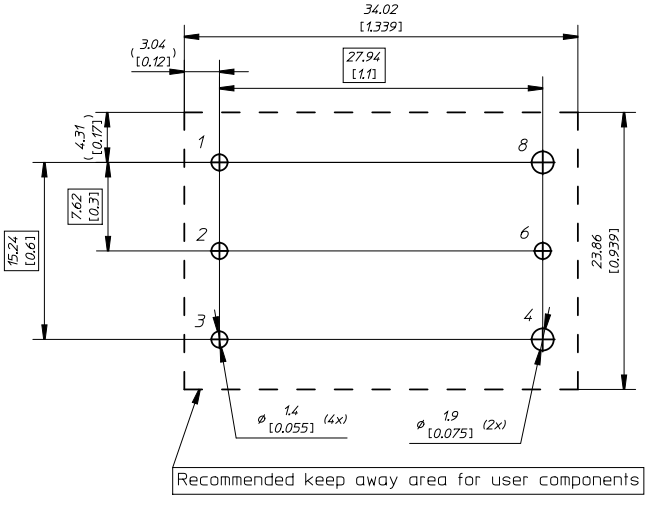

Typical weight 15.5g
All dimensions in mm [inch]
Tolerances unless specified:
x.x ±0.5 [0.02]
x.xx±0.25 [0.01]
(Not applied on footprint or typical values)

All component placements – whether shown as physical components or symbolical outline – are for reference only and are subject to change throughout the product's life cycle, unless explicitly described and dimensioned in this drawing.

© Flex

Mechanical Information - PKU4217DSI Surface Mount Version

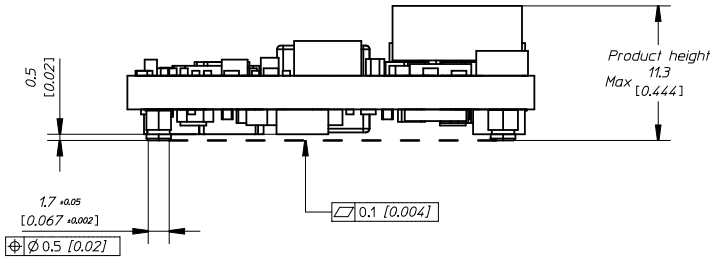

TOP VIEW

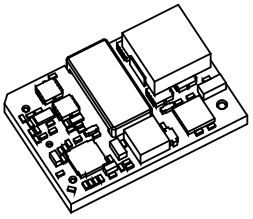

Pin position according to the recommended footprint

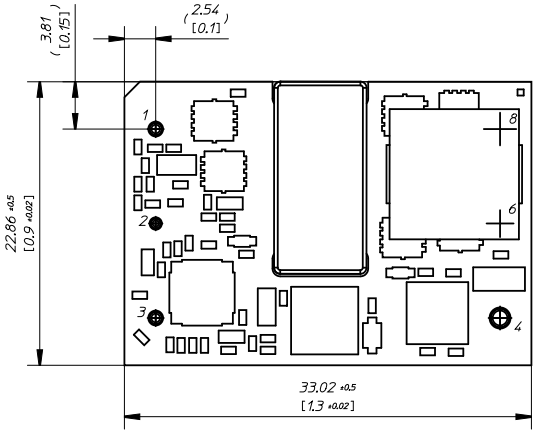

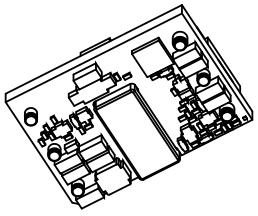

PIN SPECIFICATIONS
Pin Material: Copper alloy
Plating: Min Au 0.1 µm over 1-m µm Ni

Recommended hole dimensions are only for reference. It's the end users decision based on different situations like production processes. substrate thickness etc.

RECOMMENDED FOOTPRINT - TOP VIEW

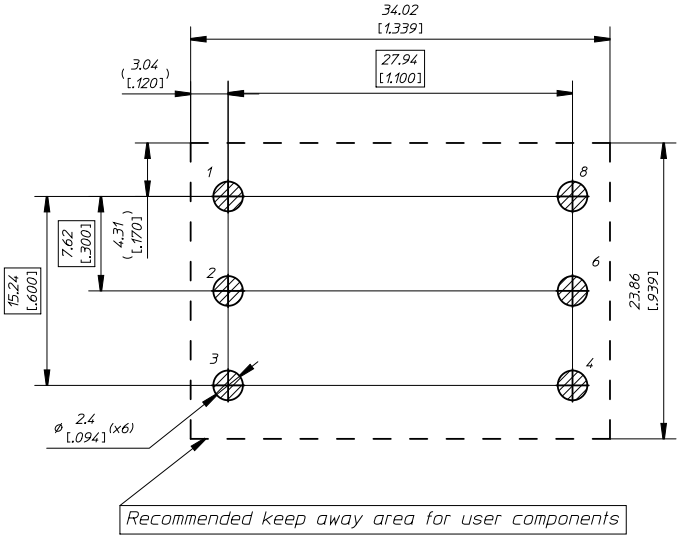

All dimensions in mm [inch]
Tolerances unless specified:
x.x ±0.5 [0.02]
x.xx±0.25 [0.01]

All component placements – whether shown as physical components or symbolical outline – are for reference only and are subject to change throughout the product's life cycle, unless explicitly described and dimensioned in this drawing.

© Flex

Mechanical Information - PKU4217DPIHS Base Plate Version

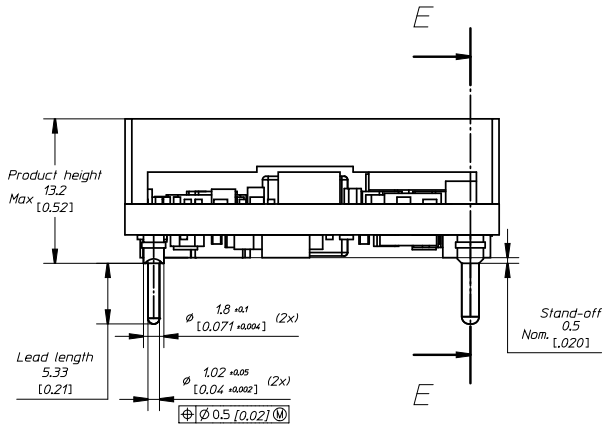

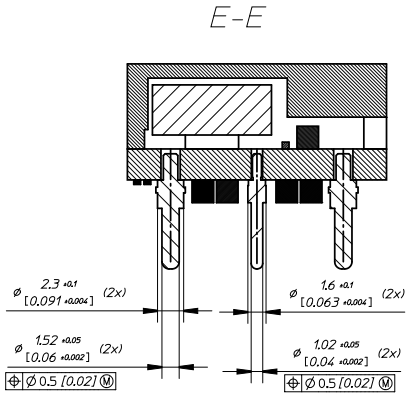

TOP VIEW

Pin position according to the recommended footprint

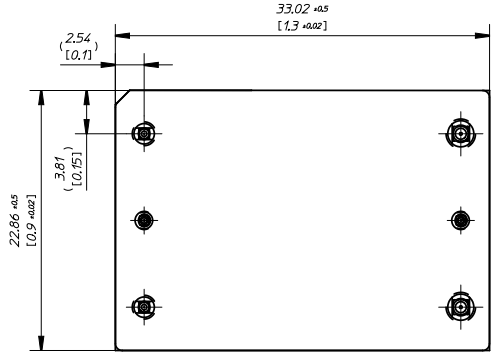

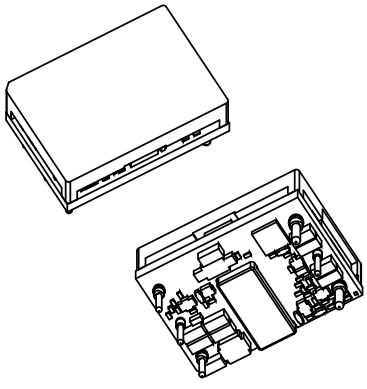

RECOMMENDED FOOTPRINT - TOP VIEW

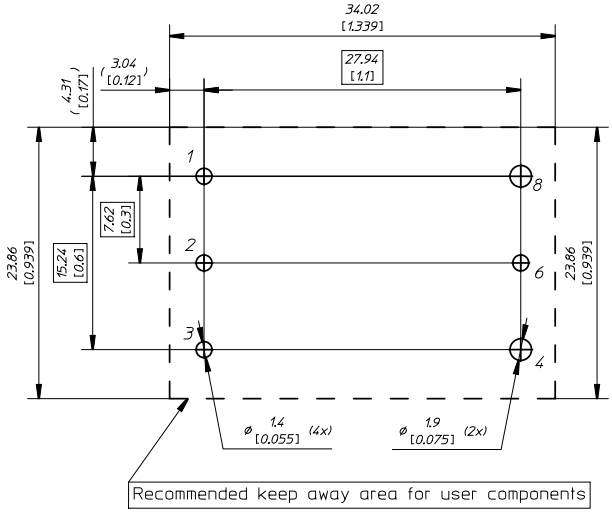

Pin 1-8 Material: Copper alloy
Plating: Min 0.1 µm Au over 1-3 µm Ni

Recommended hole dimensions are only for reference. It is the end users decision based on different situations like production processes, substrate thickness etc.

CASE
Material: Aluminium

Weight Typical 26g
All dimensions in mm [inch]
Tolerances unless specified:
x.x ±0.5 [0.02]
x.xx±0.25 [0.25]

All component placements – whether shown as physical components or symbolical outline – are for reference only and are subject to change throughout the product's life cycle, unless explicitly described and dimensioned in this drawing.

© Flex

Soldering Information - Surface Mounting

The surface mount product is intended for forced convection or vapor phase reflow soldering in SnPb and Pb-free processes.

The reflow profile should be optimised to avoid excessive heating of the product. It is recommended to have a sufficiently extended preheat time to ensure an even temperature across the host PWB and it is also recommended to minimize the time in reflow.

A no-clean flux is recommended to avoid entrapment of cleaning fluids in cavities inside the product or between the product and the host board, since cleaning residues may affect long time reliability and isolation voltage.

General reflow process specifications		SnPb eutectic	Pb-free
Average ramp-up ($T_{PRODUCT}$)		3°C/s max	3°C/s max
Typical solder melting (liquidus) temperature	T_L	183°C	221°C
Minimum reflow time above T_L		60 s	60 s
Minimum pin temperature	T_{PIN}	210°C	235°C
Peak product temperature	$T_{PRODUCT}$	225°C	260°C
Average ramp-down ($T_{PRODUCT}$)		6°C/s max	6°C/s max
Maximum time 25°C to peak		6 minutes	8 minutes

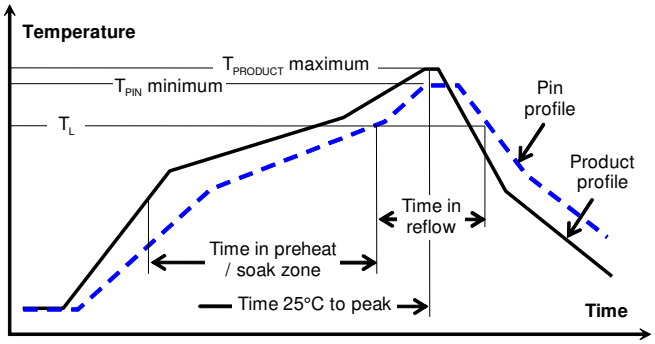

Minimum Pin Temperature Recommendations

Pin number 4 is chosen as reference location for the minimum pin temperature recommendation since this will likely be the coolest solder joint during the reflow process.

SnPb solder processes

For SnPb solder processes, a pin temperature (T_{PIN}) in excess of the solder melting temperature, (T_L, 183°C for Sn63Pb37) for more than 60 seconds and a peak temperature of 220°C is recommended to ensure a reliable solder joint.

For dry packed products only: depending on the type of solder paste and flux system used on the host board, up to a recommended maximum temperature of 245°C could be used, if the products are kept in a controlled environment (dry pack handling and storage) prior to assembly.

ead-free (Pb-free) solder processes

For Pb-free solder processes, a pin temperature (T_{PIN}) in excess of the solder melting temperature (T_L, 217 to 221°C for SnAgCu solder alloys) for more than 60 seconds and a peak temperature of 245°C on all solder joints is recommended to ensure a reliable solder joint.

Maximum Product Temperature Requirements

Top of the product PWB near pin 2 is chosen as reference location for the maximum (peak) allowed product temperature ($T_{PRODUCT}$) since this will likely be the warmest part of the product during the reflow process.

SnPb solder processes

For SnPb solder processes, the product is qualified for MSL 1 according to IPC/JEDEC standard J-STD-020C.

During reflow $T_{PRODUCT}$ must not exceed 225 °C at any time.

Pb-free solder processes

For Pb-free solder processes, the product is qualified for MSL 3 according to IPC/JEDEC standard J-STD-020C.

During reflow $T_{PRODUCT}$ must not exceed 260 °C at any time.

Dry Pack Information

Products intended for Pb-free reflow soldering processes are delivered in standard moisture barrier bags according to IPC/JEDEC standard J-STD-033 (Handling, packing, shipping and use of moisture/reflow sensitivity surface mount devices).

Using products in high temperature Pb-free soldering processes requires dry pack storage and handling. In case the products have been stored in an uncontrolled environment and no longer can be considered dry, the modules must be baked according to J-STD-033.

Thermocoupler Attachment

Top of PWB near pin 2 for measurement of maximum product temperature, $T_{PRODUCT}$

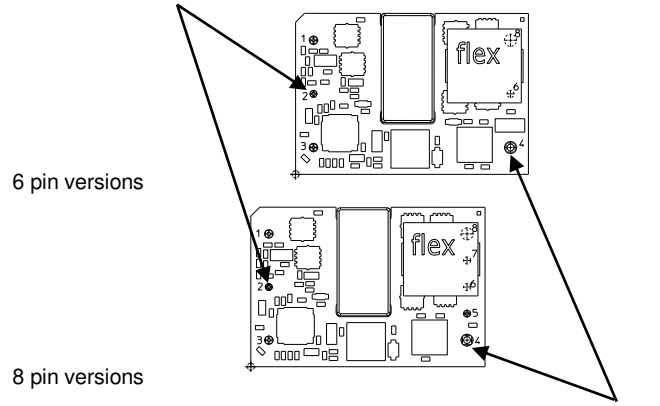

Pin 4 for measurement of minimum pin (solder joint) temperature, T_{PIN}

© Flex

Soldering Information - Hole Mounting

The hole mounted product is intended for plated through hole mounting by wave or manual soldering. The pin temperature is specified to maximum to 270°C for maximum 10 seconds.

A maximum preheat rate of 4°C/s and maximum preheat temperature of 150°C is suggested. When soldering by hand, care should be taken to avoid direct contact between the hot soldering iron tip and the pins for more than a few seconds in order to prevent overheating.

A no-clean flux is recommended to avoid entrapment of cleaning fluids in cavities inside the product or between the product and the host board. The cleaning residues may affect long time reliability and isolation voltage.

Delivery Package Information

The products are delivered in antistatic injection molded trays (Jedec design guide 4.10D standard) and in antistatic trays.

Tray Specifications – All versions	
Material	Antistatic PPE
Surface resistance	10^5 < Ohm/square < 10^{12}
Bakability	The trays can be baked at maximum 125°C for 48 hours
Tray thickness	28 mm 1.1 [inch]
Box capacity	84 products (4 full trays/box)
Tray weight	200 g empty, 750 g full tray (base plate) 530 g full tray (TH/SMD)

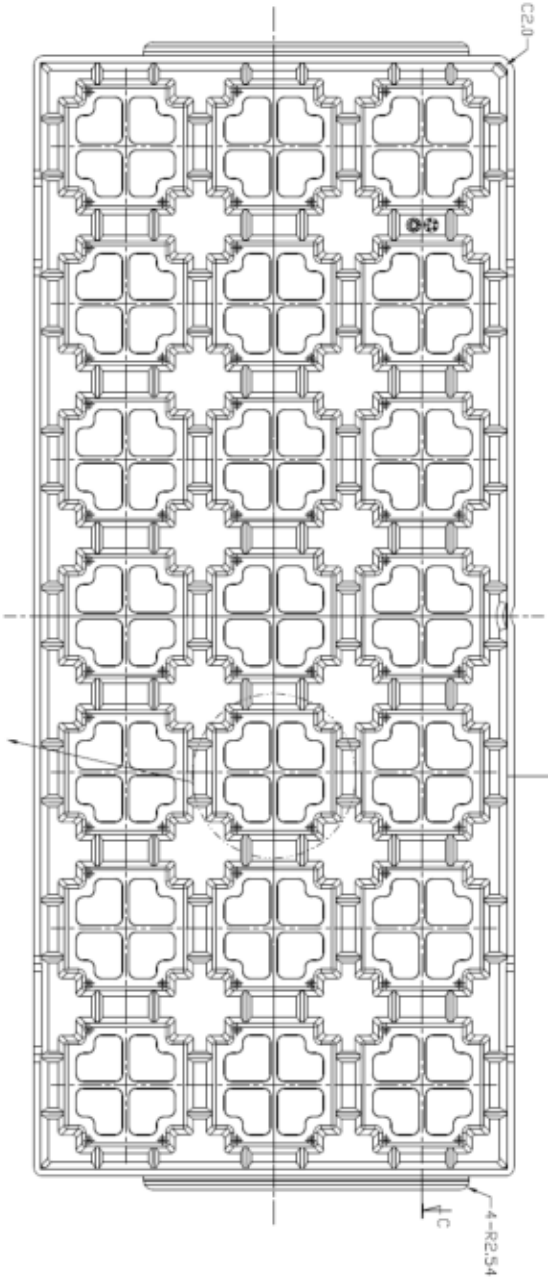

JEDEC standard tray for 2x10 = 20 products.
All dimensions in mm [inch]
Tolerances: X.x ±0.26 [0.01], X.xx ±0.13 [0.005]
Note: pick up positions refer to center of pocket.
See mechanical drawing for exact location on product.

© Flex

Carrier Tape Specifications		
	SMD version	
Material	Antistatic PS	
Surface resistance	10^5 < Ohm/square < 10^{11}	
Bakeability	The tape is not bakable	
Tape width, W	56 mm [2.205 inch]	
Pocket pitch, P_1	32 mm [1.26 inch]	
Pocket depth, K_0	12.35 mm [0.486 inch]	
Reel diameter	330 mm [13 inch]	
Reel capacity	140 products /reel	
Reel weight	2,8 kg/full reel estimate	

EIA standard carrier tape

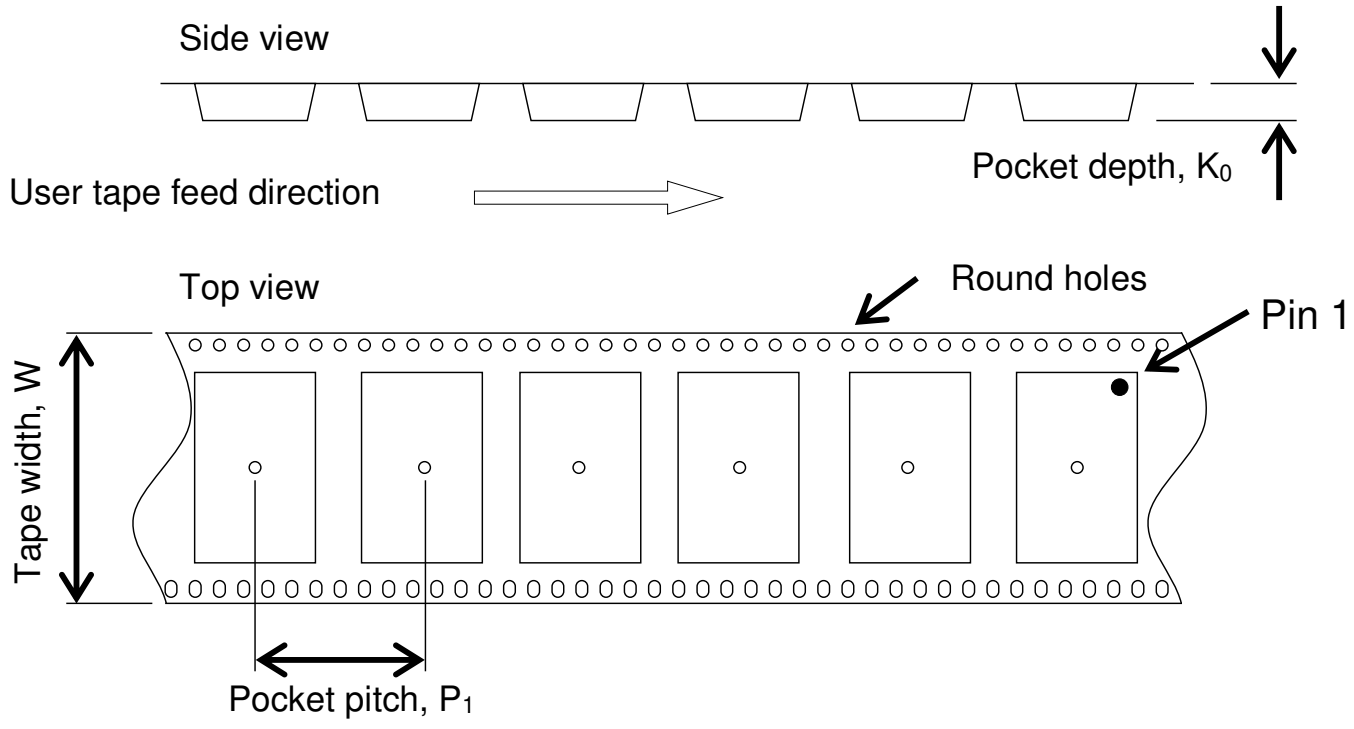

© Flex

Product Qualification Specification

Characteristics			
External visual inspection	IPC-A-610		
Change of temperature (Temperature cycling)	IEC 60068-2-14 Na	Temperature range Number of cycles Dwell/transfer time	-40 to 100°C 1000 15 min/0-1 min
Cold (in operation)	IEC 60068-2-1 Ad	Temperature T_A Duration	-45°C 72 h
Damp heat	IEC 60068-2-67 Cy	Temperature Humidity Duration	85°C 85 % RH 1000 hours
Dry heat	IEC 60068-2-2 Bd	Temperature Duration	125°C 1000 h
Electrostatic discharge susceptibility	IEC 61340-3-1, JESD 22-A114 IEC 61340-3-2, JESD 22-A115	Human body model (HBM) Machine Model (MM)	Class 2, 2000 V Class 3, 200 V
Immersion in cleaning solvents	IEC 60068-2-45 XA, method 2	Water Glycol ether Isopropyl alcohol	55°C 35°C 35°C
Mechanical shock	IEC 60068-2-27 Ea	Peak acceleration Duration	100 g 6 ms
Moisture reflow sensitivity [1]	J-STD-020C	Level 1 (SnPb-eutectic) Level 3 (Pb Free)	225°C 260°C
Operational life test	MIL-STD-202G, method 108A	Duration	1000 h
Resistance to soldering heat [2]	IEC 60068-2-20 Tb, method 1A	Solder temperature Duration	270°C 10-13 s
Robustness of terminations	IEC 60068-2-21 Test Ua1 IEC 60068-2-21 Test Ue1	Through hole mount products Surface mount products	All leads All leads
Solderability	IEC 60068-2-58 test Td [1] IEC 60068-2-20 test Ta [2]	Preconditioning Temperature, SnPb Eutectic Temperature, Pb-free Preconditioning Temperature, SnPb Eutectic Temperature, Pb-free	150°C dry bake 16 h 215°C 235°C Steam ageing 235°C 245°C
Vibration, broad band random	IEC 60068-2-64 Fh, method 1	Frequency Spectral density Duration	10 to 500 Hz 0.07 g^2/Hz 10 min in each direction

Notes
[1] Only for products intended for reflow soldering (surface mount products)
[2] Only for products intended for wave soldering (plated through hole products)