Pomona®

Model 5286
Connector BNC (M), Crimp, RG 59

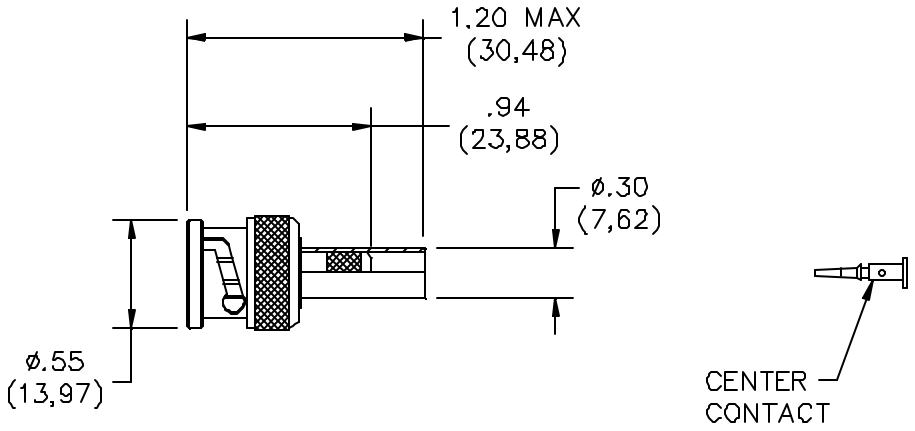

FEATURES:

- Connector accepts types RG/U: 59, 59A, 59B, 62, 62A, 62B, 62C, and 210.
- Connector meets interface requirements of MIL-STD-348.

MATERIALS:

Body: Brass, Tarnish Resistant Plating
Center Contact: Male: Gold Plated Brass
Female: Gold Plated Beryllium Copper
Gasket – Silicone Rubber
Dielectric: PTFE
Marking: "POMONA 5286"

RATINGS:

Operating Voltage: 500 VRMS Max.
Nominal Impedance: 75 Ohms

ORDERING INFORMATION: Model 5286

All dimensions are in inches and metric. All specifications are to the latest revisions. Specifications are subject to change without notice.
Registered trademarks are the property of their respective companies. Made in USA

Sales: 800-490-2361 Fax: 888-403-3360
Technical Assistance: 800-241-2060