THIS DRAWING IS UNPUBLISHED. RELEASED FOR PUBLICATION 20
© COPYRIGHT 20 BY TYCO ELECTRONICS CORPORATION. ALL RIGHTS RESERVED.

LOC	DIST
A	66

REVISIONS

P	LTR	DESCRIPTION	DATE	DWN	APVD
	A	RELEASED	15MAR2012	KH	SX
	B	ECR-14-008807	12JUN2014	KH	TE
	C	ECR-19-002145	10FEB2019	TB	CT
	D	ECR-20-014320	09OCT2020	FZ	TE

PART NUMBER	REVISION	DESCRIPTION	FEED TYPE
2151210-1	C	FINE CRIMP HEIGHT ADJUST	MECHANICAL
2151210-2	D	FINE CRIMP HEIGHT ADJUST	PNEUMATIC
7-2151210-1	C	MECHANICAL AND CRIMP TOOLING KIT	MECHANICAL
7-2151210-2	D	PNEUMATIC AND CRIMP TOOLING KIT	PNEUMATIC
7-2151210-7	A	CRIMP TOOLING KIT	-

ATLANTIC VERSION TERMINATOR INTERFACE ADAPTER

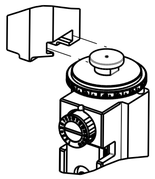

APPLICATOR DATA		
CRIMP	SIZE	TYPE
WIRE	.090 [2.29 mm]	F
INSUL	.130 [3.30 mm]	F
APPLICATOR INSTRUCTIONS 408-35042		

TERMINAL DATA: TE TERMINAL		TE CRIMP SPECIFICATION
TERMINAL NAME: PIN & SOCKET MATE-N-LOK		
WIRE STRIP LENGTH .154-.185 IN [3.90-4.70 mm]	INSULATION DIAMETER RANGE ∅.070-.130 IN [1.78-3.30 mm]	
TERMINAL APPLICATION SPECIFICATION 114-3118	-	-
-	-	-

TERMINALS APPLIED

TE TERMINAL	TE TERMINAL	TE TERMINAL	TE TERMINAL
163300-5	163300-6	163300-7	163300-8
163301-6	163301-8		

WIRE SIZE	CRIMP HEIGHT mm [INCH]	CRIMP HEIGHT REFERENCE SETTING 4
1.00mm2	1.30+/-0.05 [.051+/-.002]	5.3
0.75mm2	1.24+/-0.05 [.049+/-.002]	5.9
0.50mm2	1.19+/-0.03 [.047+/-.001]	6.5

1. RECOMMENDED SPARE PARTS
2. REFER TO SUPPLIED INSTRUCTION SHEET FOR CLEANING, LUBRICATION AND STORAGE OF APPLICATOR.
3. APPLY PART NUMBER 2-23419-6 LOCTITE TO THREADS OF ITEM 242. APPLY PART NUMBER 1-23419-5 LOCTITE TO THREADS OF ITEM 50.
4. CRIMP HEIGHT REFERENCE SETTING WAS THE SETTING USED WHEN THE APPLICATOR WAS QUALIFIED AT THE FACTORY. ADJUSTMENT MAY BE NECESSARY WHEN RUNNING APPLICATOR IN THE FIELD.
5. UNLESS SPECIFIED OTHERWISE TORQUE VALUES SHALL BE USED PER DOCUMENT, 101-35000.

*WARNING
ON INSTALLATION, SET WIRE DISC TO CRIMP HEIGHT REFERENCE SETTING FOR LARGEST WIRE SIZE. CRIMP HEIGHT REFERENCE SETTINGS GREATER THAN THE VALUE SHOWN MAY CAUSE DAMAGE TO THE CRIMP TOOLING. REFER TO THE INSTRUCTION SHEET FOR PROPER SETUP AND ADJUSTMENTS.

-77	-72	-71	-2	-1	PART NO	DESCRIPTION	ITEM NO
-	1	-	1	-	2119641-1	FEED CAM, AIR FEED	248
-	1	1	1	1	2119082-9	CAM, SNAIL, INSULATION ADJUSTMENT	244
-	1	1	1	1	2079764-1	WASHER, WAVE SPRING, CREST-TO-CREST	243
3 -	1	1	1	1	2119083-1	RETAINER, INSULATION DIAL	242
-	1	1	1	1	7-18023-7	SCR, SKT HD CAP M3 X 4.0	241
-	-	1	-	1	2119580-1	MECHANICAL FEED ASSEMBLY	239
-	1	-	1	-	2844940-1	AIR FEED MODULE	238
-	2	2	2	2	1-2079383-0	SCR, BHSC, RoHS (M3 X 6)	230
-	1	1	1	1	1976053-7	LOCATER BLOCK,TERMINAL	179
-	1	1	1	1	6-993111-6	PIN, SLOTTED SPRING 3.0 X 14.0	177
-	1	1	1	1	8-22280-7	SPRING, COMPRESSION	176
-	1	1	1	1	1752353-2	GUIDE PIN,HOLDDOWN	175
-	1	1	1	1	1901680-2	GUIDE PIN,HOLDDOWN	174
-	REF	REF	REF	REF	994970-2	COUNTER, MAGNETIC	164
-	1	1	1	1	2844908-1	SCREW, LOCKING	99
-	1	1	1	1	2844907-1	POST, LOCKING	98
-	1	1	1	1	455888-5	SPACER, CRIMPER	82
-	1	1	1	1	1803607-3	DOCUMENTATION PACKAGE	71
-	1	1	1	1	2119740-1	TAG,IDENTIFICATION	67
-	2	2	2	2	2168078-1	SCREW, DRIVE, RH, RoHS, 2 x .188	66
-	1	1	1	1	2168083-2	SCR, SKT HD CAP, RoHS, M4 X 8.0	60
-	1	1	1	1	5-18022-5	SCR, HEX HD CAP, M4 X 6.0	59
-	1	1	1	1	1338685-1	PAWL, FEED	56
-	4	4	4	4	2168083-3	SCR, SKT HD CAP, RoHS, M4 X 12.0	54
-	1	1	1	1	1-5018030-0	NUT, HEX, REG, RoHS, M3.5	52
-	1	1	1	1	1901681-8	HOLDDOWN, TERMINAL	51
3 -	1	1	1	1	1-1752354-2	STANDOFF,HOLD-DOWN	50
-	1	2	1	2	18023-9	SCR, SKT HD CAP M4 X 6.0	49
-	-	1	-	1	2119652-1	FEED CAM, PRE FEED	48
-	-	1	-	1	2119653-1	FEED CAM, POST FEED	47
-	1	1	1	1	1803583-9	APPLICATOR BASIC ASSEMBLY, SF	46
-	1	1	1	1	1803515-3	RAM ASSEMBLY, SF ATLANTIC	44
-	1	1	1	1	1803602-1	SCR, BHSC, RoHS (M8 X 25)	41
-	1	1	1	1	1752356-3	SUPPORT, TERMINAL	34
-	2	2	2	2	2079383-5	SCR, BHSC, RoHS (M4 X 20)	33
-	2	2	2	2	2-2844962-8	SPACER, CYLINDRICAL, STRIP GUIDE	30
-	1	1	1	1	2844992-1	ASSEMBLY, STRIP GUIDE	29
-	1	1	1	1	1-455888-7	SPACER, CRIMPER	28
-	1	1	1	1	1320928-2	STRIP GUIDE	24
-	1	1	1	1	2168083-2	SCR, SKT HD CAP, RoHS, M4 X 8.0	21
-	2	2	2	2	1-18028-2	WASHER, FLAT, REG M4	20
-	1	1	1	1	2119533-1	STRIPPER, SIDE FEED	19
1 -	1	1	1	1	2119806-1	INSERT, SHEAR	13
-	1	1	1	1	3-22280-3	SPRING, COMPRESSION	12
-	1	1	1	1	1-356885-4	STOP, SHEAR	11
1 -	1	1	1	1	2119805-1	SHEAR HOLDER, FRONT	10
1 -	1	1	1	1	1803095-6	FLOATING SHEAR, FRONT -	9
1 1	2	2	1	1	1-1333205-5	ANVIL, COMBINATION	8
-	-	-	-	-	-	-	7
-	-	-	-	-	-	-	6
-	1	1	1	1	2119757-8	DEPRESSOR, SHEAR	5
-	1	1	1	1	1-238011-7	BLOCK, CRIMPER SPACER	4
1 1	2	2	1	1	1-1633961-5	CRIMPER, INSULATION F PREMIUM	3
-	1	1	1	1	455888-2	SPACER, CRIMPER	2
1 1	2	2	1	1	3-456406-0	CRIMPER, WIRE PREMIUM	1

ATLANTIC VERSION
Shown on sheets 1 of 4 & 2 of 4
(Pacific version shown on sheets 3 of 4 & 4 of 4)

THIS DRAWING IS A CONTROLLED DOCUMENT FOR TYCO ELECTRONICS CORPORATION. IT IS SUBJECT TO CHANGE AND ITS CONTROLLING ENGINEERING ORGANIZATION SHOULD BE CONTACTED FOR THE LATEST REVISION.

DWN K HUANG	28OCT2011	TE Connectivity Harrisburg, PA 17105-3608
CHK S XI	28OCT2011	
APVD I CRUZ	28OCT2011	NAME Ocean Side Feed Applicator -
PRODUCT SPEC -		
APPLICATION SPEC -		SIZE A1 · CAGE CODE 00779 · DRAWING NO C-2151210 · RESTRICTED TO -
WEIGHT -		
Customer Accessible Production Drawing	SCALE 1:2	SHEET 1 OF 4 · REV D

DIMENSIONS: mm

TOLERANCES UNLESS OTHERWISE SPECIFIED:
0 PLC ±-
1 PLC ±-
2 PLC ±-
3 PLC ±-
4 PLC ±-
ANGLES ±-

MATERIAL - -
FINISH - -

SHEETS 3 & 4 ARE NOT REQUIRED FOR ATLANTIC VERSION

THIS DRAWING IS UNPUBLISHED. RELEASED FOR PUBLICATION 20
© COPYRIGHT 20 BY TYCO ELECTRONICS CORPORATION. ALL RIGHTS RESERVED.

LOC	DIST
A	66

REVISIONS

P	LTR	DESCRIPTION	DATE	DWN	APVD
	-	SEE SHEET 1	-	-	-

FEED TYPE MECHANICAL

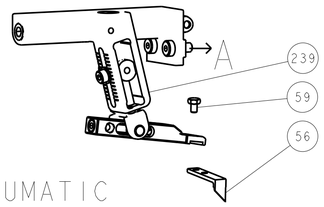

PNEUMATIC

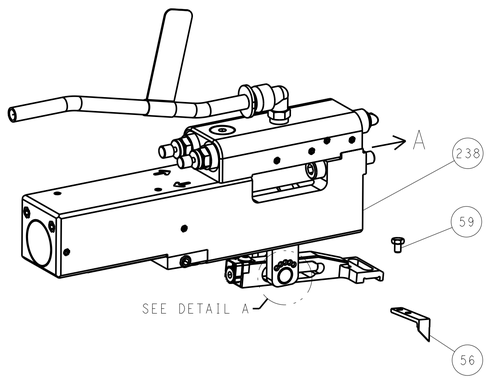

FEED SPRING SETTING POSITION
(SHOWN FROM REAR SIDE)

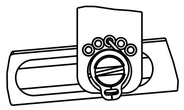

DETAIL A

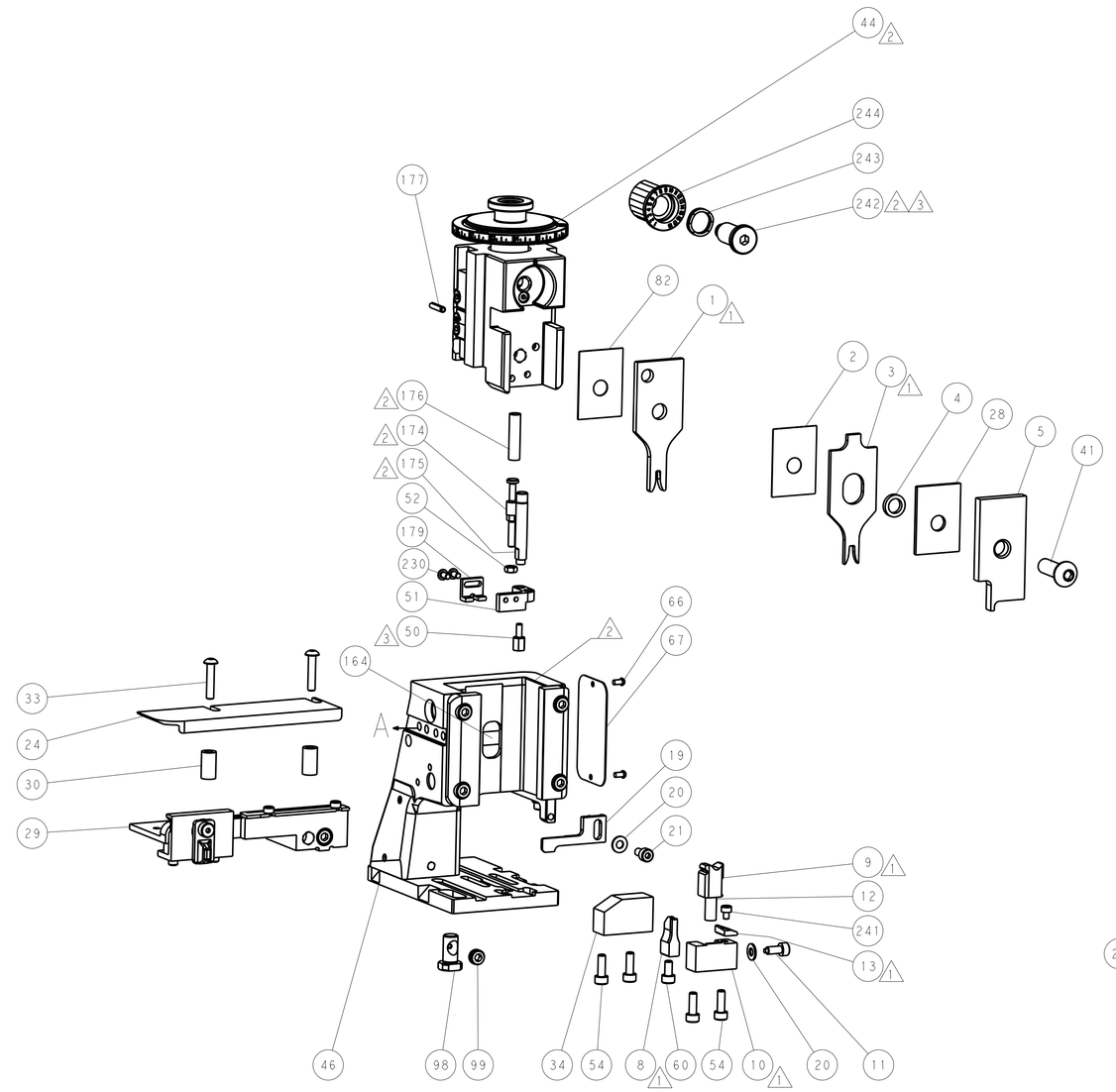

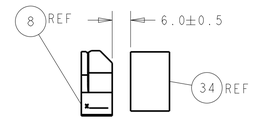

TERMINAL SUPPORT LOCATION

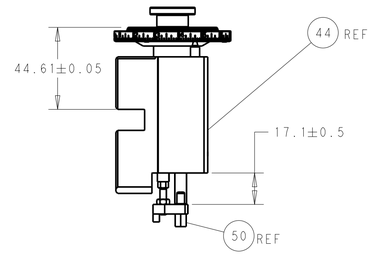

RAM AND HOLDDOWN SET-UP

ITEM 30 LOCATED AT
FRONT HOLES

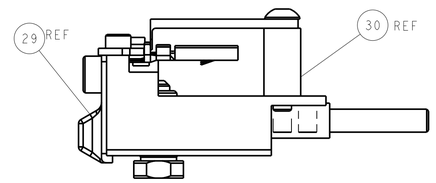

FEED TRACK POSITION
GUIDE BY INSULATION BARREL

CAM POSITIONS

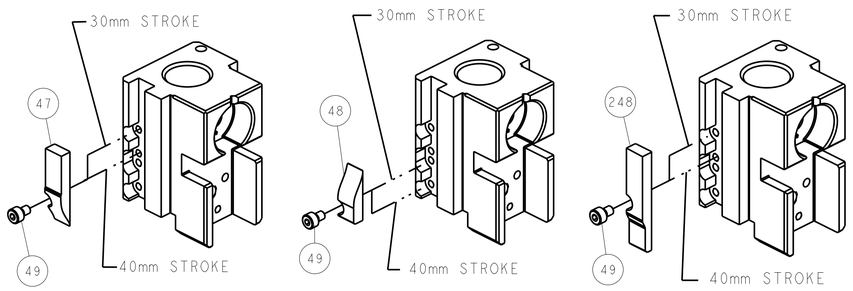

MECHANICAL
POST FEED

MECHANICAL
PRE FEED

AIR FEED

ATLANTIC VERSION

Shown on sheets 1 of 4 & 2 of 4
(Pacific version shown on sheets 3 of 4 & 4 of 4)

THIS DRAWING IS A CONTROLLED DOCUMENT FOR TYCO ELECTRONICS CORPORATION. IT IS SUBJECT TO CHANGE AND THE CONTROLLING ENGINEERING ORGANIZATION SHOULD BE CONTACTED FOR THE LATEST REVISION.

DIMENSIONS: mm

TOLERANCES UNLESS OTHERWISE SPECIFIED:
0 PLC ±
1 PLC ±
2 PLC ±
3 PLC ±
4 PLC ±
ANGLES ±

MATERIAL -
FINISH -

DWN	K.HUANG	28OCT2011
CHK	S.XI	28OCT2011
APVD	L.CRUZ	28OCT2011

PRODUCT SPEC -
APPLICATION SPEC -
WEIGHT -

TE Connectivity
Harrisburg, PA 17105-3608

NAME: Ocean Side Feed Applicator -

SIZE	CAGE CODE	DRAWING NO	RESTRICTED TO
A1	00779	C-2151210	-

Customer Accessible Production Drawing
SCALE 1:2 SHEET 2 OF 4 REV D

AMP 4805 REV 31MAR2000

SHEETS 3 & 4 ARE NOT REQUIRED FOR ATLANTIC VERSION

THIS DRAWING IS UNPUBLISHED. RELEASED FOR PUBLICATION 20
© COPYRIGHT 20 BY TYCO ELECTRONICS CORPORATION. ALL RIGHTS RESERVED.

LOC	DIST
A	66

REVISIONS

P	LTR	DESCRIPTION	DATE	DWN	APVD
	-	SEE SHEET 1	-	-	-

PART NUMBER	REVISION	DESCRIPTION	FEED TYPE
2-2151210-1	C	FINE CRIMP HEIGHT ADJUST	MECHANICAL
2-2151210-2	D	FINE CRIMP HEIGHT ADJUST	PNEUMATIC
7-2151210-7	A	CRIMP TOOLING KIT	-

PACIFIC VERSION TERMINATOR INTERFACE ADAPTER

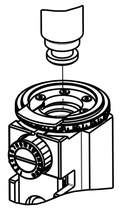

APPLICATOR DATA		
CRIMP	SIZE	TYPE
WIRE	.090 [2.29 mm]	F
INSUL	.130 [3.30 mm]	F
APPLICATOR INSTRUCTIONS 408-35042		

TERMINAL DATA: TE TERMINAL		TE CRIMP SPECIFICATION	
TERMINAL NAME: PIN & SOCKET MATE-N-LOK			
WIRE STRIP LENGTH .154-.185 IN [3.90-4.70 mm]		INSULATION DIAMETER RANGE ∅.070-.130 IN [1.78-3.30 mm]	
TERMINAL APPLICATION SPECIFICATION	114-3118	-	-
	-	-	-

TERMINALS APPLIED

TE TERMINAL	TE TERMINAL	TE TERMINAL	TE TERMINAL
163300-5	163300-6	163300-7	163300-8
163301-6	163301-8		

WIRE SIZE	CRIMP HEIGHT mm [INCH]	CRIMP HEIGHT REFERENCE SETTING (4)
1.00mm2	1.30+/-0.05 [.051+/-.002]	5.3
0.75mm2	1.24+/-0.05 [.049+/-.002]	5.9
0.50mm2	1.19+/-0.03 [.047+/-.001]	6.5

(1) RECOMMENDED SPARE PARTS

(2) REFER TO SUPPLIED INSTRUCTION SHEET FOR CLEANING, LUBRICATION AND STORAGE OF APPLICATOR.

(3) APPLY PART NUMBER 2-23419-6 LOCTITE TO THREADS OF ITEM 242. APPLY PART NUMBER 1-23419-5 LOCTITE TO THREADS OF ITEM 50.

(4) CRIMP HEIGHT REFERENCE SETTING WAS THE SETTING USED WHEN THE APPLICATOR WAS QUALIFIED AT THE FACTORY. ADJUSTMENT MAY BE NECESSARY WHEN RUNNING APPLICATOR IN THE FIELD.

5. UNLESS SPECIFIED OTHERWISE TORQUE VALUES SHALL BE USED PER DOCUMENT, 101-35000.

*WARNING
ON INSTALLATION, SET WIRE DISC TO CRIMP HEIGHT REFERENCE SETTING FOR LARGEST WIRE SIZE. CRIMP HEIGHT REFERENCE SETTINGS GREATER THAN THE VALUE SHOWN MAY CAUSE DAMAGE TO THE CRIMP TOOLING. REFER TO THE INSTRUCTION SHEET FOR PROPER SETUP AND ADJUSTMENTS.

	-77	-22	-21	PART NO	DESCRIPTION	ITEM NO
	-	1	1	2119082-9	CAM, SNAIL, INSULATION ADJUSTMENT	244
	-	1	1	2079764-1	WASHER, WAVE SPRING, CREST-TO-CREST	243
(3)	-	1	1	2119083-1	RETAINER, INSULATION DIAL	242
	-	1	1	7-18023-7	SCR, SKT HD CAP M3 X 4.0	241
	-	-	1	2119580-1	MECHANICAL FEED ASSEMBLY	239
	-	1	-	2844940-1	AIR FEED MODULE	238
	-	2	2	1-2079383-0	SCR, BHSC, RoHS (M3 X 6)	230
	-	1	1	1976053-7	LOCATER BLOCK,TERMINAL	179
	-	1	1	6-993111-6	PIN, SLOTTED SPRING 3.0 X 14.0	177
	-	1	1	8-22280-7	SPRING, COMPRESSION	176
	-	1	1	1752353-2	GUIDE PIN,HOLDDOWN	175
	-	1	1	1901680-2	GUIDE PIN,HOLDDOWN	174
	-	REF	REF	994970-2	COUNTER, MAGNETIC	164
	-	1	-	2119641-2	FEED CAM, AIR FEED	151
	-	1	1	2168083-8	SCR, SKT HD CAP, RoHS, M4 X 16	144
	-	4	4	2168083-9	SCR, SKT HD CAP, RoHS, M4 X 20	143
	-	-	1	2119653-2	FEED CAM, POST FEED	142
	-	1	1	1-1803583-0	APPLICATOR BASIC ASSEMBLY, SF	141
	-	1	1	1803516-3	RAM ASSEMBLY, SF PACIFIC	140
	-	1	1	2844908-1	SCREW, LOCKING	99
	-	1	1	2844907-1	POST, LOCKING	98
	-	1	1	455888-5	SPACER, CRIMPER	82
	-	1	1	1803607-3	DOCUMENTATION PACKAGE	71
	-	1	1	2119740-1	TAG,IDENTIFICATION	67
	-	2	2	2168078-1	SCREW, DRIVE, RH, RoHS, 2 x .188	66
	-	1	1	5-18022-5	SCR, HEX HD CAP, M4 X 6.0	59
	-	1	1	1338685-1	PAWL, FEED	56
	-	1	1	1-5018030-0	NUT, HEX, REG, RoHS, M3.5	52
	-	1	1	1901681-8	HOLDDOWN, TERMINAL	51
(3)	-	1	1	1-1752354-2	STANDOFF,HOLD-DOWN	50
	-	1	2	18023-9	SCR, SKT HD CAP M4 X 6.0	49
	-	-	1	2119652-1	FEED CAM, PRE FEED	48
	-	1	1	1803602-1	SCR, BHSC, RoHS (M8 X 25)	41
	-	1	1	1752356-3	SUPPORT, TERMINAL	34
	-	2	2	2079383-5	SCR, BHSC, RoHS (M4 X 20)	33
	-	2	2	2-2844962-8	SPACER, CYLINDRICAL, STRIP GUIDE	30
	-	1	1	2844992-1	ASSEMBLY, STRIP GUIDE	29
	-	1	1	1-455888-7	SPACER, CRIMPER	28
	-	1	1	1320928-2	STRIP GUIDE	24
	-	1	1	2168083-2	SCR, SKT HD CAP, RoHS, M4 X 8.0	21
	-	2	2	1-18028-2	WASHER, FLAT, REG M4	20
	-	1	1	2119533-1	STRIPPER, SIDE FEED	19
(1)	-	1	1	2119806-1	INSERT, SHEAR	13
	-	1	1	3-22280-3	SPRING, COMPRESSION	12
	-	1	1	1-356885-4	STOP, SHEAR	11
(1)	-	1	1	2119805-1	SHEAR HOLDER, FRONT	10
(1)	-	1	1	1803095-6	FLOATING SHEAR, FRONT -	9
(1)	1	1	1	1-1333205-5	ANVIL, COMBINATION	8
	-	-	-	-	-	7
	-	-	-	-	-	6
	-	1	1	2119757-8	DEPRESSOR, SHEAR	5
	-	1	1	1-238011-7	BLOCK, CRIMPER SPACER	4
(1)	1	1	1	1-1633961-5	CRIMPER, INSULATION F PREMIUM	3
	-	1	1	455888-2	SPACER, CRIMPER	2
(1)	1	1	1	3-456406-0	CRIMPER, WIRE PREMIUM	1

PACIFIC VERSION
Shown on sheets 3 of 4 & 4 of 4
(Atlantic version shown on sheets 1 of 4 & 2 of 4)

THIS DRAWING IS A CONTROLLED DOCUMENT FOR TYCO ELECTRONICS CORPORATION. IT IS SUBJECT TO CHANGE WITHOUT NOTICE. ALL PARTIES TO THIS ORGANIZATION SHOULD BE CONTACTED FOR THE LATEST REVISION.

DWN	K.HUANG	28OCT2011
CHK	S.XI	28OCT2011
APVD	I.CRUZ	28OCT2011

DIMENSIONS: mm
TOLERANCES UNLESS OTHERWISE SPECIFIED: 0 PLC ±- 1 PLC ±- 2 PLC ±- 3 PLC ±- 4 PLC ±- ANGLES ±-
MATERIAL - -
FINISH - -
PRODUCT SPEC -
APPLICATION SPEC -
WEIGHT -

TE Connectivity
Harrisburg, PA 17105-3608

NAME: Ocean Side Feed Applicator -

SIZE	CAGE CODE	DRAWING NO	RESTRICTED TO
A1	00779	C-2151210	-

Customer Accessible Production Drawing | SCALE 1:2 | SHEET 3 OF 4 | REV D

SHEETS 1 & 2 ARE NOT REQUIRED FOR PACIFIC VERSION

THIS DRAWING IS UNPUBLISHED. RELEASED FOR PUBLICATION 20
© COPYRIGHT 20 BY TYCO ELECTRONICS CORPORATION. ALL RIGHTS RESERVED.

LOC	DIST
A	66

REVISIONS

P	LTR	DESCRIPTION	DATE	DWN	APVD
	-	SEE SHEET 1	-	-	-

FEED TYPE

MECHANICAL

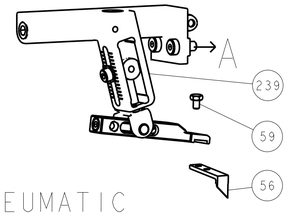

PNEUMATIC

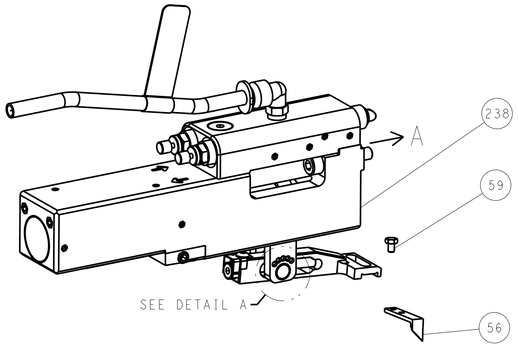

FEED SPRING SETTING POSITION
(SHOWN FROM REAR SIDE)

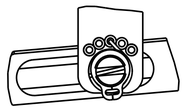

DETAIL A

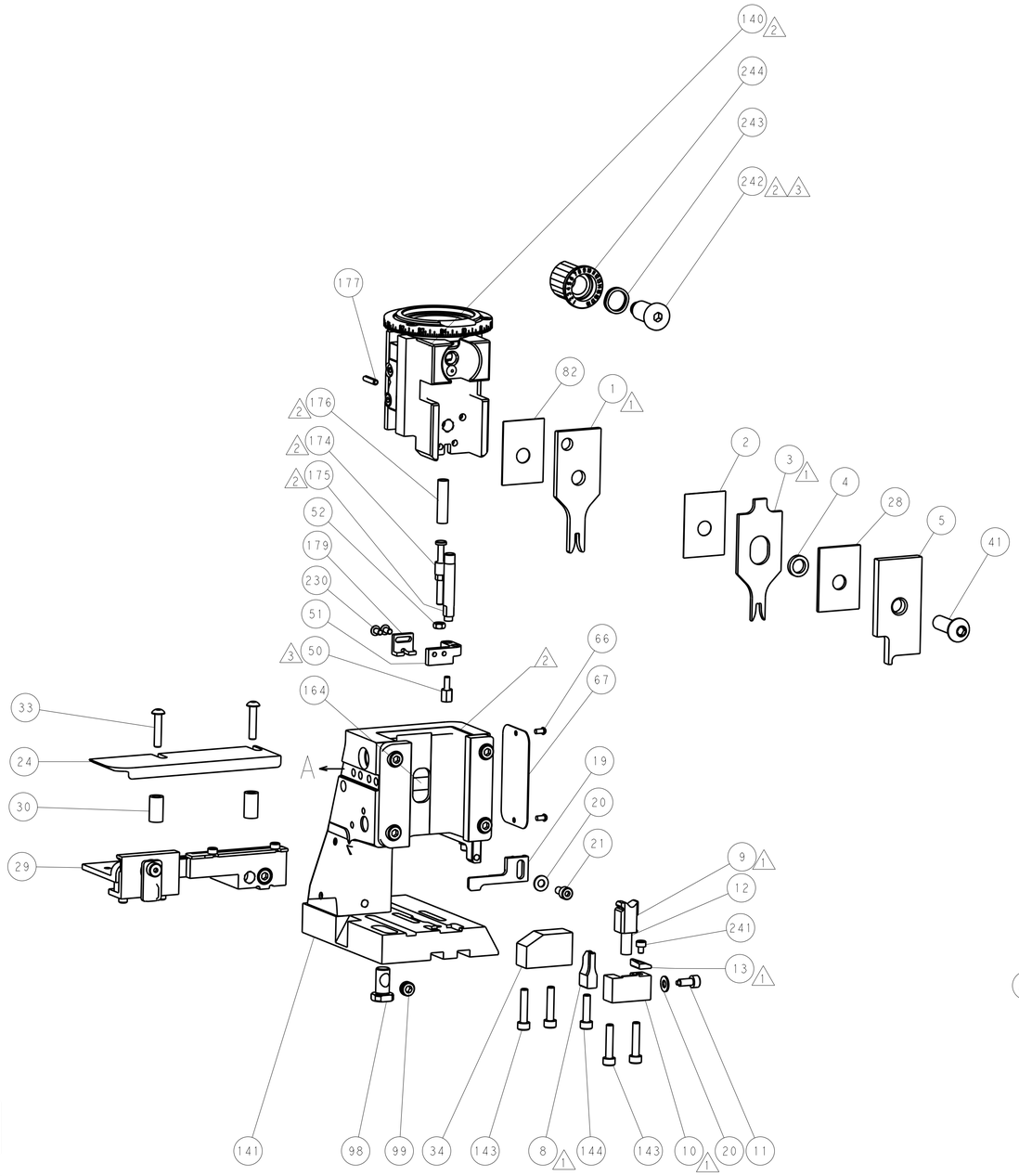

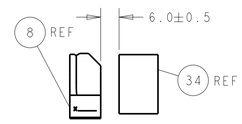

TERMINAL SUPPORT LOCATION

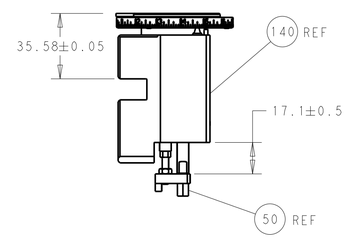

RAM AND HOLDDOWN SET-UP

ITEM 30 LOCATED AT
FRONT HOLES

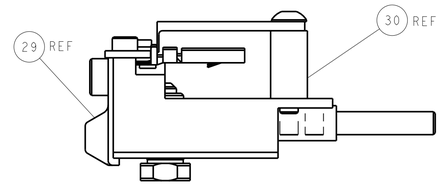

FEED TRACK POSITION
GUIDE BY INSULATION BARREL

CAM POSITIONS

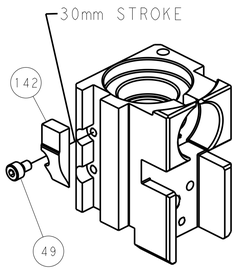

MECHANICAL
POST FEED

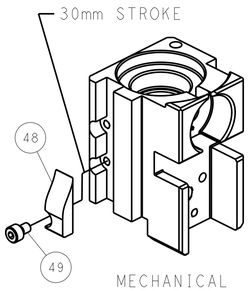

MECHANICAL
PRE FEED

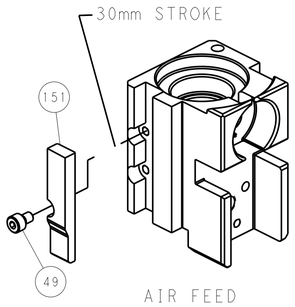

AIR FEED

PACIFIC VERSION
Shown on sheets 3 of 4 & 4 of 4
(Atlantic version shown on sheets 1 of 4 & 2 of 4)

THIS DRAWING IS A CONTROLLED DOCUMENT FOR TYCO ELECTRONICS CORPORATION. IT IS SUBJECT TO CHANGE AND THE CONTROLLING ENGINEERING ORGANIZATION SHOULD BE CONTACTED FOR THE LATEST REVISION.	DWN K.HUANG 28OCT2011	TE Connectivity Harrisburg, PA 17105-3608	
DIMENSIONS: mm	CHK S.XI 28OCT2011		
TOLERANCES UNLESS OTHERWISE SPECIFIED: 0 PLC ±· 1 PLC ±· 2 PLC ±· 3 PLC ±· 4 PLC ±· ANGLES ±·	APVD I.CRUZ 28OCT2011	NAME Ocean Side Feed Applicator -	
	PRODUCT SPEC -		
	APPLICATION SPEC -	SIZE A1 / CAGE CODE 00779 / DRAWING NO C-2151210	RESTRICTED TO -
MATERIAL - - / FINISH - -	WEIGHT -		
	Customer Accessible Production Drawing	SCALE 1:2 / SHEET 4 OF 4	REV D

SHEETS 1 & 2 ARE NOT REQUIRED FOR PACIFIC VERSION