Faraday Isolators, Pockels Cells & Modulators

QIOPTIQ
Photonics for Innovation
An Excelitas Technologies Company

About Excelitas Technologies

Excelitas Technologies® Corp. is a leading industrial technology manufacturer focused on delivering innovative, market-driven photonic solutions to meet the illumination, optical, optronic, sensing, detection and imaging needs of our OEM and end-user customers.

Serving a vast array of applications across biomedical, scientific, semiconductor, industrial manufacturing, safety, security, consumer products, defense and aerospace sectors, Excelitas stands committed to enabling our customers' success in their many various end-markets. Our team consists of more than 7,500 professionals working across North America, Europe and Asia, to serve customers worldwide.

Connect with Excelitas on Facebook, LinkedIn, Twitter and Instagram, or visit http://www.excelitas.com for more information.

Excelitas® , Excelitas Technologies® and LINOS® are registered trademarks of Excelitas Technologies Corp. All other products and services are either trademarks or registered trademarks of their respective owners.

1877 — Rodenstock founded

1898 — Spindler & Hoyer founded

1969 — Gsänger Optoelektronik founded

1991 — Point Source founded

1996 — Linos is founded merging together Spindler & Hoyer, Steeg & Reuter, Franke Optik and Gsänger Optoelektronik. LINOS acquires Rodenstock Präzisionsoptik in 2000

2005 — Qioptiq founded as a spin off from Thales High Tech Optics Group

2009 — Qioptiq acquires Linos and Point Source establishing a new and consolidated brand

EXCELITAS TECHNOLOGIES®

BIOMEDICAL

CONSUMER PRODUCTS

SEMICONDUCTOR

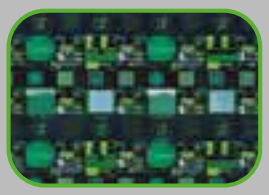

INDUSTRIAL

DEFENSE & AEROSPACE

SCIENTIFIC & ANALYTICAL

Content

Company Profile	02 - 03
Faraday Isolators	
Introduction	05 - 07
Product Overview	08
Single Stage Faraday Isolators	09 - 16
Tunable Isolators	17 - 19
Two Stage Faraday Isolators	20 - 23
Pockels Cells	
Introduction	24 - 28
Product Overview	29
Pockels Cells	30 - 36
Pockels Cells Positioner	37
Laser Modulators	
Introduction	38 - 39
Laser Modulators	40 - 45
Laser Modulator Amplifiers	46
Excelitas` Custom Solutions	47

2010 — 2013 — 2018 — 2019 — 2021

EXCELITAS TECHNOLOGIES®

Excelitas Technologies Corp. is founded, spinning-off of PerkinElmer Analytical Instrumentation Division which sprung from EG&G founded in 1947

QIOPTIQ Photonics for Innovation

LUMEN DYNAMICS PUTTING YOU IN CONTROL

Excelitas acquires Qioptiq and Lumen Dynamics

REO precision optical solutions

Excelitas acquires Research Electro Optics (REO)

AXSUN TECHNOLOGIES

Excelitas acquires Axsun Technologies

pco.

Excelitas acquires PCO AG

Welcome to the Excelitas Homepage

Our capabilities ...

.. regarding the famous LINOS magneto- and electro optics as well as detailed information about our expertise in products for illumination, transmission and detection you find here:

Please scan or click the QR-Code!

Faraday Isolators

We offer LINOS Faraday isolators for all wavelengths in the range 400 to 1310 nm, as well as 1550 nm. Isolators for other wavelengths can be implemented on request. Many isolators can be adjusted over a wide spectral range; tunable models can even be set for an interval of several hundred nanometers. At the same time, LINOS Faraday isolators are distinguished by high performance combined with the greatest possible transmission. With more than 60 dB, our two-stage isolators offer the best isolation available on the market.

The consistently high quality is assured by a combination of our many years of experience, intelligent design, modern engineering with computer simulations, sophisticated processing, and our ISO 9001 / ISO 13485 certified quality management system. The result is incomparable value that distinguishes all our products – value you can count on!

Qioptiq quality criteria:

- Isolation > 30 dB (single-stage) or > 60 dB (two-stage)
- Transmission > 90% (single-stage) or > 80% (two-stage)
- All models can be used in wide wavelength ranges
- Excellent reliability

Special features:

Our isolators are available in many different versions for a large range of wavelengths. Rotators are available on request.

Main application:

Protecting lasers from damage or power instability due to back reflection into the laser cavity; de-coupling oscillators and amplification systems; injection locking, and more.

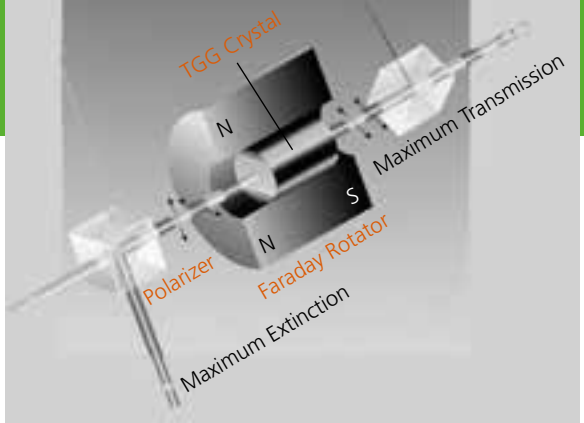

Characteristics

Principle of Operation

Faraday isolators are optical components which allow light travel in only one direction. Their mode of operation is based on the Faraday effect (linear magneto-optical effect). In principle, the function of an optical isolator is analogue to that of an electrical diode.

Faraday isolators are composed of three elements:

- Entrance Polarizer
- Faraday Rotator
- Exit Polarizer

Thin film polarizers are commonly used as entrance and exit polarizers, typically in form of a special polarizing beam splitter cube. These polarizers have an extremely high extinction ratio and are designed for use with high power lasers. The polarizer entrance and exit surfaces are coated with an antireflective coating for the specified wavelength range. The key element of the Faraday isolator is the Faraday rotator. The rotator consists of a strong permanent magnet containing a crystal with a high Verdet constant.

Light of any polarization entering the entrance polarizer exits it as horizontally or vertically linearly polarized light. Since laser light is usually linearly polarized, one can match the orientation of the entrance polarizer and the polarization of the laser by simply rotating the isolator. Light then passes through the Faraday rotator. For most wavelengths the crystal is a Terbium Gallium Garnet (TGG) crystal which is placed in a strong homogeneous magnetic field. Crystal length and magnetic field strength are adjusted so that the light polarization is rotated by 45° on exiting the crystal. In the figure above, the light is rotated counter clockwise when viewed in the north/south direction of the magnetic field (±45°) and the exit polarizer is also oriented at ±45°, so that the maximum beam intensity is transmitted.

If light of any polarization, but with a reversed direction of propagation, meets the exit polarizer, it leaves at ±45°, passes through the Faraday rotator and is again rotated by ±45°. The non-reciprocal nature of the Faraday effect results in the direction of rotation once again being counter clockwise as viewed in the north/south direction of the magnetic field. Upon leaving the Faraday rotator, the polarization has gone through two ±45° rotations resulting in a total rotation of ±90°. In this polarization direction the light is deflected laterally by the entrance polarizer.

Increased Isolation

The maximum isolation of the Faraday isolator is limited by inhomogenities of the TGG crystal and the magnetic field. However, it is possible to square the extinction ratio by placing two isolators in series and by arranging the polarity of the two magnets to be opposite to each other. This way the polarization direction of the transmitted light remains unchanged in the transmission direction and the effect of both magnetic fields is enhanced. This arrangement also leads to a more compact isolator. The strength of this effect depends on the distance between the two magnets and can be used to tune the isolator to different wavelengths. The adjustment is necessary because the rotational angle of the TGG crystal is wavelength and temperature dependent. Please see section "Two Stage Isolators" (page 20) for more information.

Advantages

High Isolation

The properties of the LINOS Faraday isolators are determined by the quality of the optical elements and the uniformity of the magnetic field. The entrance and exit polarizers exhibit a very high extinction ratio, so that the isolation is mainly limited by inhomogenities in the crystal material. Specially selected crystal materials with a high Verdet constant combined with permanent magnets with a high remanence enable Qioptiq to use shorter crystals and obtain an isolation > 30 dB.

The radiation blocked by the entrance and exit polarizers is not absorbed internally, but is deflected by 90° with respect to the beam direction. This ensures a stable thermal operation even at higher laser power levels. The blocked radiation can be used for other applications. All optical surfaces are slightly tilted relative to the beam axis.

Low Insertion Loss

The high transmission, typically > 90%, is achieved by using materials with low absorption and anti-reflective coatings with low residual reflectivity on all entrance and exit surfaces.

Large Aperture, Compact Design

All optical elements have been aligned to eliminate beam shading and allow for easy adjustment. Focusing is not necessary. The compact design is achieved by using rare earth magnets with the highest remanent magnetism and TGG crystal material with a high Verdet constant. The isolator is suitable for divergent beams or in setups with limited space. A minimal optical path length in the isolator results in the lowest possible influence on the image.

Three sides of the entrance and exit polarizers are usable and readily accessible for easy cleaning. The degree of isolation can be adjusted over a wide range.

Mounting Flexibility

The LINOS Faraday isolators can be mounted directly via threaded holes in the housing or via additional base plates or angle brackets. New rotatable Faraday isolators are available.

Applications

The ongoing development and refinement of laser technology have created a need for optical components that shield the laser resonator from back reflections. LINOS Faraday isolators provide an efficient method of suppressing instabilities and intensity fluctuations in laser devices.

Typical Applications are:

- Protection of the resonator in solid state and gas lasers from back reflections
- Prevention of parasitic oscillation in multistage solid state amplifiers
- Protection of diode lasers against back scatter and extraneous light

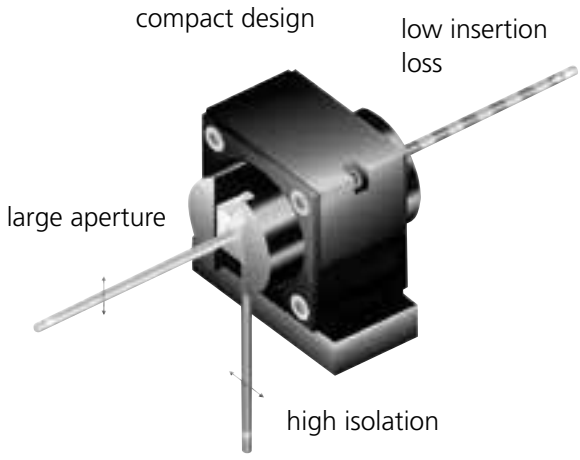

Product Overview

Single Stage

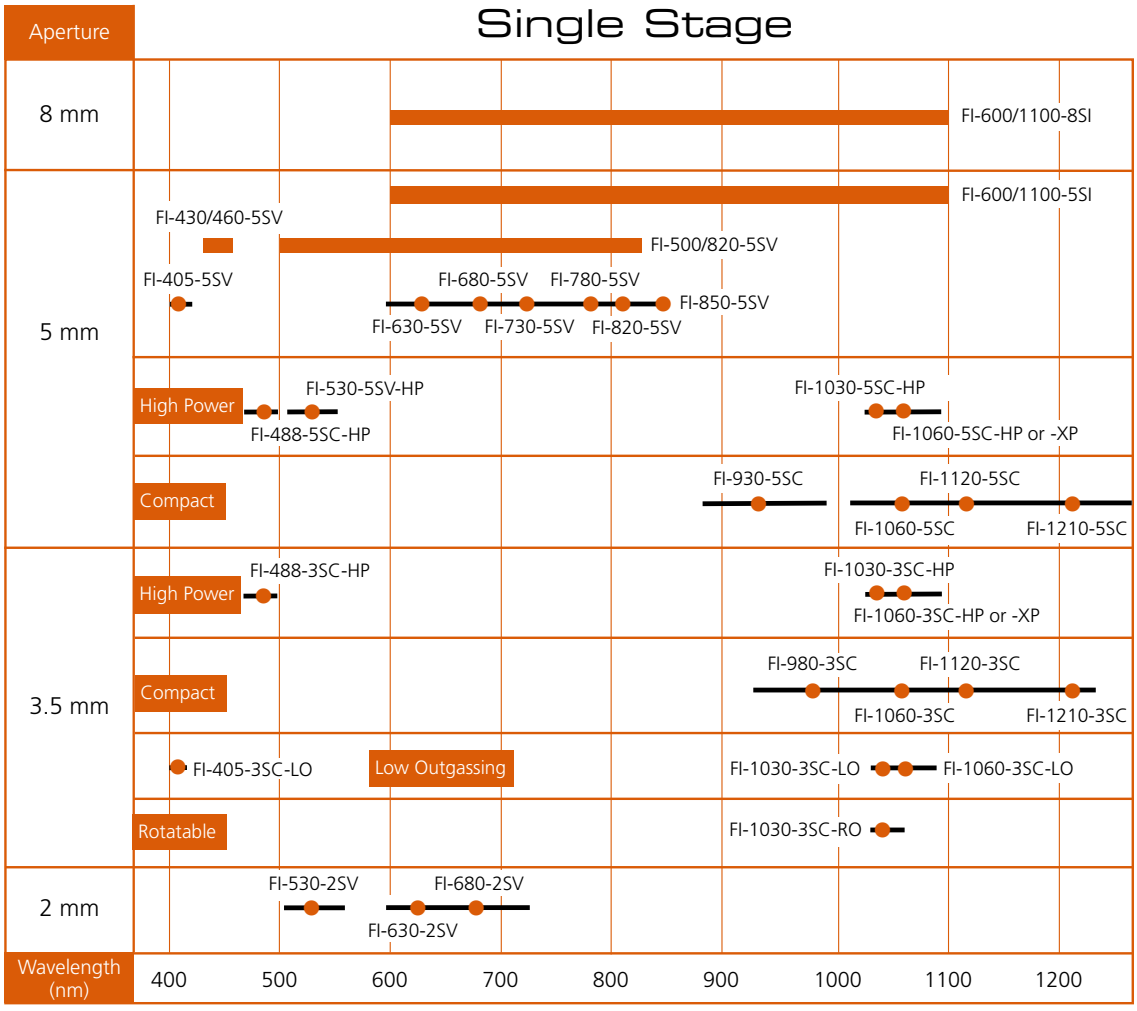

XP ≥ 50 W, RO = Rotatable

Two Stage

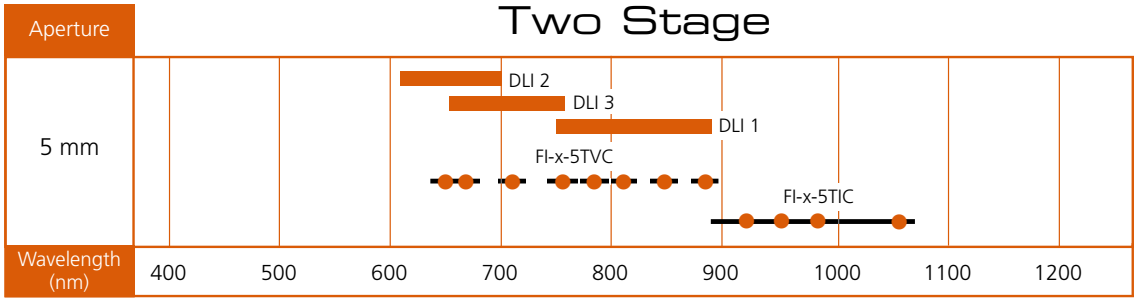

LPE-Technology

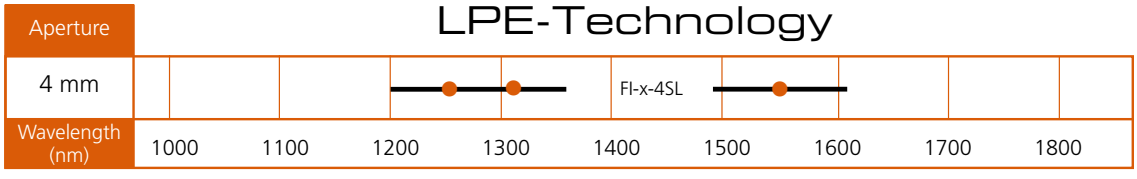

Single Stage Faraday Isolators

Technical Overview

The compact LINOS Faraday isolators in this section use a single stage rotator. The length is kept to a minimum with the use of powerful permanent magnets in an optimized geometry. Rotation of the exit polarizer provides a maximum extinction over a certain range around the central wavelength. The entrance and exit polarizers are polarizing beam splitter cubes. The blocked radiation is diverted by 90° and is readily available for other applications. At 30 dB, the specification of the isolator is sufficient for most standard applications. For specialized applications, selected isolators with an extinction up to 45 dB are available. An even higher extinction is provided by the two stage isolator series.

Wavelength Tuning

The Verdet constant of the TGG crystal is dependent upon wavelength and temperature. In order to compensate for different temperatures or different wavelengths, it is possible to tune the isolator in order to achieve maximum extinction. Tuning the isolator is accomplished by rotating the holder of the exit polarizer with respect to an engraved angular scale.

The graph shows the typical reduction factor of the transmission ($\Delta\lambda$) that is due to the tuning of the isolator to a wavelength λ that is different from the design wavelength λ_0. The bar has a length that covers the wavelength range for which $0.95 < T(\Delta\lambda) < 1.05$. The bullet indicates the design wavelength λ_0. The overall transmission of a Faraday isolator is equal to $T_t = T_0 \times T(\Delta\lambda)$, where T_0 is a factor that represents the transmission of the polarizers. At the design wavelength the overall transmission of the Faraday isolator is $T_0 > 90$ %.

Applications

The following single stage LINOS Faraday isolators are suitable for all lasers operating in the range especially:

- Ar+ and Kr+ lasers
- Other Ion lasers
- HeNe lasers
- Other gas lasers
- Dye lasers
- Diode lasers
- Ti:Sapphire lasers
- Cr:LiCAF lasers
- Short pulse lasers
- Mode-synchronized lasers
- Alexandrite lasers

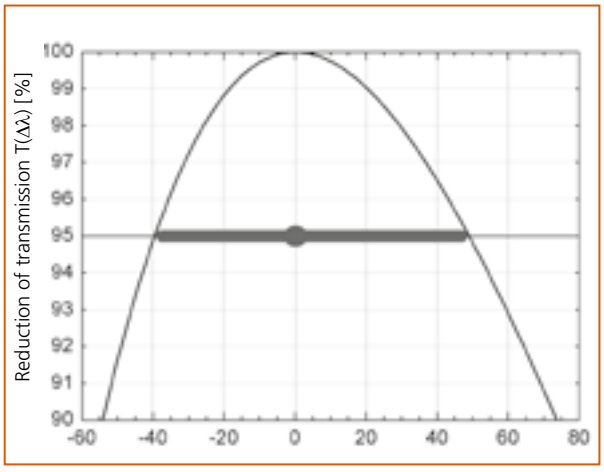

Tuning of design wavelength $\Delta\lambda$

QIOPTIQ Photonics for Innovation
An Excelitas Technologies Company

Isolators with 2 mm Aperture, SV Series

FI-x-2SV

- Isolation better than 30 dB / typically 38-42 dB over the entire wavelength range
- Custom isolation values on request
- TGG crystal
- Rare earth magnet
- Output polarizer, 360° rotation, engraved tuning scale
- Access to blocked beam

- Mounting 2SV-version: via two M3 threaded holes at the bottom side, 20 mm separation

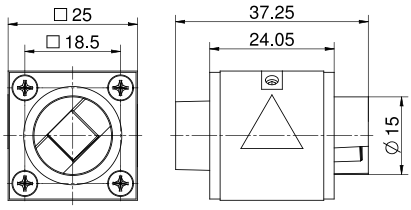

FI-x-2SV (x = 530, 630, 680 nm)

Isolators with 2 mm Aperture, SV Series

Product	Isolation, guaranteed/ typical (dB)	Transmission at design wavelength (%)	Transmision at boundary wavelength (%)	Tuning range typical (nm)	Aperture Ø (mm)	Dimensions (mm)	Damage threshold @ 1.2 ps pulses (J/cm²)	Damage threshold @ 8 ns pulses (J/cm²)	Part No.
FI-530-2SV	>30/38-42	>90	>85	505 - 565	2	25x25x37	0.1 @ 530 nm	0.5 @ 532 nm	84501010007
FI-630-2SV	>30/38-42	>90	>85	595 - 670	2	25x25x37	0.1 @ 630 nm	0.6 @ 632 nm	84501011000
FI-680-2SV	>30/38-42	>90	>85	645 - 725	2	25x25x37	0.2 @ 680 nm	0.7 @ 680 nm	84501010009

Subject to technical changes

A closer look

The excellent quality of the high-precision LINOS magneto- and electro-optics from Qioptiq is a testament to decades of experience at both Gsänger and Qioptiq. More than 50-year history of these products is marked by immense customer satisfaction, and has established Qioptiq as a leader in laser technology.

Dr. Gsänger, founder of Gsänger Optics in Munich, was instrumental in the success of electro-optics in laser technology.

Isolators with 3.3 and 5 mm Aperture, SC Series

FI-x-3SC / FI-x-5SC

- Extremely compact design
- Isolation better than 30 dB, typically 38-42 dB over the entire wavelength range
- TGG crystal
- Rare earth magnet
- Access to blocked beam

- Brewster polarizers (BP) available
- High power (HP versions) include optically contacted polarizers
- Mounting: via four M2 threaded holes on the bottom side and backside

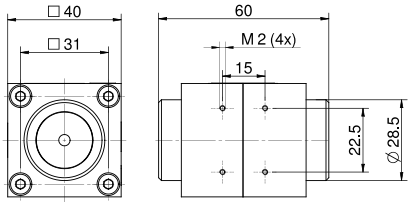

FI-x-3SC (x = 488, 980, 1060, 1120 nm)
FI-x-3SC HP (x = 1030, 1060 nm)

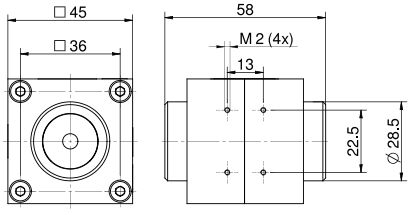

FI-x-5SC (x = 488, 930, 1060, 1120 nm)
FI-x-5SC HP (x = 1030, 1060 nm)

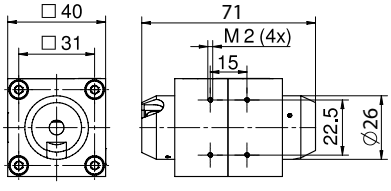

FI-1060-3SC-BP

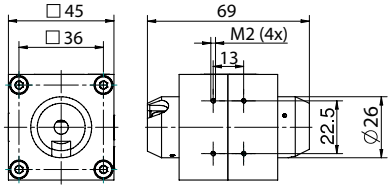

FI-1060-5SC-BP

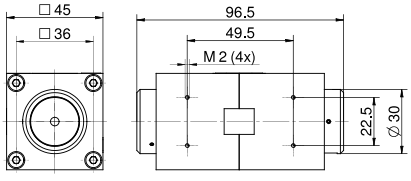

FI-1210-3SC, FI-1210-5SC

Isolators with 3.3 and 5 mm aperture, SC Series

Product	Isolation, guaranteed/ typical (dB)	Transmission at design wavelength (%)	Transmision at boundary wavelength (%)	Tuning range typical (nm)	Aperture Ø (mm)	Dimen-sions (mm)	Damage threshold @ 1.2 ps pulses (J/cm²)	Damage threshold @ 8 ns pulses (J/cm²)	Part No.
FI-488-3SC HP	> 35/38-42	> 90	-	478 - 498	3.3	40x40x60	0.3 @ 488 nm	6.5 @ 488 nm	845110900016
FI-488-5SC HP	> 35/38-42	> 90	-	478 - 498	5	45x45x58	0.3 @ 488 nm	6.5 @ 488 nm	845110900013
FI-930-5SC	> 30/38-42	> 90	> 85	880 - 990	5	45x45x58	0.2 @ 930 nm	0.9 @ 930 nm	84501037007
FI-980-3SC	> 30/38-42	> 90	> 85	925 - 1040	3.3	40x40x60	0.2 @ 980 nm	1.0 @ 980 nm	84501036004
FI-1030-3SC HP	> 32/38-42	> 94	> 85	1025 - 1064	3.3	40x40x60	0.6 @ 1030 nm	8.2 @ 1030 nm	845110100194
FI-1030-5SC HP	> 32/38-42	> 94	> 85	1025 - 1064	5	45x45x58	0.6 @ 1030 nm	8.2 @ 1030 nm	845110100196
FI-1060-3SC HP	> 32/38-42	> 94	> 85	1030 - 1090	3.3	40x40x60	0.6 @ 1060 nm	8.5 @ 1060 nm	845110100156
FI-1060-3SC BP	> 30/ >30	> 90	-	1060	3.3	40x40x71	-	15.7 @ 1060 nm	845110100011
FI-1060-5SC HP	> 32/38-42	> 94	> 85	1030 - 1090	5	45x45x58	0.6 @ 1060 nm	8.5 @ 1060 nm	845110100195
FI-1060-5SC BP	> 30/ >30	> 90	-	1060	5	45x45x69	-	15.7 @ 1060 nm	84501037002
FI-1120-3SC	> 30/38-42	> 90	> 85	1080 - 1170	3.3	40x40x60	0.2 @ 1120 nm	1.1 @ 1120 nm	845110100057
FI-1120-5SC	> 30/38-42	> 90	> 85	1080 - 1170	5	45x45x58	0.2 @ 1120 nm	1.1 @ 1120 nm	845110100009
FI-1210-3SC	> 30/38-42	> 90	> 85	1160 - 1260	3.3	45x45x96	0.3 @ 1210 nm	1.2 @ 1210 nm	845110100043
FI-1210-5SC	> 30/38-42	> 90	> 85	1160 - 1260	5	45x45x96	0.3 @ 1210 nm	1.2 @ 1210 nm	845110100053

Subject to technical changes

QIOPTIQ Photonics for Innovation
An Excelitas Technologies Company

Low Outgassing Isolators with 3.3 mm Aperture, LO Series

FI-x-3SC LO

Our extensive experience and innovations in optical solutions for semiconductor manufacturing have led to the first ever Low Outgassing Faraday Isolators. These Isolators are ideally suited for integration in encapsulated and high-power laser systems in the wavelength range from the violet to the NIR. The unique design emits 25-times less volatile organic compounds (VOCs) than conventionally produced isolators.

Optically contacted, fused-silica input and output polarizers ensure high damage threshold while delivering highest isolation of 33 dB and outstanding transmittance of 95% in the NIR and 86% in the violet.

They feature a 3.5 mm clear aperture and a patented magnet system, which enables an exceptionally compact design footprint.

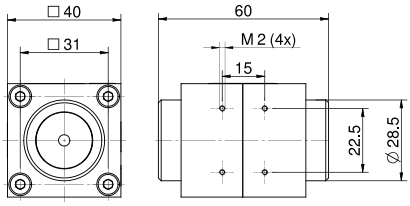

Less is more

These LO versions emit 25-times less volatile organic compounds than usual, combined with highest isolation as well as high damage threshold.

- Emitting 25-times less volatile organic compounds (VOC) than conventionally produced isolators
- Sophisticated, low outgassing design and assembly
- Isolation ≥ 33 dB, typically 38-42 dB over the entire wavelength range
- Extremely compact design
- Optically contacted polarizers for high damage threshold and long lasting quality
- Rare earth magnet
- Access to blocked beam
- Stable and flexible mounting via four M2 threaded holes on the bottom side and backside
- Custom wavelengths and specifications upon request
- Integrated waveplate optional

Low outgassing Isolators with 3.3 mm aperture, LO Series

Product	Isolation, guaranteed/ typical (dB)	Transmission at design wavelength (%)	Transmision at boundary wavelength (%)	Tuning range typical (nm)	Aperture Ø (mm)	Dimen-sions (mm)	Damage threshold @ 1.2 ps pulses (J/cm²)	Damage threshold @ 8 ns pulses (J/cm²)	Part No.
FI-405-3SC LO	> 33/38-42	≥ 86	≥ 86	400 - 410	3.3	40x40x60	0.2 @ 405 nm	2.6 @ 488 nm	845110900026
FI-1030-3SC LO	> 33/38-42	≥ 95	≥ 90	1025 - 1064	3.3	40x40x60	0.6 @ 1030 nm	8.2 @ 1030 nm	845110100230
FI-1060-3SC LO	> 33/38-42	≥ 95	≥ 90	1030 - 1090	3.3	40x40x60	0.6 @ 1060 nm	8.5 @ 1060 nm	845110100231

Subject to technical changes

High Power Faraday Isolators with 3.5 mm and 5 mm Aperture, XP Series

FI-1060-x-SC XP

- Extreme compact design
- Isolation better than 30 dB
- Suitable for high laser power above 50W
- Low thermal lens effect
- Low absorption magneto-optical crystal
- Strong rare earth magnet
- Mounting: via four M2 threaded holes at the bottom side and at backside
- Damage threshold 8.5 J/cm² at 8 ns 1064 nm

- Custom wavelengths and specifications on request
- Available with integrated wave-plate on request
- This product is export controlled according to regulation (EC) No. 428/2009, list item 6A005. Shipping is subject to the existence of a valid export license, if necessary.

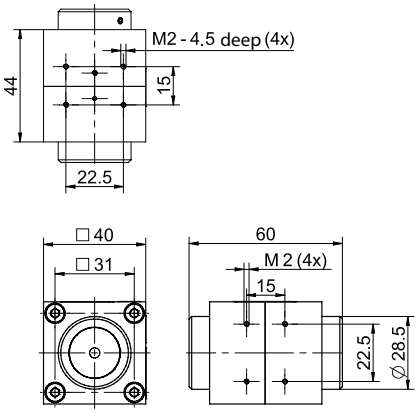

FI-1060-3SC XP

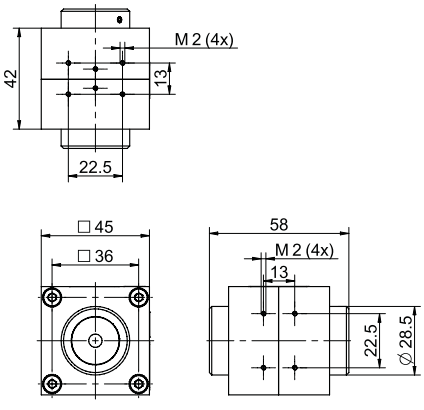

FI-1060-5SC XP

Forget thermal lensing

These Isolators are ideally suited for integration in medium to high power laser systems (CW laser power P ≥ 50W) in the wavelength range from red to NIR.

The XP Series Isolators are uniquely designed with a low absorption magneto-optical material that results in significantly lower thermal lens effect and enhanced optical isolation.

High Power Faraday Isolators with 3.5 mm and 5 mm aperture, XP Series

Product	Isolation, guaranteed/ typical (dB)	Transmission at design wavelength (%)	Transmision at boundary wavelength (%)	Tuning range typical (nm)	Aperture Ø (mm)	Dimen-sions (mm)	Damage threshold @ 1.2 ps pulses (J/cm²)	Damage threshold @ 8 ns pulses (J/cm²)	Part No.
FI-1060-3SC XP	>30	>94	>85	1030-1090	3.3	40x40x60	0.6 @ 1060 nm	8.5 @ 1060 nm	845110900030
FI-1060-5SC XP	>30	>94	>85	1030-1090	5	45x45x58	0.6 @ 1060 nm	8.5 @ 1060 nm	845110900029

Subject to technical changes

QIOPTIQ Photonics for Innovation
An Excelitas Technologies Company

Rotatable Faraday Isolator with 3.5 mm Aperture

Rotatable Faraday isolator in OEM mount

- Single stage Faraday Isolator
- Rotatable isolator housing (for arbitrary input polarization)
- Compact design
- Mounting option for half-wave plate at the optical output
- Aperture: Ø 3.5 mm
- Isolation: 32 dB (typically 38-42 dB)
- Mounting: via mounting bracket
- Damage threshold: 8.5 J/cm² at 8 ns 1064 nm

- Custom wavelengths and specifications on request
- Available with integrated half-wave plate on request

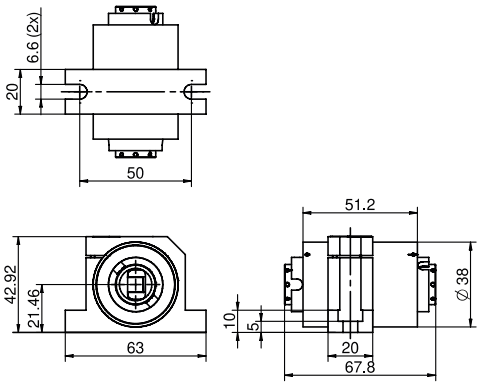

Rotatable Faraday Isolator with 3.5 mm aperture

Product	Isolation, guaranteed/ typical (dB)	Transmission at design wavelength (%)	Transmision at boundary wavelength (%)	Tuning range typical (nm)	Aperture Ø (mm)	Dimen-sions (mm)	Damage threshold @ 1.2 ps pulses (J/cm²)	Damage threshold @ 8 ns pulses (J/cm²)	Part No.
FI-1030-3SC RO	>32	>92	>85	1025-1064	3.3	45x43x67	0.6 @ 1030 nm	8.2 @ 1030 nm	845110100253

Subject to technical changes

Improved flexibility

These Isolators are ideally suited for integration in laser systems in cases where the output polarization orientation is neither horizontal nor perpendicular. The new rotatable Faraday Isolator series provides easy alignment of the Isolator-input polarization according to the output polarization of the laser system.

Isolators with 5 mm Aperture, SV Series

FI-x-5SV

- Isolation better than 30 dB, typically 38-42 dB over the entire wavelength range
- Custom isolation values on request
- TGG crystal
- Rare earth magnet
- Output polarizer, 360° rotation, engraved tuning scale (not available for FI-405-5SV)
- Access to blocked beam (not available for FI-405-5SV)

- Optional version with optically contacted polarizers on request
- FI-405-5SV optically contacted polarizers as standard
- Mounting: via two M4 threaded holes on the bottom side and the back side, 30 mm separation (5SV-version), or via base plate (not available for FI-405-5SV)
- Base plate included (not available for FI-405-5SV)

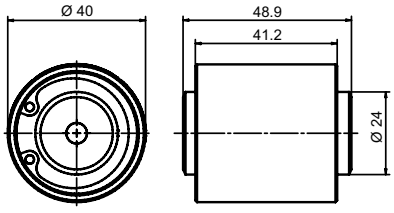

FI-405-5SV

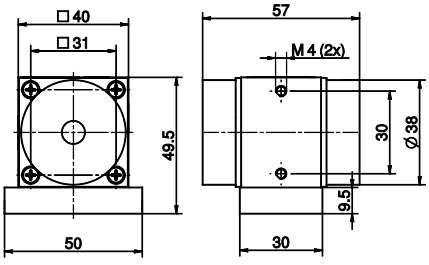

FI-x-5SV (x = 530, 630, 680, 730, 780, 810, 850 nm)

Isolators with 5 mm aperture, SV Series

Product	Isolation, guaran-teed/ typical (dB)	Trans-mission at design wavelength (%)	Trans-mision at boundary wavelength (%)	Tuning range typical (nm)	Aper-ture Ø (mm)	Dimen-sions (mm)	Dimensions base pate (LxWxH) (mm)	Damage threshold @ 1.2 ps pulses (J/cm²)	Damage threshold @ 8 ns pulses (J/cm²)	Part No.
FI-405-5SV	> 35	> 88	> 85	400 - 420	5	Ø40x48.9		0.2 @ 405 nm	2.6 @ 405 nm	845110100131
FI-530-5SV HP	> 30/38-42	> 90	> 85	515 - 550	5	40x40x57	50x30x9.5	0.3 @ 530 nm	7.0 @ 530 nm	845110100197
FI-630-5SV	> 30/38-42	> 90	> 85	595 - 670	5	40x40x57	50x30x9.5	0.1 @ 630 nm	0.6 @ 630nm	84501013004
FI-680-5SV	> 30/38-42	> 90	> 85	645 - 725	5	40x40x57	50x30x9.5	0.1 @ 680 nm	0.7 @ 680 nm	845110100126
FI-730-5SV	> 30/38-42	> 90	> 85	690 - 780	5	40x40x57	50x30x9.5	0.2 @ 730 nm	0.7 @ 730 nm	84501013034
FI-780-5SV	> 30/38-42	> 90	> 85	740 - 830	5	40x40x57	50x30x9.5	0.2 @ 780 nm	0.8 @ 780 nm	84501013008
FI-810-5SV	> 30/38-42	> 90	> 85	765 - 865	5	40x40x57	50x30x9.5	0.2 @ 810 nm	0.8 @ 810 nm	84501013033
FI-850-5SV	> 30/38-42	> 90	> 85	805 - 905	5	40x40x57	50x30x9.5	0.2 @ 850 nm	0.8 @ 850 nm	84501013027

Subject to technical changes

Isolators for NIR with 4 mm Aperture and Magneto-Optical Crystal Film

- Extremely small size
- Isolation better than 35 dB
- Faraday Material: magneto-optical crystal film in saturation
- Rare earth magnet
- Output polarizer, 360° rotation
- Access to blocked beam

- Max. cw power: 8 W

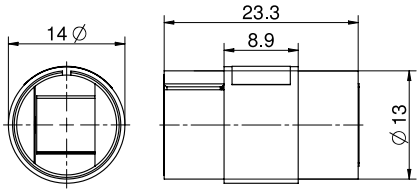

Isolators with 4 mm aperture with magneto-optical crystal film

Product	Isolation, guaranteed (dB)	Transmission at design wavelength (%)	Transmision at boundary wavelength (%)	Tuning range typical (nm)	Aperture Ø (mm)	Dimensions (mm)	Damage threshold @ 8 ns pulses (J/cm²)	Part No.
FI-1250-4SL	> 35	> 85	> 80	1200 - 1300	4	14x23.3	1.0 @ 1250 nm	845110200004
FI-1310-4SL	> 35	> 90	> 85	1260 - 1360	4	14x23.3	1.0 @ 1310 nm	84501071000
FI-1550-4SL	> 35	> 90	> 85	1485 - 1615	4	14x23.3	1.3 @ 1550 nm	84501072000

Subject to technical changes

Customized isolators ...

.. are our passion. We are keen to develop customized isolator and rotator versions for your application.

Isolators with a Broad Tuning Range

Technical Overview

The function of the tunable LINOS Faraday isolators in the following section is based on a single stage isolator. Precision mechanics allow a continuous adjustment of the interaction between the magnetic field and the TGG crystal without moving any optical components.

It is possible to set the rotation angle to any value between 0° to 45° within the wavelength range in order to study the effects of varying degrees of feedback. Easy access to the blocked beam is provided by polarizing beam splitter cubes, which divert the blocked beam by 90°.

Precision mechanics allow the exact reproduction of adjustments previously established. With the addition of an optional micrometer display, an angular resolution in the arc minute range is achievable. The incorporation of very powerful magnets ensures a compact and efficient design.

Operation

The isolator can be mounted on rods, cylindrical mounts or by using the assembly surfaces so that the laser polarization can be oriented horizontally or vertically. The entry and exit polarizers can be easily cleaned by removing the security rings.

Applications

These isolators are suitable for all lasers operating in the ranges 430-460 nm and 500-1100 nm wavelength range especially for:

- Ar+ and Kr+ lasers
- Other Ion lasers
- HeNe lasers
- Other gas lasers
- Diode lasers
- Nd:YAG lasers
- Ti: Sapphire lasers
- Cr:LiCAF lasers
- Dye lasers
- Alexandrite lasers
- Mode-locked lasers
- Short-pulse lasers
- Tunable lasers

Tunable Isolators with 5 mm Aperture, SV/SI Series

FI-x/y-5SV / FI-x/y-5SI

- Continuous adjustment for wavelength without movement of optical components
- Tunable with maximum transmission and isolation over the complete wavelength range
- Isolation better than 30 dB, typically 38-42 dB over the entire wavelength range
- Custom isolation values on request
- TGG crystal
- Access to blocked beam

- Mounting: via two M4 threaded holes on the bottom side and the back side, 20 mm separation (5SV-version), 55 mm separation (5SI-version), or via base plate, or via angle bracket (5SV-version only)
- Base plate included, angle bracket included (5SV-version only)

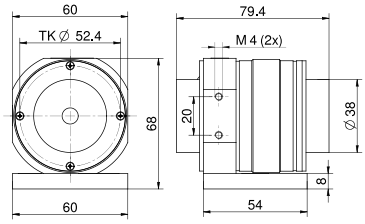

FI-x/y-5SV

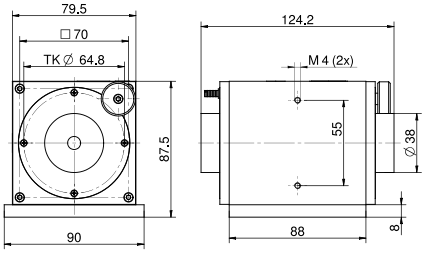

FI-600/1100-5SI

Tunable Isolators with 5 mm aperture, SV/SI Series

Product	Isolation, guaranteed/ typical (dB)	Transmission at design wavelength (%)	Tuning range typical (nm)	Aperture Ø (mm)	Dimensions (mm)	Dimensions base pate (LxWxH) (mm)	Damage threshold @ 1.2 ps pulses (J/cm²)	Damage threshold @ 8 ns pulses (J/cm²)	Part No.
FI-430/460-5SV	> 30/38-42	> 90	430 - 460	5	60x60x79.4	54x60x8	0.1 @ 460 nm	3.7 @ 460 nm	84501046001
FI-500/820-5SV	> 30/38-42	> 90	500 - 820	5	60x60x79.4	54x60x8	0.2 @ 820 nm	0.8 @ 820 nm	84501041000
FI-600/1100-5SI	> 30/38-42	> 90	600 - 1100	5	79.5x79.5x124.2	88x90x8	0.2 @ 1060 nm	1.1 @ 1060 nm	84501044000

Subject to technical changes

Tunable Isolator with 8 mm Aperture

- Continuous adjustment for wavelength without movement of optical components
- Tunable with maximum transmission and isolation over the complete wavelength range
- Isolation better than 30 dB, typically 38-42 dB over the entire wavelength range
- Custom isolation values on request
- TGG crystal
- Access to blocked beam

- Mounting: via two M4 threaded holes at the bottom side and the back side, 55 mm separation, or via base plate
- Base plate included

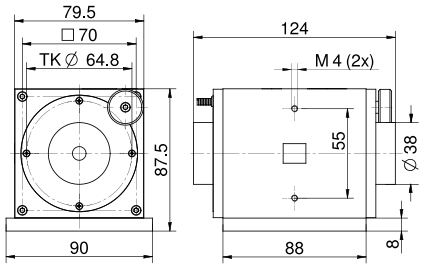

High quality

Precision engineering parts enable smooth continuous wavelength adjustment. Without movement of the optics a broad wavelength range is realized.

Tunable Isolator with 8 mm aperture

Product	Isolation, guaranteed/ typical (dB)	Transmission at design wavelength (%)	Tuning range typical (nm)	Aperture Ø (mm)	Dimensions (mm)	Dimensions base pate (LxWxH) (mm)	Damage threshold @ 1.2 ps pulses (J/cm²)	Damage threshold @ 8 ns pulses (J/cm²)	Part No.
FI-600/1100-8SI	>30/38-42	>90	600 - 1100	8	79.5x79.5x124	88x90x8	0.2 @ 1060 nm	1.1 @ 1060 nm	84501045000

Subject to technical changes

Two Stage Faraday Isolators

Technical Overview

Diode lasers are extremely sensitive to reflected radiation. Standard Faraday isolators typically achieve between 30 dB and 40 dB isolation, which in some cases is not sufficient to suppress undesirable feedback.

Our two stage LINOS Faraday isolators were developed for the special requirements of diode lasers and square the standard isolation of single stage Faraday isolators. At the heart of this development is the use of two coupled isolator stages together with the best polarizers available on the market.

This configuration combines the exit polarizer of the first stage with the entry polarizer of the second stage to form one central polarizer.

Arranging the polarity of the two magnets to be opposite to each other results in two benefits: The polarization direction of the transmitted light remains unchanged in the transmission direction and the effect of both magnetic fields is enhanced. Therefore this configuration also leads to a more compact isolator and a reduction of the optical path length which in turn enhances the optical quality of the LINOS Faraday isolators.

All optical surfaces are antireflection coated and the surfaces normal to the beam axis are tilted. The polarizers are mounted in a way that allows easy cleaning of the external optical surfaces. This guarantees that the isolation is not reduced by residual reflections and scattering from the isolator. Based on this special design a guaranteed 60 dB isolation at the design wavelength, respectively within the adjustment range, makes Linos two stage Faraday isolators the best on the market.

Applications

All two stage LINOS Faraday isolators are typically used to improve the power and frequency stability of diode lasers used in spectroscopy, interferometry, metrology, and precision control systems as well as in alignment applications. Since the output polarization and the beam position are conserved for all two stage LINOS Faraday isolators, the influence of the smallest feedback effects on the laser can be quantitatively examined.

Two-Stage Faraday Isolators, Tunable, TVC/TIC Series

FI-x-TV / FI-x-TI

- Tunable with maximum isolation over the complete wavelength range
- Two coupled isolator stages in series
- Especially high isolation > 60 dB
- TGG crystal
- Customized central wavelength on request

- Mounting TVC-Version: via two M4 threaded holes on the bottom side, 30 mm separation
- Mounting TIC-Version: via 8 M2 threaded holes on the bottom side and on the back side, 22.5 mm separation

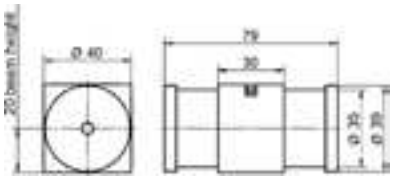

FI-x-5TVC

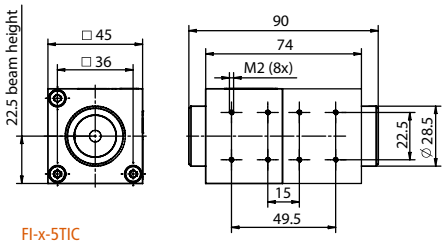

FI-x-5TIC

Single stage is not sufficient?

Some lasers are extremely sensitive to back reflection. The two stage Faraday Isolators provide extreme isolation of 60dB to keep the power of such lasers stable. Additional, some Isolator designs can be used for injection locking.

Two-Stage Faraday Isolators, tunable, TVC/TIC Series

Product	Isolation, guaranteed (dB)	Transmission at design wavelength (%)	Tuning range typical (nm)	Aperture Ø (mm)	Dimensions (mm)	Damage threshold @ 1.2 ps pulses (J/cm²)	Damage threshold @ 8 ns pulses (J/cm²)	Part No.
FI-650-5TVC	≥ 60	≥ 80	630 - 680	5	40x40x79	0.1 @ 650 nm	0.7 @ 650 nm	845110100200
FI-670-5TVC	≥ 60	≥ 80	650 - 700	5	40x40x79	0.1 @ 670 nm	0.7 @ 670 nm	845110100201
FI-710-5TVC	≥ 60	≥ 80	700 - 740	5	40x40x79	0.2 @ 710 nm	0.7 @ 710 nm	845110100202
FI-760-5TVC	≥ 60	≥ 80	735 - 790	5	40x40x79	0.2 @ 760 nm	0.8 @ 760 nm	845110100203
FI-780-5TVC	≥ 60	≥ 80	750 - 800	5	40x40x79	0.2 @ 780 nm	0.8 @ 780 nm	845110100059
FI-810-5TVC	≥ 60	≥ 80	780 - 840	5	40x40x79	0.2 @ 810 nm	0.8 @ 810 nm	845110100075
FI-850-5TVC	≥ 60	≥ 80	815 - 870	5	40x40x79	0.2 @ 850 nm	0.9 @ 850 nm	845110100080
FI-880-5TVC	≥ 60	≥ 80	850 - 910	5	40x40x79	0.2 @ 880 nm	0.9 @ 880 nm	845110100204
FI-920-5TIC	≥ 60	≥ 80	905 - 965	5	45x45x90	0.2 @ 920 nm	0.9 @ 920 nm	845110100205
FI-950-5TIC	≥ 60	≥ 80	930 - 990	5	45x45x90	0.2 @ 950 nm	1.0 @ 950 nm	845110100206
FI-980-5TIC	≥ 60	≥ 80	950 - 1025	5	45x45x90	0.2 @ 980 nm	1.0 @ 980 nm	845110100207
FI-1060-5TIC	≥ 60	≥ 80	1025 - 1080	5	45x45x90	0.2 @ 1060 nm	1.1 @ 1060 nm	845110100173

Subject to technical changes

Two Stage Faraday Isolators, Tunable

Technical Overview

The tunable isolators of the DLI series were developed for the special requirements of diode lasers in the visible spectrum and combine the outstanding isolation of a two stage isolator with the flexibility of a tunable isolator.

The DLI isolators are easily integrated into an existing setup and can be adjusted to match any wavelength without changing the laser polarization or displacing the laser beam. The isolators can be coarsely tuned by altering the effective magnetic field in the two isolator stages. A precise wavelength adjustment is possible by rotating the central polarizer with a micrometer set screw. The blocked radiation is deflected out of the isolator at 90° with respect to the beam axis. It is not absorbed by the interior of the isolator, but is available at the side surfaces of the polarizer and the exit window.

Injection Locking

The DLI injection version inverts this operating mode and uses the exit window for in-coupling of the seed laser for injection locking while decoupling efficiently the master and the slave laser from each other at the same time. With this setup stable mode locking (e.g. of Ti:Sapphire lasers) is simplified.

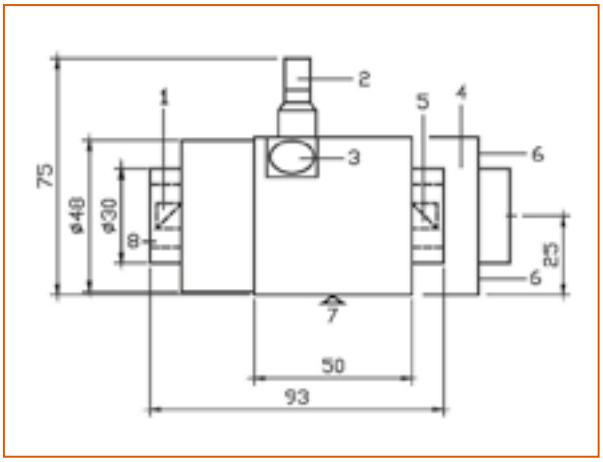

1 Entrance polarizer
2 Tuning micrometer screw
3 Exit window
4 Waveband adjuster
5 Exit polarizer
6 Adjusting screw
7 Mounting surface
8 Protective ring

Two-Stage Faraday Isolators, Tunable, DLI Series

- Tunable with maximum isolation and maximum transmittance over the complete wavelength range
- Two coupled isolator stages in series
- Especially high isolation ≥ 60 dB
- TGG crystal
- Rare earth magnet
- Input polarization = output polarization
- Individually calibrated adjustment curve supplied with each isolator
- Simple integration of DLI isolators is possible. They can be adjusted easily without changing laser polarization or beam position.
- Mounting: via four M4 threaded holes at the bottom side and at the back side, 40x40 mm separation, or via base plate
- Base plate included
- Access to blocked beam via window
- DLI injection locking versions available

A closer look

Injection locking versions use exit window for incoupling of seed laser for injection locking. This enables stable mode locking.

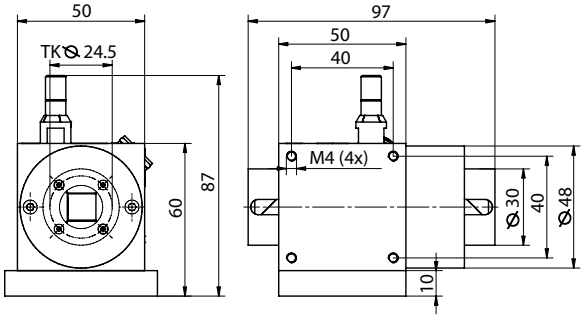

Two-Stage Faraday Isolators, tunable, DLI Series

Product	Isolation, guaranteed (dB)	Transmission at design wavelength (%)	Tuning range typical (nm)	Aperture Ø (mm)	Dimen-sions (mm)	Dimensions base pate (LxWxH) (mm)	Damage threshold @ 1.2 ps pulses (J/cm²)	Damage threshold @ 8 ns pulses (J/cm²)	Part No.
DLI 1	≥ 60	≥ 80	745 - 890	5	50x50x97	50x60x10	0.2 @ 890 nm	0.9 @ 890 nm	84501003000
DLI 2	≥ 60	≥ 80	610 - 700	5	50x50x97	50x60x10	0.1 @ 700 nm	0.7 @ 700 nm	84501002000
DLI 3	≥ 60	≥ 80	650 - 760	5	50x50x97	50x60x10	0.2 @ 760 nm	0.8 @ 760 nm	84501001000

Subject to technical changes

Pockels Cells and Laser Modulators

Electro-optical modulators are divided into modulators (for applications outside of the laser cavity) and Pockels cells (for applications within the laser cavity) on the following pages.

You can choose from a large selection of crystals for a variety of applications, apertures and laser outputs, covering the entire wavelength range from 300 nm to 3 µm. The consistently high Qioptiq quality and incomparable value of our products is assured by a combination of our many years of experience, a sophisticated design, modern engineering with computer simulations, and state-of-the-art processing. For details, please contact Excelitas' Customer Service.

Qioptiq quality criteria:

- Best possible extinction ratio for each crystal
- High transmission
- Patented isolation system minimizes piezoelectric oscillation for exceptionally precise switching operations (optional)

Special features:

On request we can customize products for wavelengths in the 250 nm to 3 µm range.

Ideal areas of application:

Phase and intensity modulation; Q-switching; pulse picking; pulse slicing; regenerative amplifiers

Pockels Cells

The Electro-Optic Effect

The linear electro-optic effect, also known as the Pockels effect, describes the variation of the refractive index of an optical medium under the influence of an external electrical field. In this case certain crystals become birefringent in the direction of the optical axis which is isotropic without an applied voltage.

When linearly polarized light propagates along the direction of the optical axis of the crystal, its state of polarization remains unchanged as long as no voltage is applied. When a voltage is applied, the light exits the crystal in a state of polarization which is generally elliptical.

This way tunable phase plates can be realized in the same manner as conventional polarization optics. Phase plates introduce a phase shift between the ordinary and the extraordinary beam. Unlike conventional optics, the magnitude of the phase shift can be adjusted with an externally applied voltage and a $\lambda/4$ or $\lambda/2$ retardation can be achieved at a given wavelength. This presupposes that the plane of polarization of the incident light bisects the right angle between the axes which have been electrically induced. In the longitudinal Pockels effect the direction of the light beam is parallel to the direction of the electric field. In the transverse Pockels cell they are perpendicular to each other. The most common application of the Pockels cell is the switching of the quality factor of a laser cavity.

Q-Switching

Laser activity begins when the threshold condition is met: the optical amplification for one round trip in the laser resonator is greater than the losses (output coupling, diffraction, absorption, scattering). The laser continues emitting until either the stored energy is exhausted, or the input from the pump source stops. Only a fraction of the storage capacity is effectively used in the operating mode. If it were possible to block the laser action long enough to store a maximum energy, then this energy could be released in a very short time period.

A method to accomplish this is called Q-switching. The resonator quality, which represents a measure of the losses in the resonator, is kept low until the maximum energy is stored. A rapid increase of the resonator quality then takes the laser high above threshold, and the stored energy can be released in a very short time. The resonator quality can be controlled as a function of time in a number of ways. In particular, deep modulation of the resonator quality is possible with components that influence the state of polarization of the light. Rotating the polarization plane of linearly polarized light by 90°, the light can be guided out of the laser by a polarizer.

The modulation depth, apart from the homogeneity of the 90° rotation, is only determined by the degree of extinction of the polarizer. The linear electro-optic (Pockels) effect plays a predominant role besides the linear magneto-optic (Faraday) and the quadratic electro-optic (Kerr) effect. Typical electro-optic Q-switches operate in a so called $\lambda/4$ mode.

a) Off Q-Switching

Light emitted by the laser rod (1) is linearly polarized by the polarizer (2). If a λ/4 voltage is applied to the Pockels cell (3), then on exit, the light is circularly polarized. After reflection from the resonator mirror (4) and a further passage through the Pockels cell, the light is once again polarized, but the plane of polarization has been rotated by 90°. The light is deflected out of the resonator at the polarizer, but the resonator quality is low and the laser does not start to oscillate. At the moment the maximum storage capacity of the active medium has been reached, the voltage of the Pockels cell is turned off very rapidly; the resonator quality increases immediately and a very short laser pulse is emitted. The use of a polarizer can be omitted for active materials which show polarization dependent amplification (e.g. $Nd:YAlO_3$, Alexandrite, Ruby, etc.).

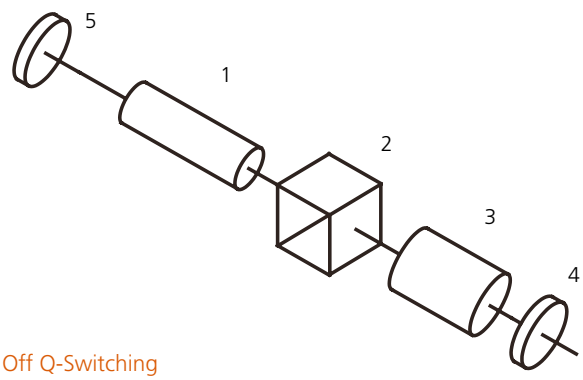

Off Q-Switching

b) On Q-Switching

Unlike off Q-switching, a λ/4 plate (6) is used between the Pockels cell (3) and the resonator mirror (4). If no voltage is applied to the Pockels cell the laser resonator is blocked: no laser action takes place. A voltage pulse opens the resonator and permits the emission of laser light.

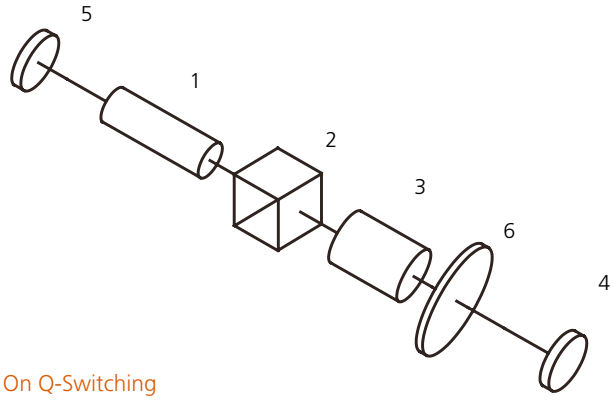

On Q-Switching

Pulse Picking

Typically femto second lasers emit pulses with a repetition rate of several 10 MHz. However, many applications like regenerative amplifying require slower repetition rates. Here a Pockels cell can be used as an optical switch: by applying ultra fast and precisely timed λ/2-voltage pulses on the Pockels cell, the polarization of the laser light can be controlled pulse wise. Thus, combined with a polarizer the Pockels cell works as an optical gate.

Selection Criteria

The selection of the correct Q-switch for a given application is determined by the excitation of the laser, the required pulse parameters, the switching voltage, the switching speed of the Pockels cell, the wavelength, polarization state and degree of coherence of the light.

Type of Excitation

Basically, both off and on Q-switching are equivalent in physical terms for both cw and for pulse pumped lasers. On Q-switching is, however, recommended in cw operation because a high voltage pulse and not a rapid high voltage switch-off is necessary to generate a laser pulse. This method also extends the

life time of the cell. Over a long period of time, the continuous application of a high voltage would lead to electrochemical degradation effects in the KD*P crystal. We advice the use of an on Q-switching driver.

Off Q-switching is more advantageous for lasers stimulated with flash lamps because the λ/4 plate is not required. In order to prevent the electrochemical degradation of the KD*P crystal in the off Q-switching mode we recommend a trigger scheme in which the high voltage is turned off between the flashlamp pulses and turned on to close the laser cavity before the onset of the pump pulse.

The CPC- and SPC-series cells are recommended for diode pumped solid state lasers. These cells are ultra compact and will operate in a short length resonator: This is necessary to achieve very short laser pulses.

Pulse Parameters

The LM n IM, and LM n SG series cells are recommended for lasers with a power density of up to 2 GW/cm². The LM n SG cells are used for lasers with very high amplification. The SG cells with Sol-Gel technology have the same transmission as the immersion cells.

Brewster Pockels cells are recommended for lasers with low amplification, such as Alexandrite lasers. The passive resonator losses are minimal due to a high transmission of 99%.

The CPC and SPC series cells are suitable for small, compact lasers and especially for OEM applications. They are available as dry cells with Sol Gel crystal and immersion cells.

The level of deuterium content in an electro-optical KD*P crystal influences the spectral position of the infrared edge. The higher the deuterium level the further the absorption edge is shifted into the infrared spectral region: for Nd:YAG at 1064 nm, the laser absorption decreases. Crystals, which are deuterated to > 98%, are available for lasers with a high repetition rate or a high average output power.

Double Pockels Cells

Using double Pockels cells can halve the switching voltage. This is achieved by switching two crystals electrically in parallel and optically in series. The damage threshold is very high and the cells are mainly used outside the resonator.

Electro-Optical Material

The selection of the electro-optic material depends on its transmission range. Furthermore, the laser parameters as well as the application have to be taken into account to choose the best suited cell and material type.

For wavelengths from 250 nm to 1.1 µm, longitudinal Pockels cells made of KD*P and a deuterium content of 95% should be considered. If the deuterium content is higher the absorption edge of the material is shifted further into the infrared. KD*P crystal cells with a deuterium content > 98% can be used up to 1.3 µm.

KD*P can be grown with high optical uniformity and is therefore recommended for large apertures.

The spectral window of BBO ranges from 0.25 µm to 1.3 µm. In addition, BBO crystals provide a low dielectric constant and a high damage threshold. Therefore, BBO is recommended for lasers with high repetition rate and high average powers.

RTP, with an optical bandwidth from 0.5 µm up to 3 µm, combines low switching voltage and high laser induced damage threshold. Together with its relative insensitivity for Piezo effects RTP is best suited for precise switching in high repetition rate lasers with super fast voltage drivers.

Suppression of Piezo effects

Like any other insulating material electro-optical crystals show Piezo effects when high voltage is applied. The extent of the Piezo ringing depends on the electro-optic material and usually its effect on the extinction ratio is negligible when used for Q-switching. However, for pulse picking applications, which require highly precise switching behaviour, Qioptiq offers specially Piezo damped Pockels cells which suppress these ringing effects efficiently.

State of Polarization

The CIQS-series cells are supplied with an integrated polarizer: the alignment of the Pockels cell relative to the polarizer thus becomes unnecessary. The rotational position of the cell relative to the resonator axis can be chosen at will. However, the polarization state of the light in the resonator can be determined by other effects, such as anisotropic amplification of the laser crystal, or Brewster surfaces of the laser rod. Consequently, the rotational position of the cell will be determined by these factors. Thin film polarizers are used and the substrate is mounted at the Brewster angle. A parallel beam displacement of 1 mm results from this configuration and can be compensated by adjusting the resonator.

50 years of experience

Since the foundation of Gsänger corporation in 1969 we are continuous improving our high end Pockels cells and Faraday isolators.

50 years of intensive research and development of electro-optical and magneto-optical modules enable us to offer excellent standard and customized Pockels cells and Faraday isolators, today and also in future.

Product Overview

	Aperture (mm)			
	8	10	12	16
KD*P				
Standard				
LM Series	●	●	●	●
CPC Series	●	●		
With Brewster Polarizer				
CIQS Series	●	●		
Transmission Line Cells				
LM 10, 50 Ω		●		
Double Pockels Cells				
DPZ Series	●			

	Aperture (mm)			
	2.6	3.6	4.6	5.6
BBO				
DBBPC Series	●	●	●	●
	2.7	3.2		
DBBPC HR Series	●	●		

QIOPTIQ Photonics for Innovation
An Excelitas Technologies Company

KD*P Pockels Cells, LM Series

LM-1064-8/10/12/16-IM/SG

- KD*P-based Pockels cells
- High crystal deuteration (typical): > 98%
- Damage threshold: > 2 GW/cm^2 at 1064 nm, 12 ns, 1 Hz (typical)

- Available as immersion (IM) or SolGel (SG) version
- All order numbers valid for 1064 nm

- Other specifications on request
- Please state the applied wavelength when ordering.

Standard Plus

Other specifications on request. Do you need a Pockels cell for another wavelength? Please ask us for available options.

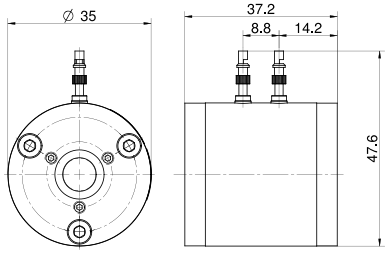

LM 8 (IM) (SG)

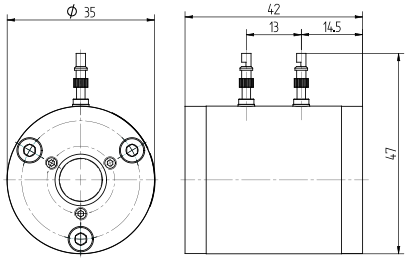

LM 10 (IM) (SG)

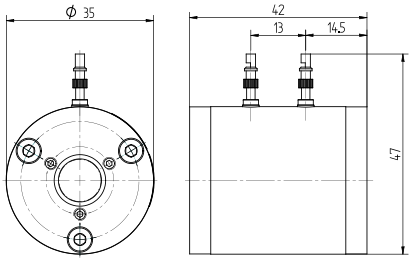

LM 12 (IM) (SG)

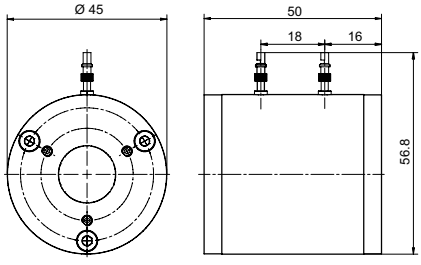

LM 16 (IM) (SG)

KD*P Pockels Cells, LM Series, 1064 nm

Product	Clear aperture Ø (mm)	Transmission typical (%)	Extinction ratio (voltage-free)	λ/4-voltage DC at 1064 nm, 20°C (kV)	Capacitance (pF)	Part No.
LM 8 IM	8	98	> 3000:1	3.2 +15% / -10%	4	84503011002
LM 8 SG	7.5	98	> 3000:1	3.2 +15% / -10%	4	84503006001
LM 10 IM	10	98	> 3000:1	3.2 +15% / -10%	6	84503012001
LM 10 SG	9.5	98	> 3000:1	3.2 +15% / -10%	6	84503007005
LM 12 IM	12	98	> 3000:1	3.2 +15% / -10%	8	84503013003
LM 12 SG	11	98	> 3000:1	3.2 +15% / -10%	8	84503008001
LM 16 SG	15	98	> 3000:1	3.4 +15% / -10%	10	84503009000

Subject to technical changes

KD*P Pockels Cells, CPC Series

CPC-1064-8/10-IM/SG

- KD*P-based Pockels cells
- Compact design for OEM applications
- High crystal deuteration (typical): > 98%
- Damage threshold: 2 GW/cm^2 at 1064 nm, 12 ns, 1 Hz (typical, not guaranteed)

- Available as immersion (IM) or SolGel (SG) version

- Other specifications on request
- Please state the applied wavelength when ordering.

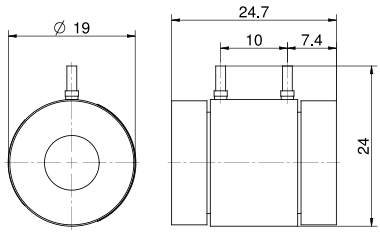

CPC 8 (IM) (SG)

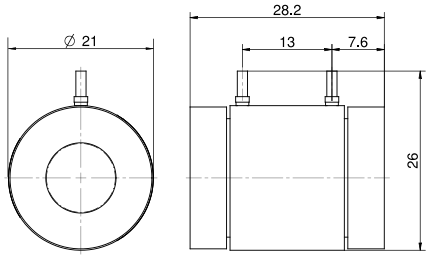

CPC 10 (IM) (SG)

KD*P Pockels Cells, CPC Series, 1064 nm

Product	Clear aperture Ø (mm)	Transmission typical (%)	Extinction ratio (voltage-free)	λ/4-voltage DC at 1064 nm, 20°C (kV)	Capacitance (pF)	Part No.
CPC 8 IM	8	97	> 3000:1	3.2 +15% / -10%	4	84503092001
CPC 8 SG	7.5	98	> 3000:1	3.2 +15% / -10%	4	84503093000
CPC 10 IM	10	97	> 3000:1	3.2 +15% / -10%	6	84503094001
CPC 10 SG	9.5	98	> 3000:1	3.2 +15% / -10%	6	84503096000

Subject to technical changes

The classic Q-switch

Our compact Pockels cell CPC series is the classic Q-switch. Easy to use and due to compact dimensions, easy to integrate in the laser cavity.

The standard design is best suited for many 1064 nm NdYAG-laser designs. Other wavelengths are available on request as well.

KD*P Pockels Cells, CIQS Series

CIQS-1064-8/10-IM-HD/SG-HD -WP

- KD*P-based Pockels cells
- With integrated, pre-adjusted Brewster polarizer
- Compact design for OEM applications
- High crystal deuteration (typical): > 98%
- Damage threshold: 1.5 GW/cm^2 at 1064 nm, 12 ns, 1 Hz (typical, not guaranteed)
- Available as immersion (IM) or SolGel (SG) version
- All order numbers valid for 1064 nm
- Other specifications upon request
- Please state the applied wavelength when ordering.
- Versions with integrated λ/4-waveplate available

Standard Plus

Other specifications and versions with integrated λ/4-waveplate available on request.

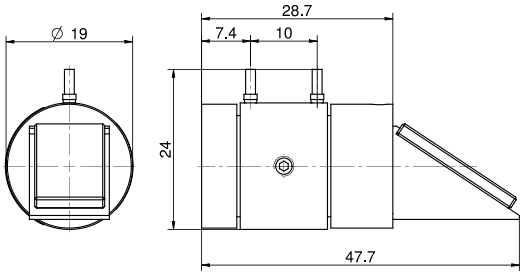

CIQS 8 (IM) (SG)

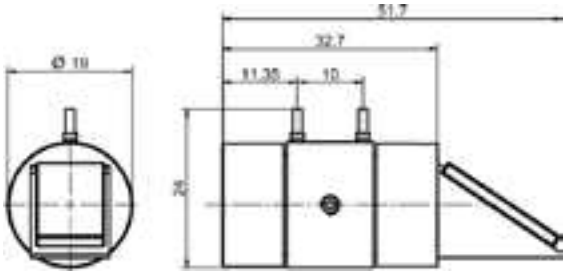

CIQS 8 (SG) (HD) (WP)

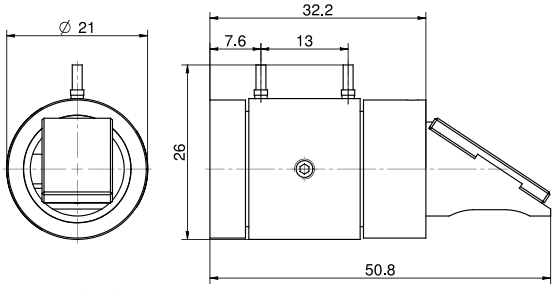

CIQS 10 (IM) (SG)

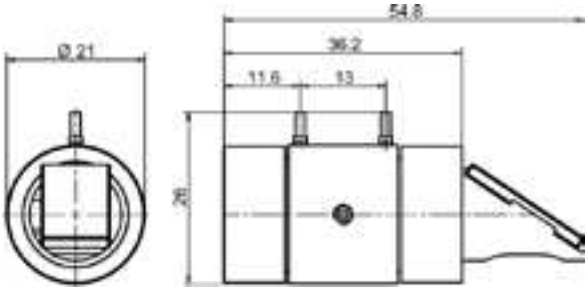

CIQS 10 (SG) (HD) (WP)

KD*P Pockels Cells, CIQS Series, 1064 nm

Product	Clear aperture Ø (mm)	Transmission typical (%)	Extinction ratio (voltage-free)	λ/4-voltage DC at 1064 nm, 20°C (kV)	Capacitance (pF)	Part No.
CIQS 8 IM HD	8	95	> 500:1	3.2 +15% / -10%	4	845130100004
CIQS 8 SG HD	7.5	95	> 500:1	3.2 +15% / -10%	4	845130100096
CIQS 10 IM HD	10	95	> 500:1	3.2 +15% / -10%	6	84503074001
CIQS 10 SG HD	9.5	95	> 500:1	3.2 +15% / -10%	6	84503075001
CIQS 8 SG HD WP	7.5	95	> 500:1	3.2 +15% / -10%	4	84503071023
CIQS 10 SG HD WP	9.5	95	> 500:1	3.2 +15% / -10%	6	845130100088

Subject to technical changes

KD*P Pockels Cells LM 10 SG, 50 Ohm Series

LM 10-755/1064-50 Ohm

Leveraging extensive experience and innovations in optical solutions for lasers and laser systems for industrial, medical and semiconductor applications, the new Qioptiq transmission line 50 Ohm Pockels cell provides ultra-fast switching in the nano-second and sub-nano-second range combined with excellent extinction and high transmission in a 50 Ohm impedance matching compact design.

These ultra-fast Pockels cells are ideally suited for integration in medical laser systems in cases where fast switching, pulse slicing or pulse picking is required.

- KD*P-based Pockels cell
- High crystal deuteration (typical): > 98%
- 50 Ohm type Pockels cell for use in transmission line configuration
- Suitable for fast switching and pulse slicing (rise / fall time: < 500 ps possible with suitable high voltage driver)

- Impedance approx. 50 Ohm (not guaranteed)
- BNC connectors
- Wavefront distortion: < λ/4
- Damage threshold: > 2 GW/cm² at 1064 nm, 12 ns, 1 Hz (typical)
- Crystal diameter: 10 mm
- Anti-reflection coating on crystal: SolGel (SG)

- Other specifications on request

Cut quicker

Our ultra-fast switching 50 Ohm Pockels cells, specially designed for medical laser sysems, are the ideal pulse slicer to generate sub-ns laser pulses.

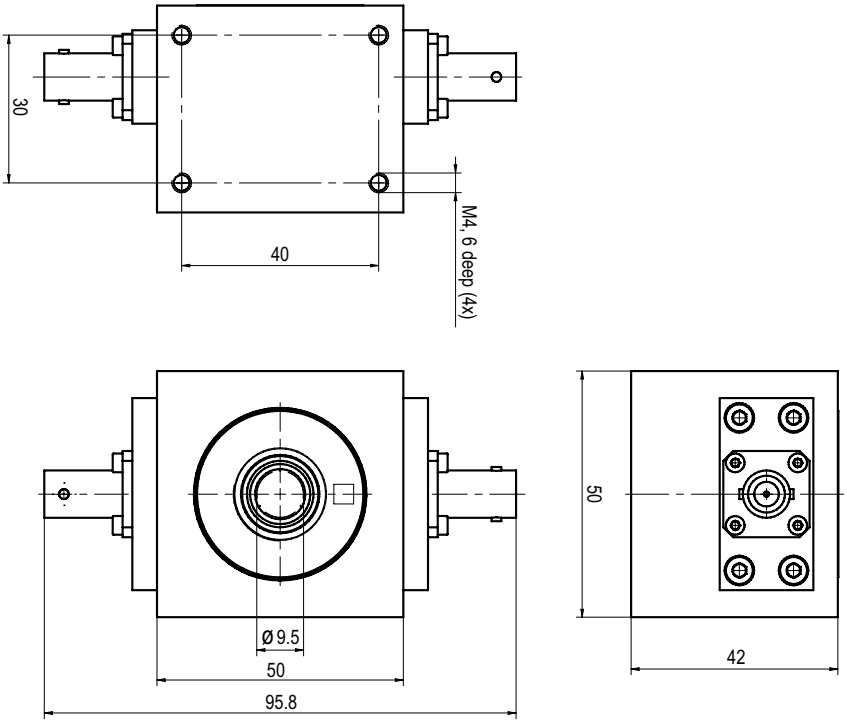

KD*P Pockels Cell, 50 Ohm Series

Product	Clear aperture Ø (mm)	Transmission typical (%)	Extinction ratio (voltage-free)	λ/4-Voltage DC, 20°C (kV)	Capacitance (pF)	Part No.
LM10 SG HD 50 Ohm 1064 nm	9.5	98	> 1000:1	3.2 at 1064 nm +15% / -10%	8	845130100092
LM10 SG HD 50 Ohm 755 nm	9.5	98	> 1000:1	2.3 at 755 nm +15% / -10%	8	845130100093

Subject to technical changes

QIOPTIQ Photonics for Innovation
An Excelitas Technologies Company

KD*P Double Pockels Cells, DPZ Series

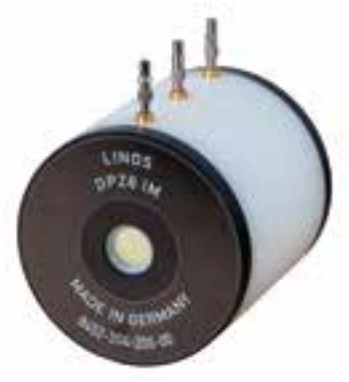

- KD*P-based Pockels cells
- Two crystals in series reduce the switching voltage by 50%
- High crystal deuteration (typical): > 98%
- Damage threshold: 2 GW/cm^2 at 1064 nm, 12 ns, 1 Hz (typical)
- For shutter and λ/2 applications

- Available as immersion (IM) or SolGel (SG) version
- λ/4-voltage: 1.6 kV at 1064 nm, 20°C
- All order numbers valid for 1064 nm

- Other specifications on request
- Please state the applied wavelength when ordering.

The faithful fast switch

The DPZ8 cells are reliable, easy-to-use electro-optical switches for many applications where fast switching of laser light is required.

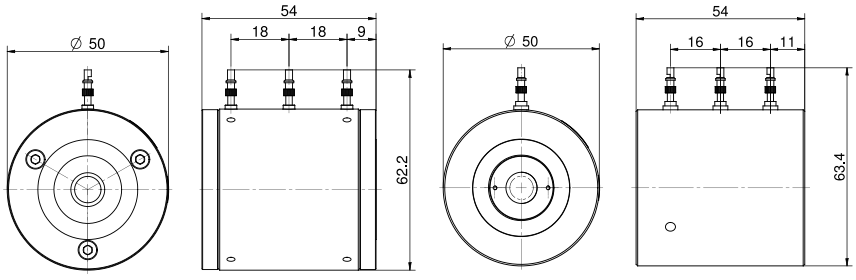

DPZ 8 (IM) DPZ 8 (SG)

KD*P Double Pockels Cells, DPZ Series, 1064 nm

Product	Clear aperture Ø (mm)	Transmission typical (%)	Extinction ratio (voltage-free)	λ/2-voltage at 1064 nm, 20°C (kV)	Capacitance (pF)	Part No.
DPZ 8 IM	8	95	> 1000:1	3.2 +15% / -10%	8	84503042000
DPZ 8 SG	7.5	95	> 1000:1	3.2 +15% / -10%	8	84503043005

Subject to technical changes

Our capabilities ...

.. regarding the famous LINOS magneto- and electro optics as well as detailed information about our expertise in products for illumination, transmission and detection you find here:

Please scan or click the QR-Code!

BBO Double Pockels Cells, DBBPC Series

- BBO-based double Pockels cells
- Two crystals in series reduce the switching voltage by 50%
- With piezo attenuator
- Suited for Q-switch applications with high repetition rates, pulse picking and regenerative amplifiers
- Damage threshold: > 4 J/cm^2 at 1064 nm, 74 ps, 1 Hz
- All order numbers valid for 1064 nm
- Other specifications on request
- Please state the applied wavelength when ordering.

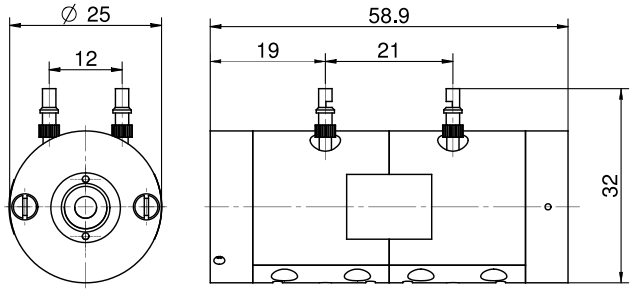

High quality

All Pockels cells of the DBBPC series feature a piezodamping and are ideally suited for applications which require precise switching.

BBO Double Pockels Cells, DBBPC Series, 1064 nm

Product	Clear aperture Ø (mm)	Transmission typical (%)	Extinction ratio (voltage-free)	λ/4-voltage DC at 1064 nm, 20°C (kV)	Capacitance (pF)	Part No.
DBBPC 3	2.6	98	> 1000:1	1.8 ± 15%	8	845130200010
DBBPC 4	3.6	98	> 1000:1	2.4 ± 15%	8	845130200011
DBBPC 5	4.6	98	> 1000:1	3.0 ± 15%	8	845130200001
DBBPC 6	5.6	98	> 1000:1	3.6 ± 15%	8	845130200008

Subject to technical changes

BBO Pockels Cells for High Switching Rates, DBBPC HR Series

The new LINOS Double BBO High-Repetition Pockels Cells (DBBPC HR) from Qioptiq enable the fastest possible switching rates available today with up to 1.3 MHz performance. Together with the low absorbing BBO crystals the DBBPC HR Pockels cells are perfectly suited for the next generation of fast high power regenerative amplifiers and pulse pickers.

- BBO Pockels Cell with 2 crystals in optical series
- For high switching rate applications up to 1.3 MHz
- For high average power applications
- Design wavelength 1030 nm (other wavelengths on request)
- Damage threshold @ 1064 nm, 74 ps: > 4 J/cm²
- Reduced switching voltage
- Suitable for quarter- and half-wave mode applications
- For Q-Switching, cavity dumping, regenerative amplifiers and pulse pickers

- Other specifications on request
- Please state the applied wavelength when ordering.
- This product is export controlled according to regulation (EC) No. 428/2009, list item 6A005. Shipping is subject to the existence of a valid export license, if necessary.

- All order numbers valid for 1030 nm

High End

Our improved double BBO crystal Pockels cells enables MHz repetition rates!

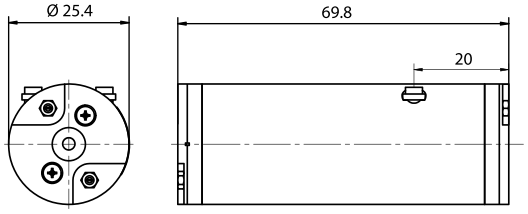

DBBPC 3 HR 1030 nm

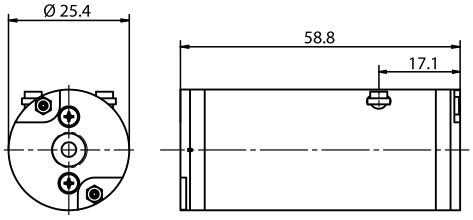

DBBPC 3.5 HR 1030 nm

BBO Pockels Cells for high switching rates, DBBPC HR Series, 1030 nm

Product	Clear aperture Ø (mm)	Transmission typical (%)	Extinction ratio (voltage-free)	Lambda/4 voltage @ 1030 nm (±15%, DC) (kV)	Capacitance (pF)	Part No.
DBBPC 3 HR 1030 nm	2.6	98	> 1000:1	1.4	8	845130200098
DBBPC 3.5 HR 1030 nm	3.3	98	> 1000:1	2.0	8	845130200106

Subject to technical changes

Pockels Cells Positioner

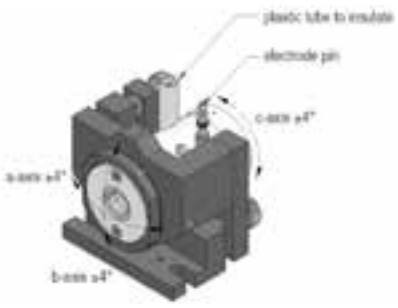

- Compact and stable design
- Easy adjustment of pitch, yaw and rotation
- Adjustment via fine-threaded screws
- For Pockels cells with a diameter up to 35 mm
- Optional special OEM modifications available

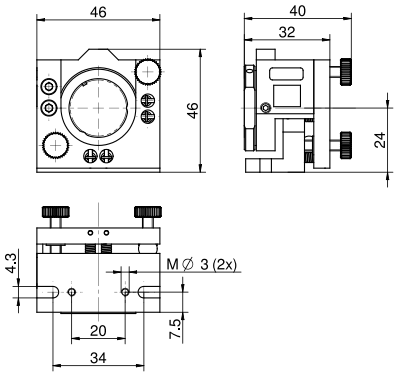

Positioner 25

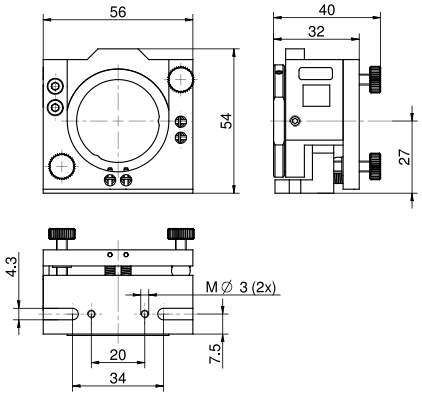

Positioner 35

Pockels Cells Positioner

Product	Dimensions (mm)	Beam height (mm)	Tilt range	Diameter Pockels cell (mm)	Part No.
Positioner 25	46 x 46 x 40	24	±4	12.7	84503021127
Positioner 25	46 x 46 x 40	24	±4	19	84503021190
Positioner 25	46 x 46 x 40	24	±4	21	84503021210
Positioner 25	46 x 46 x 40	24	±4	23	84503021230
Positioner 25	46 x 46 x 40	24	±4	25	84503021250
Positioner 25	46 x 46 x 40	24	±4	25.4	84503021254
Positioner 35	56 x 54 x 40	24	±4	35	84503021350

Laser Modulators

Technical Overview

Electro-optical crystals are characterized by their ability to change optical path length in function of an applied external voltage. This change depends on the direction of polarization of the irradiated light. At λ/2 voltage, the path length difference of orthogonally polarized beams is just half of the wavelength. With a suitable orientation of the crystals, the polarization direction of the irradiated light is rotated 90°: in this state the light is extinguished by a polarizer. Varying the applied voltage allows quick modulation of the laser beam intensity. The performance of an electro-optical modulator can be understood very simply as that of a retardation plate with electrically adjustable retardation.

The capability of fast tunable retardation can be either used for intensity modulation or for phase modulation of lasers.

LM 0202 series modulators use the transverse electro-optic effect: the direction of the light beam and electric field are orthogonal. In this configuration, long crystals with a small cross section have a low halfwave voltage.

Since most of the electro-optical crystals operate with a strong background of natural birefringence, a compensation scheme is used. Each modulator in the LM 0202 series has four crystals as a matched ensemble. These crystals are fabricated with deviations in length of less than 100 nm. The crystals are operated optically in series and electrically in parallel.

The crystal orientation of the LM 0202 and LM 0202P modulators has been optimized to minimize the retardation caused by natural birefringence. Just as in an ordinary retardation plate, the polarization of the laser beam has to be adjusted at 45° to the optical axis in order to achieve a proper 90° rotation.

If the laser beam is polarized in the direction of the optical axis, no polarization rotation, but pure phase retardation will occur. In principle this allows the user to operate the LM 0202 modulator as a phase modulator. In this configuration, optimized for minimum background retardation, two of the four crystals are electro-optically active for phase modulation. A special model, LM 0202 PHAS, is available with a crystal configuration that uses all four crystals for phase modulation.

The PM 25 phase modulator, is a Brewster modulator of high optical quality and should be used for loss sensitive applications, especially intracavity modulation. Mounting the modulator in the resonator is simple, as there is no beam deviation or displacement.

All modulators use electro-optical crystals that possess strong natural birefringence. The crystals are used in order of compensation and there is no beam deviation or displacement.

Electro-optic modulators generally require linearly polarized laser light. If the laser light is not sufficiently polarized by itself, an additional polarizer must be used.

The LM 0202 P intensity modulator has an integrated polarizer that is used as an analyzer.

The modulator voltage input plugs are isolated from the housing and directly connected to the crystals. A change of the laser intensity can be observed when the applied voltage is changed. By subsequently adjusting voltage and rotation, an extinction better than 250:1 can be achieved. Selected models with better extinction ratios are available on request.

Operating an electro-optical modulator between crossed, or parallel, polarizers yields an intensity variation given by the following formula:

$I = I_o \cdot \sin^2 (U/U_{\lambda/2} \cdot \pi/2)$
$U_{\lambda/2}$ - half wave voltage
I_o - input intensity
U - signal voltage

It has been assumed that the appropriate offset voltage has been applied for maximum extinction. The offset voltage causes a shift of the intensity curve over the voltage. The halfwave voltage is proportional to the wavelength λ, to the crystal thickness d and in reverse proportional to the crystal length l:

$$V_{\lambda/2} = \frac{\lambda\, d}{n_0^3\, r_{63}\, l}$$

Here n_0 is the refractive index of the ordinary beam and r_{63} the electro-optical coefficient of the crystal.

In many cases it is advantageous to select an offset voltage such that the first order intensity varies linearly with voltage. This is achieved by setting the offset voltage to the value required for maximum extinction minus
$\frac{1}{2} \cdot U_{\lambda/2}$

The LM 0202 series modulators are hermetically sealed. They can be operated at pressures from 100 mbar to 1500 mbar and at a temperature range between 0 °C to 50 °C.

Standard models are designed for horizontal operation. Modulators for vertical use are available on request. The modulator windows are easily cleaned with a mild organic solvent.

Applications

The LM 0202 or LM 13 series electro-optical modulators are typically used when intensity, power, phase or polarization state modulation is required. The devices are ideal for continuous or pulsed laser applications. Standard models, in many configurations, are available for wavelength ranges or for definite wavelengths between 250 to 1100 nm and operation up to 3000 nm is possible with special crystals.

The modulators are typically used with diode lasers, solid state lasers, ion lasers, gas lasers or white light lasers.

These devices are being used in the fields of reprography, stereo lithography, laser projection, optical storage, printing, research and development and communication engineering in the laser industry.

The PM 25 and PM-C-BB series are typically used for fast intra-cavity phase modulation. Therefore very fast control loops, with high feedback gain for frequency and phase stabilization, can be constructed for precision lasers.

Selection Criteria

The required wavelength and aperture are determined based on the existing laser system. Very high laser power, in the multiwatt range, requires a large aperture. Laser lines in the short wave spectral region can work problem free with modulators having low electro-optical sensitivity: this gives rise to advantages in bandwidth and size. A Brewster modulator of high optical quality should be used for loss sensitive applications, especially intracavity modulation.

Phase Modulators PM 25

- Two crystals at Brewster angle in order of compensation
- With Brewster windows
- Very high transmission
- Connectors: 4 mm banana plugs
- Different versions for wavelength ranges between 300 and 1100 nm

- Bandwidth (3 dB): 100 MHz
- Capacitance: 30 pF
- Max. continuous voltage: 1500 V
- Operating temperature: 10-45 °C
- Weight: 500 g (17.6 oz) approx.

- Please specify the wavelength or wavelength range and laser parameters when ordering
- Modifications and custom specifications on request

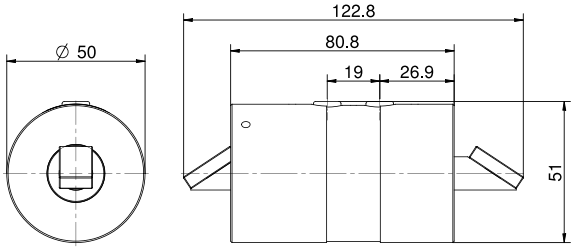

Phase Modulators PM 25

Product	Wavelength range (nm)	Power capability (W)	Transmission T (%)	Aperture (mm)	λ/10-voltage at 633 nm (V)	Part No.
PM25 ADP	400 - 650	100	>98	5 x 5	200 ±10 %	84502030000
PM25 KD*P	300 - 1100		>98	5 x 5	200 ±10 %	84502031000

Subject to technical changes

Modulation needed?

Our unique intensity, universal and phase modulators are ideal tools for fast and precise laser power, polarization or phase modulation.

Phase Modulators PM-C-BB

- Brewster-cut MgO-$LiNbO_3$ crystal
- Broad wavelength range 450 - 3000 nm (except $LiNbO_3$ absorption at 2.82 - 2.84 µm)
- High photorefractive damage threshold > 100 W/mm^2 @1064 nm (cw operation, wavelength dependent)
- High transmission
- Small residual amplitude modulation
- Compact design
- Capacitance: 10 pF
- Bandwidth: DC-500 MHz (> 10 MHz resonance-free)
- Connector: 1 x SMA

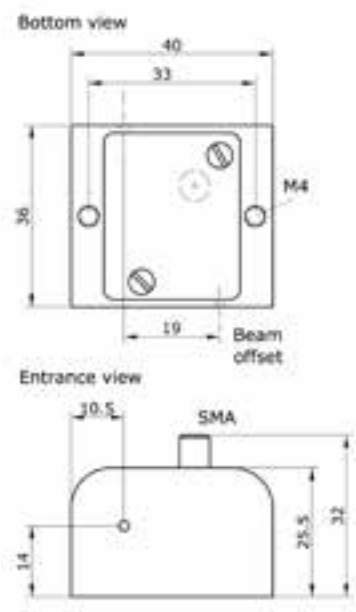

PM-C-BB

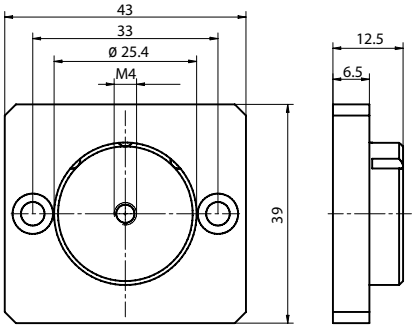

Adapter plate for 1" mirror mount

Phase Modulators PM-C-BB

Product	Wavelength range (nm)	Power capability at 1064 nm, cw operation, depends on wavelength (W/mm²)	Transmission T (%)	Aperture Ø (mm)	Clear aperture Ø (mm)	λ/10-voltage at 1064 nm (V)	Part No.
PM-C-BB	450 - 3000	> 100	> 98 (680 - 2000 nm)	1.9	1.5	150 +/- 10 %	845120900006
PM-C-BB (T)	450 - 3000	> 100	> 98 (680 - 2000 nm)	1.9	1.5	150 +/- 10 %	845120900007
Adapter plate for 1" mirror mount							845120900008

Subject to technical changes

Laser Modulators LM 13

- Different versions: universal modulator, intensity modulator (P) with thin film polarizer, phase modulator (PHAS)
- With 2 crystals in order of compensation
- Connectors: 4 mm banana plugs
- Different versions for wavelength ranges between 250 and 1100 nm

- Extinction: > 250:1 (VIS, IR) or > 100:1 (UV) (measured at continuous wave between crossed polarizers)
- Bandwidth (3 dB): 100 MHz
- Capacitance: 46 pF
- Max. continuous voltage: 800 V
- Operating temperature: 10 - 45 °C
- Weight: 500 g (28.2 oz) approx.

- Transmission: measured without / with polarizing cube
- Please specify the wavelength or wavelength range and laser parameters when ordering

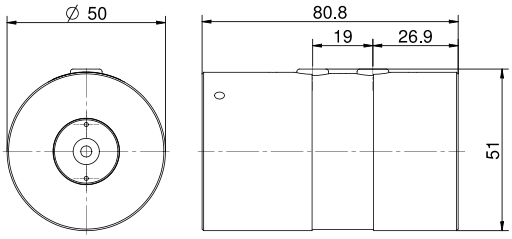

Laser Modulators LM 13, UV, KD*P

Product	Wavelength range (nm)	Power capability (W)	Transmission T (%)	Aperture Ø (mm)	λ/2-voltage at 355 nm (V)	Part No.
LM 13	300 - 390	1.0	> 94 / -	1.5	240 ± 10 %	84502023019
LM 13 PHAS	300 - 390	1.0	> 95 / -	1.5	240 ± 10 %	84502035019

Subject to technical changes

Laser Modulators LM 13, VIS, KD*P

Product	Wavelength range (nm)	Power capability (W)	Transmission T (%)	Aperture (mm)	λ/2-voltage at 633 nm (V)	Part No.
LM 13	400 - 850	0.1	> 98 / -	3 x 3	420 ± 10 %	84502020000
LM 13	400 - 850	0.1	> 98 / -	5 x 5	700 ± 10 %	84502021000
LM 13	400 - 850	5.0	> 95 / -	3 x 3	420 ± 10 %	84502023000
LM 13	400 - 850	5.0	> 95 / -	5 x 5	700 ± 10 %	84502024000
LM 13 P	400 - 850	0.1	> 98 / 90	3 x 3	420 ± 10 %	84502026000
LM 13 P	400 - 850	0.1	> 98 / 90	5 x 5	700 ± 10 %	84502027000
LM 13 P	400 - 850	5.0	> 95 / 87	3 x 3	420 ± 10 %	84502029000
LM 13 P	400 - 850	5.0	> 95 / 87	5 x 5	700 ± 10 %	84502030010
LM 13 PHAS	400 - 850	0.1	> 98 / -	3 x 3	420 ± 10 %	84502032000
LM 13 PHAS	400 - 850	0.1	> 98 / -	5 x 5	700 ± 10 %	84502033000
LM 13 PHAS	400 - 850	5.0	> 95 / -	3 x 3	420 ± 10 %	84502035000
LM 13 PHAS	400 - 850	5.0	> 95 / -	5 x 5	700 ± 10 %	84502036000

Subject to technical changes

Laser Modulators LM 13, IR, KD*P

Product	Wavelength range (nm)	Power capability (W)	Transmission T (%)	Aperture (mm)	λ/2-voltage at 1064 nm (V)	Part No.
LM 13	650 - 1000	5.0	> 95 / -	3 x 3	710 ± 10 %	84502023015
LM 13	950 - 1100	5.0	> 94 / -	3 x 3	710 ± 10 %	84502023016
LM 13 P	650 - 1000	5.0	> 95 / 92	3 x 3	710 ± 10 %	84502029015
LM 13 P	950 - 1100	5.0	> 94 / 91	3 x 3	710 ± 10 %	84502029016
LM 13 PHAS	650 - 1000	5.0	> 95 / -	3 x 3	710 ± 10 %	84502035015
LM 13 PHAS	650 - 1000	5.0	> 95 / -	5 x 5	1180 ± 10 %	84502036015
LM 13 PHAS	950 - 1100	5.0	> 94 / -	3 x 3	710 ± 10 %	84502035016
LM 13 PHAS	950 - 1100	5.0	> 94 / -	5 x 5	1180 ± 10 %	84502036016

Subject to technical changes

Laser Modulators LM 13, IR, KD*P, High Power

Product	Wavelength range (nm)	Power capability (W)	Transmission T (%)	Aperture Ø (mm)	λ/2-voltage at 1064 nm (V)	Part No.
LM 13	700 - 950	10	> 94 / -	1.0	710 ± 10 %	84502023017
LM 13 PHAS	950 - 1100	20	> 93 / -	1.0	710 ± 10 %	84502023018
LM 13 P	700 - 950	10	> 94 / 91	1.0	710 ± 10 %	84502029017
LM 13 PHAS	700 - 950	10	> 94 / -	1.0	710 ± 10 %	84502035017
LM 13 PHAS	700 - 950	10	> 94 / -	3.0	1180 ± 10 %	84502036017
LM 13	950 - 1100	20	> 93 / -	1.0	710 ± 10 %	84502035018
LM 13 PHAS	950 - 1100	20	> 93 / -	3.0	1180 ± 10 %	84502036018

Subject to technical changes

Laser Modulators LM 0202

- Different versions: universal modulator, intensity modulator (P) with thin film polarizer, phase modulator (PHAS)
- With 4 crystals in order of compensation
- Connectors: 4 mm banana plugs
- Different versions for wavelength ranges between 250 and 1100 nm

- Extinction: > 250:1 (VIS, IR) or > 100:1 (UV) (measured at continuous wave between crossed polarizers)
- Bandwidth (3 dB): 100 MHz
- Capacitance: 82 pF
- Max. continuous voltage: 800 V
- Operating temperature: 10 - 45 °C
- Weight: 800 g (17.6 oz) approx.

- Transmission: measured without / with polarizing cube
- Please specify the wavelength or wavelength range and laser parameters when ordering
- Modulator series LM 0202 are also availble with ADP crystals for an even more precise performance

A closer look

ADP has less and weaker piezo ringing and stronger temperature change of switching voltage compared to KD*P.

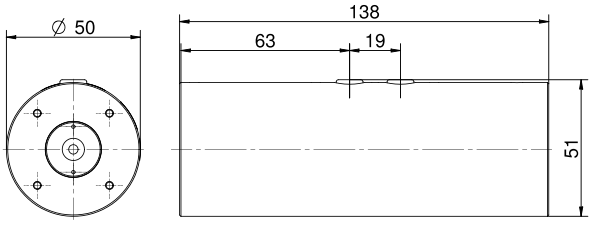

Laser Modulators LM 0202, UV, KD*P

Product	Wavelength range (nm)	Power capability (W)	Transmission T (%)	Aperture Ø (mm)	λ/2-voltage at 355 nm (V)	Part No.
LM 0202	300 - 390	1	> 92 / -	1.5	120 ± 10 %	84502049007
LM 0202 PHAS	300 - 390	1	> 93 / -	1.5	120 ± 10 %	84502055010

Subject to technical changes

Laser Modulators LM 0202, VIS, ADP

Product	Wavelength range (nm)	Power capability (W)	Transmission T (%)	Aperture (mm)	λ/2-voltage at 633 nm (V)	Part No.
LM 0202	400 - 650	0.1	> 97 / -	3 x 3	210 ± 10 %	84502001000
LM 0202	400 - 650	0.1	> 97 / -	5 x 5	350 ± 10 %	84502002000
LM 0202	400 - 650	5.0	> 92 / -	3 x 3	210 ± 10 %	84502010000
LM 0202	400 - 650	5.0	> 92 / -	5 x 5	350 ± 10 %	84502011000
LM 0202 P	400 - 650	0.1	> 97 / 89	3 x 3	210 ± 10 %	84502004000
LM 0202 P	400 - 650	0.1	> 97 / 89	5 x 5	350 ± 10 %	84502005000
LM 0202 P	400 - 650	5.0	> 92 / 84	3 x 3	210 ± 10 %	84502013000
LM 0202 P	400 - 650	5.0	> 92 / 84	5 x 5	350 ± 10 %	84502014000
LM 0202 PHAS	400 - 650	0.1	> 97 / -	3 x 3	210 ± 10 %	84502007000
LM 0202 PHAS	400 - 650	0.1	> 97 / -	5 x 5	350 ± 10 %	84502008000
LM 0202 PHAS	400 - 650	5.0	> 92 / -	3 x 3	210 ± 10 %	84502016000
LM 0202 PHAS	400 - 650	5.0	> 92 / -	5 x 5	350 ± 10 %	84502017000

Subject to technical changes

Laser Modulators LM 0202, VIS, KD*P

Product	Wavelength range (nm)	Power capability (W)	Transmission T (%)	Aperture (mm)	λ/2-voltage at 633 nm (V)	Part No.
LM0202	400-1100	5.0	> 70 / -	5 x 5	350 ± 10 %	845120100002
LM 0202	400 - 850	0.1	> 97 / -	3 x 3	210 ± 10 %	84502040000
LM 0202	400 - 850	0.1	> 97 / -	5 x 5	350 ± 10 %	84502041000
LM 0202	400 - 850	5.0	> 92 / -	3 x 3	210 ± 10 %	84502049000
LM 0202	400 - 850	5.0	> 92 / -	5 x 5	350 ± 10 %	84502050005
LM 0202 P	400 - 850	0.1	> 97 / 89	3 x 3	210 ± 10 %	84502043000
LM 0202 P	400 - 850	0.1	> 97 / 89	5 x 5	350 ± 10 %	84502044000
LM 0202 P	400 - 850	5.0	> 92 / 84	3 x 3	210 ± 10 %	84502052000
LM 0202 P	400 - 850	5.0	> 92 / 84	5 x 5	350 ± 10 %	84502053000
LM 0202 PHAS	400 - 850	0.1	> 97 / -	3 x 3	210 ± 10 %	84502046000
LM 0202 PHAS	400 - 850	0.1	> 97 / -	5 x 5	350 ± 10 %	84502047000
LM 0202 PHAS	400 - 850	5.0	> 92 / -	3 x 3	210 ± 10 %	84502055000
LM 0202 PHAS	400 - 850	5.0	> 92 / -	5 x 5	350 ± 10 %	84502056000

Subject to technical changes

Laser Modulators LM 0202, IR, KD*P

Product	Wavelength range (nm)	Power capability (W)	Transmission T (%)	Aperture (mm)	λ/2-voltage at 1064 nm (V)	Part No.
LM 0202	400 - 1100	5.0	> 90 / -	5 x 5	590 ± 10 %	845120100002
LM 0202	650 - 1000	5.0	> 92 / -	3 x 3	360 ± 10 %	84502049001
LM 0202	650 - 1000	5.0	> 92 / -	5 x 5	590 ± 10 %	84502050006
LM 0202	950 - 1100	5.0	> 90 / -	3 x 3	360 ± 10 %	84502049004
LM 0202	950 - 1100	5.0	> 90 / -	5 x 5	590 ± 10 %	84502050007
LM 0202 P	650 - 1000	5.0	> 92 / 89	3 x 3	360 ± 10 %	84502052001
LM 0202 P	650 - 1000	5.0	> 92 / 89	5 x 5	590 ± 10 %	84502053001
LM 0202 P	950 - 1100	5.0	> 90 / 87	3 x 3	360 ± 10 %	84502052004
LM 0202 P	950 - 1100	5.0	> 90 / 87	5 x 5	590 ± 10 %	84502053002
LM 0202 PHAS	650 - 1000	5.0	> 92 / -	3 x 3	360 ± 10 %	84502055006
LM 0202 PHAS	650 - 1000	5.0	> 92 / -	5 x 5	590 ± 10 %	84502056001
LM 0202 PHAS	950 - 1100	5.0	> 90 / -	3 x 3	360 ± 10 %	84502055001
LM 0202 PHAS	950 - 1100	5.0	> 90 / -	5 x 5	590 ± 10 %	84502056002

Subject to technical changes

Laser Modulators LM 0202, IR, KD*P, High Power

Product	Wavelength range (nm)	Power capability (W)	Transmission T (%)	Aperture Ø (mm)	λ/2-voltage at 1064 nm (V)	Part No.
LM 0202	700 - 950	10	> 91 / -	1.0	360 ± 10 %	84502049006
LM 0202	700 - 950	10	> 91 / -	3.0	590 ± 10 %	84502050010
LM 0202	950 - 1100	20	> 89 / -	1.0	360 ± 10 %	84502049005
LM 0202	950 - 1100	20	> 89 / -	3.0	590 ± 10 %	84502050008
LM 0202 P	700 - 950	10	> 91 / 88	1.0	360 ± 10 %	84502052012
LM 0202 P	700 - 950	10	> 91 / 88	3.0	590 ± 10 %	84502053005
LM 0202 P	950 - 1100	20	> 85 / 82	1.0	360 ± 10 %	84502052011
LM 0202 P	950 - 1100	20	> 85 / 82	3.0	590 ± 10 %	84502053003
LM 0202 PHAS	700 - 950	10	> 91 / -	1.0	360 ± 10 %	84502055009
LM 0202 PHAS	700 - 950	10	> 91 / -	3.0	590 ± 10 %	84502056005
LM 0202 PHAS	950 - 1100	20	> 89 / -	1.0	360 ± 10 %	84502055008
LM 0202 PHAS	950 - 1100	20	> 89 / -	3.0	590 ± 10 %	84502056004

Subject to technical changes

Digital Pulse Amplifier DIV 20

- Digital pulse amplifier for all LM 0202 and LM 13 laser modulators with half wave voltage up to 590 V.
- Generates rectangular voltage pulses of variable pulse length and adjustable amplitude.
- Control via 5 V TTL signal.

Specifications:

- Signal voltage [1) 2)]: 30-590 V
- Rise-/fall time (10-90 %) [3)]: < 28 ns, (typ. 20-25 ns at 350 V, typ. 23-27 ns at 590 V)
- Repetition rate [4)]: 1 to 20 MHz
- Offset-voltage [1) 2)]: 0-590 V
- External control via Sub-D25p-female-port
- Line voltage: 90-264 V
- Line frequency: 47-63 Hz

1) Relative to ground
2) This voltage can be set manually or externally by a control voltage from 0 to +10 V (input impedance 5 kΩ) with a speed of <100 ms from 70 V to 480 V (rise) or from 480 V to 70 V (fall) respectively
3) The optical rise-/fall time is achieved with a modulator LM 0202, connected via the standard connection cable (L = 80 cm)
4) Typical maximum signal voltage at repetition rate 5 MHz 300 V, at 3 MHz 400 V and at 1 MHz 590 V

Digital Pulse Amplifier DIV 20

Product	Part No.
Digital Pulse Amplifier DIV 20	845020620000

SINE-Amplifier for Phase Modulators

- Compact design
- Can be used with PM-C-BB, PM 25, LM 13 and LM 0202
- Large modulation bandwidth
- High output voltage
- Cost effective
- Modulator cable and adapters included
- Power-supply included (on request with universal power supply and snap-in adapters for EU, US, GB, AUS)

- Input waveform: SINE-Wave
- Input voltage: max. +13 dBm
- Bandwidth with LM 0202: appr. 4-7 MHz
- Bandwidth with PM-C-BB: appr. 5-12 MHz
- Max. output voltage with LM 0202: 200 V @ 5-7 MHz frequency
- Max. output voltage with PM-C-BB appr.: >500 V @ 8-12 MHz frequency
- Supply-voltage (power-supply incl.): +12 V DC
- Dimensions: 115x65x70 mm³

SINE-Amplifier for Phase Modulators

Product	Part No.
SINE-Amplifier for Phase Modulators	845180000014

Bring us your Most Complex Photonic Challenge

Engage Excelitas to unlock the full potential of your custom solution

Whether you need discrete components, modules, sub-assemblies or complete turnkey solutions, Excelitas will develop the perfect solution for your very specific requirements.

Our extensive experience enables us to provide our customers with solutions that deliver exceptional performance, optimized cost and manufacturability, ultimately ensuring market success.

Expertise

We work equally well with OEMs, from initial concept, including on a build-to-print basis for established designs, to delivery.

Our goal is to optimize production processes to achieve the highest quality at the lowest cost. Our collaborative process and detailed understanding of our customers' applications are key to our success.

Manufacturing

With years of experience in manufacturing a wide range of products using many different manufacturing processes, Excelitas is able to reduce time to market for the products we design and optimize performance, quality and cost.

Multiple sites around the world manufacture with a wide range of technological expertise, qualifications and state-of-the-art facilities.

As an Excelitas Technologies company, Qioptiq delivers cutting-edge technology for all photonic and optical requirements of OEM system development and scientific research alike. Global production capabilities and state-of-the-art manufacturing guarantee an impressive portfolio of products and solutions. Join us on a journey of discovery in our Crystal Technology brochure

Enabling the future through light.

www.excelitas.com

North America
+1 (800) 429 0257

Europe
+49 (0) 551 6935 0

Asia/Pacific
+65 64 99 7777

© 2023 Qioptiq Photonics GmbH & Co. KG. All rights reserved. Qioptiq reserves the right to change this document and the technical data contained herein at anytime without notice and disclaims liability for editorial, pictorial and typographical inaccuracies.

O-CT-BR-Crystal-Technology_EN_2023-04 | 2424-302-001-02