THIS DRAWING IS UNPUBLISHED. RELEASED FOR PUBLICATION 20
© COPYRIGHT 20 BY TYCO ELECTRONICS CORPORATION. ALL RIGHTS RESERVED.

LOC	DIST
A	66

REVISIONS

P	LTR	DESCRIPTION	DATE	DWN	APVD
	A	RELEASED	03JUN2013	CC	TE
	B	ECR-18-014280	10SEP2018	TB	TE
	C	ECR-19-004567	21MAR2019	TB	GB

PART NUMBER	REVISION	DESCRIPTION	FEED TYPE
2151925-1	C	FINE CRIMP HEIGHT ADJUST	MECHANICAL
2151925-2	C	FINE CRIMP HEIGHT ADJUST	PNEUMATIC
5-2151925-1	C	SEAL STRIPPER CRIMPER TERMINATING UNIT	MECHANICAL
5-2151925-2	C	SEAL STRIPPER CRIMPER TERMINATING UNIT	PNEUMATIC
7-2151925-1	C	MECHANICAL AND CRIMP TOOLING KIT	MECHANICAL
7-2151925-2	C	PNEUMATIC AND CRIMP TOOLING KIT	PNEUMATIC
7-2151925-7	A	CRIMP TOOLING KIT	-

ATLANTIC VERSION TERMINATOR INTERFACE ADAPTER

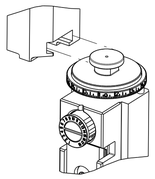

APPLICATOR DATA		
CRIMP	SIZE	TYPE
WIRE	1.40 mm [.055]	F
INSUL	1.40 mm [.055]	F
APPLICATOR INSTRUCTIONS 408-35042		

TERMINAL DATA: JST TERMINAL		JST CRIMP SPECIFICATION
TERMINAL NAME: TERMINAL		
WIRE STRIP LENGTH 2.36-3.17 mm [.093-.125 IN]	INSULATION DIAMETER RANGE ∅0.90-1.50 mm [.035-.059 IN]	
TERMINAL APPLICATION SPECIFICATION	JST SPEC	- -
	-	- -

TERMINALS APPLIED (5)

TE TERMINAL	JST TERMINAL	TE TERMINAL	JST TERMINAL
1832519-2	SPHD-002T-P0.5		

WIRE SIZE	CRIMP HEIGHT mm [INCH]	CRIMP HEIGHT REFERENCE SETTING (4)
24 AWG	0.645+/-0.025 [.025+/-.001]	8.9
26 AWG	0.625+/-0.025 [.025+/-.001]	9.2
28 AWG	0.575+/-0.025 [.023+/-.001]	9.7

(1) RECOMMENDED SPARE PARTS

(2) REFER TO SUPPLIED INSTRUCTION SHEET FOR CLEANING, LUBRICATION AND STORAGE OF APPLICATOR.

(3) APPLY PART NUMBER 2-23419-6 LOCTITE TO THREADS OF ITEM 242. PLY PART NUMBER 1-23419-5 LOCTITE TO THREADS OF ITEM 180.

(4) CRIMP HEIGHT REFERENCE SETTING WAS THE SETTING USED WHEN THE APPLICATOR WAS QUALIFIED AT THE FACTORY. ADJUSTMENT MAY BE NECESSARY WHEN RUNNING APPLICATOR IN THE FIELD.

(5) TERMINAL LUBRICANT IS RECOMMENDED.

6. UNLESS SPECIFIED OTHERWISE TORQUE VALUES SHALL BE USED PER DOCUMENT, 101-35000.

*WARNING
ON INSTALLATION, SET WIRE DISC TO CRIMP HEIGHT REFERENCE SETTING FOR LARGEST WIRE SIZE. CRIMP HEIGHT REFERENCE SETTINGS GREATER THAN THE VALUE SHOWN MAY CAUSE DAMAGE TO THE CRIMP TOOLING. REFER TO THE INSTRUCTION SHEET FOR PROPER SETUP AND ADJUSTMENTS.

-77	-72	-71	-52	-51	-2	-1	PART NO	DESCRIPTION	ITEM NO
-	-	-	1	1	-	-	1803515-3	RAM ASSEMBLY, SF ATLANTIC	293
-	-	-	1	1	-	-	2-1803583-1	APPLICATOR BASIC ASSEMBLY, SF	292
-	1	-	1	-	1	-	2119640-1	PUSH ROD, AIR FEED	250
-	1	-	1	-	1	-	1803259-1	BUSHING, FLANGED	249
-	1	-	1	-	1	-	2119641-1	FEED CAM, AIR FEED	248
-	1	1	1	1	1	1	2119082-4	CAM, SNAIL, INSULATION ADJUSTMENT	244
-	1	1	1	1	1	1	2079764-1	WASHER, WAVE SPRING, CREST-TO-CREST	243
(3) -	1	1	1	1	1	1	2119083-1	RETAINER, INSULATION DIAL	242
-	1	1	1	1	1	1	7-18023-7	SCR, SKT HD CAP M3 X 4.0	241
-	-	1	-	1	-	1	2119580-1	MECHANICAL FEED ASSEMBLY	239
-	1	-	1	-	1	-	2063440-1	AIR FEED MODULE	238
-	1	1	1	1	1	1	1-1901681-3	HOLDDOWN, TERMINAL	182
-	1	1	1	1	1	1	1-5018030-0	NUT, HEX, REG, RoHS, M3.5	181
(3) -	1	1	1	1	1	1	1-1752354-3	STANDOFF,HOLD-DOWN	180
-	1	1	1	1	1	1	993111-1	PIN, SLOTTED SPRING 3.0 X 20.0	177
-	1	1	1	1	1	1	5-22280-0	SPRING, COMPRESSION	176
-	1	1	1	1	1	1	1752353-3	GUIDE PIN,HOLDDOWN	175
-	1	1	1	1	1	1	1901680-2	GUIDE PIN,HOLDDOWN	174
-	2	-	2	-	2	-	21045-3	RING, RETAIN, EXTERN, 3/16 CRESCENT	172
-	REF	REF	REF	REF	REF	REF	994970-2	COUNTER, MAGNETIC	164
-	1	-	1	-	1	-	240638-1	SPRING, FEED FINGER	163
-	1	-	1	-	1	-	3-23627-7	PIN, RETAIN, GRVD, 3/16 X .854	137
-	1	-	1	-	1	-	2119799-1	HOLDER,FEED FINGER, AF	136
(5) -	1	1	1	1	1	1	2119955-1	ASSY, LUBRICATOR, SIDE FEED	113
-	1	1	1	1	1	1	2844908-1	SCREW, LOCKING	99
-	1	1	1	1	1	1	2844907-1	POST, LOCKING	98
-	1	1	1	1	1	1	1-455888-5	SPACER, CRIMPER	82
-	1	1	1	1	1	1	1803607-1	DOCUMENTATION PACKAGE	71
-	1	1	1	1	1	1	2119791-5	DEPRESSOR, WIRE	70
-	1	1	1	1	1	1	2119740-1	TAG,IDENTIFICATION	67
-	2	2	2	2	2	2	2168078-1	SCREW, DRIVE, RH, RoHS, 2 x .188	66
-	1	1	1	1	1	1	2168083-2	SCR, SKT HD CAP, RoHS, M4 X 8.0	60
-	1	1	1	1	1	1	5-18022-5	SCR, HEX HD CAP, M4 X 6.0	59
-	1	1	1	1	1	1	1338685-1	PAWL, FEED	56
-	4	4	4	4	4	4	2168083-3	SCR, SKT HD CAP, RoHS, M4 X 12.0	54
-	1	2	1	2	1	2	18023-9	SCR, SKT HD CAP M4 X 6.0	49
-	-	1	-	1	-	1	2119652-1	FEED CAM, PRE FEED	48
-	-	1	-	1	-	1	2119653-1	FEED CAM, POST FEED	47
-	1	1	-	-	1	1	1803583-9	APPLICATOR BASIC ASSEMBLY, SF	46
-	1	1	-	-	1	1	1803515-3	RAM ASSEMBLY, SF ATLANTIC	44
-	1	1	1	1	1	1	1803602-1	SCR, BHSC, RoHS (M8 X 25)	41
-	1	1	1	1	1	1	2-1752356-6	SUPPORT, TERMINAL	34
-	2	2	2	2	2	2	2079383-5	SCR, BHSC, RoHS (M4 X 20)	33
-	2	2	2	2	2	2	2-2844962-4	SPACER, CYLINDRICAL, STRIP GUIDE	30
-	1	1	1	1	1	1	2844992-1	ASSEMBLY, STRIP GUIDE	29
-	1	1	1	1	1	1	1320928-2	STRIP GUIDE	24
-	1	1	-	-	1	1	2168083-2	SCR, SKT HD CAP, RoHS, M4 X 8.0	21
-	2	2	1	1	2	2	1-18028-2	WASHER, FLAT, REG M4	20
-	1	1	-	-	1	1	2119533-1	STRIPPER, SIDE FEED	19
(1) -	1	1	1	1	1	1	2119806-1	INSERT, SHEAR	13
-	1	1	1	1	1	1	3-22280-3	SPRING, COMPRESSION	12
-	1	1	1	1	1	1	1-356885-4	STOP, SHEAR	11
(1) -	1	1	1	1	1	1	2119805-1	SHEAR HOLDER, FRONT	10
(1) -	1	1	1	1	1	1	1803095-6	FLOATING SHEAR, FRONT -	9
(1) 1	2	2	1	1	1	1	4-1633927-3	ANVIL, COMBINATION	8
-	-	-	-	-	-	-	-	-	7
-	-	-	-	-	-	-	-	-	6
-	1	1	1	1	1	1	2119757-4	DEPRESSOR, SHEAR	5
-	1	1	1	1	1	1	238011-5	BLOCK, CRIMPER SPACER	4
(1) 1	2	2	1	1	1	1	1803017-3	CRIMPER, INSULATION F	3
-	1	1	1	1	1	1	455888-1	SPACER, CRIMPER	2
(1) 1	2	2	1	1	1	1	3-456402-4	CRIMPER, WIRE PREMIUM	1

THIS DRAWING IS A CONTROLLED DOCUMENT FOR TYCO ELECTRONICS CORPORATION. IT IS SUBJECT TO CHANGE AND THE CONTROLLING ENGINEERING ORGANIZATION SHOULD BE CONTACTED FOR THE LATEST REVISION.

DWN	C CHEN	19APR2013
CHK	U GUO	19APR2013
APVD	L CRUZ	19APR2013
PRODUCT SPEC	-	
APPLICATION SPEC	-	
WEIGHT	-	

DIMENSIONS: mm

TOLERANCES UNLESS OTHERWISE SPECIFIED:
0 PLC ±-
1 PLC ±-
2 PLC ±-
3 PLC ±-
4 PLC ±-
ANGLES ±-

MATERIAL - -
FINISH - -

TE Connectivity
Harrisburg, PA 17105-3608

NAME: Ocean Side Feed Applicator -

SIZE	CAGE CODE	DRAWING NO	RESTRICTED TO
A1	00779	C-2151925	-

Customer Accessible Production Drawing | SCALE 1:2 | SHEET 1 OF 4 | REV C

ATLANTIC VERSION

Shown on sheets 1 of 4 & 2 of 4
(Pacific version shown on sheets 3 of 4 & 4 of 4)

SHEETS 3 & 4 ARE NOT REQUIRED FOR ATLANTIC VERSION

THIS DRAWING IS UNPUBLISHED. RELEASED FOR PUBLICATION 20
© COPYRIGHT 20 BY TYCO ELECTRONICS CORPORATION. ALL RIGHTS RESERVED.

LOC	DIST
A	66

REVISIONS

P	LTR	DESCRIPTION	DATE	DWN	APVD
	-	SEE SHEET 1	-	-	-

FEED TYPE MECHANICAL

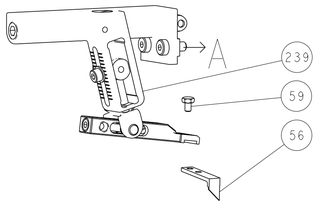

PNEUMATIC

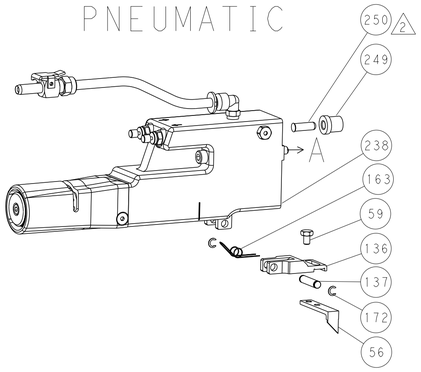

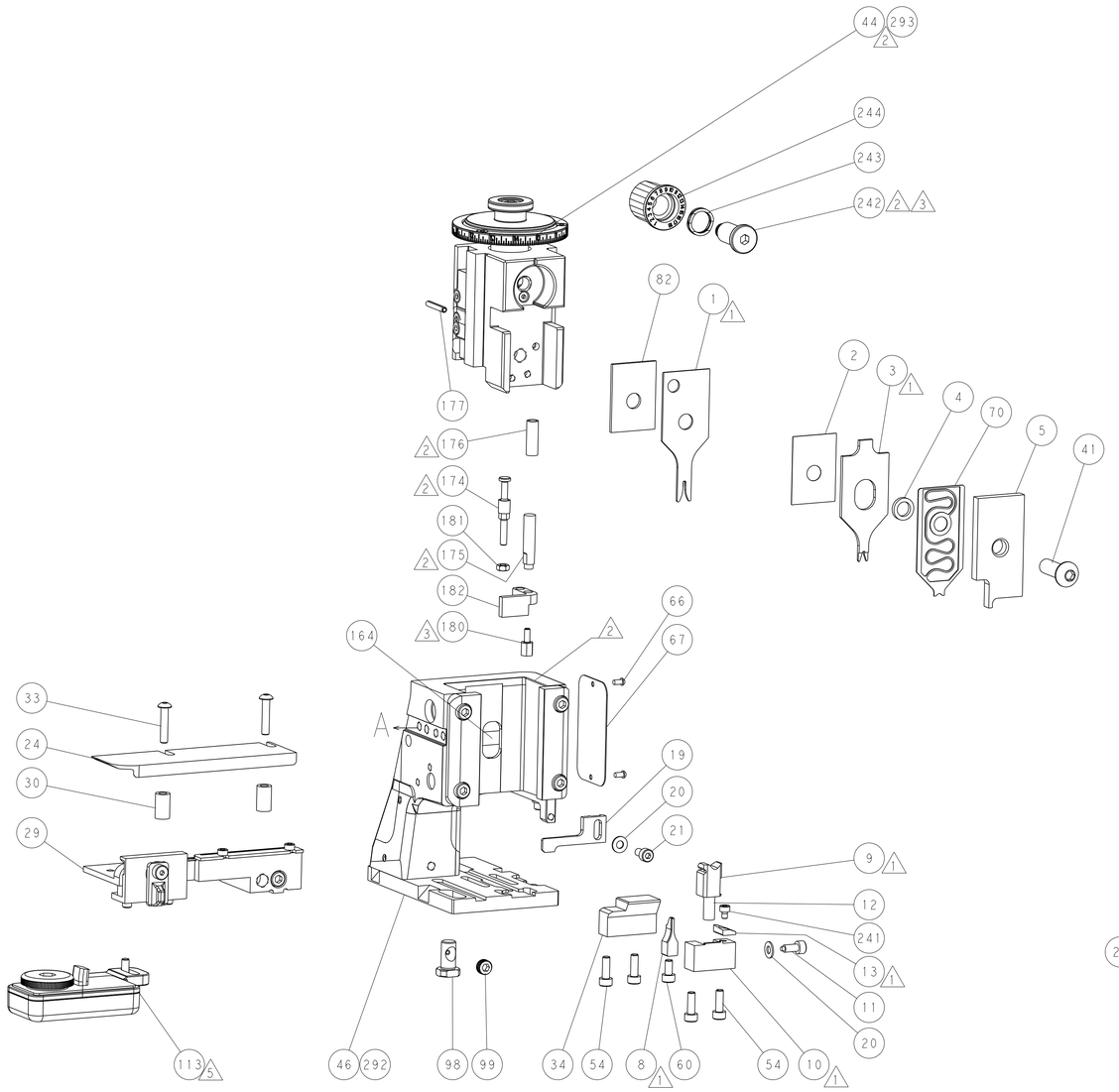

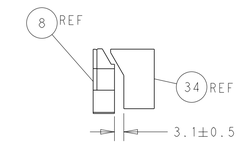

TERMINAL SUPPORT LOCATION

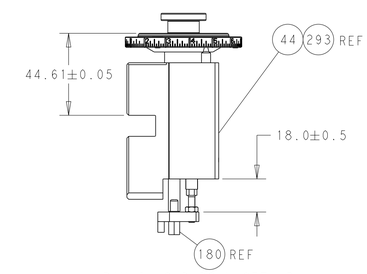

RAM & HOLD DOWN SET-UP

ITEM 30 LOCATED AT FRONT HOLES

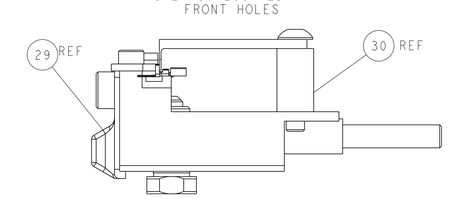

FEED TRACK POSITION
GUIDE BY INSULATION BARREL

CAM POSITIONS

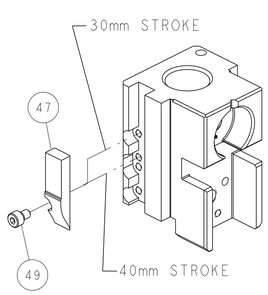

MECHANICAL
POST FEED

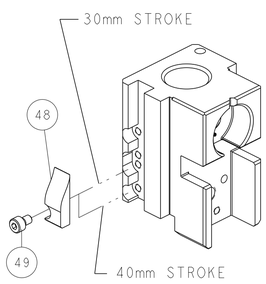

MECHANICAL
PRE FEED

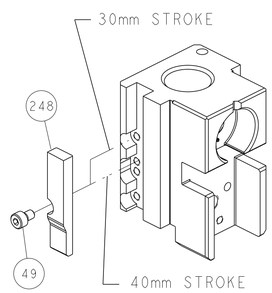

AIR FEED

ATLANTIC VERSION

Shown on sheets 1 of 4 & 2 of 4
(Pacific version shown on sheets 3 of 4 & 4 of 4)

THIS DRAWING IS A CONTROLLED DOCUMENT FOR TYCO ELECTRONICS CORPORATION. IT IS SUBJECT TO CHANGE AND THE CONTROLLING ENGINEERING ORGANIZATION SHOULD BE CONTACTED FOR THE LATEST REVISION.

DIMENSIONS: mm

TOLERANCES UNLESS OTHERWISE SPECIFIED:
0 PLC ±-
1 PLC ±-
2 PLC ±-
3 PLC ±-
4 PLC ±-
ANGLES ±-

MATERIAL - -
FINISH - -

DWN	C CHEN	19APR2013
CHK	U GUO	19APR2013
APVD	L CRUZ	19APR2013

PRODUCT SPEC -
APPLICATION SPEC -
WEIGHT -

TE Connectivity
Harrisburg, PA 17105-3608

NAME: Ocean Side Feed Applicator -

SIZE	CAGE CODE	DRAWING NO	RESTRICTED TO
A1	00779	C-2151925	-

Customer Accessible Production Drawing | SCALE 1:2 | SHEET 2 OF 4 | REV C

AMP 4805 REV 31MAR2000

SHEETS 3 & 4 ARE NOT REQUIRED FOR ATLANTIC VERSION

THIS DRAWING IS UNPUBLISHED. RELEASED FOR PUBLICATION 20
© COPYRIGHT 20 BY TYCO ELECTRONICS CORPORATION. ALL RIGHTS RESERVED.

LOC	DIST
A	66

REVISIONS

P	LTR	DESCRIPTION	DATE	DWN	APVD
	-	SEE SHEET 1	-	-	-

PART NUMBER	REVISION	DESCRIPTION	FEED TYPE
2-2151925-1	C	FINE CRIMP HEIGHT ADJUST	MECHANICAL
2-2151925-2	C	FINE CRIMP HEIGHT ADJUST	PNEUMATIC
7-2151925-7	A	CRIMP TOOLING KIT	-

PACIFIC VERSION TERMINATOR INTERFACE ADAPTER

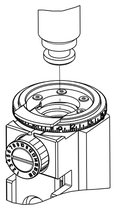

APPLICATOR DATA		
CRIMP	SIZE	TYPE
WIRE	1.40 mm [.055]	F
INSUL	1.40 mm [.055]	F
APPLICATOR INSTRUCTIONS 408-35042		

TERMINAL DATA: JST TERMINAL		JST CRIMP SPECIFICATION	
TERMINAL NAME: TERMINAL			
WIRE STRIP LENGTH 2.36-3.17 mm [.093-.125 IN]		INSULATION DIAMETER RANGE ∅0.90-1.50 mm [.035-.059 IN]	
TERMINAL APPLICATION SPECIFICATION	JST SPEC	-	-
	-	-	-
TERMINALS APPLIED 5			
TE TERMINAL	JST TERMINAL	TE TERMINAL	JST TERMINAL
1832519-2	SPHD-002T-P0.5		

WIRE SIZE	CRIMP HEIGHT mm [INCH]	CRIMP HEIGHT REFERENCE SETTING 4
24 AWG	0.645+/-0.025 [.025+/-.001]	8.9
26 AWG	0.625+/-0.025 [.025+/-.001]	9.2
28 AWG	0.575+/-0.025 [.023+/-.001]	9.7

1. RECOMMENDED SPARE PARTS
2. REFER TO SUPPLIED INSTRUCTION SHEET FOR CLEANING, LUBRICATION AND STORAGE OF APPLICATOR.
3. APPLY PART NUMBER 2-23419-6 LOCTITE TO THREADS OF ITEM 242. APPLY PART NUMBER 1-23419-5 LOCTITE TO THREADS OF ITEM 180.
4. CRIMP HEIGHT REFERENCE SETTING WAS THE SETTING USED WHEN THE APPLICATOR WAS QUALIFIED AT THE FACTORY. ADJUSTMENT MAY BE NECESSARY WHEN RUNNING APPLICATOR IN THE FIELD.
5. TERMINAL LUBRICANT IS RECOMMENDED.
6. UNLESS SPECIFIED OTHERWISE TORQUE VALUES SHALL BE USED PER DOCUMENT, 101-35000.

*WARNING
ON INSTALLATION, SET WIRE DISC TO CRIMP HEIGHT REFERENCE SETTING FOR LARGEST WIRE SIZE. CRIMP HEIGHT REFERENCE SETTINGS GREATER THAN THE VALUE SHOWN MAY CAUSE DAMAGE TO THE CRIMP TOOLING. REFER TO THE INSTRUCTION SHEET FOR PROPER SETUP AND ADJUSTMENTS.

	-77	-22	-21	PART NO	DESCRIPTION	ITEM NO
	-	1	-	2119640-1	PUSH ROD, AIR FEED	250
	-	1	-	1803259-1	BUSHING, FLANGED	249
	-	1	1	2119082-4	CAM, SNAIL, INSULATION ADJUSTMENT	244
	-	1	1	2079764-1	WASHER, WAVE SPRING, CREST-TO-CREST	243
3	-	1	1	2119083-1	RETAINER, INSULATION DIAL	242
	-	1	1	7-18023-7	SCR, SKT HD CAP M3 X 4.0	241
	-	-	1	2119580-1	MECHANICAL FEED ASSEMBLY	239
	-	1	-	2063440-1	AIR FEED MODULE	238
	-	1	1	1-1901681-3	HOLDDOWN, TERMINAL	182
	-	1	1	1-5018030-0	NUT, HEX, REG, RoHS, M3.5	181
3	-	1	1	1-1752354-3	STANDOFF,HOLD-DOWN	180
	-	1	1	993111-1	PIN, SLOTTED SPRING 3.0 X 20.0	177
	-	1	1	5-22280-0	SPRING, COMPRESSION	176
	-	1	1	1752353-3	GUIDE PIN,HOLDDOWN	175
	-	1	1	1901680-2	GUIDE PIN,HOLDDOWN	174
	-	2	-	21045-3	RING, RETAIN, EXTERN, 3/16 CRESCENT	172
	-	REF	REF	994970-2	COUNTER, MAGNETIC	164
	-	1	-	240638-1	SPRING, FEED FINGER	163
	-	1	-	2119641-2	FEED CAM, AIR FEED	151
	-	1	1	2168083-8	SCR, SKT HD CAP, RoHS, M4 X 16	144
	-	4	4	2168083-9	SCR, SKT HD CAP, RoHS, M4 X 20	143
	-	-	1	2119653-2	FEED CAM, POST FEED	142
	-	1	1	1-1803583-0	APPLICATOR BASIC ASSEMBLY, SF	141
	-	1	1	1803516-1	RAM ASSEMBLY, SF PACIFIC	140
	-	1	-	3-23627-7	PIN, RETAIN, GRVD, 3/16 X .854	137
	-	1	-	2119799-1	HOLDER,FEED FINGER, AF	136
5	-	1	1	2119955-1	ASSY, LUBRICATOR, SIDE FEED	113
	-	1	1	2844908-1	SCREW, LOCKING	99
	-	1	1	2844907-1	POST, LOCKING	98
	-	1	1	1-455888-5	SPACER, CRIMPER	82
	-	1	1	1803607-1	DOCUMENTATION PACKAGE	71
	-	1	1	2119791-5	DEPRESSOR, WIRE	70
	-	1	1	2119740-1	TAG,IDENTIFICATION	67
	-	2	2	2168078-1	SCREW, DRIVE, RH, RoHS, 2 x .188	66
	-	1	1	5-18022-5	SCR, HEX HD CAP, M4 X 6.0	59
	-	1	1	1338685-1	PAWL, FEED	56
	-	1	2	18023-9	SCR, SKT HD CAP M4 X 6.0	49
	-	-	1	2119652-1	FEED CAM, PRE FEED	48
	-	1	1	1803602-1	SCR, BHSC, RoHS (M8 X 25)	41
	-	1	1	2-1752356-6	SUPPORT, TERMINAL	34
	-	2	2	2079383-5	SCR, BHSC, RoHS (M4 X 20)	33
	-	2	2	2-2844962-4	SPACER, CYLINDRICAL, STRIP GUIDE	30
	-	1	1	2844992-1	ASSEMBLY, STRIP GUIDE	29
	-	1	1	1320928-2	STRIP GUIDE	24
	-	1	1	2168083-2	SCR, SKT HD CAP, RoHS, M4 X 8.0	21
	-	2	2	1-18028-2	WASHER, FLAT, REG M4	20
	-	1	1	2119533-1	STRIPPER, SIDE FEED	19
1	-	1	1	2119806-1	INSERT, SHEAR	13
	-	1	1	3-22280-3	SPRING, COMPRESSION	12
	-	1	1	1-356885-4	STOP, SHEAR	11
1	-	1	1	2119805-1	SHEAR HOLDER, FRONT	10
1	-	1	1	1803095-6	FLOATING SHEAR, FRONT -	9
1	1	1	1	4-1633927-3	ANVIL, COMBINATION	8
	-	-	-	-	-	7
	-	-	-	-	-	6
	-	1	1	2119757-4	DEPRESSOR, SHEAR	5
	-	1	1	238011-5	BLOCK, CRIMPER SPACER	4
1	1	1	1	1803017-3	CRIMPER, INSULATION F	3
	-	1	1	455888-1	SPACER, CRIMPER	2
1	1	1	1	3-456402-4	CRIMPER, WIRE PREMIUM	1

THIS DRAWING IS A CONTROLLED DOCUMENT FOR TYCO ELECTRONICS CORPORATION. IT IS SUBJECT TO CHANGE WITHOUT NOTICE. ALL PARTIES TO THIS ORGANIZATION SHOULD BE CONTACTED FOR THE LATEST REVISION.

DIMENSIONS: mm

TOLERANCES UNLESS OTHERWISE SPECIFIED:
0 PLC ±-
1 PLC ±-
2 PLC ±-
3 PLC ±-
4 PLC ±-
ANGLES ±-

MATERIAL - -
FINISH - -

DWN C.CHEN 19APR2013
CHK U.GUO 19APR2013
APVD I.CRUZ 19APR2013
PRODUCT SPEC -
APPLICATION SPEC -
WEIGHT -

TE Connectivity
Harrisburg, PA 17105-3608

NAME Ocean Side Feed Applicator -

SIZE	CAGE CODE	DRAWING NO	RESTRICTED TO
A1	00779	C-2151925	-

Customer Accessible Production Drawing | SCALE 1:2 | SHEET 3 OF 4 | REV C

PACIFIC VERSION

Shown on sheets 3 of 4 & 4 of 4
(Atlantic version shown on sheets 1 of 4 & 2 of 4)

SHEETS 1 & 2 ARE NOT REQUIRED FOR PACIFIC VERSION

THIS DRAWING IS UNPUBLISHED. RELEASED FOR PUBLICATION 20
© COPYRIGHT 20 BY TYCO ELECTRONICS CORPORATION. ALL RIGHTS RESERVED.

LOC	DIST
A	66

REVISIONS

P	LTR	DESCRIPTION	DATE	DWN	APVD
	-	SEE SHEET 1	-	-	-

FEED TYPE

MECHANICAL

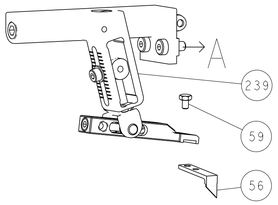

PNEUMATIC

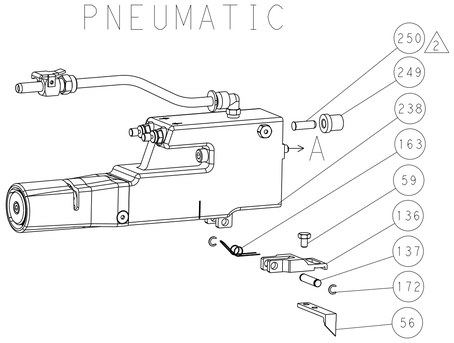

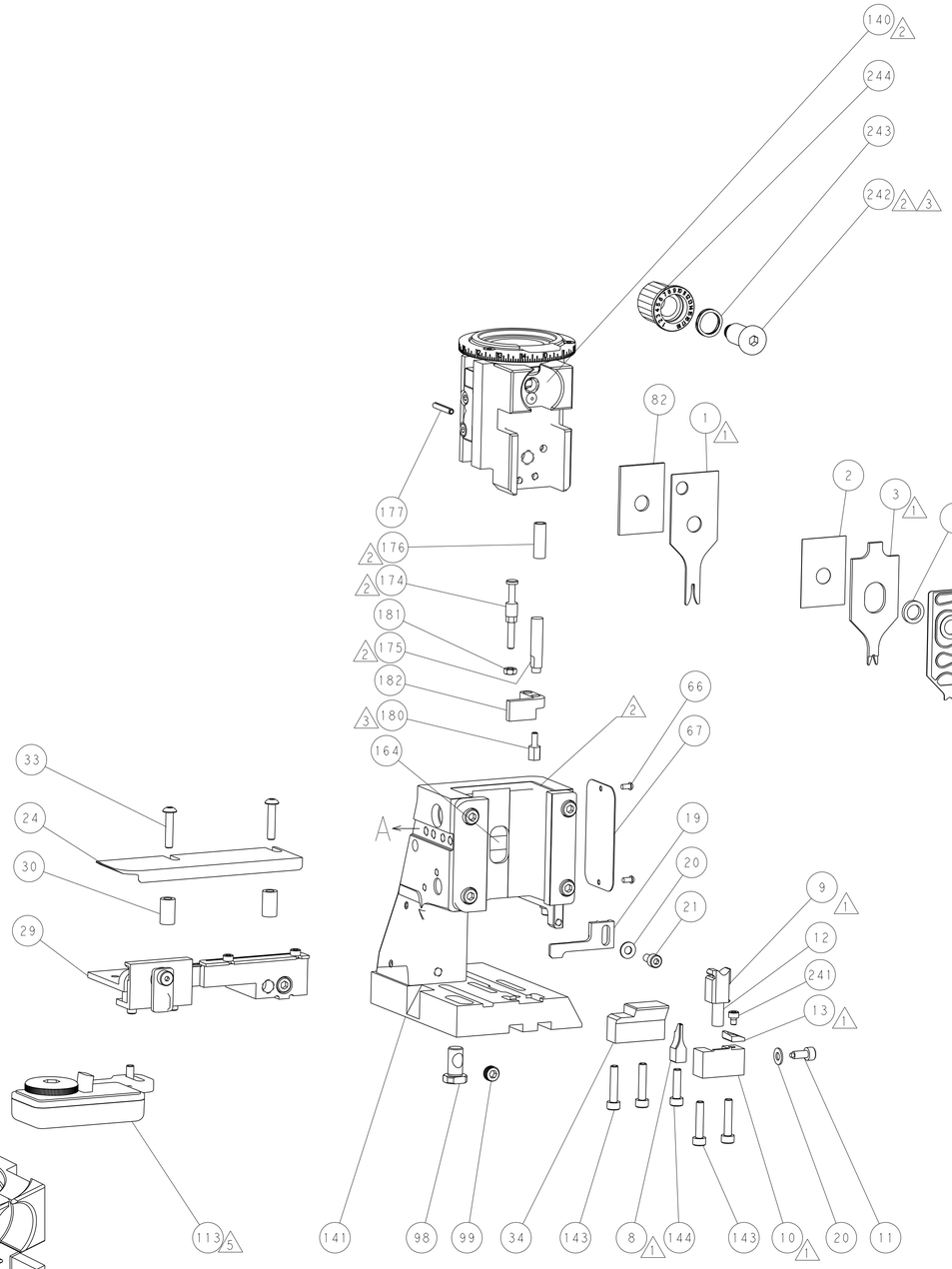

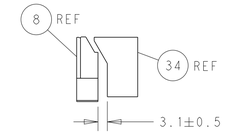

TERMINAL SUPPORT LOCATION

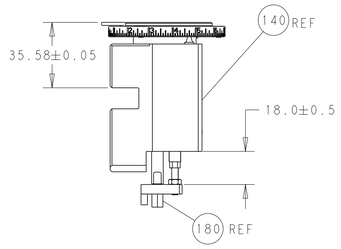

RAM & HOLD DOWN SET-UP

ITEM 30 LOCATED AT FRONT HOLES

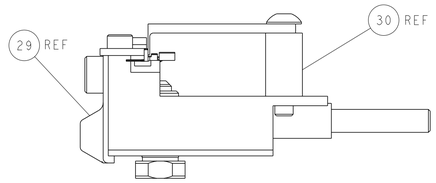

FEED TRACK POSITION
GUIDE BY INSULATION BARREL

CAM POSITIONS

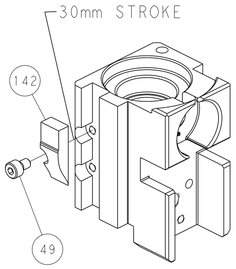

MECHANICAL
POST FEED

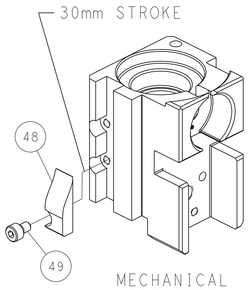

MECHANICAL
PRE FEED

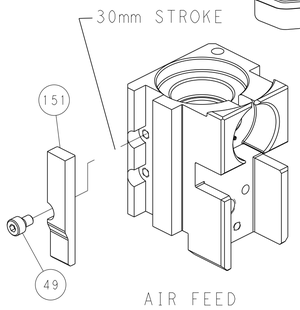

AIR FEED

PACIFIC VERSION

Shown on sheets 3 of 4 & 4 of 4
(Atlantic version shown on sheets 1 of 4 & 2 of 4)

THIS DRAWING IS A CONTROLLED DOCUMENT FOR TYCO ELECTRONICS CORPORATION. IT IS SUBJECT TO CHANGE AND THE CONTROLLING ENGINEERING ORGANIZATION SHOULD BE CONTACTED FOR THE LATEST REVISION.

DWN	C. CHEN	19APR2013
CHK	U. GUO	19APR2013
APVD	L. CRUZ	19APR2013
PRODUCT SPEC	-	
APPLICATION SPEC	-	
WEIGHT	-	

DIMENSIONS: mm

TOLERANCES UNLESS OTHERWISE SPECIFIED:
0 PLC ±-
1 PLC ±-
2 PLC ±-
3 PLC ±-
4 PLC ±-
ANGLES ±-

MATERIAL - -
FINISH - -

TE Connectivity
Harrisburg, PA 17105-3608

NAME: Ocean Side Feed Applicator -

SIZE	CAGE CODE	DRAWING NO	RESTRICTED TO
A1	00779	C-2151925	-

Customer Accessible Production Drawing | SCALE 1:2 | SHEET 4 OF 4 | REV C

AMP 4805 REV 31MAR2000

SHEETS 1 & 2 ARE NOT REQUIRED FOR PACIFIC VERSION