THIS DRAWING IS A CONTROLLED DOCUMENT.

LOC	DIST
A1	-

REVISIONS

P	LTR	DESCRIPTION	DATE	DWN	APVD
	BA	NEW DRAWING	19JAN2012	DMS	ST.P

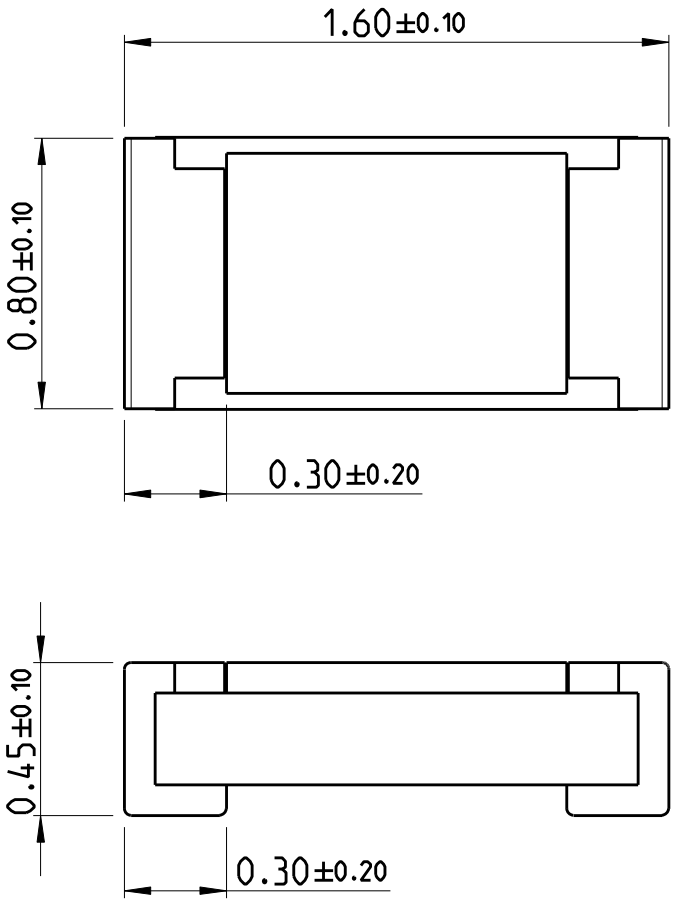

FOR FURTHER INFORMATION SEE DATA SHEET FOR
CURRENT SENSING CHIP RESISTOR - RL73 SERIES

RoHS Compliant

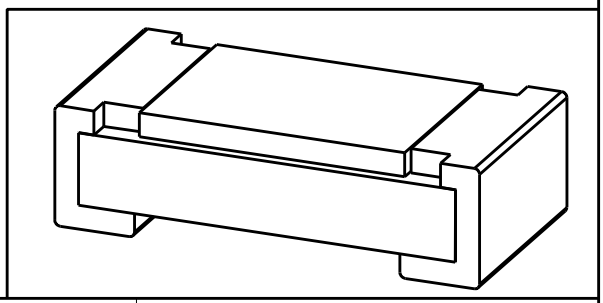

THIS DRAWING IS UNPUBLISHED. © COPYRIGHT 2011 - ALL RIGHTS RESERVED. RELEASED FOR PUBLICATION 2011

DIMENSIONS: mm

TOLERANCES UNLESS OTHERWISE SPECIFIED:

0 PLC ±-
1 PLC ±-
2 PLC ±-
3 PLC ±-
4 PLC ±-
ANGLES ±5°

DWN	DARSHAN MS	19JAN2012
CHK	ALLAN P	19JAN2012
APVD	STEPHEN.P	19JAN2012

PRODUCT SPEC: -

APPLICATION SPEC: -

WEIGHT: 0.00199 Gram

MATERIAL: - FINISH: -

TE Connectivity

NAME: SMD Low Ohmic Current Sense Resistor

SIZE	CAGE CODE	DRAWING NO	RESTRICTED TO
A4	00779	C-2176052	-

CUSTOMER DRAWING

SCALE 45:1 SHEET 1 OF 1 REV BA