Impact™ Backplane Connector System

RoHS Ready

TE connectivity

Table of Contents

Introduction 3-7

Daughter Card Receptacle Assemblies
6 Pair Daughter Card Receptacle Assemblies 8
5 Pair Daughter Card Receptacle Assemblies 9
4 Pair Daughter Card Receptacle Assemblies 10
3 Pair Daughter Card Receptacle Assemblies 11
2 Pair Daughter Card Receptacle Assemblies 12

Mezzanine Assemblies
5 Pair Mezzanine Assemblies 13

Backplane Header Assemblies
6 Pair Backplane Header Assemblies 14
5 Pair Backplane Header Assemblies 15
4 Pair Backplane Header Assemblies 16
3 Pair Backplane Header Assemblies 17
2 Pair Backplane Header Assemblies 18

Coplanar Header (RAM) Assemblies
2 Pair Coplanar Header (RAM) Assemblies 19

Orthogonal Receptacle Assemblies
6 Pair Orthogonal Receptacle Assemblies 20
5 Pair Orthogonal Receptacle Assemblies 21
4 Pair Orthogonal Receptacle Assemblies 22
3 Pair Orthogonal Receptacle Assemblies 23

Orthogonal Header Assemblies
6 Pair Orthogonal Header Assemblies 24
5 Pair Orthogonal Header Assemblies 25
4 Pair Orthogonal Header Assemblies 26
3 Pair Orthogonal Header Assemblies 27

Part Number Index 28

Global Contacts 31

Disclaimer

While TE has made every reasonable effort to ensure the accuracy of the information in this catalog, TE does not guarantee that it is error-free, nor does TE make any other representation, warranty or guarantee that the informa-tion is accurate, correct, reliable or current. TE reserves the right to make any adjustments to the information contained herein at any time without notice. TE expressly disclaims all implied warranties regarding the information contained herein, including, but not limited to, any implied warranties of merchantability or fitness for a particular purpose. The dimensions in this catalog are for reference purposes only and are subject to change without notice. Specifications are subject to change without notice. Consult TE for the latest dimensions and design specifications.

© Copyright 2011 Tyco Electronics Corporation. All Rights Reserved.

MULTIGIG RT, Z-PACK, Z-PACK HM-Zd, Z-PACK HS3, Z-PACK Slim UHD, Z-PACK TinMan, TE Connectivity, TE connectivity (logo) and TE (logo) are trademarks of the TE Connectivity Ltd family of companies.

Impact is a trademark of Molex, Inc.

Other logos, product and Company names mentioned herein may be trademarks of their respective owners.

Visit the Impact connector webpage at: www.te.com/products/impact

Catalog 7-1773458-1
Revised 8-19

www.te.com

Dimensions are shown for reference purposes only. Specifications subject to change.

Dimensions are in millimeters unless otherwise specified.

USA: +1 (800) 522-6752
Canada: +1 (905) 475-6222
Mexico/C. Am.: +52 (0) 55-1106-0800
Latin/S. Am.: +54 (0) 11-4733-2200
Germany: +49 (0) 6251-133-1999
UK: +44 (0) 800-267666
France: +33 (0) 1-3420-8686
Netherlands: +31 (0) 73-6246-999
China: +86 (0) 400-820-6015

Introduction

Product Facts

- **Differential pair density up to 80 pairs per linear inch**
- **Broad-edge-coupled, differential-pair system**
- **PCB routing complexity and costs are reduced by using 1.90 mm by 1.35 mm (.075" by .053") grid on backplane and daughter card**
- **Offers flexibility and advanced mechanical and electrical performance with two compliant-pin attach options**
- **Inline staggered, bifurcated contact beams in daughter card interface provides improved mating performance**

Industry Applications

- **Telecommunications equipment**
  - **Hubs, routers, switches**
- **Central office, cellular infrastructure and multi-platform service (DSL, Cable Data) systems**
- **Data networking equipment**
  - **Servers**
  - **Storage**
- **Test and measurement equipment**
- **Medical diagnostic equipment**

Technical Documents

Product Specification
108-2351

Application Specification
114-13258

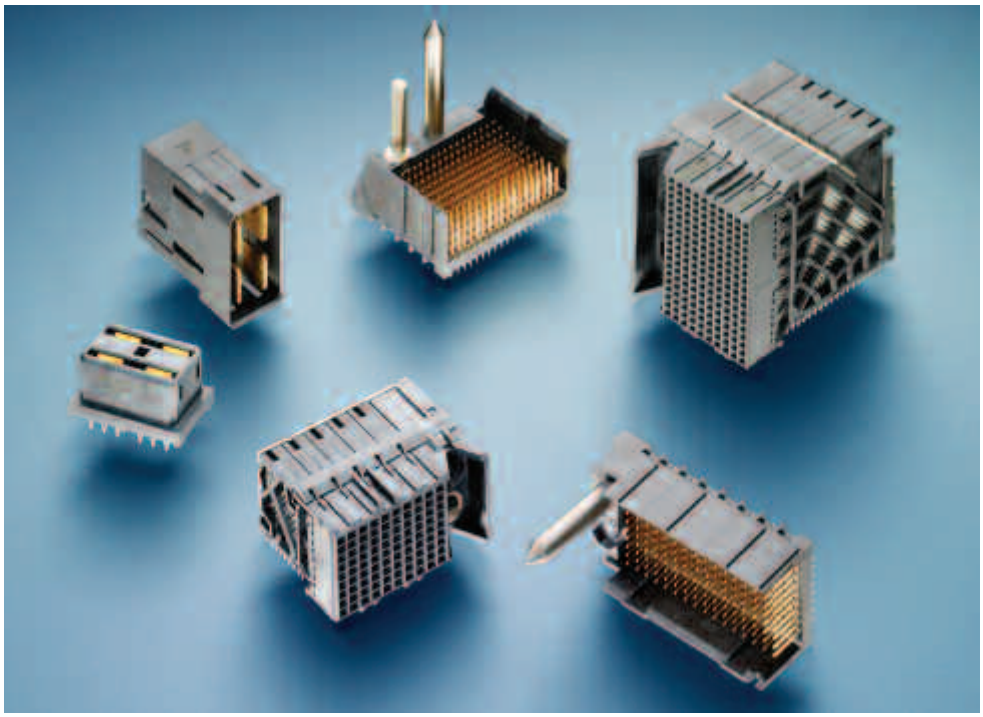

TE Connectivity offers a variety of backplane/ midplane solutions to meet the demand for increased network bandwidth and advanced technology. Each solution is designed for high performance, increased density and compatibility with industry-standard interfaces.
TE provides a user-friendly transition between the PCB-mounted connector and the backplane/ midplane.
TE has extensive knowledge and expertise on high-speed interface design. Your specific needs can be customized and transformed into new manufacturable designs.

The Impact backplane connector and cable system from TE pushes the speed and density envelope to meet the growing demands of next-generation telecommunication and data networking equipment; the system is available in 2-6 pair configurations with a complete range of guidance and power-solution options plus right-angle cable assemblies.

The Impact system is available in two compliant-pin design options on both daughter card and backplane connectors, providing customers ultimate flexibility to optimize their designs for advanced mechanical and electrical performance. The Impact system's mating interface provides in-line staggered, bifurcated contacts that provide 2 points of contact for the long-term reliability performance and built-in, ground-signal sequencing. This reduces the average mating force per connector to improve the mechanical mating performance of the system.

Material and Finish

Signal Contact — High Performance Copper (Cu) Alloy

Ground Contact — High Performance Copper (Cu) Alloy

Housing — Liquid Crystal Polymer, UL 94V-0

Platings

Contact Area — 0.76 µm (30 µ") Gold (Au) min.

Solder Tail Area — Tin (Sn) or Tin/Lead (Sn/Pb)

Underplating — Nickel (Ni)

PCB Thickness — 1.60 mm (.062") typical

Ratings

Temperature Range — -55˚C to 85˚C max.

Current Rating — 0.75 A per pin max.

Durability — 200 cycles

Operating Voltage — 30 VAC RMS/ DC max.

Mating Force — 0.30 N (9.066 lb) max. per pin

Compliant Pin Retention Force to PCB — 3.56 N (.80 lb) per compliant pin average min.

Compliant Pin Insertion Force to PCB — 26.7 N (6.0 lb) max. per contact

Signal Integrity

Insulation Resistance — 10,000 Megohms min.

Visit the Impact connector webpage at: www.te.com/products/impact

Catalog 7-1773458-1
Revised 8-19

www.te.com

Dimensions are shown for reference purposes only. Specifications subject to change.

Dimensions are in millimeters unless otherwise specified.

USA: +1 (800) 522-6752
Canada: +1 (905) 475-6222
Mexico/C. Am.: +52 (0) 55-1106-0800
Latin/S. Am.: +54 (0) 11-4733-2200
Germany: +49 (0) 6251-133-1999
UK: +44 (0) 800-267666
France: +33 (0) 1-3420-8686
Netherlands: +31 (0) 73-6246-999
China: +86 (0) 400-820-6015

Introduction (Continued)

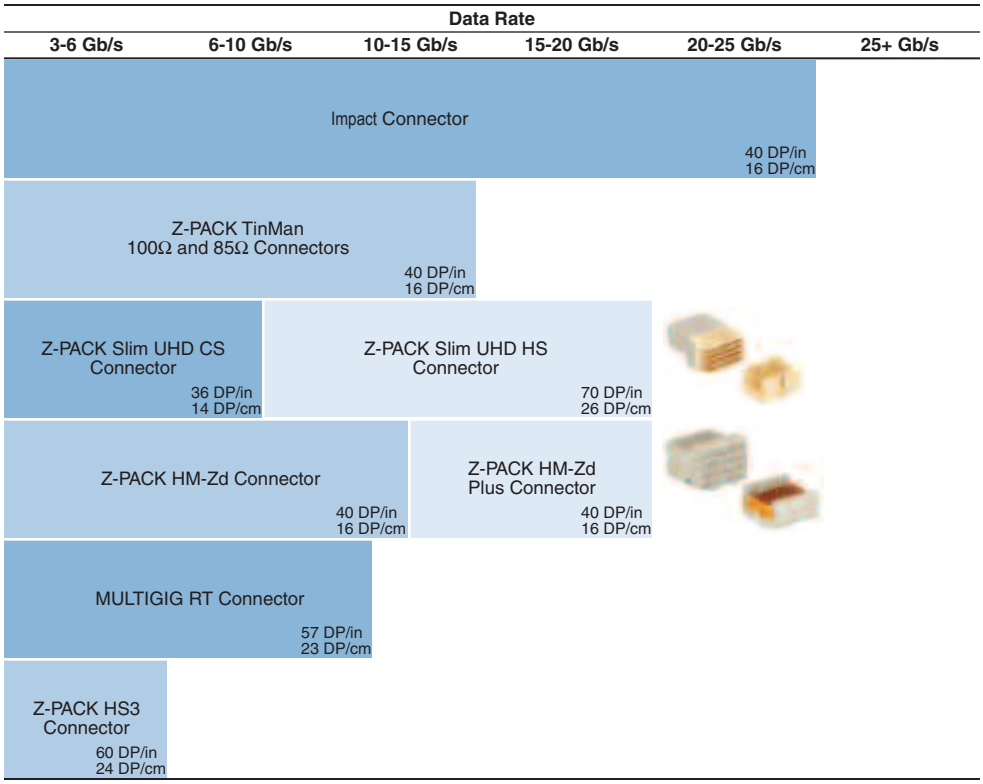

	Header Width (W)	Pairs/Inch
2 Pair Impact Connector	12.65 mm	27
3 Pair Impact Connector	16.70 mm	40
4 Pair Impact Connector	20.75 mm	54
5 Pair Impact Connector	24.8 mm	67
6 Pair Impact Connector	28.85 mm	80

	Receptacles	Headers
2 Pair	2057405-1	2057428-1
3 Pair	2007705-1	2007786-1
4 Pair	2007717-1	2007818-1
5 Pair	2110106-1	2007850-1
6 Pair	2007741-1	2007882-1

All the numbers provided are for 0.39mm PCB plated thru hole use. Part numbers are available for 0.46mm PCB plated thru holes by contacting the respective country product information center listed on the bottom of each page.

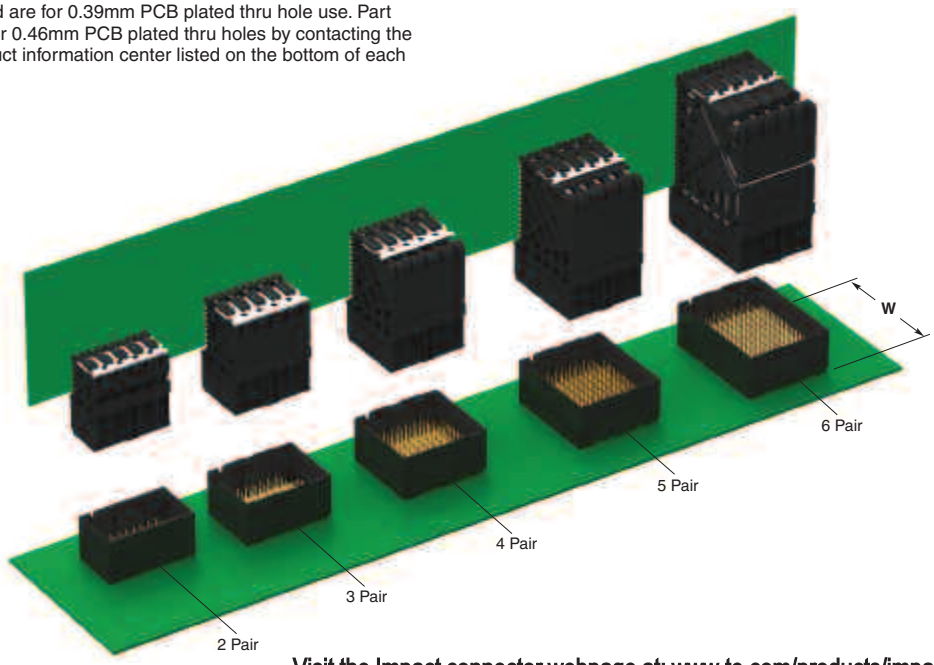

Visit the Impact connector webpage at: www.te.com/products/impact

Catalog 7-1773458-1
Revised 8-19

www.te.com

Dimensions are shown for reference purposes only. Specifications subject to change.

Dimensions are in millimeters unless otherwise specified.

USA: +1 (800) 522-6752

Canada: +1 (905) 475-6222
Mexico/C. Am.: +52 (0) 55-1106-0800
Latin/S. Am.: +54 (0) 11-4733-2200
Germany: +49 (0) 6251-133-1999

UK: +44 (0) 800-267666
France: +33 (0) 1-3420-8686
Netherlands: +31 (0) 73-6246-999
China: +86 (0) 400-820-6015

Introduction (Continued)

Impact Connector Family

Standard, Monoblock Solutions

2 Pair Impact (W = 12.65 mm)
Density = 27 Pairs/Inch
10 column = 20 Diff. Pairs
16 column = 32 Diff. Pairs

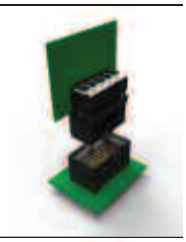

3 Pair Impact (W = 16.7 mm)
Density = 40 Pairs/Inch
10 column = 30 Diff. Pairs
16 column = 48 Diff. Pairs

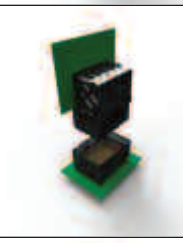

4 Pair Impact (W = 20.75 mm)
Density = 54 Pairs/Inch
10 column = 40 Diff. Pairs
16 column = 64 Diff. Pairs

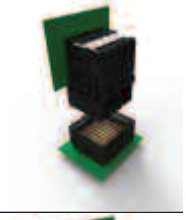

5 Pair Impact (W = 24.80 mm)
Density = 67 Pairs/Inch
10 column = 50 Diff. Pairs
16 column = 80 Diff. Pairs

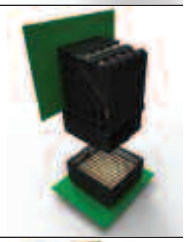

6 Pair Impact (W = 28.85 mm)
Density = 80 Pairs/Inch
10 column = 60 Diff. Pairs
16 column = 96 Diff. Pairs

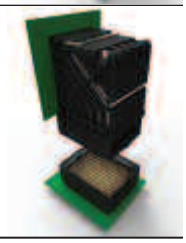

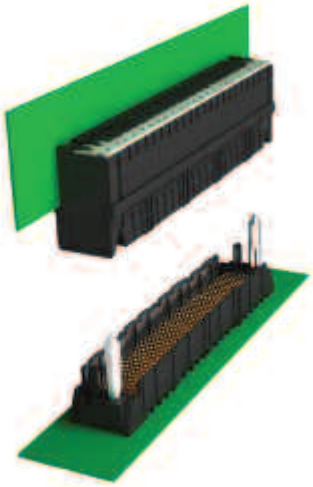

End-to-End Stackable Example

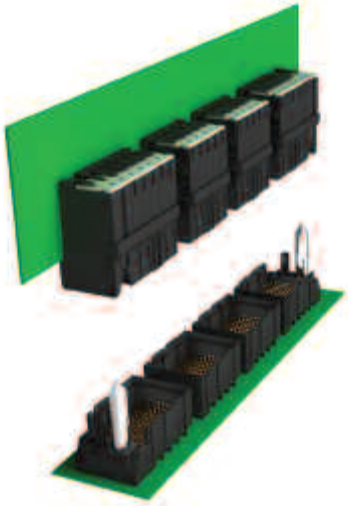

End Wall Separation Example

Visit the Impact connector webpage at: www.te.com/products/impact

Catalog 7-1773458-1
Revised 8-19

www.te.com

Dimensions are shown for reference purposes only. Specifications subject to change.

Dimensions are in millimeters unless otherwise specified.

USA: +1 (800) 522-6752
Canada: +1 (905) 475-6222
Mexico/C. Am.: +52 (0) 55-1106-0800
Latin/S. Am.: +54 (0) 11-4733-2200
Germany: +49 (0) 6251-133-1999
UK: +44 (0) 800-267666
France: +33 (0) 1-3420-8686
Netherlands: +31 (0) 73-6246-999
China: +86 (0) 400-820-6015

Introduction (Continued)

Worst Case Crosstalk

All NEXT	2.7%
All FeXT	0.7%
Recommended Pinout (as shown below)	1.5%

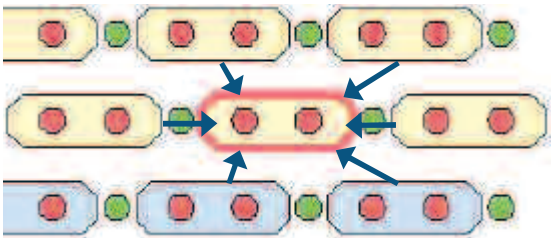

Test Data

- Vertical Header — Right-Angle Receptacle
  - 4 pair connector module
  - 1.9 mm column pitch
  - 0.0146" plated through holes
- 50 ps (20-80%) edge rate
- Includes two 1.5 mm [0.060] vias to bottom layer traces
- Asynchronous noise sum of peaks from each aggressor, divided by differential swing (A-B)

Differential Insertion Loss

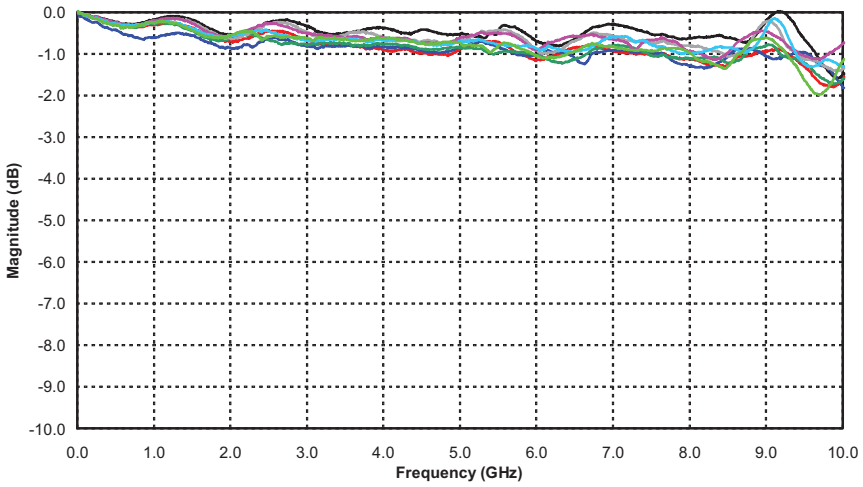

Differential Impedance

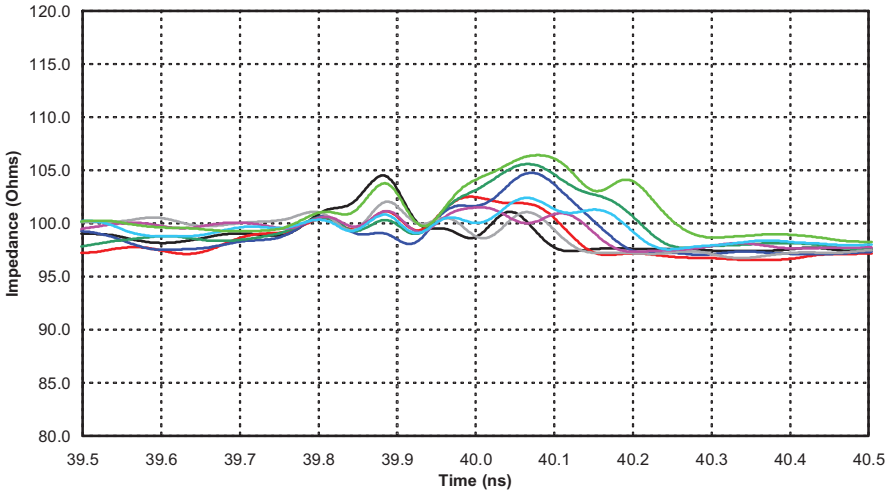

Visit the Impact connector webpage at: www.te.com/products/impact

Catalog 7-1773458-1
Revised 8-19

www.te.com

Dimensions are shown for reference purposes only. Specifications subject to change.

Dimensions are in millimeters unless otherwise specified.

USA: +1 (800) 522-6752

Canada: +1 (905) 475-6222
Mexico/C. Am.: +52 (0) 55-1106-0800
Latin/S. Am.: +54 (0) 11-4733-2200
Germany: +49 (0) 6251-133-1999

UK: +44 (0) 800-267666
France: +33 (0) 1-3420-8686
Netherlands: +31 (0) 73-6246-999
China: +86 (0) 400-820-6015

Introduction (Continued)

Impact High Performance Cable Assembly Planned:

- 3 x 16 wafer stack —96 diff. pair total
- Impact wafer to wafer pitch — 3.8 mm
- Assumes 3 m length — 26 AWG raw cable
- Integral guidance
- Robust, stamped, metal wafer stack stiffener

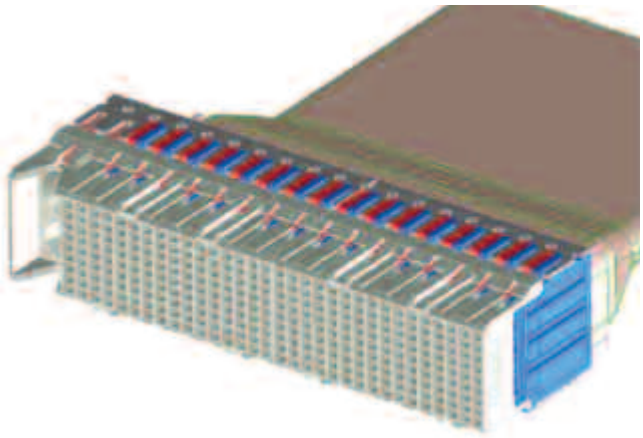

100 Ohm

Pair Size	Columns	Pins	Pairs
2 Pair	10	60	20
	16	96	32
3 Pair	8	72	24
	10	90	30
	16	144	48
4 Pair	8	96	32
	10	120	40
	16	192	64
5 Pair	10	150	50
	12	180	60
	16	240	80
6 Pair	10	180	60
	14	252	84
	16	288	96

85 Ohm

Pair Size	Columns	Pins	Pairs
5 Pair	10	150	50
	16	240	80

Visit the Impact connector webpage at: www.te.com/products/impact

Catalog 7-1773458-1
Revised 8-19

www.te.com

Dimensions are shown for reference purposes only. Specifications subject to change.

Dimensions are in millimeters unless otherwise specified.

USA: +1 (800) 522-6752
Canada: +1 (905) 475-6222
Mexico/C. Am.: +52 (0) 55-1106-0800
Latin/S. Am.: +54 (0) 11-4733-2200
Germany: +49 (0) 6251-133-1999
UK: +44 (0) 800-267666
France: +33 (0) 1-3420-8686
Netherlands: +31 (0) 73-6246-999
China: +86 (0) 400-820-6015

Daughter Card Receptacle Assemblies

6 Pair Daughter Card Receptacle Assemblies

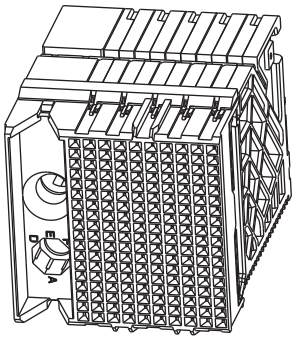

Column	Guide	Part Number	Dimension A	Dimension B	Dimension C	Application Tooling	Mates With
10	Left	2007739-1	26.6	37.3	17.1	2018534-1	2007873-1
	Right	2007740-1	26.6	37.3	17.1	2018534-1	2007877-1
	Unguided	2007741-1	19	37.3	17.1	2018534-1	2007886-1
16	Left	2007745-1	38	37.3	28.5	2018535-1	2007889-1
	Right	2007746-1	38	37.3	28.5	2018535-1	2007893-1
	Unguided	2007747-1	30.4	37.3	28.5	2018535-1	2007902-1

Note: 10 column part number 2007739-1 is pictured below.

All the numbers provided are for 0.39mm PCB plated thru hole use. Part numbers are available for 0.46mm PCB plated thru holes by contacting the respective country product information center listed on the bottom of each page.

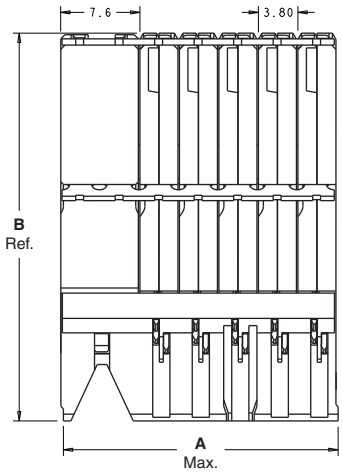

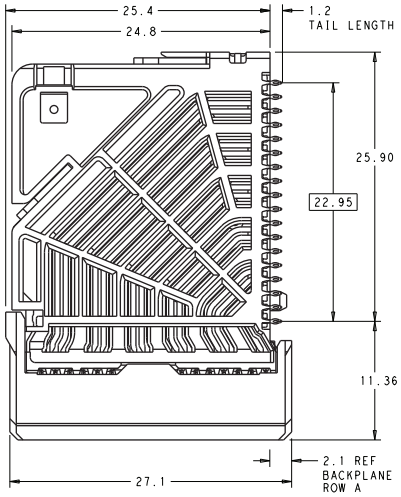

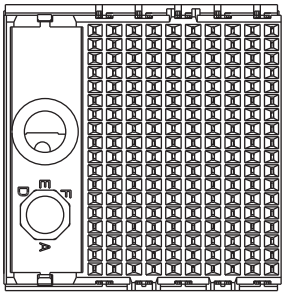

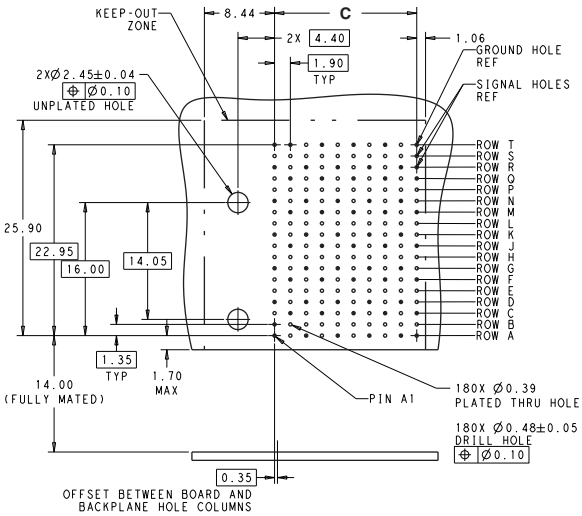

Recommended PCB Layout
Min. Board Thickness 1.0

Key Position Chart	
None	
A	E
B	F
C	G
D	H

Visit the Impact connector webpage at: www.te.com/products/impact

Catalog 7-1773458-1
Revised 8-19

www.te.com

Dimensions are shown for reference purposes only. Specifications subject to change.

Dimensions are in millimeters unless otherwise specified.

USA: +1 (800) 522-6752
Canada: +1 (905) 475-6222
Mexico/C. Am.: +52 (0) 55-1106-0800
Latin/S. Am.: +54 (0) 11-4733-2200
Germany: +49 (0) 6251-133-1999
UK: +44 (0) 800-267666
France: +33 (0) 1-3420-8686
Netherlands: +31 (0) 73-6246-999
China: +86 (0) 400-820-6015

Daughter Card Receptacle Assemblies (Continued)

5 Pair Daughter Card Receptacle Assemblies

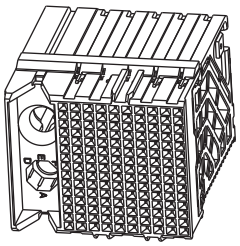

Column	Guide	Part Number	Dimension A	Dimension B	Dimension C	Application Tooling	Mates With
10	Left	2110104-1	26.6	32.3	17.1	2018448-1	2007841-1
	Right	2110105-1	26.6	32.3	17.1	2018448-1	2007845-1
	Unguided	2110106-1	19.0	32.3	17.1	2018448-1	2007854-1
16	Left	2110122-1	38.0	32.3	28.5	2018532-1	2007857-1
	Right	2110123-1	38.0	32.3	28.5	2018532-1	2007861-1
	Unguided	2110124-1	30.4	32.3	28.5	2018532-1	2007870-1

Note: 10 column part number 2110104-1 is pictured below.

All the numbers provided are for 0.39mm PCB plated thru hole use. Part numbers are available for 0.46mm PCB plated thru holes by contacting the respective country product information center listed on the bottom of each page.

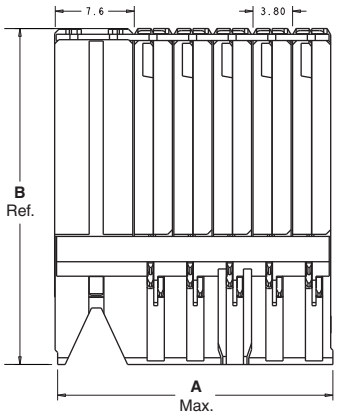

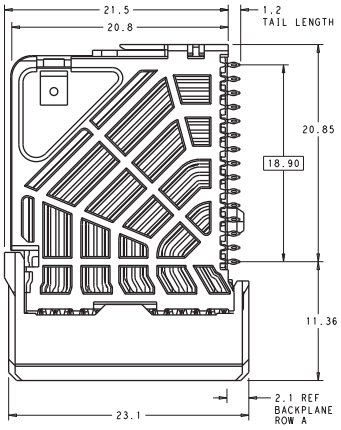

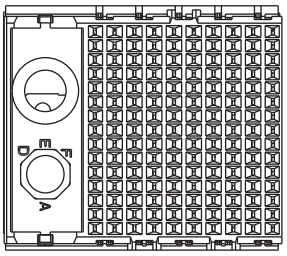

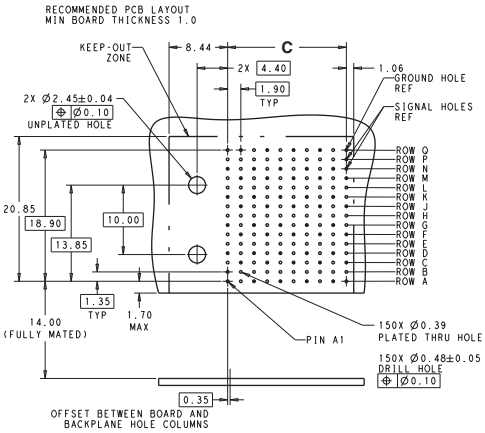

Recommended PCB Layout
Min. Board Thickness 1.0

Key Position Chart	
None	
A	E
B	F
C	G
D	H

Visit the Impact connector webpage at: www.te.com/products/impact

Catalog 7-1773458-1
Revised 8-19

www.te.com

Dimensions are shown for reference purposes only. Specifications subject to change.

Dimensions are in millimeters unless otherwise specified.

USA: +1 (800) 522-6752

Canada: +1 (905) 475-6222
Mexico/C. Am.: +52 (0) 55-1106-0800
Latin/S. Am.: +54 (0) 11-4733-2200
Germany: +49 (0) 6251-133-1999

UK: +44 (0) 800-267666
France: +33 (0) 1-3420-8686
Netherlands: +31 (0) 73-6246-999
China: +86 (0) 400-820-6015

Daughter Card Receptacle Assemblies (Continued)

4 Pair Daughter Card Receptacle Assemblies

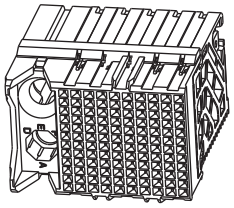

Column	Guide	Part Number	Dimension A	Dimension B	Dimension C	Application Tooling	Mates With
10	Left	2007715-1	26.6	28.2	17.1	2018530-1	2007809-1
	Right	2007716-1	26.6	28.2	17.1	2018530-1	2007813-1
	Unguided	2007717-1	19	28.2	17.1	2018530-1	2007822-1
16	Left	2007721-1	38	28.2	28.5	2018531-1	2007825-1
	Right	2007722-1	38	28.2	28.5	2018531-1	2007829-1
	Unguided	2007723-1	30.4	28.2	28.5	2018531-1	2007838-1

Note: 10 column part number 2007715-1 is pictured below.

All the numbers provided are for 0.39mm PCB plated thru hole use. Part numbers are available for 0.46mm PCB plated thru holes by contacting the respective country product information center listed on the bottom of each page.

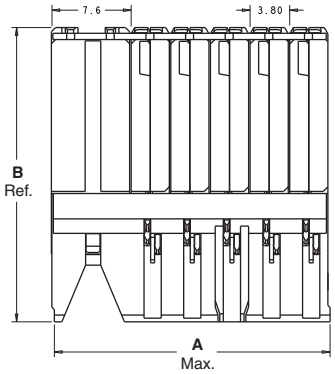

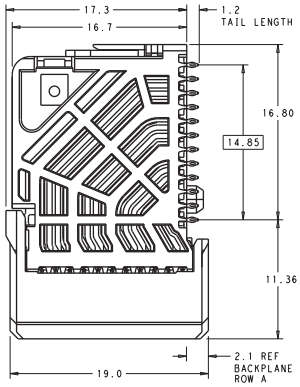

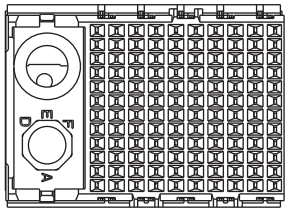

Key Position Chart	
None	
A	E
B	F
C	G
D	H

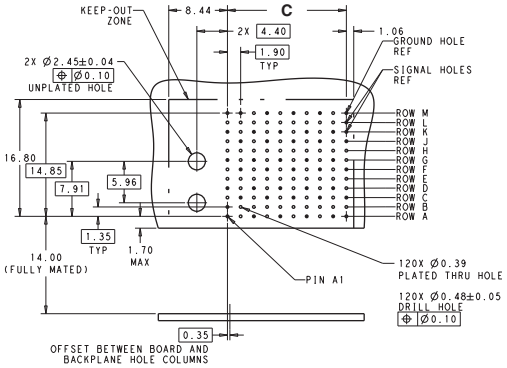

Recommended PCB Layout
Min. Board Thickness 1.0

Visit the Impact connector webpage at: www.te.com/products/impact

Catalog 7-1773458-1
Revised 8-19

www.te.com

Dimensions are shown for reference purposes only. Specifications subject to change.

Dimensions are in millimeters unless otherwise specified.

USA: +1 (800) 522-6752
Canada: +1 (905) 475-6222
Mexico/C. Am.: +52 (0) 55-1106-0800
Latin/S. Am.: +54 (0) 11-4733-2200
Germany: +49 (0) 6251-133-1999
UK: +44 (0) 800-267666
France: +33 (0) 1-3420-8686
Netherlands: +31 (0) 73-6246-999
China: +86 (0) 400-820-6015

Daughter Card Receptacle Assemblies (Continued)

3 Pair Daughter Card Receptacle Assemblies

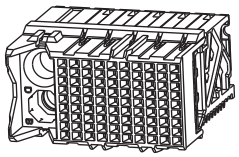

Column	Guide	Part Number	Dimension A	Dimension B	Dimension C	Application Tooling	Mates With
10	Left	2007703-1	26.6	24.2	17.1	2018380-1	2007777-1
	Right	2007704-1	26.6	24.2	17.1	2018380-1	2007781-1
	Unguided	2007705-1	19	24.2	17.1	2018380-1	2007789-1
16	Left	2007709-1	38	24.2	28.5	2018381-1	2007793-1
	Right	2007710-1	38	24.2	28.5	2018381-1	2007797-1
	Unguided	2007711-1	30.4	24.2	28.5	2018381-1	2007805-1

Note: 10 column part number 2007703-1 is pictured below.

All the numbers provided are for 0.39mm PCB plated thru hole use. Part numbers are available for 0.46mm PCB plated thru holes by contacting the respective country product information center listed on the bottom of each page.

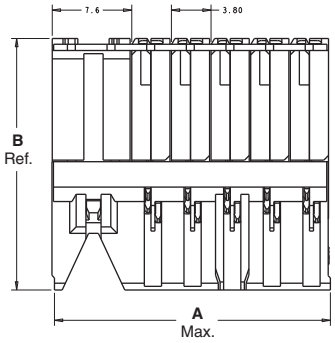

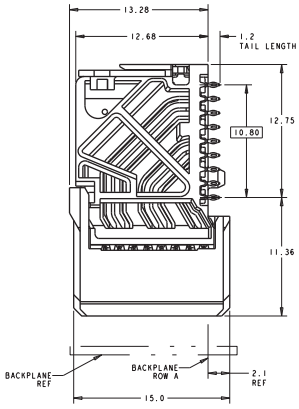

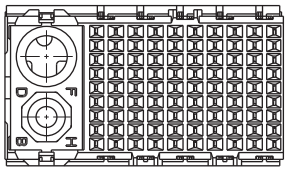

Key Position Chart	
None	
A	E
B	F
C	G
D	H

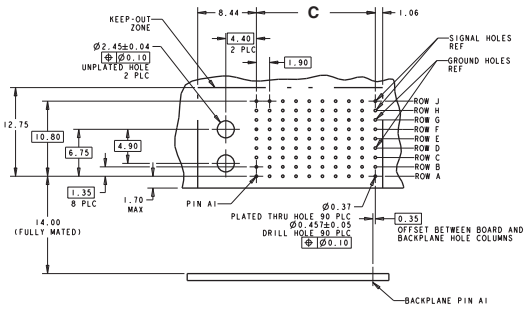

Recommended PCB Layout
Min. Board Thickness 1.0

Visit the Impact connector webpage at: www.te.com/products/impact

Catalog 7-1773458-1
Revised 8-19

www.te.com

Dimensions are shown for reference purposes only. Specifications subject to change.

Dimensions are in millimeters unless otherwise specified.

USA: +1 (800) 522-6752

Canada: +1 (905) 475-6222
Mexico/C. Am.: +52 (0) 55-1106-0800
Latin/S. Am.: +54 (0) 11-4733-2200
Germany: +49 (0) 6251-133-1999

UK: +44 (0) 800-267666
France: +33 (0) 1-3420-8686
Netherlands: +31 (0) 73-6246-999
China: +86 (0) 400-820-6015

Daughter Card Receptacle Assemblies (Continued)

2 Pair Daughter Card Receptacle Assemblies

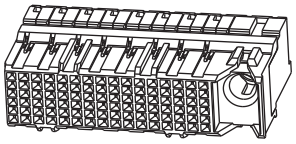

Column	Guide	Part Number	Dimension A	Dimension B	Dimension C	Application Tooling	Mates With
10	Left	2057403-1	26.6	20.1	17.1	2018538-1	2057419-1
	Right	2057404-1	26.6	20.1	17.1	2018538-1	2057423-1
	Unguided	2057405-1	19	20.1	17.1	2018538-1	2057432-1
16	Left	2057409-1	38	20.1	28.5	2018539-1	2057737-1
	Right	2057410-1	38	20.1	28.5	2018539-1	2057741-1
	Unguided	2057411-1	30.4	20.1	28.5	2018539-1	2057750-1

Note: 16 column part number 2057410-1 is pictured below.

All the numbers provided are for 0.39mm PCB plated thru hole use. Part numbers are available for 0.46mm PCB plated thru holes by contacting the respective country product information center listed on the bottom of each page.

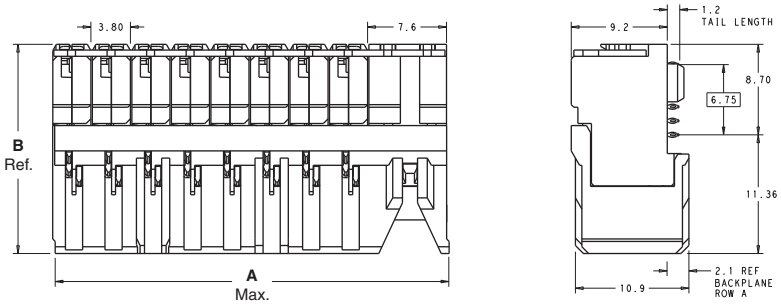

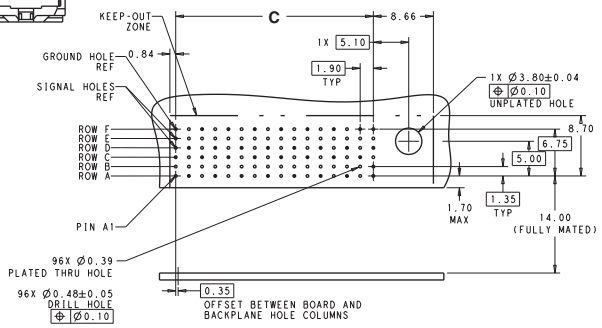

Recommended PCB Layout
Min. Board Thickness 1.6

Visit the Impact connector webpage at: www.te.com/products/impact

Catalog 7-1773458-1
Revised 8-19

www.te.com

Dimensions are shown for reference purposes only. Specifications subject to change.

Dimensions are in millimeters unless otherwise specified.

USA: +1 (800) 522-6752

Canada: +1 (905) 475-6222
Mexico/C. Am.: +52 (0) 55-1106-0800
Latin/S. Am.: +54 (0) 11-4733-2200
Germany: +49 (0) 6251-133-1999

UK: +44 (0) 800-267666
France: +33 (0) 1-3420-8686
Netherlands: +31 (0) 73-6246-999
China: +86 (0) 400-820-6015

Mezzanine Assemblies

5 Pair Mezzanine Receptacle Assemblies

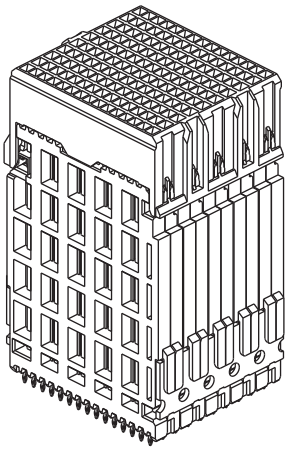

Column	Stack Height	Guide	Part Number	Dimension A	Dimension B	Dimension C	Application Tooling	Mates With
10	40 mm	Left	2149911-1	26.6	24.2	17.1	2018774-1	2007840-1
		Right	2149912-1	26.6	24.2	17.1	2018774-1	2007844-1
		Unguided	2149913-1	19.0	24.2	17.1	2018774-1	2007850-1
16	28 mm	Left	2149392-1	26.6	24.2	28.5	2018774-2	2007856-1
		Right	2149393-1	26.6	24.2	28.5	2018774-2	2007860-1
		Unguided	2149394-1	19.0	24.2	28.5	2018774-2	2007866-1

Note: 10 column part number 2149913-1 is pictured below.

All the numbers provided are for 0.39mm PCB plated thru hole use. Part numbers are available for 0.46mm PCB plated thru holes by contacting the respective country product information center listed on the bottom of each page.

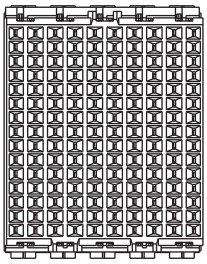

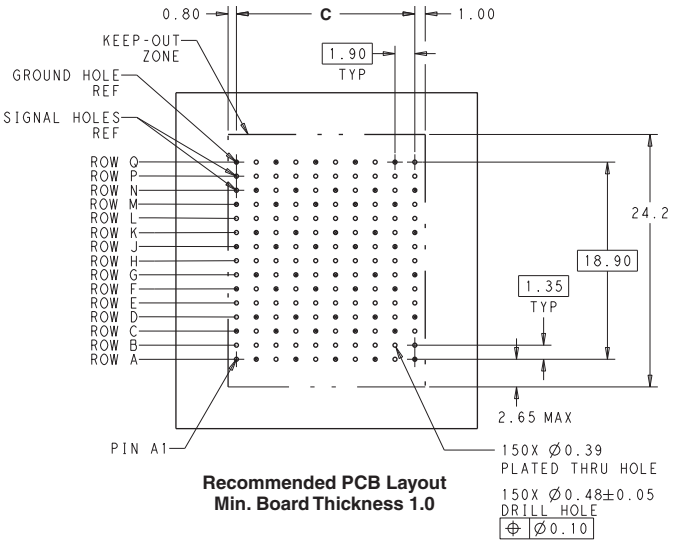

Recommended PCB Layout
Min. Board Thickness 1.0

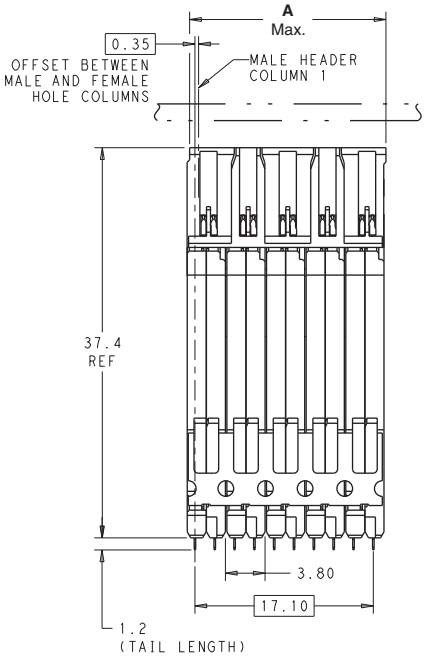

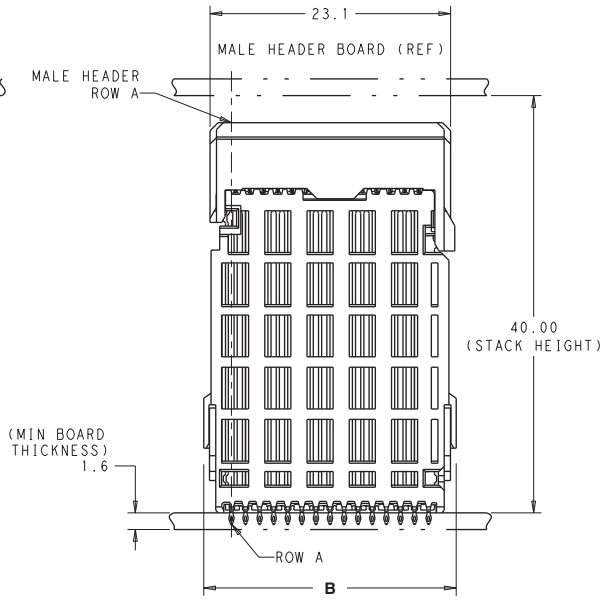

Visit the Impact connector webpage at: www.te.com/products/impact

Catalog 7-1773458-1
Revised 8-19

www.te.com

Dimensions are shown for reference purposes only. Specifications subject to change.

Dimensions are in millimeters unless otherwise specified.

USA: +1 (800) 522-6752

Canada: +1 (905) 475-6222
Mexico/C. Am.: +52 (0) 55-1106-0800
Latin/S. Am.: +54 (0) 11-4733-2200
Germany: +49 (0) 6251-133-1999

UK: +44 (0) 800-267666
France: +33 (0) 1-3420-8686
Netherlands: +31 (0) 73-6246-999
China: +86 (0) 400-820-6015

Backplane Header Assemblies

6 Pair Backplane Header Assemblies

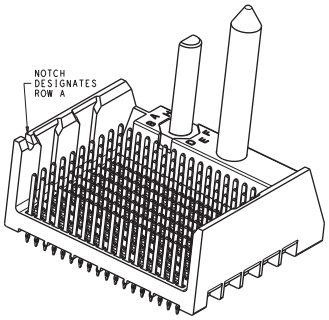

Column	Guide	Wall End	Part Number	Dimension A	Dimension B	Dimension C	Application Tooling	Mates With
10	Left	Right	2007875-1	26.9	28.9	17.1	2018527-1	2007739-1
		Open	2007873-1	25.5	28.9	17.1	2018527-1	2007739-1
	Right	Left	2007879-1	26.9	28.9	17.1	2018527-1	2007740-1
		Open	2007877-1	25.5	28.9	17.1	2018527-1	2007740-1
	Unguided	Left	2007885-1	20.3	28.9	17.1	2018527-1	2007741-1
		Right	2007887-1	20.3	28.9	17.1	2018527-1	2007741-1
		Dual	2007886-1	21.7	28.9	17.1	2018527-1	2007741-1
		Open	2007884-1	18.9	28.9	17.1	2018527-1	2007741-1
16	Left	Right	2007891-1	38.3	28.9	28.5	2018528-1	2007745-1
		Open	2007889-1	36.9	28.9	28.5	2018528-1	2007745-1
	Right	Left	2007895-1	38.3	28.9	28.5	2018528-1	2007746-1
		Open	2007893-1	36.9	28.9	28.5	2018528-1	2007746-1
	Unguided	Left	2007901-1	31.7	28.9	28.5	2018528-1	2007747-1
		Right	2007903-1	31.7	28.9	28.5	2018528-1	2007747-1
		Dual	2007902-1	33.1	28.9	28.5	2018528-1	2007747-1
		Open	2007900-1	30.3	28.9	28.5	2018528-1	2007747-1

Note: 10 column part number 2007877-1 is pictured below.

All the numbers provided are for 0.39mm PCB plated thru hole use. Part numbers are available for 0.46mm PCB plated thru holes by contacting the respective country product information center listed on the bottom of each page.

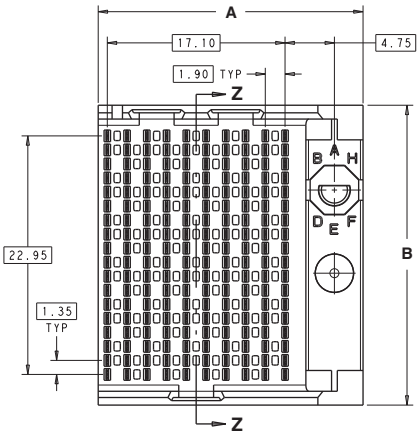

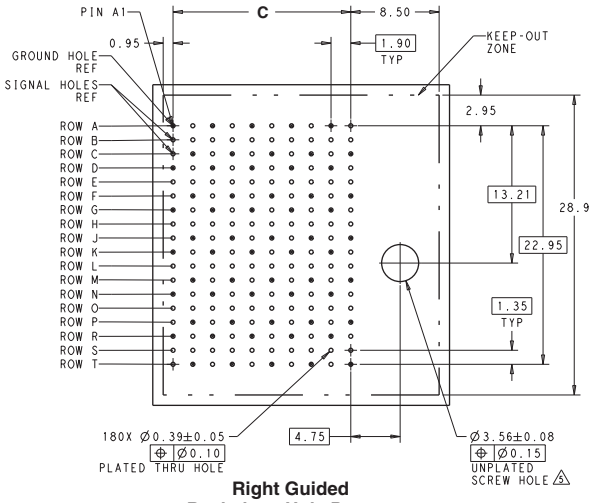

Right Guided Backplane Hole Pattern (Connector Side)

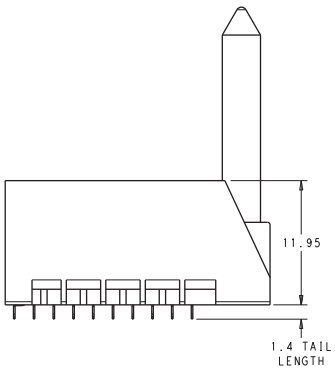

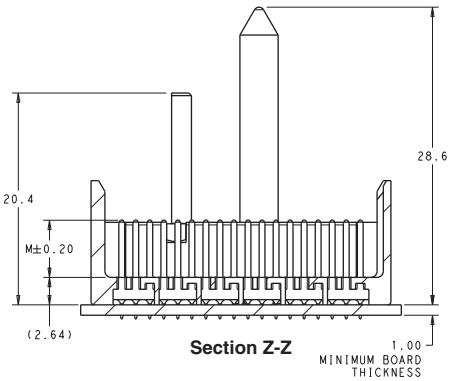

Section Z-Z

Visit the Impact connector webpage at: www.te.com/products/impact

Catalog 7-1773458-1
Revised 8-19

www.te.com

Dimensions are shown for reference purposes only. Specifications subject to change.

Dimensions are in millimeters unless otherwise specified.

USA: +1 (800) 522-6752

Canada: +1 (905) 475-6222
Mexico/C. Am.: +52 (0) 55-1106-0800
Latin/S. Am.: +54 (0) 11-4733-2200
Germany: +49 (0) 6251-133-1999

UK: +44 (0) 800-267666
France: +33 (0) 1-3420-8686
Netherlands: +31 (0) 73-6246-999
China: +86 (0) 400-820-6015

Backplane Header Assemblies (Continued)

5 Pair Backplane Header Assemblies

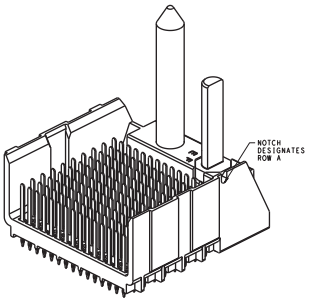

Column	Guide	Wall End	Part Number	Dimension A	Dimension B	Dimension C	Application Tooling	Mates With
10	Left	Right	2007843-1	26.9	24.8	17.1	2018446-1	2110104-1
		Open	2007841-1	25.5	24.8	17.1	2018446-1	2110104-1
	Right	Left	2007847-1	26.9	24.8	17.1	2018446-1	2110105-1
		Open	2007845-1	25.5	24.8	17.1	2018446-1	2110105-1
	Unguided	Left	2007853-1	20.3	24.8	17.1	2018446-1	2110106-1
		Right	2007855-1	20.3	24.8	17.1	2018446-1	2110106-1
		Dual	2007854-1	21.7	24.8	17.1	2018446-1	2110106-1
		Open	2007852-1	18.9	24.8	17.1	2018446-1	2110106-1
16	Left	Right	2007853-1	38.3	24.8	28.5	2018525-1	2110122-1
		Open	2007857-1	36.9	24.8	28.5	2018525-1	2110122-1
	Right	Left	2007863-1	38.3	24.8	28.5	2018525-1	2110123-1
		Open	2007861-1	36.9	24.8	28.5	2018525-1	2110123-1
	Unguided	Left	2007869-1	31.7	24.8	28.5	2018525-1	2110124-1
		Right	2007871-1	31.7	24.8	28.5	2018525-1	2110124-1
		Dual	2007870-1	33.1	24.8	28.5	2018525-1	2110124-1
		Open	2007868-1	30.3	24.8	28.5	2018525-1	2110124-1

Note: 10 column part number 2007841-1 is pictured below.

All the numbers provided are for 0.39mm PCB plated thru hole use. Part numbers are available for 0.46mm PCB plated thru holes by contacting the respective country product information center listed on the bottom of each page.

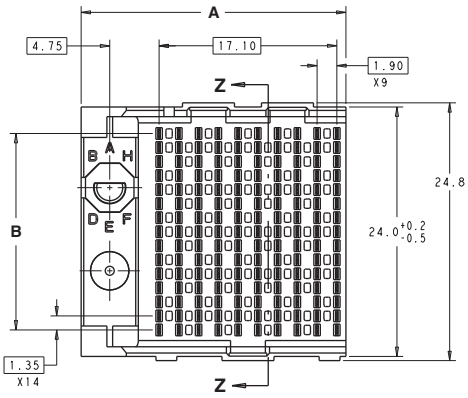

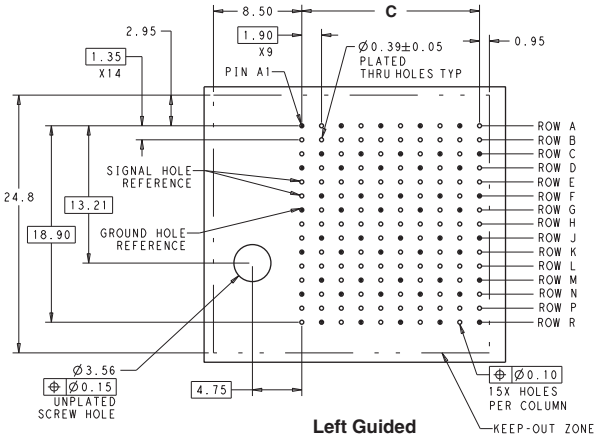

Left Guided Backplane Hole Pattern (Connector Side)

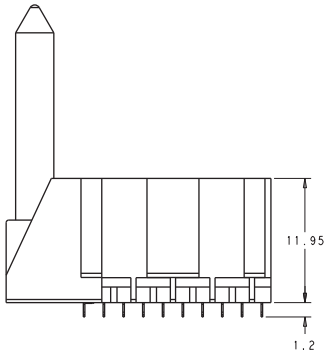

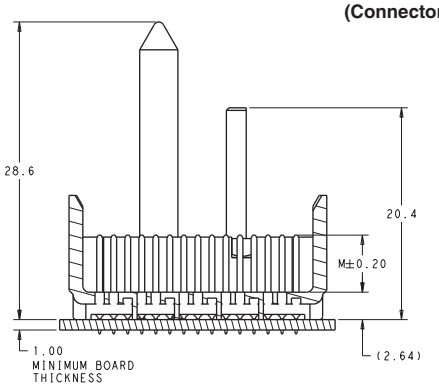

Section Z-Z

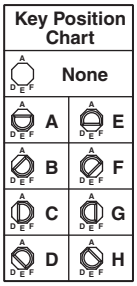

Visit the Impact connector webpage at: www.te.com/products/impact

Dimensions are shown for reference purposes only. Specifications subject to change.

Dimensions are in millimeters unless otherwise specified.

USA: +1 (800) 522-6752

Canada: +1 (905) 475-6222
Mexico/C. Am.: +52 (0) 55-1106-0800
Latin/S. Am.: +54 (0) 11-4733-2200
Germany: +49 (0) 6251-133-1999

UK: +44 (0) 800-267666
France: +33 (0) 1-3420-8686
Netherlands: +31 (0) 73-6246-999
China: +86 (0) 400-820-6015

Backplane Header Assemblies (Continued)

4 Pair Backplane Header Assemblies

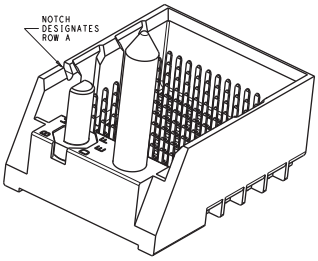

Column	Guide	Wall End	Part Number	Dimension A	Dimension B	Dimension C	Application Tooling	Mates With
10	Left	Right	2007811-1	26.9	20.8	17.1	2018524-1	2007715-1
		Open	2007809-1	25.5	20.8	17.1	2018524-1	2007715-1
	Right	Left	2007815-1	26.9	20.8	17.1	2018524-1	2007716-1
		Open	2007813-1	25.5	20.8	17.1	2018524-1	2007716-1
	Unguided	Left	2007821-1	20.3	20.8	17.1	2018524-1	2007717-1
		Right	2007823-1	20.3	20.8	17.1	2018524-1	2007717-1
		Dual	2007822-1	21.7	20.8	17.1	2018524-1	2007717-1
		Open	2007820-1	18.9	20.8	17.1	2018524-1	2007717-1
16	Left	Right	2007827-1	38.3	20.8	28.5	2018513-1	2007721-1
		Open	2007825-1	36.9	20.8	28.5	2018513-1	2007721-1
	Right	Left	2007831-1	38.3	20.8	28.5	2018513-1	2007722-1
		Open	2007829-1	36.9	20.8	28.5	2018513-1	2007722-1
	Unguided	Left	2007837-1	31.7	20.8	28.5	2018513-1	2007723-1
		Right	2007839-1	31.7	20.8	28.5	2018513-1	2007723-1
		Dual	2007838-1	33.1	20.8	28.5	2018513-1	2007723-1
		Open	2007836-1	30.3	20.8	28.5	2018513-1	2007723-1

Note: 10 column part number 2007811-1 is pictured below.

All the numbers provided are for 0.39mm PCB plated thru hole use. Part numbers are available for 0.46mm PCB plated thru holes by contacting the respective country product information center listed on the bottom of each page.

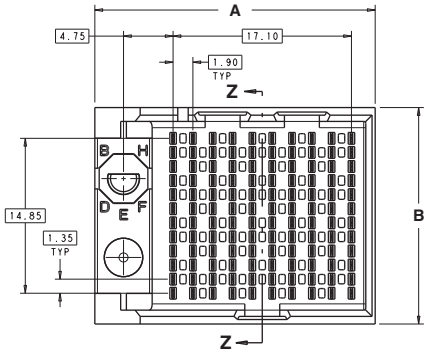

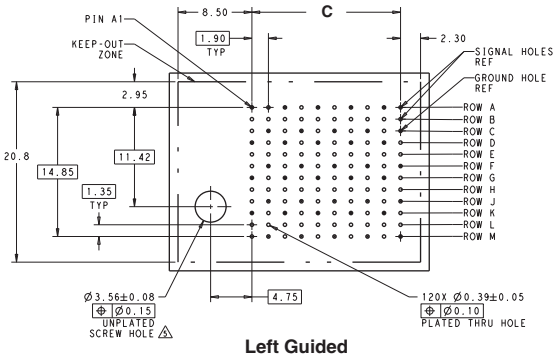

Left Guided Backplane Hole Pattern (Connector Side)

Key Position Chart	
None	
A	E
B	F
C	G
D	H

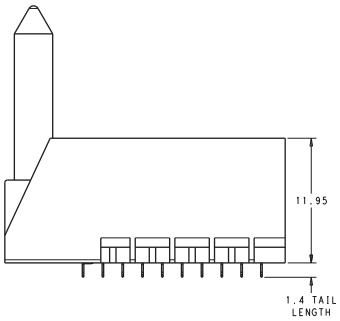

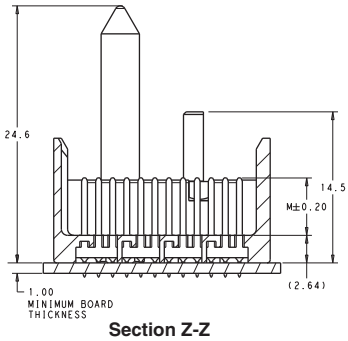

Section Z-Z

Visit the Impact connector webpage at: www.te.com/products/impact

Catalog 7-1773458-1
Revised 8-19

www.te.com

Dimensions are shown for reference purposes only. Specifications subject to change.

Dimensions are in millimeters unless otherwise specified.

USA: +1 (800) 522-6752

Canada: +1 (905) 475-6222
Mexico/C. Am.: +52 (0) 55-1106-0800
Latin/S. Am.: +54 (0) 11-4733-2200
Germany: +49 (0) 6251-133-1999

UK: +44 (0) 800-267666
France: +33 (0) 1-3420-8686
Netherlands: +31 (0) 73-6246-999
China: +86 (0) 400-820-6015

Backplane Header Assemblies (Continued)

3 Pair Backplane Header Assemblies

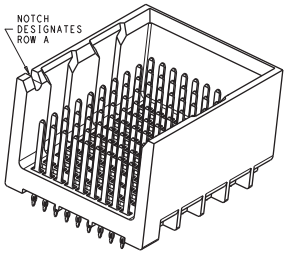

Column	Guide	Wall End	Part Number	Dimension A	Dimension B	Dimension C	Application Tooling	Mates With
10	Left	Right	2007779-1	26.9	16.7	17.1	2018377-1	2007703-1
		Open	2007777-1	25.5	16.7	17.1	2018377-1	2007703-1
	Right	Left	2007783-1	26.9	16.7	17.1	2018377-1	2007704-1
		Open	2007781-1	25.5	16.7	17.1	2018377-1	2007704-1
	Unguided	Left	2007789-1	20.3	16.7	17.1	2018377-1	2007705-1
		Right	2007791-1	20.3	16.7	17.1	2018377-1	2007705-1
		Dual	2007790-1	21.7	16.7	17.1	2018377-1	2007705-1
		Open	2007788-1	18.9	16.7	17.1	2018377-1	2007705-1
16	Left	Right	2007795-1	38.3	16.7	28.5	2018378-1	2007709-1
		Open	2007793-1	36.9	16.7	28.5	2018378-1	2007709-1
	Right	Left	2007799-1	38.3	16.7	28.5	2018378-1	2007710-1
		Open	2007797-1	36.9	16.7	28.5	2018378-1	2007710-1
	Unguided	Left	2007805-1	31.7	16.7	28.5	2018378-1	2007711-1
		Right	2007807-1	31.7	16.7	28.5	2018378-1	2007711-1
		Dual	2007806-1	33.1	16.7	28.5	2018378-1	2007711-1
		Open	2007804-1	30.3	16.7	28.5	2018378-1	2007711-1

Note: 10 column part number 2007791-1 is pictured below.

All the numbers provided are for 0.39mm PCB plated thru hole use. Part numbers are available for 0.46mm PCB plated thru holes by contacting the respective country product information center listed on the bottom of each page.

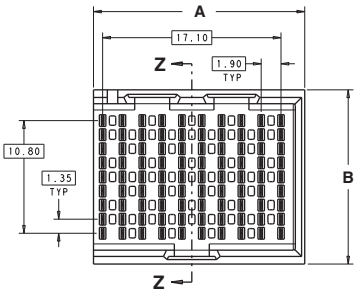

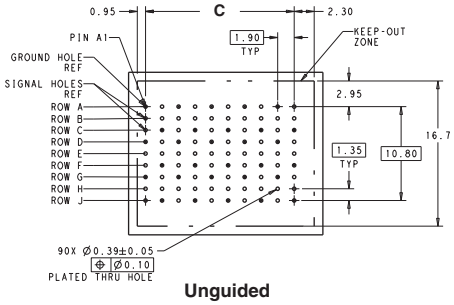

Unguided Backplane Hole Pattern (Connector Side)

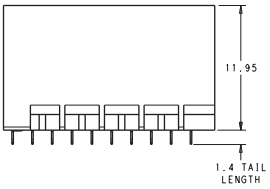

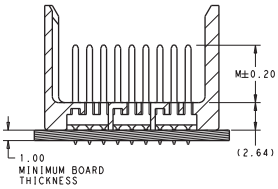

Section Z-Z

Visit the Impact connector webpage at: www.te.com/products/impact

Catalog 7-1773458-1
Revised 8-19

www.te.com

Dimensions are shown for reference purposes only. Specifications subject to change.

Dimensions are in millimeters unless otherwise specified.

USA: +1 (800) 522-6752

Canada: +1 (905) 475-6222
Mexico/C. Am.: +52 (0) 55-1106-0800
Latin/S. Am.: +54 (0) 11-4733-2200
Germany: +49 (0) 6251-133-1999

UK: +44 (0) 800-267666
France: +33 (0) 1-3420-8686
Netherlands: +31 (0) 73-6246-999
China: +86 (0) 400-820-6015

Backplane Header Assemblies (Continued)

2 Pair Backplane Header Assemblies

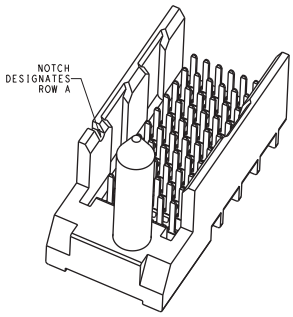

Column	Guide	Wall End	Part Number	Dimension A	Dimension B	Dimension C	Application Tooling	Mates With
10	Left	Right	2057421-1	26.9	12.7	17.1	2018536-1	2057403-1
		Open	2057419-1	25.5	12.7	17.1	2018536-1	2057403-1
	Right	Left	2057425-1	25.5	12.7	17.1	2018536-1	2057404-1
		Open	2057423-1	26.9	12.7	17.1	2018536-1	2057404-1
	Unguided	Left	2057431-1	20.3	12.7	17.1	2018536-1	2057405-1
		Right	2057433-1	20.3	12.7	17.1	2018536-1	2057405-1
		Dual	2057432-1	21.7	12.7	17.1	2018536-1	2057405-1
		Open	2057430-1	18.9	12.7	17.1	2018536-1	2057405-1
16	Left	Right	2057739-1	38.3	12.7	28.5	2018537-1	2057409-1
		Open	2057737-1	36.9	12.7	28.5	2018537-1	2057409-1
	Right	Left	2057743-1	38.3	12.7	28.5	2018537-1	2057410-1
		Open	2057741-1	36.9	12.7	28.5	2018537-1	2057410-1
	Unguided	Left	2057749-1	31.7	12.7	28.5	2018537-1	2057411-1
		Right	2057751-1	31.7	12.7	28.5	2018537-1	2057411-1
		Dual	2057750-1	33.1	12.7	28.5	2018537-1	2057411-1
		Open	2057748-1	30.3	12.7	28.5	2018537-1	2057411-1

Note: 10 column part number 2057419-1 is pictured below.

All the numbers provided are for 0.39mm PCB plated thru hole use. Part numbers are available for 0.46mm PCB plated thru holes by contacting the respective country product information center listed on the bottom of each page.

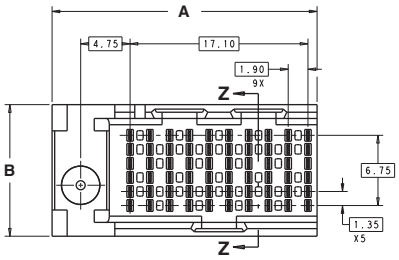

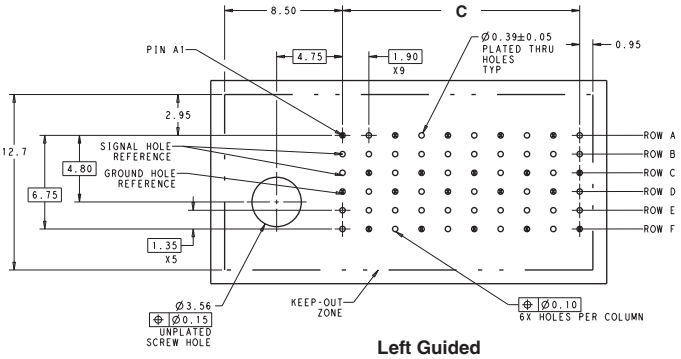

Left Guided Backplane Hole Pattern (Connector Side)

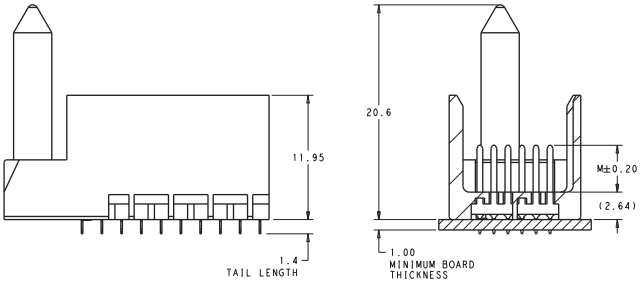

Section Z-Z

Visit the Impact connector webpage at: www.te.com/products/impact

Catalog 7-1773458-1
Revised 8-19

www.te.com

Dimensions are shown for reference purposes only. Specifications subject to change.

Dimensions are in millimeters unless otherwise specified.

USA: +1 (800) 522-6752

Canada: +1 (905) 475-6222
Mexico/C. Am.: +52 (0) 55-1106-0800
Latin/S. Am.: +54 (0) 11-4733-2200
Germany: +49 (0) 6251-133-1999

UK: +44 (0) 800-267666
France: +33 (0) 1-3420-8686
Netherlands: +31 (0) 73-6246-999
China: +86 (0) 400-820-6015

Coplanar Header (RAM) Assemblies (Continued)

2 Pair Coplanar Header (RAM) Assemblies

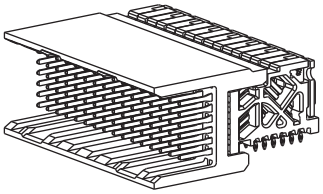

Column	Guide	Wall End	Part Number	Dimension A	Dimension B	Dimension C	Application Tooling	Mates With
10	Left	Right	2143017-2	28	12.7	17.1	2018779-1	2057404-1
		Open	2143016-2	26.6	12.7	17.1	2018779-1	2057404-1
	Right	Left	2143019-2	28	12.7	17.1	2018779-1	2057403-1
		Open	2143018-2	26.6	12.7	17.1	2018779-1	2057403-1
	Unguided	Left	2143013-2	20.4	12.7	17.1	2018779-1	2057405-1
		Right	2143015-2	20.4	12.7	17.1	2018779-1	2057405-1
		Dual	2143014-2	21.8	12.7	17.1	2018779-1	2057405-1
		Open	2143012-2	19	12.7	17.1	2018779-1	2057405-1
16	Left	Right	2143314-2	39.4	12.7	28.5	2018779-2	2057410-1
		Open	2143313-2	38	12.7	28.5	2018779-2	2057410-1
	Right	Left	2143316-2	39.4	12.7	28.5	2018779-2	2057409-1
		Open	2143315-2	38	12.7	28.5	2018779-2	2057409-1
	Unguided	Left	2143310-2	31.8	12.7	28.5	2018779-2	2057411-1
		Right	2143312-2	31.8	12.7	28.5	2018779-2	2057411-1
		Dual	2143311-2	33.2	12.7	28.5	2018779-2	2057411-1
		Open	2143309-2	30.4	12.7	28.5	2018779-2	2057411-1

Note: 16 column part number 2143309-1 is pictured below.

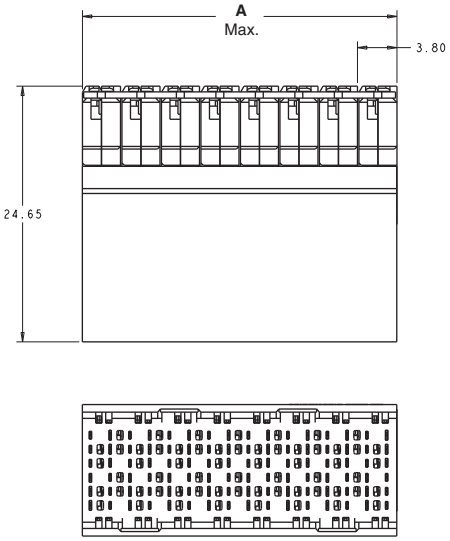

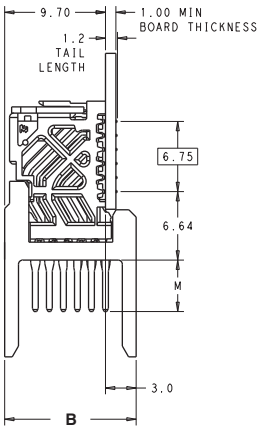

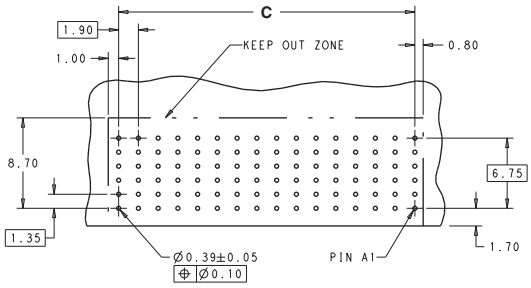

Recommended PCB Layout

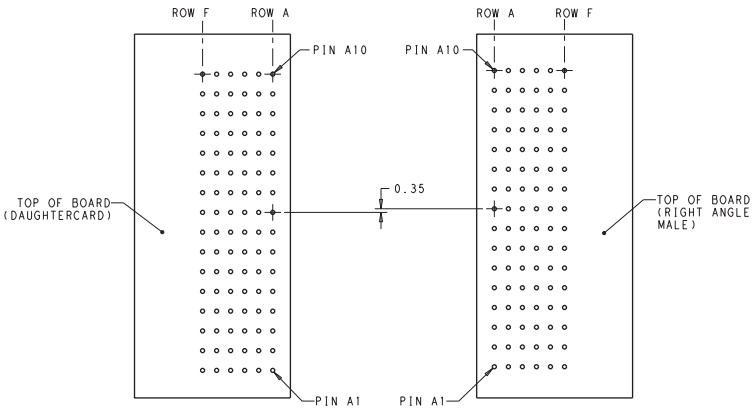

Coplanar Mated Signal Paths

Left Guided Right Angle Male Mates To Right Guided Right Angle Receptacle

Visit the Impact connector webpage at: www.te.com/products/Impact

Dimensions are shown for reference purposes only. Specifications subject to change.

Dimensions are in millimeters unless otherwise specified.

USA: +1 (800) 522-6752

Canada: +1 (905) 475-6222
Mexico/C. Am.: +52 (0) 55-1106-0800
Latin/S. Am.: +54 (0) 11-4733-2200
Germany: +49 (0) 6251-133-1999

UK: +44 (0) 800-267666
France: +33 (0) 1-3420-8686
Netherlands: +31 (0) 73-6246-999
China: +86 (0) 400-820-6015

Orthogonal Receptacle Assemblies

6 Pair Orthogonal Receptacle Assemblies

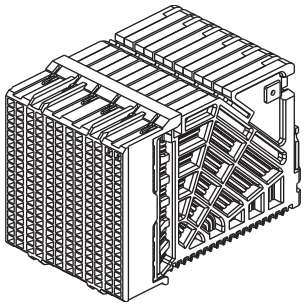

Column	Guide	Part Number	Dimension A	Dimension B	Dimension C	Application Tooling	Mates With
10	Left	2132718-1	28.35	37.3	18.1	2018773-1	2143249-1
	Right	2132719-1	28.35	37.3	18.1	2018773-1	2143251-1
	Unguided	2132720-1	20.25	37.3	18.1	2018773-1	2143255-1
12	Left	2132721-1	32.4	37.3	22.15	2018773-2	2143265-1
	Right	2132722-1	32.4	37.3	22.15	2018773-2	2143267-1
	Unguided	2132723-1	24.3	37.3	22.15	2018773-2	2143271-1

Note: 12 column part number 2132723-1 is pictured below.

All the numbers provided are for 0.39mm PCB plated thru hole use. Part numbers are available for 0.46mm PCB plated thru holes by contacting the respective country product information center listed on the bottom of each page.

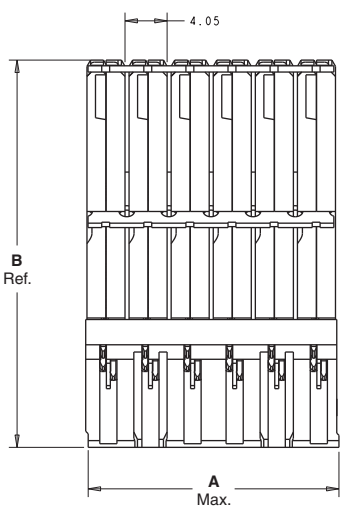

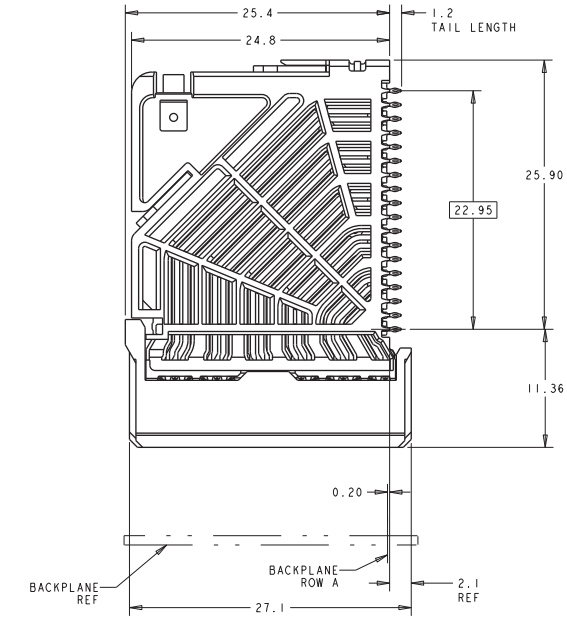

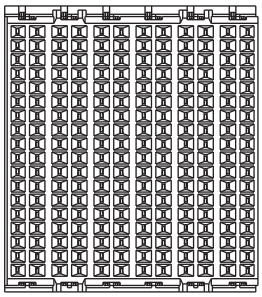

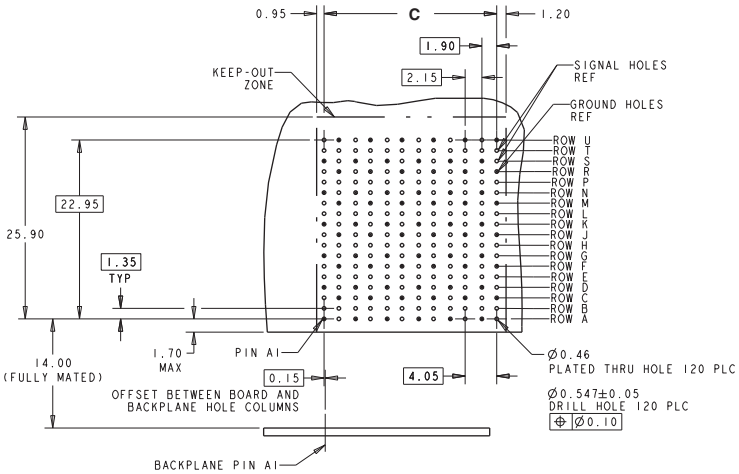

Recommended PCB Layout
Min. Board Thickness 1.0

Visit the Impact connector webpage at: www.te.com/products/impact

Catalog 7-1773458-1
Revised 8-19

www.te.com

Dimensions are shown for reference purposes only. Specifications subject to change.

Dimensions are in millimeters unless otherwise specified.

USA: +1 (800) 522-6752

Canada: +1 (905) 475-6222
Mexico/C. Am.: +52 (0) 55-1106-0800
Latin/S. Am.: +54 (0) 11-4733-2200
Germany: +49 (0) 6251-133-1999

UK: +44 (0) 800-267666
France: +33 (0) 1-3420-8686
Netherlands: +31 (0) 73-6246-999
China: +86 (0) 400-820-6015

Orthogonal Receptacle Assemblies (Continued)

5 Pair Orthogonal Receptacle Assemblies

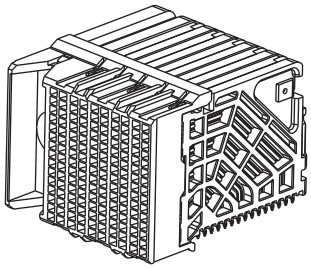

Column	Guide	Part Number	Dimension A	Dimension B	Dimension C	Application Tooling	Mates With
8	Left	2132690-1	24.3	32.3	14.05	2018772-1	2143545-1
	Right	2132691-1	24.3	32.3	14.05	2018772-1	2143547-1
	Unguided	2132692-1	16.2	32.3	14.05	2018772-1	2143550-1
10	Left	2132693-1	28.35	32.3	18.1	2018772-2	2143557-1
	Right	2132694-1	28.35	32.3	18.1	2018772-2	2143559-1
	Unguided	2132695-1	20.25	32.3	18.1	2018772-2	2143562-1
12	Left	2132696-1	32.4	32.3	22.15	2018772-3	2143569-1
	Right	2132697-1	32.4	32.3	22.15	2018772-3	2143571-1
	Unguided	2132698-1	24.3	32.3	22.15	2018772-3	2143574-1

Note: 10 column part number 2132693-1 is pictured below.

All the numbers provided are for 0.39mm PCB plated thru hole use. Part numbers are available for 0.46mm PCB plated thru holes by contacting the respective country product information center listed on the bottom of each page.

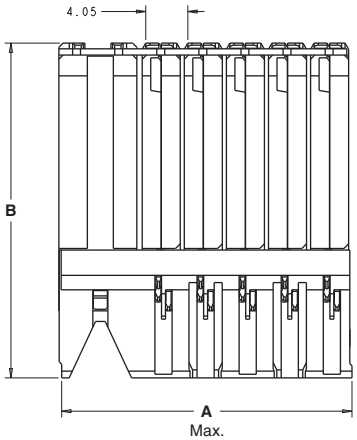

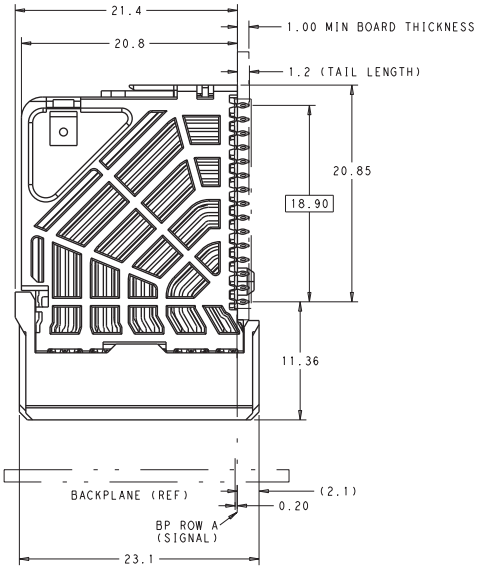

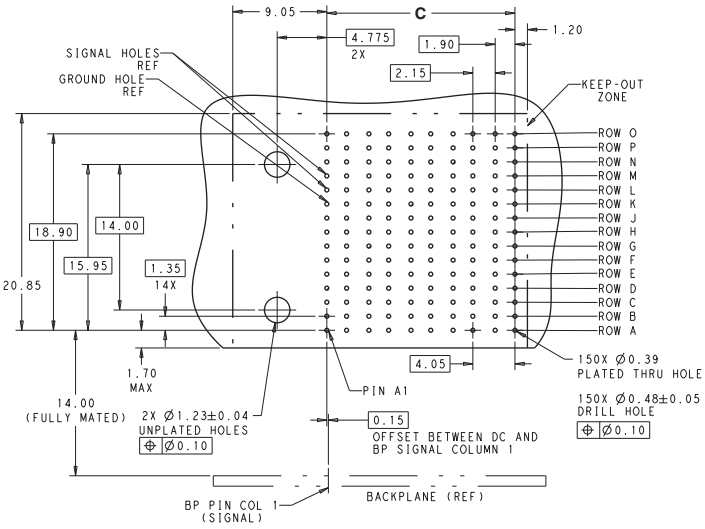

Recommended PCB Layout

Visit the Impact connector webpage at: www.te.com/products/impact

Catalog 7-1773458-1
Revised 8-19

www.te.com

Dimensions are shown for reference purposes only. Specifications subject to change.

Dimensions are in millimeters unless otherwise specified.

USA: +1 (800) 522-6752

Canada: +1 (905) 475-6222
Mexico/C. Am.: +52 (0) 55-1106-0800
Latin/S. Am.: +54 (0) 11-4733-2200
Germany: +49 (0) 6251-133-1999

UK: +44 (0) 800-267666
France: +33 (0) 1-3420-8686
Netherlands: +31 (0) 73-6246-999
China: +86 (0) 400-820-6015

Orthogonal Receptacle Assemblies (Continued)

4 Pair Orthogonal Receptacle Assemblies

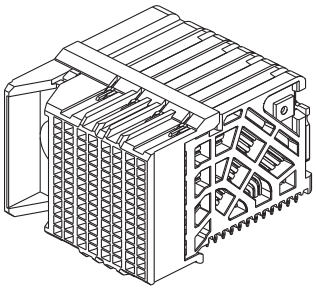

Column	Guide	Part Number	Dimension A	Dimension B	Dimension C	Application Tooling	Mates With
6	Left	2132461-1	20.25	28.2	10	2018771-1	2132593-1
	Right	2132462-1	20.25	28.2	10	2018771-1	2132595-1
	Unguided	2132463-1	12.15	28.2	10	2018771-1	2132599-1
8	Left	2132464-1	24.3	28.2	14.05	2018771-2	2132609-1
	Right	2132465-1	24.3	28.2	14.05	2018771-2	2132611-1
	Unguided	2132466-1	16.2	28.2	14.05	2018771-2	2132615-1
10	Left	2132467-1	28.35	28.2	18.1	2018771-3	2132597-1
	Right	2132468-1	28.35	28.2	18.1	2018771-3	2132599-1
	Unguided	2132469-1	20.25	28.2	18.1	2018771-3	2132631-1

Note: 8 column part number 2132464-1 is pictured below.

All the numbers provided are for 0.39mm PCB plated thru hole use. Part numbers are available for 0.46mm PCB plated thru holes by contacting the respective country product information center listed on the bottom of each page.

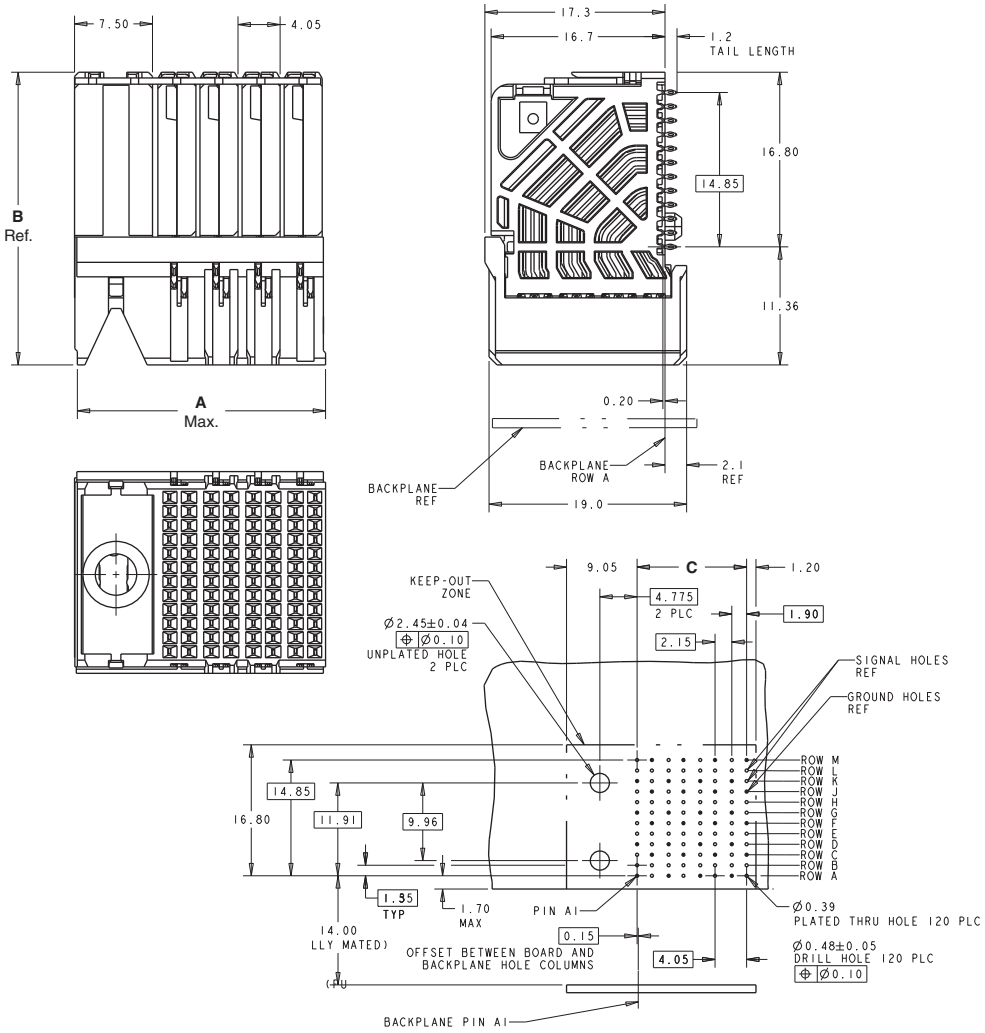

Recommended PCB Layout
Min. Board Thickness 1.0

Visit the Impact connector webpage at: www.te.com/products/impact

Catalog 7-1773458-1
Revised 8-19

www.te.com

Dimensions are shown for reference purposes only. Specifications subject to change.

Dimensions are in millimeters unless otherwise specified.

USA: +1 (800) 522-6752
Canada: +1 (905) 475-6222
Mexico/C. Am.: +52 (0) 55-1106-0800
Latin/S. Am.: +54 (0) 11-4733-2200
Germany: +49 (0) 6251-133-1999
UK: +44 (0) 800-267666
France: +33 (0) 1-3420-8686
Netherlands: +31 (0) 73-6246-999
China: +86 (0) 400-820-6015

Orthogonal Receptacle Assemblies (Continued)

3 Pair Orthogonal Receptacle Assemblies

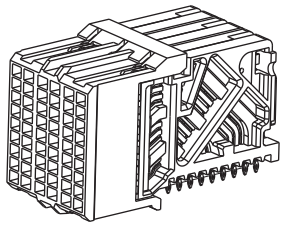

Column	Guide	Part Number	Dimension A	Dimension B	Dimension C	Application Tooling	Mates With
6	Left	2132422-1	20.25	24.1	10	2018770-1	2132561-1
	Right	2132423-1	20.25	24.1	10	2018770-1	2132563-1
	Unguided	2132424-1	12.15	24.1	10	2018770-1	2132567-1
8	Left	2132425-1	24.3	24.1	14.05	2018770-2	2132577-1
	Right	2132426-1	24.3	24.1	14.05	2018770-2	2132579-1
	Unguided	2132427-1	16.2	24.1	14.05	2018770-2	2132583-1

Note: 6 column part number 2132424-1 is pictured below.

All the numbers provided are for 0.39mm PCB plated thru hole use. Part numbers are available for 0.46mm PCB plated thru holes by contacting the respective country product information center listed on the bottom of each page.

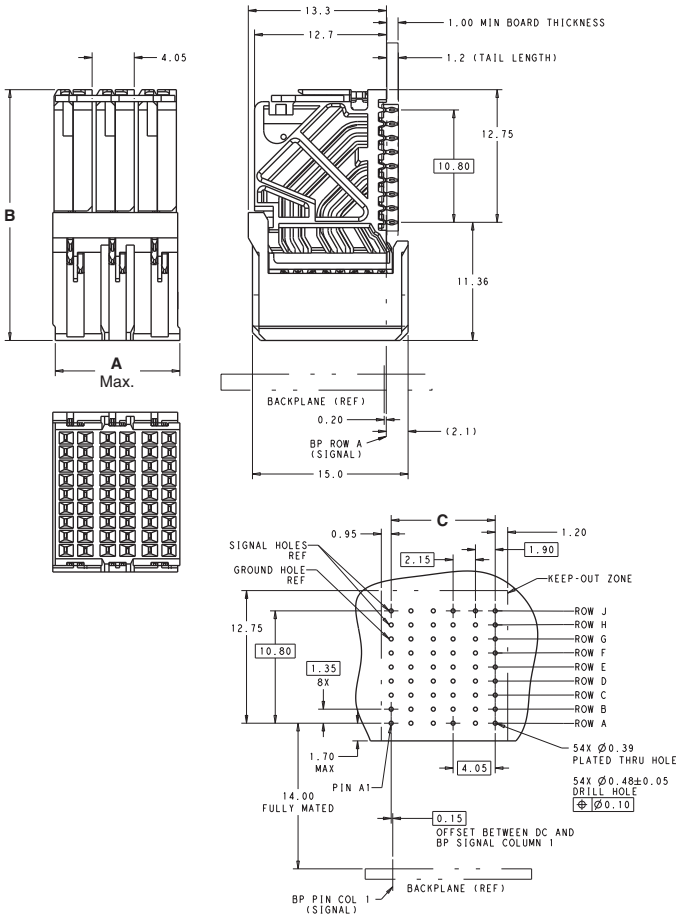

Recommended PCB Layout

Visit the Impact connector webpage at: www.te.com/products/impact

Dimensions are shown for reference purposes only. Specifications subject to change.

Dimensions are in millimeters unless otherwise specified.

USA: +1 (800) 522-6752

Canada: +1 (905) 475-6222
Mexico/C. Am.: +52 (0) 55-1106-0800
Latin/S. Am.: +54 (0) 11-4733-2200
Germany: +49 (0) 6251-133-1999

UK: +44 (0) 800-267666
France: +33 (0) 1-3420-8686
Netherlands: +31 (0) 73-6246-999
China: +86 (0) 400-820-6015

Orthogonal Header Assemblies

6 Pair Orthogonal Header Assemblies

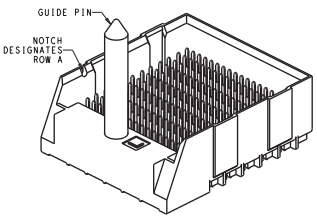

All the numbers provided are for 0.39mm PCB plated thru hole use. Part numbers are available for 0.46mm PCB plated thru holes by contacting the respective country product information center listed on the bottom of each page.

Column	Guide	Wall End	Part Number	Dimension A	Dimension B	Dimension C	Application Tooling	Mates With
10	Left	Right	2143250-1	28.4	28.9	18.5	2018773-1	2132718-1
		Open	2143249-1	27	28.9	18.5	2018773-1	2132718-1
	Right	Left	2143252-1	28.4	28.9	18.5	2018773-1	2132719-1
		Open	2143251-1	27	28.9	18.5	2018773-1	2132719-1
	Unguided	Left	2143254-1	21.5	28.9	18.5	2018773-1	2132720-1
		Right	2143256-1	21.5	28.9	18.5	2018773-1	2132720-1
		Dual	2143255-1	22.9	28.9	18.5	2018773-1	2132720-1
		Open	2143253-1	20.1	28.9	18.5	2018773-1	2132720-1
12	Left	Right	2143266-1	32.4	28.9	22.55	2018773-2	2132721-1
		Open	2143265-1	31	28.9	22.55	2018773-2	2132721-1
	Right	Left	2143268-1	32.4	28.9	22.55	2018773-2	2132722-1
		Open	2143267-1	31	28.9	22.55	2018773-2	2132722-1
	Unguided	Left	2143270-1	25.55	28.9	22.55	2018773-2	2132723-1
		Right	2143272-1	25.55	28.9	22.55	2018773-2	2132723-1
		Dual	2143271-1	26.95	28.9	22.55	2018773-2	2132723-1
		Open	2143269-1	24.15	28.9	22.55	2018773-2	2132723-1

Note: 12 column part number 2143266-1 is pictured below.

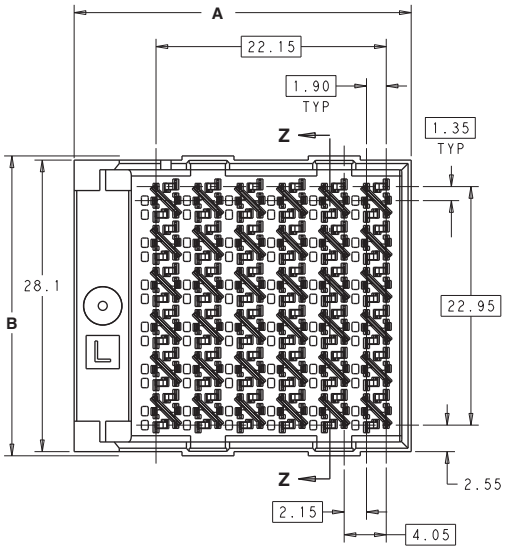

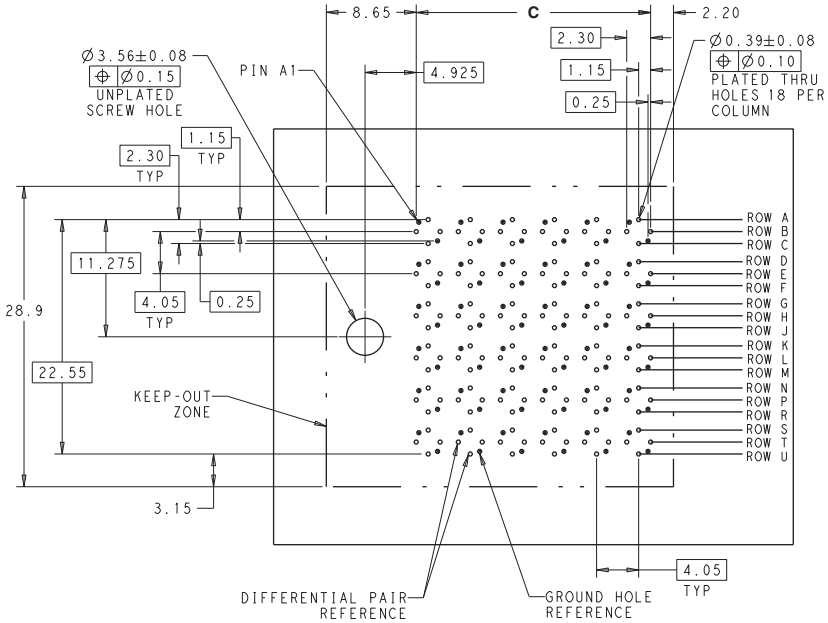

Left Guided Backplane Hole Pattern (Connector Side)

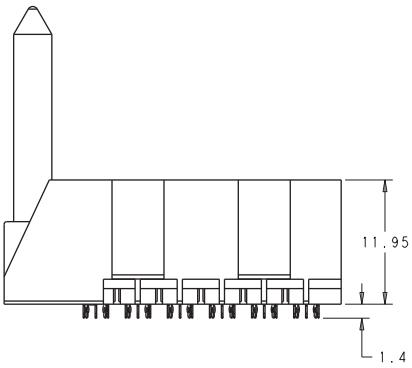

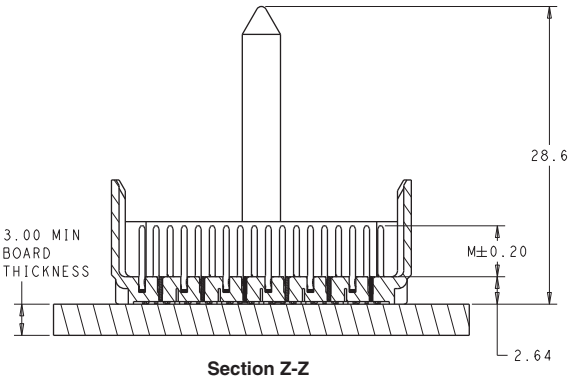

Section Z-Z

Visit the Impact connector webpage at: www.te.com/products/impact

Catalog 7-1773458-1
Revised 8-19

www.te.com

Dimensions are shown for reference purposes only. Specifications subject to change.

Dimensions are in millimeters unless otherwise specified.

USA: +1 (800) 522-6752

Canada: +1 (905) 475-6222
Mexico/C. Am.: +52 (0) 55-1106-0800
Latin/S. Am.: +54 (0) 11-4733-2200
Germany: +49 (0) 6251-133-1999

UK: +44 (0) 800-267666
France: +33 (0) 1-3420-8686
Netherlands: +31 (0) 73-6246-999
China: +86 (0) 400-820-6015

Orthogonal Header Assemblies (Continued)

5 Pair Orthogonal Header Assemblies

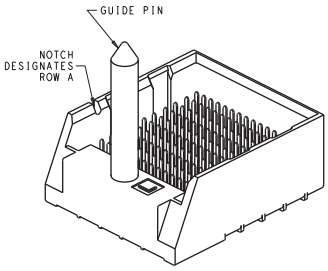

Column	Guide	Wall End	Part Number	Dimension A	Dimension B	Dimension C	Application Tooling	Mates With
8	Left	Right	2143546-1	24.3	24.8	14.45	2018772-1	2132690-1
		Open	2143545-1	22.9	24.8	14.45	2018772-1	2132690-1
	Right	Left	2143548-1	24.3	24.8	14.45	2018772-1	2132691-1
		Open	2143547-1	22.9	24.8	14.45	2018772-1	2132691-1
	Unguided	Left	2143621-1	17.45	24.8	14.45	2018772-1	2132692-1
		Right	2143622-1	17.45	24.8	14.45	2018772-1	2132692-1
		Dual	2143550-1	18.85	24.8	14.45	2018772-1	2132692-1
		Open	2143549-1	16.05	24.8	14.45	2018772-1	2132692-1
10	Left	Right	2143558-1	28.4	24.8	18.5	2018772-2	2132693-1
		Open	2143557-1	27	24.8	18.5	2018772-2	2132693-1
	Right	Left	2143560-1	28.4	24.8	18.5	2018772-2	2132694-1
		Open	2143559-1	27	24.8	18.5	2018772-2	2132694-1
	Unguided	Left	2143625-1	21.5	24.8	18.5	2018772-2	2132695-1
		Right	2143626-1	21.5	24.8	18.5	2018772-2	2132695-1
		Dual	2143562-1	22.9	24.8	18.5	2018772-2	2132695-1
		Open	2143561-1	20.1	24.8	18.5	2018772-2	2132695-1
12	Left	Right	2143570-1	32.4	24.8	22.55	2018772-3	2132696-1
		Open	2143569-1	31	24.8	22.55	2018772-3	2132696-1
	Right	Left	2143572-1	32.4	24.8	22.55	2018772-3	2132697-1
		Open	2143571-1	31	24.8	22.55	2018772-3	2132697-1
	Unguided	Left	2143629-1	25.55	24.8	22.55	2018772-3	2132698-1
		Right	2143630-1	25.55	24.8	22.55	2018772-3	2132698-1
		Dual	2143574-1	26.95	24.8	22.55	2018772-3	2132698-1
		Open	2143573-1	24.15	24.8	22.55	2018772-3	2132698-1

Note: 10 column part number 2143558-1 is pictured below.

All the numbers provided are for 0.39mm PCB plated thru hole use. Part numbers are available for 0.46mm PCB plated thru holes by contacting the respective country product information center listed on the bottom of each page.

Visit the Impact connector webpage at: www.te.com/products/Impact

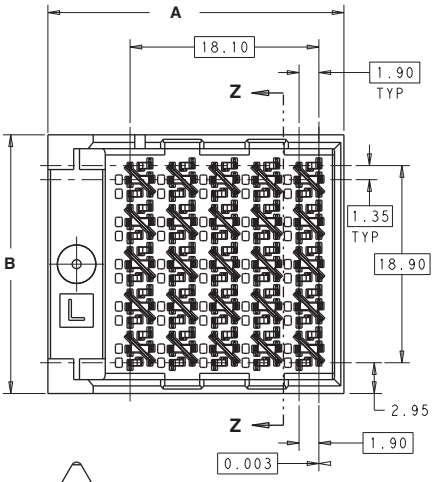

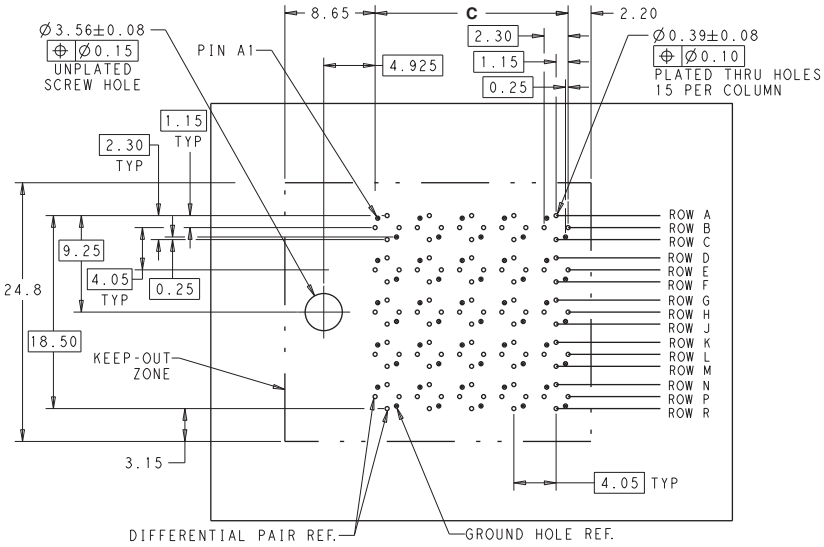

Left Guided Backplane Hole Pattern (Connector Side)

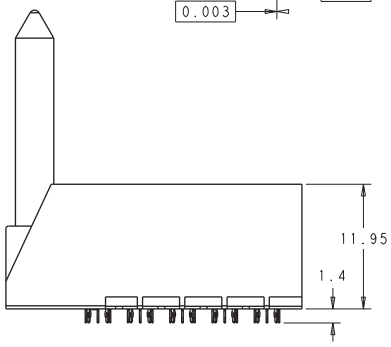

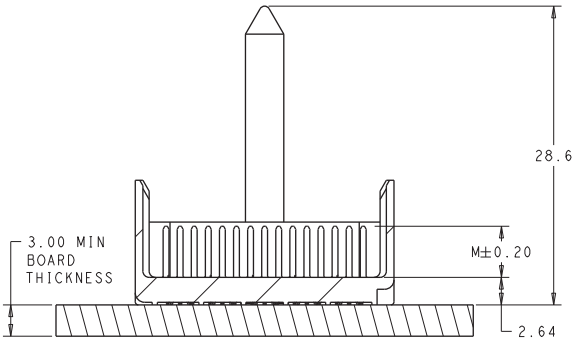

Section Z-Z

Catalog 7-1773458-1
Revised 8-19

www.te.com

Dimensions are shown for reference purposes only. Specifications subject to change.

Dimensions are in millimeters unless otherwise specified.

USA: +1 (800) 522-6752

Canada: +1 (905) 475-6222
Mexico/C. Am.: +52 (0) 55-1106-0800
Latin/S. Am.: +54 (0) 11-4733-2200
Germany: +49 (0) 6251-133-1999

UK: +44 (0) 800-267666
France: +33 (0) 1-3420-8686
Netherlands: +31 (0) 73-6246-999
China: +86 (0) 400-820-6015

Orthogonal Header Assemblies (Continued)

4 Pair Orthogonal Header Assemblies

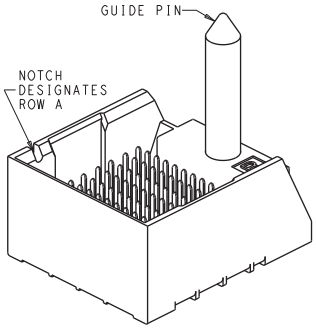

Note: 8 column part number 2132610-1 is pictured below.

All the numbers provided are for 0.39mm PCB plated thru hole use. Part numbers are available for 0.46mm PCB plated thru holes by contacting the respective country product information center listed on the bottom of each page.

Column	Guide	Wall End	Part Number	Dimension A	Dimension B	Dimension C	Application Tooling	Mates With
6	Left	Right	2132594-1	20.3	20.8	10.4	2018771-1	2132461-1
		Open	2132593-1	18.9	20.8	10.4	2018771-1	2132461-1
	Right	Left	2132596-1	20.3	20.8	10.4	2018771-1	2132462-1
		Open	2132595-1	18.9	20.8	10.4	2018771-1	2132462-1
	Unguided	Left	2132598-1	13.4	20.8	10.4	2018771-1	2132463-1
		Right	2132600-1	13.4	20.8	10.4	2018771-1	2132463-1
		Dual	2132599-1	14.8	20.8	10.4	2018771-1	2132463-1
		Open	2132597-1	12	20.8	10.4	2018771-1	2132463-1
8	Left	Right	2132610-1	24.3	20.8	14.45	2018771-2	2132464-1
		Open	2132609-1	22.9	20.8	14.45	2018771-2	2132464-1
	Right	Left	2132612-1	24.3	20.8	14.45	2018771-2	2132465-1
		Open	2132611-1	22.9	20.8	14.45	2018771-2	2132465-1
	Unguided	Left	2132614-1	17.45	20.8	14.45	2018771-2	2132466-1
		Right	2132616-1	17.45	20.8	14.45	2018771-2	2132466-1
		Dual	2132615-1	18.85	20.8	14.45	2018771-2	2132466-1
		Open	2132613-1	16.05	20.8	14.45	2018771-2	2132466-1
10	Left	Right	2132626-1	28.4	20.8	18.5	2018771-3	2132467-1
		Open	2132625-1	27	20.8	18.5	2018771-3	2132467-1
	Right	Left	2132628-1	28.4	20.8	18.5	2018771-3	2132468-1
		Open	2132627-1	27	20.8	18.5	2018771-3	2132468-1
	Unguided	Left	2132630-1	21.5	20.8	18.5	2018771-3	2132469-1
		Right	2132632-1	21.5	20.8	18.5	2018771-3	2132469-1
		Dual	2132631-1	22.9	20.8	18.5	2018771-3	2132469-1
		Open	2132629-1	20.1	20.8	18.5	2018771-3	2132469-1

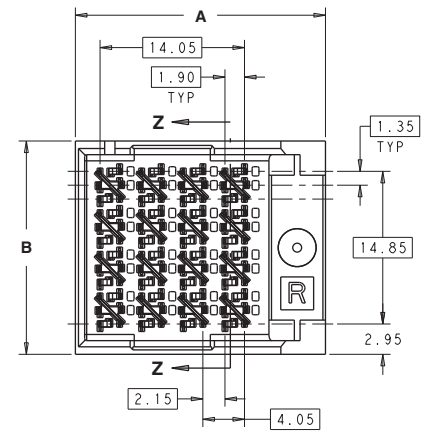

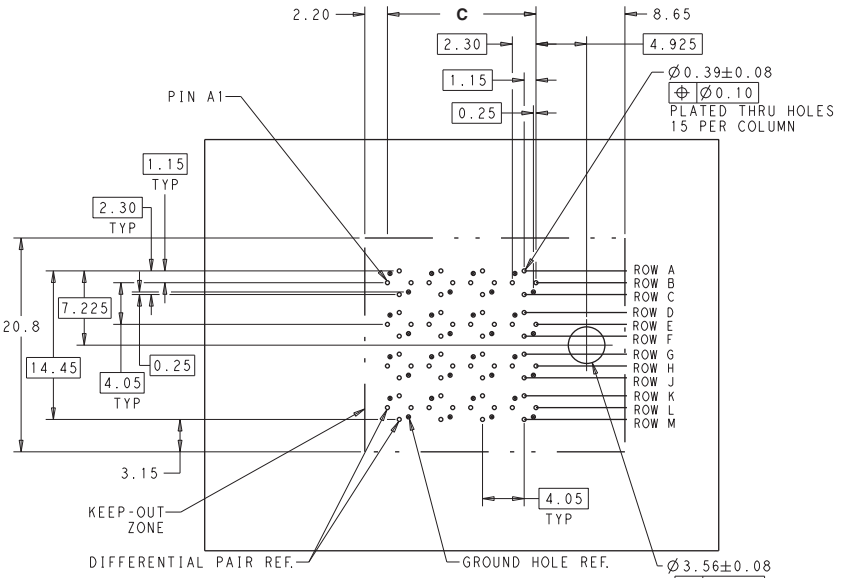

Left Guided Backplane Hole Pattern (Connector Side)

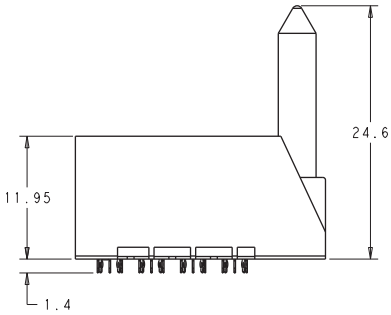

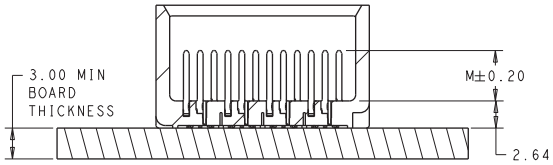

Section Z-Z

Visit the Impact connector webpage at: www.te.com/products/impact

Catalog 7-1773458-1
Revised 8-19

www.te.com

Dimensions are shown for reference purposes only. Specifications subject to change.

Dimensions are in millimeters unless otherwise specified.

USA: +1 (800) 522-6752

Canada: +1 (905) 475-6222
Mexico/C. Am.: +52 (0) 55-1106-0800
Latin/S. Am.: +54 (0) 11-4733-2200
Germany: +49 (0) 6251-133-1999

UK: +44 (0) 800-267666
France: +33 (0) 1-3420-8686
Netherlands: +31 (0) 73-6246-999
China: +86 (0) 400-820-6015

Orthogonal Header Assemblies (Continued)

3 Pair Orthogonal Header Assemblies

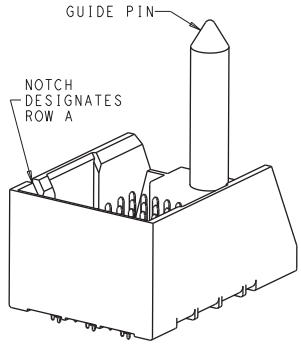

Column	Guide	Wall End	Part Number	Dimension A	Dimension B	Dimension C	Application Tooling	Mates With
6	Left	Right	2132562-1	20.3	16.7	10.4	2018770-1	2132422-1
		Open	2132561-1	18.9	16.7	10.4	2018770-1	2132422-1
	Right	Left	2132564-1	20.3	16.7	10.4	2018770-1	2132423-1
		Open	2132563-1	18.9	16.7	10.4	2018770-1	2132423-1
	Unguided	Left	2132566-1	13.4	16.7	10.4	2018770-1	2132424-1
		Right	2132568-1	13.4	16.7	10.4	2018770-1	2132424-1
		Dual	2132567-1	14.8	16.7	10.4	2018770-1	2132424-1
		Open	2132565-1	12	16.7	10.4	2018770-1	2132424-1
8	Left	Right	2132578-1	24.3	16.7	14.45	2018770-2	2132425-1
		Open	2132577-1	22.9	16.7	14.45	2018770-2	2132425-1
	Right	Left	2132580-1	24.3	16.7	14.45	2018770-2	2132426-1
		Open	2132579-1	22.9	16.7	14.45	2018770-2	2132426-1
	Unguided	Left	2132582-1	17.45	16.7	14.45	2018770-2	2132427-1
		Right	2132584-1	17.45	16.7	14.45	2018770-2	2132427-1
		Dual	2132583-1	18.85	16.7	14.45	2018770-2	2132427-1
		Open	2132581-1	16.05	16.7	14.45	2018770-2	2132427-1

Note: 8 column part number 2132580-1 is pictured below.

All the numbers provided are for 0.39mm PCB plated thru hole use. Part numbers are available for 0.46mm PCB plated thru holes by contacting the respective country product information center listed on the bottom of each page.

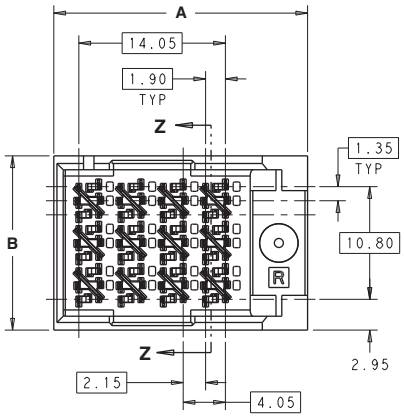

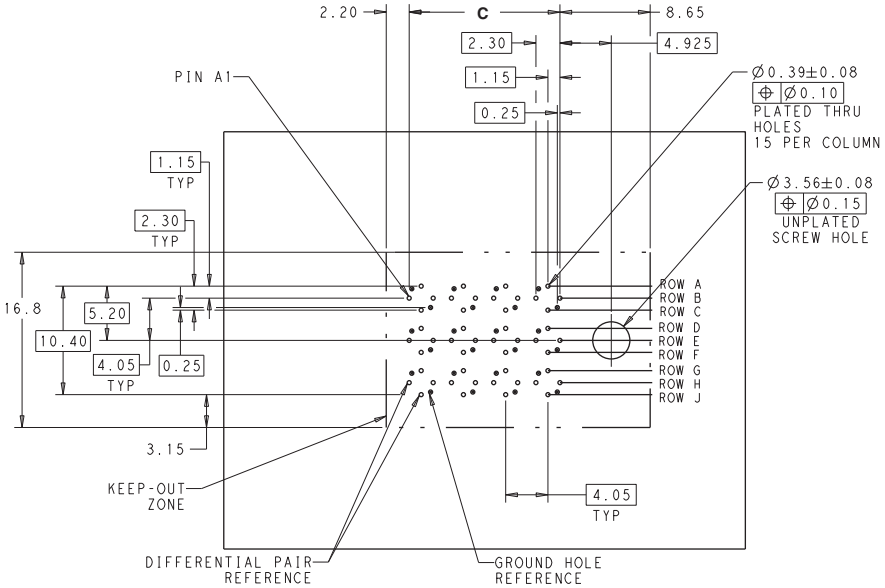

Left Guided Backplane Hole Pattern (Connector Side)

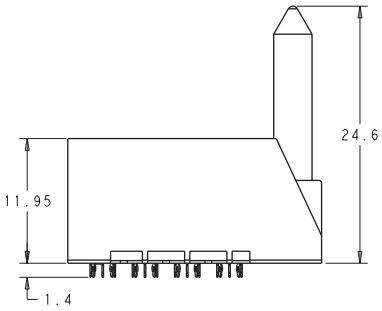

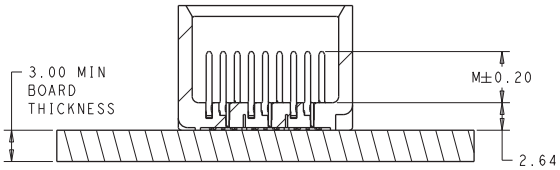

Section Z-Z

Visit the Impact connector webpage at: www.te.com/products/impact

Catalog 7-1773458-1
Revised 8-19

www.te.com

Dimensions are shown for reference purposes only. Specifications subject to change.

Dimensions are in millimeters unless otherwise specified.

USA: +1 (800) 522-6752

Canada: +1 (905) 475-6222
Mexico/C. Am.: +52 (0) 55-1106-0800
Latin/S. Am.: +54 (0) 11-4733-2200
Germany: +49 (0) 6251-133-1999

UK: +44 (0) 800-267666
France: +33 (0) 1-3420-8686
Netherlands: +31 (0) 73-6246-999
China: +86 (0) 400-820-6015

Part Number Index

Note: This index lists all cataloged parts by base no. only. Complete part nos. (with prefixes and/or suffixes) are shown on the page(s) indicated.

Part No.	Page
2007703	11, 17
2007704	11, 17
2007705	4, 11, 17
2007709	11, 17
2007710	11, 17
2007711	11, 17
2007715	10, 16
2007716	10, 16
2007717	4, 10, 16
2007721	10, 16
2007722	10, 16
2007723	10, 16
2007739	8, 14
2007740	8, 14
2007741	4, 8, 14
2007745	8, 14
2007746	8, 14
2007747	8, 14
2007777	11, 17
2007779	17
2007781	11, 17
2007783	17
2007786	4
2007788	17
2007789	11, 17
2007790	17
2007791	17
2007793	11, 17
2007795	17
2007797	11, 17
2007799	17
2007804	17
2007805	11, 17
2007806	17
2007807	17
2007809	10, 16
2007811	16
2007813	10, 16
2007815	16
2007818	4
2007820	16
2007821	16
2007822	10, 16
2007823	16
2007825	10, 16
2007827	16
2007829	10, 16
2007831	16
2007836	16
2007837	16
2007838	10, 16
2007839	16
2007840	13
2007841	9, 15
2007843	15
2007844	13
2007845	9, 15
2007847	15
2007850	4, 13
2007852	15
2007853	15
2007854	9, 15

Part No.	Page
2007855	15
2007856	13
2007857	9, 15
2007860	13
2007861	9, 15
2007863	15
2007866	13
2007868	15
2007869	15
2007870	9, 15
2007871	15
2007873	8, 14
2007875	14
2007877	8, 14
2007879	14
2007882	4
2007884	14
2007885	14
2007886	8, 14
2007887	14
2007889	8, 14
2007891	14
2007893	8, 14
2007895	14
2007900	14
2007901	14
2007902	8, 14
2007903	14
2057403	12, 18, 19
2057404	12, 18, 19
2057405	4, 12, 18, 19
2057409	12, 18, 19
2057410	12, 18, 19
2057411	12, 18, 19
2057419	12, 18
2057421	18
2057423	12, 18
2057425	18
2057428	4
2057430	18
2057431	18
2057432	12, 18
2057433	18
2057737	12, 18
2057739	18
2057741	12, 18
2057743	18
2057748	18
2057749	18
2057750	12, 18
2057751	18
2110104	9, 15
2110105	9, 15
2110106	4, 9, 15
2110122	9, 15
2110123	9, 15
2110124	9, 15
2132422	23, 27
2132423	23, 27
2132424	23, 27
2132425	23, 27
2132426	23, 27

Part No.	Page
2132427	23, 27
2132461	22, 26
2132462	22, 26
2132463	22, 26
2132464	22, 26
2132465	22, 26
2132466	22, 26
2132467	22, 26
2132468	22, 26
2132469	22, 26
2132561	23, 27
2132562	27
2132563	23, 27
2132564	27
2132565	27
2132566	27
2132567	23, 27
2132568	27
2132577	23, 27
2132578	27
2132579	23, 27
2132580	27
2132581	27
2132582	27
2132583	23, 27
2132584	27
2132593	22, 26
2132594	26
2132595	22, 26
2132596	26
2132597	22, 26
2132598	26
2132599	22, 26
2132600	26
2132609	22, 26
2132610	26
2132611	22, 26
2132612	26
2132613	26
2132614	26
2132615	22, 26
2132616	26
2132625	26
2132626	26
2132627	26
2132628	26
2132629	26
2132630	26
2132631	22, 26
2132632	26
2132690	21, 25
2132691	21, 25
2132692	21, 25
2132693	21, 25
2132694	21, 25
2132695	21, 25
2132696	21, 25
2132697	21, 25
2132698	21, 25
2132718	20, 24
2132719	20, 24
2132720	20, 24

Catalog 7-1773458-1
Revised 8-19

www.te.com

Dimensions are shown for reference purposes only. Specifications subject to change.

Dimensions are in millimeters unless otherwise specified.

USA: +1 (800) 522-6752
Canada: +1 (905) 475-6222
Mexico/C. Am.: +52 (0) 55-1106-0800
Latin/S. Am.: +54 (0) 11-4733-2200
Germany: +49 (0) 6251-133-1999
UK: +44 (0) 800-267666
France: +33 (0) 1-3420-8686
Netherlands: +31 (0) 73-6246-999
China: +86 (0) 400-820-6015

Part Number Index (Continued)

Part No.	Page
2132721	20, 24
2132722	20, 24
2132723	20, 24
2143012	19
2143013	19
2143014	19
2143015	19
2143016	19
2143017	19
2143018	19
2143019	19
2143249	20, 24
2143250	24
2143251	20, 24
2143252	24
2143253	24
2143254	24
2143255	20, 24
2143256	24
2143265	20, 24
2143266	24
2143267	20, 24

Part No.	Page
2143268	24
2143269	24
2143270	24
2143271	20, 24
2143272	24
2143309	19
2143310	19
2143311	19
2143312	19
2143313	19
2143314	19
2143315	19
2143316	19
2143545	21, 25
2143546	25
2143547	21, 25
2143548	25
2143549	25
2143550	21, 25
2143557	21, 25
2143558	25
2143559	21, 25

Part No.	Page
2143560	25
2143561	25
2143562	21, 25
2143569	21, 25
2143570	25
2143571	21, 25
2143572	25
2143573	25
2143574	21, 25
2143621	25
2143622	25
2143625	25
2143626	25
2143629	25
2143630	25
2149392	13
2149393	13
2149394	13
2149911	13
2149912	13
2149913	13

Tooling Part Number Index

Part No.	Page
2018377	17
2018378	17
2018380	11
2018381	11
2018446	15
2018448	9
2018513	16
2018524	16
2018525	15

Part No.	Page
2018527	14
2018528	14
2018530	10
2018531	10
2018532	9
2018534	8
2018535	8
2018536	18
2018537	18

Part No.	Page
2018538	12
2018539	12
2018770	23, 27
2018771	22, 26
2018772	21, 25
2018773	20, 24
2018774	13
2018779	19

Dimensions are shown for reference purposes only. Specifications subject to change.

Dimensions are in millimeters unless otherwise specified.

USA: +1 (800) 522-6752
Canada: +1 (905) 475-6222
Mexico/C. Am.: +52 (0) 55-1106-0800
Latin/S. Am.: +54 (0) 11-4733-2200
Germany: +49 (0) 6251-133-1999
UK: +44 (0) 800-267666
France: +33 (0) 1-3420-8686
Netherlands: +31 (0) 73-6246-999
China: +86 (0) 400-820-6015

te.com

© 2011 Tyco Electronics Corporation, a TE Connectivity Ltd. Company. All Rights Reserved.
7-1773458-1 LUG PDF 04/2011 updated 08/2019
TE Connectivity, TE connectivity (logo) and TE (logo) are trademarks. Other logos, product and/or company names might be trademarks of their respective owners.