THIS DRAWING IS UNPUBLISHED. RELEASED FOR PUBLICATION 20
© COPYRIGHT 20 BY TYCO ELECTRONICS CORPORATION, ALL RIGHTS RESERVED.

LOC A DIST 66

REVISIONS

P	LTR	DESCRIPTION	DATE	DWN	APVD
	F	ECR-18-007955	24MAY2018	JAH	JDG
	F1	ECR-18-009983	27JUN2018	MZ	KZ
	G	ECR-19-010979	12JUL2019	FZ	TE
	H	ECR-23-181674	19JUL2023	ROY	GEB

ATLANTIC VERSION TERMINATOR INTERFACE ADAPTER

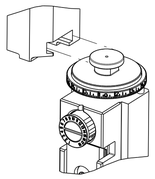

PART NUMBER	REVISION	DESCRIPTION	FEED TYPE
2151632-1	H	FINE CRIMP HEIGHT ADJUST	MECHANICAL
2151632-2	H	FINE CRIMP HEIGHT ADJUST	PNEUMATIC
5-2151632-1	H	SEAL STRIPPER CRIMPER TERMINATING UNIT	MECHANICAL
5-2151632-2	H	SEAL STRIPPER CRIMPER TERMINATING UNIT	PNEUMATIC
7-2151632-1	H	MECHANICAL AND CRIMP TOOLING KIT	MECHANICAL
7-2151632-2	H	PNEUMATIC AND CRIMP TOOLING KIT	PNEUMATIC
7-2151632-7	A	CRIMP TOOLING KIT	-

APPLICATOR DATA

CRIMP	SIZE	TYPE
WIRE	1.30 mm [.051]	F
INSUL	2.03 mm [.080]	O

APPLICATOR INSTRUCTIONS 408-35042

TERMINAL DATA: YAZAKI TERMINAL YAZAKI CRIMP SPECIFICATION

TERMINAL NAME: RH TYPE TERMINAL FEMALE

WIRE STRIP LENGTH	INSULATION DIAMETER RANGE
3.64-3.66 mm [.143-.144 IN]	∅0.91-1.90 mm [.036-.075 IN]

TERMINAL APPLICATION SPECIFICATION	7116-4415-02 Rev WA1851	- / -
	-	- / -

TERMINALS APPLIED 7

TE TERMINAL	YAZAKI TERMINAL	TE SEAL	YAZAKI SEAL	CABLE DIAMETER
1572428-1	7116-4415-02	1949745-1	7158-3167-80	6
1572428-2	7116-4415-08	2113279-1	7158-3166-60	∅1.15-1.50
1572428-3	7116-4487-08	1949841-1	7158-3165-90	∅0.9-1.25
1572429-1	7114-4415-02			

WIRE SIZE	CRIMP HEIGHT mm [INCH]	CRIMP HEIGHT REFERENCE SETTING 4
0.35mm2	0.85+/-0.05 [.033+/-.002]	8.7
0.30mm2	0.85+/-0.05 [.033+/-.002]	8.7
0.22mm2	0.75+/-0.05 [.030+/-.002]	9.7

*WARNING
ON INSTALLATION, SET WIRE DISC TO CRIMP HEIGHT REFERENCE SETTING FOR LARGEST WIRE SIZE. CRIMP HEIGHT REFERENCE SETTINGS GREATER THAN THE VALUE SHOWN MAY CAUSE DAMAGE TO THE CRIMP TOOLING, REFER TO THE INSTRUCTION SHEET FOR PROPER SETUP AND ADJUSTMENTS.

1. RECOMMENDED SPARE PARTS
2. REFER TO SUPPLIED INSTRUCTION SHEET FOR CLEANING, LUBRICATION AND STORAGE OF APPLICATOR.
3. APPLY PART NUMBER 1-23419-5 LOCTITE TO THREADS OF ITEMS 180. APPLY PART NUMBER 2-23419-6 LOCTITE TO THREADS OF ITEM 242.
4. CRIMP HEIGHT REFERENCE SETTING WAS THE SETTING USED WHEN THE APPLICATOR WAS QUALIFIED AT THE FACTORY. ADJUSTMENT MAY BE NECESSARY WHEN RUNNING APPLICATOR IN THE FIELD.
5. APPLY TORQ-SEAL IN ALLEN SOCKET TO FILL HOLE AFTER FLAT HD HAS BEEN ADJUSTED TO CORRECT HEIGHT AT QUALIFICATION. APPLY #1-23419-5 LOC-TITE TO THREADS.
6. THIS CRIMP PARAMETER IS PROVIDED TO MEET A CUSTOM AND UNIQUE CUSTOMER REQUIREMENT. IT HAS BEEN EVALUATED AND IS CONDITIONALLY SPECIFIED BY TE CONNECTIVITY. THIS CUSTOMIZED CRIMP PARAMETER IS NOT LISTED AS AN APPROVED APPLICATION WITHIN THE TERMINAL MANUFACTURER'S SPECIFICATIONS. **TE CONNECTIVITY EXPRESSLY DISCLAIMS ANY AND ALL WARRANTIES THAT THE PRODUCT WILL PERFORM SIMILARLY TO VALIDATED AND APPROVED APPLICATIONS, AS STATED WITHIN THE MANUFACTURER'S APPLICATION SPECIFICATIONS, INCLUDING BUT NOT LIMITED TO IMPLIED WARRANTIES OF MERCHANTABILITY OR FITNESS FOR PARTICULAR PURPOSE.** AS SUCH, IT IS HIGHLY RECOMMENDED THAT THE CUSTOMER PERFORM FURTHER DETAILED EVALUATION TO ASSESS PRODUCT PERFORMANCE IN THE SPECIFIC APPLICATION AND OBTAIN APPROVAL FROM TERMINAL MANUFACTURER FOR THIS CUSTOM REQUIREMENT.
7. TERMINAL LUBRICANT IS RECOMMENDED.
8. UNLESS SPECIFIED OTHERWISE TORQUE VALUES SHALL BE USED PER DOCUMENT, 101-35000.

-77	-72	-71	-52	-51	-2	-1	PART NO	DESCRIPTION	ITEM NO
-	1	1	1	1	1	1	1-1803945-3	TONKER	300
-	1	1	1	1	1	1	22278-9	SPRING, COMPRESSION	299
-	2	2	2	2	2	2	4-18032-3	SCR, SET, FLT PNT, M3 X 6.0	298
-	1	1	1	1	1	1	1803944-1	SPACER, TONKER	297
-	-	-	1	1	-	-	2-1803583-1	APPLICATOR BASIC ASSEMBLY, SF	292
-	1	-	1	-	1	-	2119641-1	FEED CAM, AIR FEED	248
-	1	1	1	1	1	1	2119082-8	CAM, SNAIL, INSULATION ADJUSTMENT	244
-	1	1	1	1	1	1	2079764-1	WASHER, WAVE SPRING, CREST-TO-CREST	243
-	1	1	1	1	1	1	2119083-1	RETAINER, INSULATION DIAL	242
-	1	1	1	1	1	1	7-18023-7	SCR, SKT HD CAP M3 X 4.0	241
-	-	1	-	1	-	1	2119580-1	MECHANICAL FEED ASSEMBLY	239
-	1	-	1	-	1	-	2844940-1	AIR FEED MODULE	238
-	REF	REF	REF	REF	REF	REF	994970-2	COUNTER, MAGNETIC	164
-	1	1	1	1	1	1	2119955-1	ASSY, LUBRICATOR, SIDE FEED	113
-	1	1	1	1	1	1	2844908-1	SCREW, LOCKING	99
-	1	1	1	1	1	1	2844907-1	POST, LOCKING	98
-	1	1	1	1	1	1	455888-5	SPACER, CRIMPER	82
-	1	1	1	1	1	1	1803607-3	DOCUMENTATION PACKAGE	71
-	1	1	1	1	1	1	2119740-1	TAG,IDENTIFICATION	67
-	2	2	2	2	2	2	2168078-1	SCREW, DRIVE, RH, RoHS, 2 x .188	66
-	1	1	1	1	1	1	2168083-2	SCR, SKT HD CAP, RoHS, M4 X 8.0	60
-	1	1	1	1	1	1	5-18022-5	SCR, HEX HD CAP, M4 X 6.0	59
-	1	1	1	1	1	1	985575-3	SCR, FLT SKT HD CAP M3 X 10.0	57
-	1	1	1	1	1	1	1338685-1	PAWL, FEED	56
-	4	4	4	4	4	4	2168083-3	SCR, SKT HD CAP, RoHS, M4 X 12.0	54
-	2	2	2	2	2	2	2168083-3	SCR, SKT HD CAP, RoHS, M4 X 12.0	53
-	1	2	1	2	1	2	18023-9	SCR, SKT HD CAP M4 X 6.0	49
-	-	1	-	1	-	1	2119652-1	FEED CAM, PRE FEED	48
-	-	1	-	1	-	1	2119653-1	FEED CAM, POST FEED	47
-	1	1	-	-	1	1	1803583-9	APPLICATOR BASIC ASSEMBLY, SF	46
-	1	1	1	1	1	1	1803515-1	RAM ASSEMBLY, SF ATLANTIC	44
-	1	1	1	1	1	1	1803602-1	SCR, BHSC, RoHS (M8 X 25)	41
-	1	1	1	1	1	1	1752356-6	SUPPORT, TERMINAL	34
-	2	2	2	2	2	2	2079383-5	SCR, BHSC, RoHS (M4 X 20)	33
-	2	2	2	2	2	2	2-2844962-6	SPACER, CYLINDRICAL, STRIP GUIDE	30
-	1	1	1	1	1	1	2844992-1	ASSEMBLY, STRIP GUIDE	29
-	1	1	1	1	1	1	1-455888-0	SPACER, CRIMPER	28
-	1	1	1	1	1	1	1320928-2	STRIP GUIDE	24
-	1	1	-	-	1	1	2168083-2	SCR, SKT HD CAP, RoHS, M4 X 8.0	21
-	2	2	1	1	2	2	1-18028-2	WASHER, FLAT, REG M4	20
-	1	1	-	-	1	1	2119533-1	STRIPPER, SIDE FEED	19
-	1	1	1	1	1	1	2119806-1	INSERT, SHEAR	13
-	1	1	1	1	1	1	3-22280-3	SPRING, COMPRESSION	12
-	1	1	1	1	1	1	1-356885-4	STOP, SHEAR	11
-	1	1	1	1	1	1	2119805-1	SHEAR HOLDER, FRONT	10
-	1	1	1	1	1	1	318707-1	FLOATING SHEAR, FRONT	9
1	2	2	1	1	1	1	1-1633927-1	ANVIL, COMBINATION	8
-	1	1	1	1	1	1	1-240641-9	SPACER	7
-	-	-	-	-	-	-	-	-	6
-	1	1	1	1	1	1	2-2119781-0	DEPRESSOR, SHEAR	5
-	1	1	1	1	1	1	2-238011-2	BLOCK, CRIMPER SPACER	4
1	2	2	1	1	1	1	1-2119784-9	CRIMPER, INSULATION O PREMIUM	3
-	1	1	1	1	1	1	455888-4	SPACER, CRIMPER	2
1	2	2	1	1	1	1	3-1673600-9	CRIMPER, WIRE	1

ATLANTIC VERSION
Shown on sheets 1 of 4 & 2 of 4
(Pacific version shown on sheets 3 of 4 & 4 of 4)

THIS DRAWING IS A CONTROLLED DOCUMENT FOR TYCO ELECTRONICS CORPORATION. IT IS SUBJECT TO CHANGE WITHOUT NOTICE. ALL REVISIONS TO THIS DRAWING SHOULD BE CONTACTED FOR THE LATEST REVISION.

DIMENSIONS: mm

TOLERANCES UNLESS OTHERWISE SPECIFIED:
0 PLC ±-
1 PLC ±-
2 PLC ±-
3 PLC ±-
4 PLC ±-
ANGLES ±-

MATERIAL -
FINISH -

DWN Y YIN 27MAR2012
CHK G BAILEY 27MAR2012
APVD S XI 27MAR2012
PRODUCT SPEC -
APPLICATION SPEC -
WEIGHT -

TE Connectivity
Harrisburg, PA 17105-3608

NAME Ocean Side Feed Applicator -

SIZE	CAGE CODE	DRAWING NO	RESTRICTED TO
A1	00779	C-2151632	-

Customer Accessible Production Drawing SCALE 1:2 SHEET 1 OF 4 REV H

AMP 4805 REV 31MAR2000

SHEETS 3 & 4 ARE NOT REQUIRED FOR ATLANTIC VERSION

THIS DRAWING IS UNPUBLISHED. RELEASED FOR PUBLICATION 20
© COPYRIGHT 20 BY TYCO ELECTRONICS CORPORATION. ALL RIGHTS RESERVED.

LOC	DIST
A	66

REVISIONS

P	LTR	DESCRIPTION	DATE	DWN	APVD
	-	SEE SHEET 1	-	-	-

FEED TYPE MECHANICAL

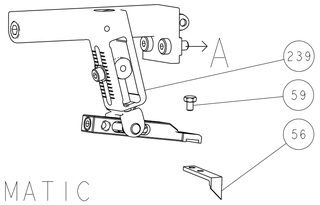

PNEUMATIC

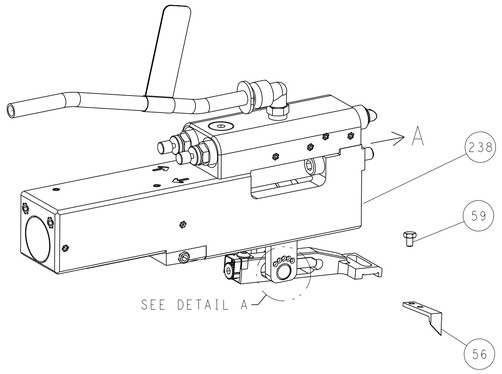

FEED SPRING SETTING POSITION
(SHOWN FROM REAR SIDE)

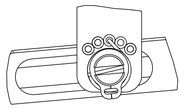

DETAIL A

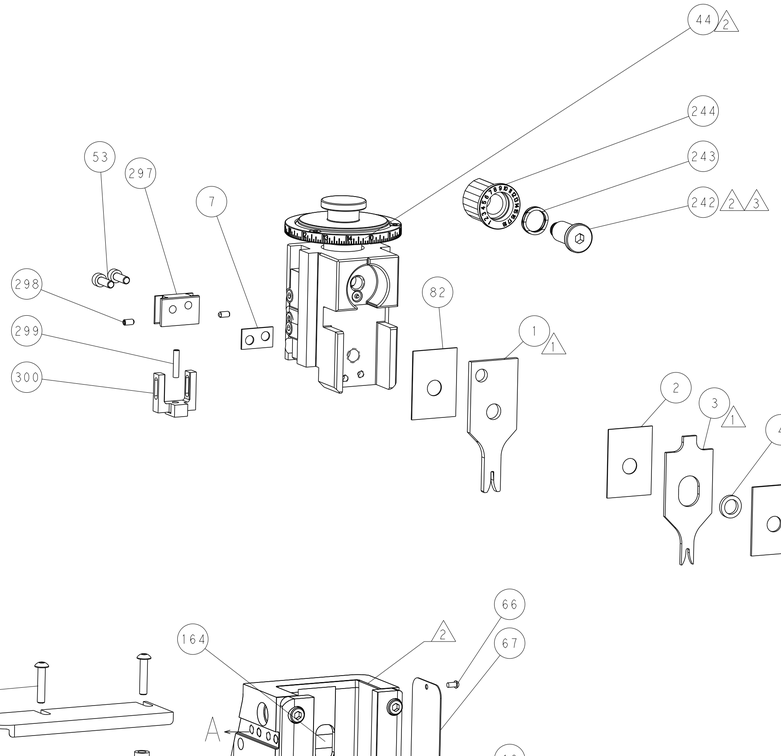

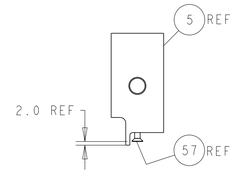

SHEAR DEPRESSOR DETAIL

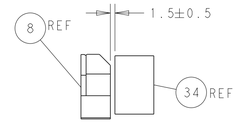

TERMINAL SUPPORT LOCATION

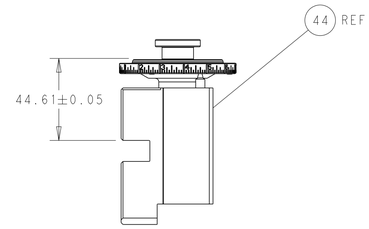

RAM AND HOLDDOWN SET-UP

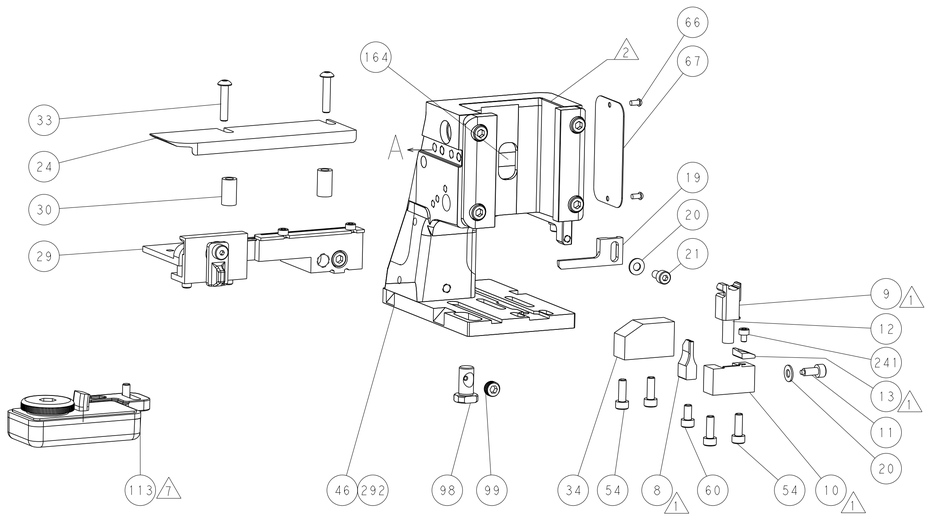

ITEM 30 LOCATED AT
FRONT HOLES

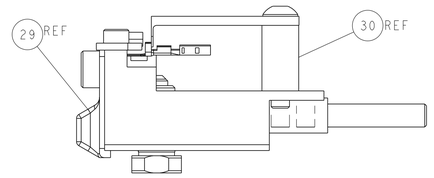

FEED TRACK POSITION
GUIDE BY INSULATION BARREL

CAM POSITIONS

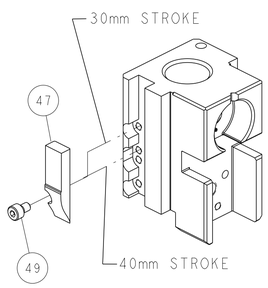

MECHANICAL
POST FEED

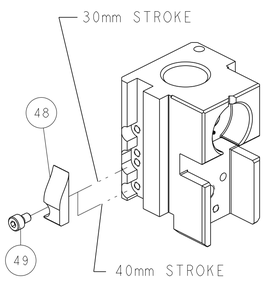

MECHANICAL
PRE FEED

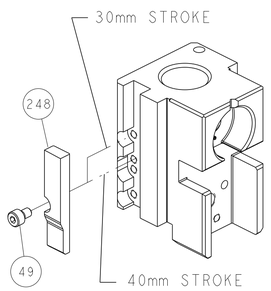

AIR FEED

ATLANTIC VERSION

Shown on sheets 1 of 4 & 2 of 4
(Pacific version shown on sheets 3 of 4 & 4 of 4)

THIS DRAWING IS A CONTROLLED DOCUMENT FOR TYCO ELECTRONICS CORPORATION IT IS SUBJECT TO CHANGE AND THE CONTROLLING ENGINEERING ORGANIZATION SHOULD BE CONTACTED FOR THE LATEST REVISION.

DWN Y.YIN	27MAR2012	TE Connectivity, Harrisburg, PA 17105-3608
CHK G.BAILEY	27MAR2012	
APVD S.XI	27MAR2012	NAME: Ocean Side Feed Applicator -
PRODUCT SPEC -		
APPLICATION SPEC -		SIZE A1 · CAGE CODE 00779 · DRAWING NO C-2151632 · RESTRICTED TO -
WEIGHT -		Customer Accessible Production Drawing · SCALE 1:2 · SHEET 2 OF 4 · REV H

DIMENSIONS: mm

TOLERANCES UNLESS OTHERWISE SPECIFIED:
0 PLC ±-
1 PLC ±-
2 PLC ±-
3 PLC ±-
4 PLC ±-
ANGLES ±-

MATERIAL - -
FINISH - -

SHEETS 3 & 4 ARE NOT REQUIRED FOR ATLANTIC VERSION

THIS DRAWING IS UNPUBLISHED. RELEASED FOR PUBLICATION 20
© COPYRIGHT 20 BY TYCO ELECTRONICS CORPORATION. ALL RIGHTS RESERVED.

LOC	DIST
A	66

REVISIONS

P	LTR	DESCRIPTION	DATE	DWN	APVD
	-	SEE SHEET 1	-	-	-

PART NUMBER	REVISION	DESCRIPTION	FEED TYPE
2-2151632-1	H	FINE CRIMP HEIGHT ADJUST	MECHANICAL
2-2151632-2	H	FINE CRIMP HEIGHT ADJUST	PNEUMATIC
7-2151632-7	A	CRIMP TOOLING KIT	-

PACIFIC VERSION TERMINATOR INTERFACE ADAPTER

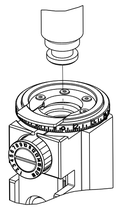

APPLICATOR DATA		
CRIMP	SIZE	TYPE
WIRE	1.30 mm [.051]	F
INSUL	2.03 mm [.080]	O
APPLICATOR INSTRUCTIONS 408-35042		

TERMINAL DATA: YAZAKI TERMINAL	YAZAKI CRIMP SPECIFICATION
TERMINAL NAME: RH TYPE TERMINAL FEMALE	
WIRE STRIP LENGTH 3.64-3.66 mm [.143-.144 IN]	INSULATION DIAMETER RANGE ∅0.91-1.90 mm [.036-.075 IN]
TERMINAL APPLICATION SPECIFICATION 7116-4415-02 Rev WA1851	- -
- -	-

TERMINALS APPLIED 7

TE TERMINAL	YAZAKI TERMINAL	TE SEAL	YAZAKI SEAL	CABLE DIAMETER
1572428-1	7116-4415-02	1949745-1	7158-3167-80	6
1572428-2	7116-4415-08	2113279-1	7158-3166-60	∅1.15-1.50
1572428-3	7116-4487-08	1949841-1	7158-3165-90	∅0.9-1.25
1572429-1	7114-4415-02			

WIRE SIZE	CRIMP HEIGHT mm [INCH]	CRIMP HEIGHT REFERENCE SETTING 4
0.35mm2	0.85+/-0.05 [.033+/-.002]	8.7
0.30mm2	0.85+/-0.05 [.033+/-.002]	8.7
0.22mm2	0.75+/-0.05 [.030+/-.002]	9.7

*WARNING
ON INSTALLATION, SET WIRE DISC TO CRIMP HEIGHT REFERENCE SETTING FOR LARGEST WIRE SIZE. CRIMP HEIGHT REFERENCE SETTINGS GREATER THAN THE VALUE SHOWN MAY CAUSE DAMAGE TO THE CRIMP TOOLING, REFER TO THE INSTRUCTION SHEET FOR PROPER SETUP AND ADJUSTMENTS.

1. RECOMMENDED SPARE PARTS
2. REFER TO SUPPLIED INSTRUCTION SHEET FOR CLEANING, LUBRICATION AND STORAGE OF APPLICATOR.
3. APPLY PART NUMBER 2-23419-6 LOCTITE TO THREADS OF ITEM 242.
4. CRIMP HEIGHT REFERENCE SETTING WAS THE SETTING USED WHEN THE APPLICATOR WAS QUALIFIED AT THE FACTORY. ADJUSTMENT MAY BE NECESSARY WHEN RUNNING APPLICATOR IN THE FIELD.
5. APPLY TORQ-SEAL IN ALLEN SOCKET TO FILL HOLE AFTER FLAT HD HAS BEEN ADJUSTED TO CORRECT HEIGHT AT QUALIFICATION. APPLY #1-23419-5 LOC-TITE TO THREADS.
6. THIS CRIMP PARAMETER IS PROVIDED TO MEET A CUSTOM AND UNIQUE CUSTOMER REQUIREMENT. IT HAS BEEN EVALUATED AND IS CONDITIONALLY SPECIFIED BY TE CONNECTIVITY. THIS CUSTOMIZED CRIMP PARAMETER IS NOT LISTED AS AN APPROVED APPLICATION WITHIN THE TERMINAL MANUFACTURER'S SPECIFICATIONS. **TE CONNECTIVITY EXPRESSLY DISCLAIMS ANY AND ALL WARRANTIES THAT THE PRODUCT WILL PERFORM SIMILARLY TO VALIDATED AND APPROVED APPLICATIONS, AS STATED WITHIN THE MANUFACTURER'S APPLICATION SPECIFICATIONS, INCLUDING BUT NOT LIMITED TO IMPLIED WARRANTIES OF MERCHANTABILITY OR FITNESS FOR PARTICULAR PURPOSE.** AS SUCH, IT IS HIGHLY RECOMMENDED THAT THE CUSTOMER PERFORM FURTHER DETAILED EVALUATION TO ASSESS PRODUCT PERFORMANCE IN THE SPECIFIC APPLICATION AND OBTAIN APPROVAL FROM TERMINAL MANUFACTURER FOR THIS CUSTOM REQUIREMENT.
7. TERMINAL LUBRICANT IS RECOMMENDED.
8. UNLESS SPECIFIED OTHERWISE TORQUE VALUES SHALL BE USED PER DOCUMENT, 101-35000.

-77	-22	-21	PART NO	DESCRIPTION	ITEM NO
-	1	1	1-1803945-3	TONKER	300
-	1	1	22278-9	SPRING, COMPRESSION	299
-	2	2	4-18032-3	SCR, SET, FLT PNT, M3 X 6.0	298
-	1	1	1803944-1	SPACER, TONKER	297
-	1	1	2119082-8	CAM, SNAIL, INSULATION ADJUSTMENT	244
-	1	1	2079764-1	WASHER, WAVE SPRING, CREST-TO-CREST	243
3 -	1	1	2119083-1	RETAINER, INSULATION DIAL	242
-	1	1	7-18023-7	SCR, SKT HD CAP M3 X 4.0	241
-	-	1	2119580-1	MECHANICAL FEED ASSEMBLY	239
-	1	-	2844940-1	AIR FEED MODULE	238
-	REF	REF	994970-2	COUNTER, MAGNETIC	164
-	1	-	2119641-2	FEED CAM, AIR FEED	151
-	1	1	2168083-8	SCR, SKT HD CAP, RoHS, M4 X 16	144
-	4	4	2168083-9	SCR, SKT HD CAP, RoHS, M4 X 20	143
-	-	1	2119653-2	FEED CAM, POST FEED	142
-	1	1	1-1803583-0	APPLICATOR BASIC ASSEMBLY, SF	141
-	1	1	1803516-1	RAM ASSEMBLY, SF PACIFIC	140
7 -	1	1	2119955-1	ASSY, LUBRICATOR, SIDE FEED	113
-	1	1	2844908-1	SCREW, LOCKING	99
-	1	1	2844907-1	POST, LOCKING	98
-	1	1	455888-5	SPACER, CRIMPER	82
-	1	1	1803607-3	DOCUMENTATION PACKAGE	71
-	1	1	2119740-1	TAG,IDENTIFICATION	67
-	2	2	2168078-1	SCREW, DRIVE, RH, RoHS, 2 x .188	66
-	1	1	5-18022-5	SCR, HEX HD CAP, M4 X 6.0	59
5 -	1	1	985575-3	SCR, FLT SKT HD CAP M3 X 10.0	57
-	1	1	1338685-1	PAWL, FEED	56
-	2	2	2168083-3	SCR, SKT HD CAP, RoHS, M4 X 12.0	53
-	1	2	18023-9	SCR, SKT HD CAP M4 X 6.0	49
-	-	1	2119652-1	FEED CAM, PRE FEED	48
-	1	1	1803602-1	SCR, BHSC, RoHS (M8 X 25)	41
-	1	1	1752356-6	SUPPORT, TERMINAL	34
-	2	2	2079383-5	SCR, BHSC, RoHS (M4 X 20)	33
-	2	2	2-2844962-6	SPACER, CYLINDRICAL, STRIP GUIDE	30
-	1	1	2844992-1	ASSEMBLY, STRIP GUIDE	29
-	1	1	1-455888-0	SPACER, CRIMPER	28
-	1	1	1320928-2	STRIP GUIDE	24
-	1	1	2168083-2	SCR, SKT HD CAP, RoHS, M4 X 8.0	21
-	2	2	1-18028-2	WASHER, FLAT, REG M4	20
-	1	1	2119533-1	STRIPPER, SIDE FEED	19
1 -	1	1	2119806-1	INSERT, SHEAR	13
-	1	1	3-22280-3	SPRING, COMPRESSION	12
-	1	1	1-356885-4	STOP, SHEAR	11
1 -	1	1	2119805-1	SHEAR HOLDER, FRONT	10
1 -	1	1	318707-1	FLOATING SHEAR, FRONT	9
1 1	1	1	1-1633927-1	ANVIL, COMBINATION	8
-	1	1	1-240641-9	SPACER	7
-	-	-	-	-	6
-	1	1	2-2119781-0	DEPRESSOR, SHEAR	5
-	1	1	2-238011-2	BLOCK, CRIMPER SPACER	4
1 1	1	1	1-2119784-9	CRIMPER, INSULATION O PREMIUM	3
-	1	1	455888-4	SPACER, CRIMPER	2
1 1	1	1	3-1673600-9	CRIMPER, WIRE	1

THIS DRAWING IS A CONTROLLED DOCUMENT FOR TYCO ELECTRONICS CORPORATION. IT IS SUBJECT TO CHANGE WITHOUT NOTICE. ALL REVISIONS TO THIS DRAWING SHOULD BE CONTACTED FOR THE LATEST REVISION.

DIMENSIONS: mm

TOLERANCES UNLESS OTHERWISE SPECIFIED:
0 PLC ±-
1 PLC ±-
2 PLC ±-
3 PLC ±-
4 PLC ±-
ANGLES ±-

MATERIAL - -
FINISH - -

DWN	Y. YIN	27MAR2012
CHK	G. BAILEY	27MAR2012
APVD	S. XI	27MAR2012
PRODUCT SPEC	-	
APPLICATION SPEC	-	
WEIGHT	-	

TE Connectivity
Harrisburg, PA 17105-3608

NAME: Ocean Side Feed Applicator -

SIZE	CAGE CODE	DRAWING NO	RESTRICTED TO
A1	00779	C-2151632	-

Customer Accessible Production Drawing | SCALE 1:2 | SHEET 3 OF 4 | REV H

PACIFIC VERSION

Shown on sheets 3 of 4 & 4 of 4
(Atlantic version shown on sheets 1 of 4 & 2 of 4)

SHEETS 1 & 2 ARE NOT REQUIRED FOR PACIFIC VERSION

THIS DRAWING IS UNPUBLISHED. RELEASED FOR PUBLICATION 20
© COPYRIGHT 20 BY TYCO ELECTRONICS CORPORATION. ALL RIGHTS RESERVED.

LOC	DIST
A	66

REVISIONS

P	LTR	DESCRIPTION	DATE	DWN	APVD
	-	SEE SHEET 1	-	-	-

FEED TYPE

MECHANICAL

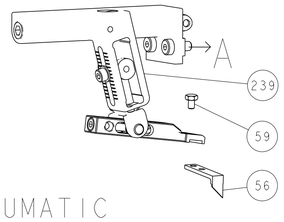

PNEUMATIC

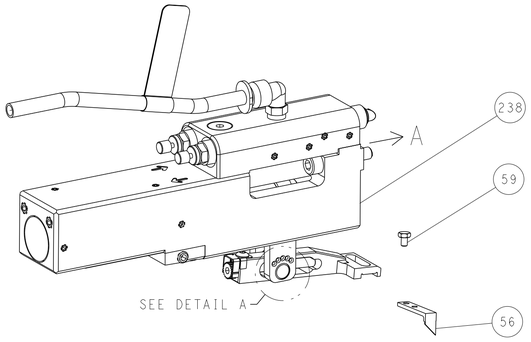

FEED SPRING SETTING POSITION
(SHOWN FROM REAR SIDE)

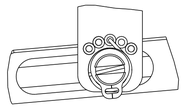

DETAIL A

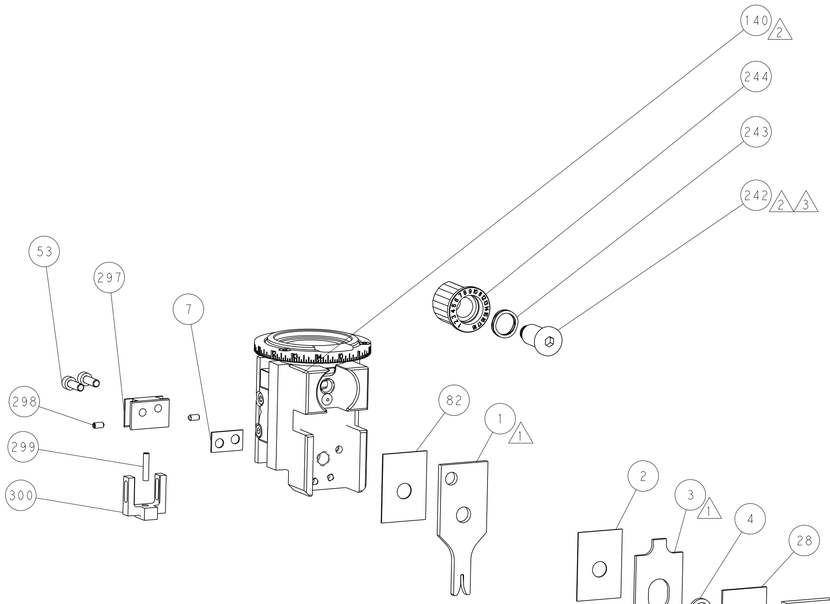

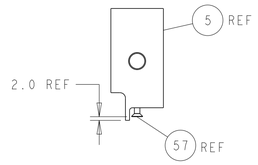

SHEAR DEPRESSOR DETAIL

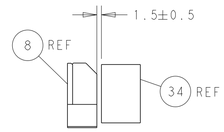

TERMINAL SUPPORT LOCATION

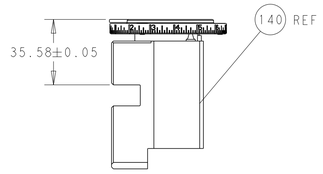

RAM SET-UP

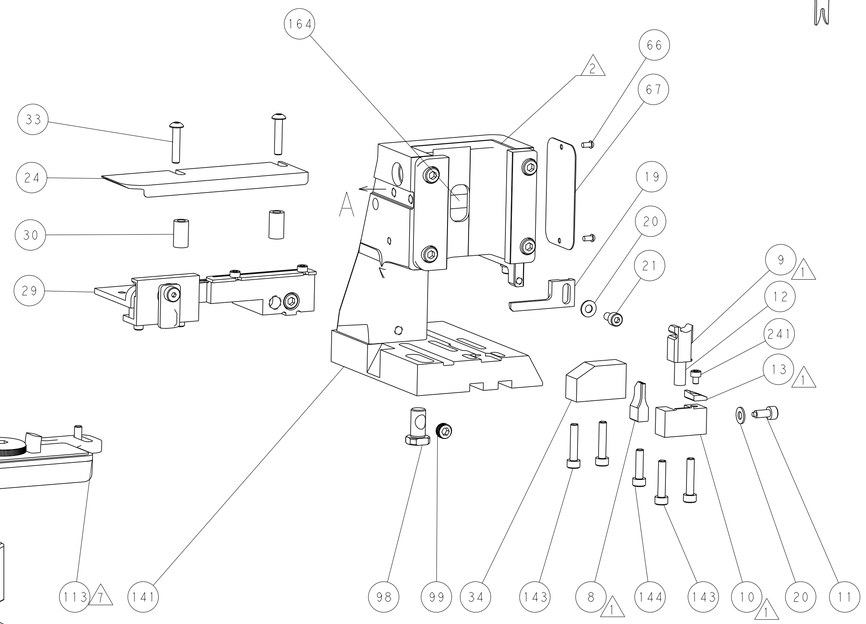

ITEM 30 LOCATED AT
FRONT HOLES

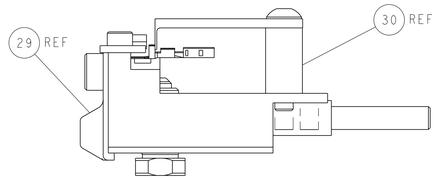

FEED TRACK POSITION
GUIDE BY INSULATION BARREL

CAM POSITIONS

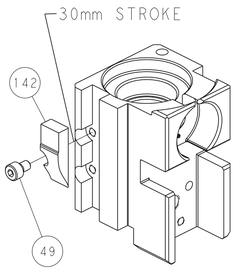

MECHANICAL
POST FEED

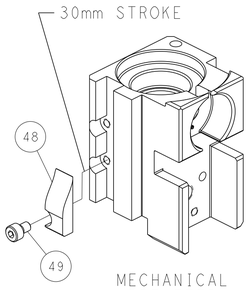

MECHANICAL
PRE FEED

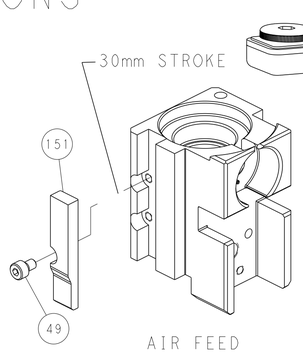

AIR FEED

PACIFIC VERSION

Shown on sheets 3 of 4 & 4 of 4
(Atlantic version shown on sheets 1 of 4 & 2 of 4)

THIS DRAWING IS A CONTROLLED DOCUMENT FOR TYCO ELECTRONICS CORPORATION. IT IS SUBJECT TO CHANGE AND THE CONTROLLING ENGINEERING ORGANIZATION SHOULD BE CONTACTED FOR THE LATEST REVISION.

DWN Y.YIN	27MAR2012	TE Connectivity Harrisburg, PA 17105-3608
CHK G.BAILEY	27MAR2012	
APVD S.XI	27MAR2012	NAME Ocean Side Feed Applicator -
PRODUCT SPEC -		
APPLICATION SPEC -		
WEIGHT -		SIZE A1 · CAGE CODE 00779 · DRAWING NO C-2151632 · RESTRICTED TO -
Customer Accessible Production Drawing		SCALE 1:2 · SHEET 4 OF 4 · REV H

DIMENSIONS: mm

TOLERANCES UNLESS OTHERWISE SPECIFIED:
0 PLC ±-
1 PLC ±-
2 PLC ±-
3 PLC ±-
4 PLC ±-
ANGLES ±-

MATERIAL - -
FINISH - -

SHEETS 1 & 2 ARE NOT REQUIRED FOR PACIFIC VERSION