

CFSA69383P - Ceiling Tile



CFSA69383P1 - Hard Ceiling

CFSA69383P/ CFSA69383P1

Ultra-low Profile/Low PIM Ceiling Mount Antenna 698-960 MHz/1350-1550 MHz/1690-4000 MHz

The CFSA69383P/CFSA69383P1 is a Low PIM indoor wideband omnidirectional low-profile ceiling mount antenna. It is designed to provide pattern coverage that is optimized for indoor coverage requirements at 698-960 MHz and 1690-3800 MHz for the GSM, DCS, UMTS, AWS-3 and LTE/WiMAX frequency bands.

The CFSA69383P/CFSA69383P1 is applicable for environments where aesthetics and wide-angle coverage are necessary for successful wireless deployment. The surprisingly small size and extreme low profile enables maximum mounting flexibility while maintaining desired in-building aesthetics.

FEATURES AND BENEFITS

- Ultra-low profile
- Aesthetically-neutral housing
- Optimized performance using TE proprietary tools
- Supports AWS-3 frequency band
- Mounts directly and easily to ceiling tile (CFSA69383P1 is for hard ceiling mount installations)

APPLICATIONS

- FirstNet/Public Safety
- Small cells
- Meeting rooms
- Offices
- Hotels
- Museums
- iDAS
- Libraries
- Retails malls
- Bus terminals and train stations
- Other in-building areas

ELECTRICAL SPECIFICATION											
Operating Frequency (MHz)	698-806	824-894	880-890	1350-1550	1690-1880	1850-1990	1910-2180	2300-2500	2500-2700	3300-3800	3800-4000
VSWR – Avg	<1.2:1	<1.2:1	<1.2:1	<1.6:1	<1.3:1	<1.3:1	<1.3:1	<1.2:1	<1.2:1	<1.6:1	<1.7:1
VSWR – Max	<1.5:1	<1.5:1	<1.5:1	<2.0:1	<1.5:1	<1.5:1	<1.5:1	<1.5:1	<1.5:1	<1.8:1	<2.0:1
Gain – Typ (dBi)	3.2	2.6	3.4	4.2	4.0	4.4	4.2	4.3	5.4	2.4	3.0
Gain – Max (dBi)	3.5	3.1	4.1	5.6	4.3	4.7	4.7	5.1	5.8	3.0	3.2
PIM - 2x20W – Avg (dBc)	< -159 (LTE low band)				< -157 (LTE high band)			< -160			
PIM - 2x20W – Max (dBc)	< -150 (LTE low band)				< -150 (LTE high band)			< -150			
Nominal Impedance (Ohms)	50										
Max Power - Ambient 25°C (W)	50										
Polarization	Linear Horizontal										
Azimuth 3 dB Beamwidth	360°										

MECHANICAL SPECIFICATIONS	
Dimensions – height x diameter – mm (in.)	7.6 x 180 (0.3 x 7.1)
Weight – g (lbs.)	0.23 (0.5)
Antenna Color	White
Radome Material	PC, UL94-V0

ENVIRONMENTAL SPECIFICATIONS	
Operating Environment (Indoor or Outdoor)	Indoor
Operating Temperature – C° (F°)	-30 to +70 (-22 to +158)
Storage Temperature – C° (F°)	-40 to +85 (-40 to +185)
Material Substance Compliance	RoHS

CONFIGURATION

PART NUMBER	CABLE LENGTH	CONNECTOR	MOUNTING	PACKAGING
CFSA69383P-30NF	30 cm (12 in.)	Type N-female	Ceiling tile	Unit
CFSA69383P-30D43F	30 cm (12 in.)	4.3-10 female	Ceiling tile	Unit
CFSA69383P-B30NF	30 cm (12 in.)	Type N-female	Ceiling tile	Bulk
CFSA69383P-B30D43F	30 cm (12 in.)	4.3-10 female	Ceiling tile	Bulk
CFSA69383P1-30NF	30 cm (12 in.)	Type N-female	Hard ceiling	Unit
CFSA69383P1-30D43F	30 cm (12 in.)	4.3-10 female	Hard ceiling	Unit
CFSA69383P1-B30NF	30 cm (12 in.)	Type N-female	Hard ceiling	Bulk
CFSA69383P1-B30D3F	30 cm (12 in.)	4.3-10 female	Hard ceiling	Bulk

MECHANICAL DRAWING

CFSA69383P - Ceiling Tile

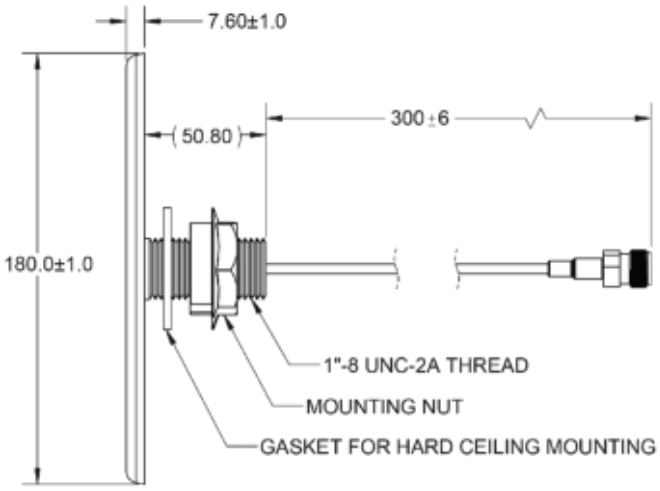

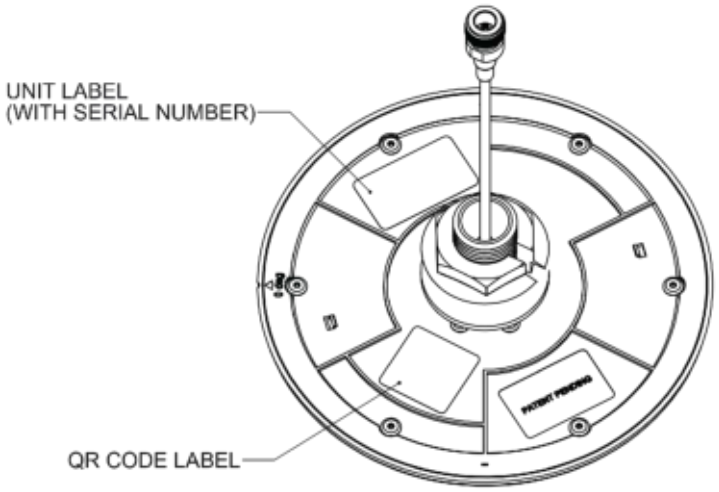

CFSA69383P1 - Hard Ceiling

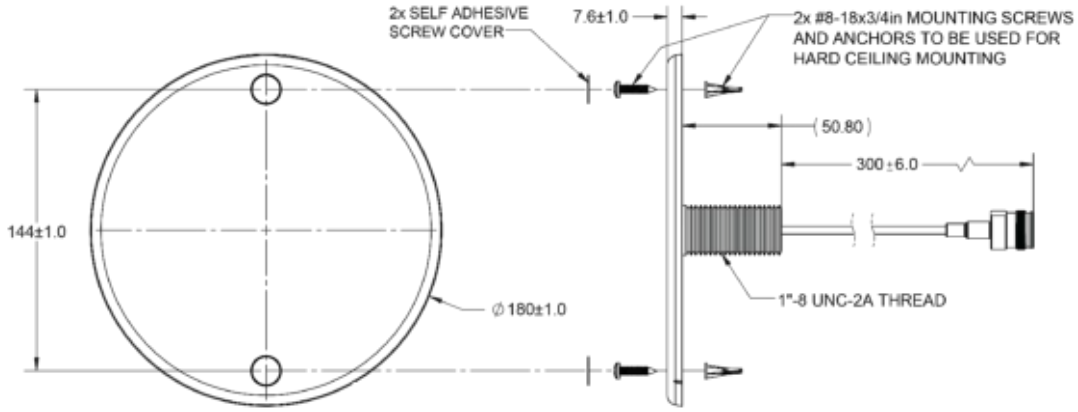

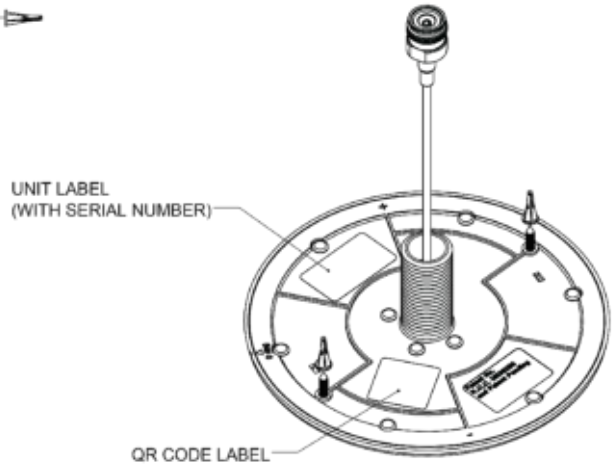

RADIATION PATTERNS

698 MHz

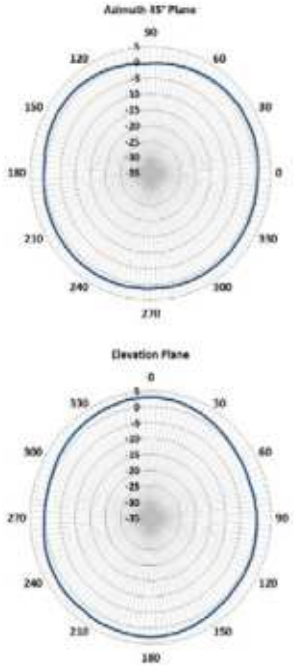

806 MHz

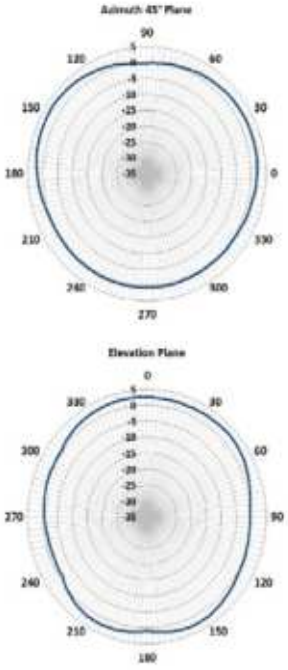

960 MHz

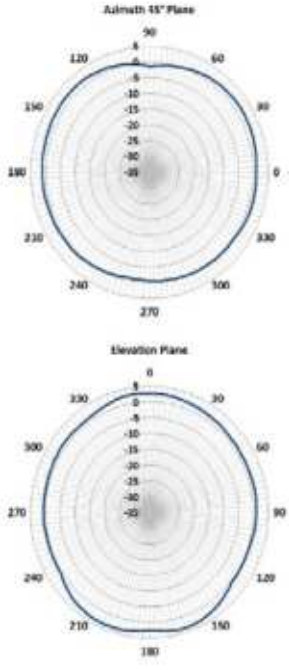

1427 MHz

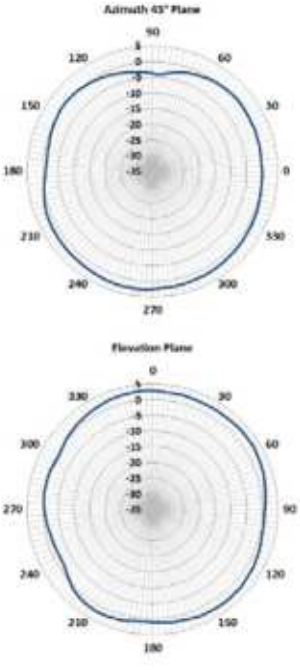

1710 MHz

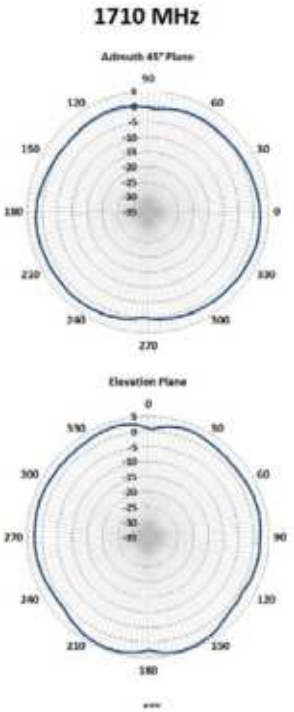

1880 MHz

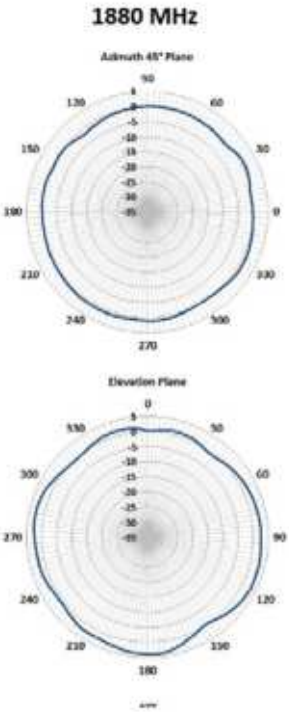

1990 MHz

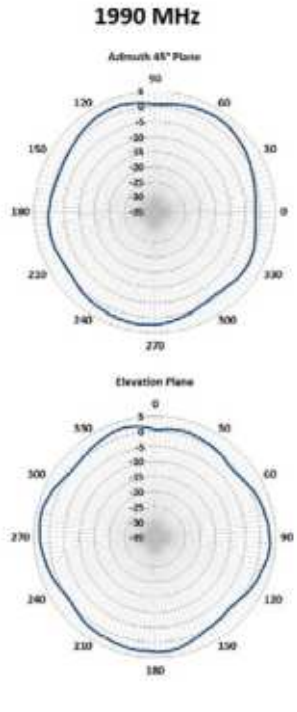

2180 MHz

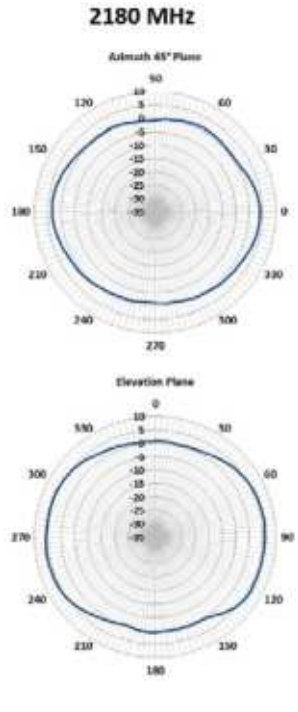

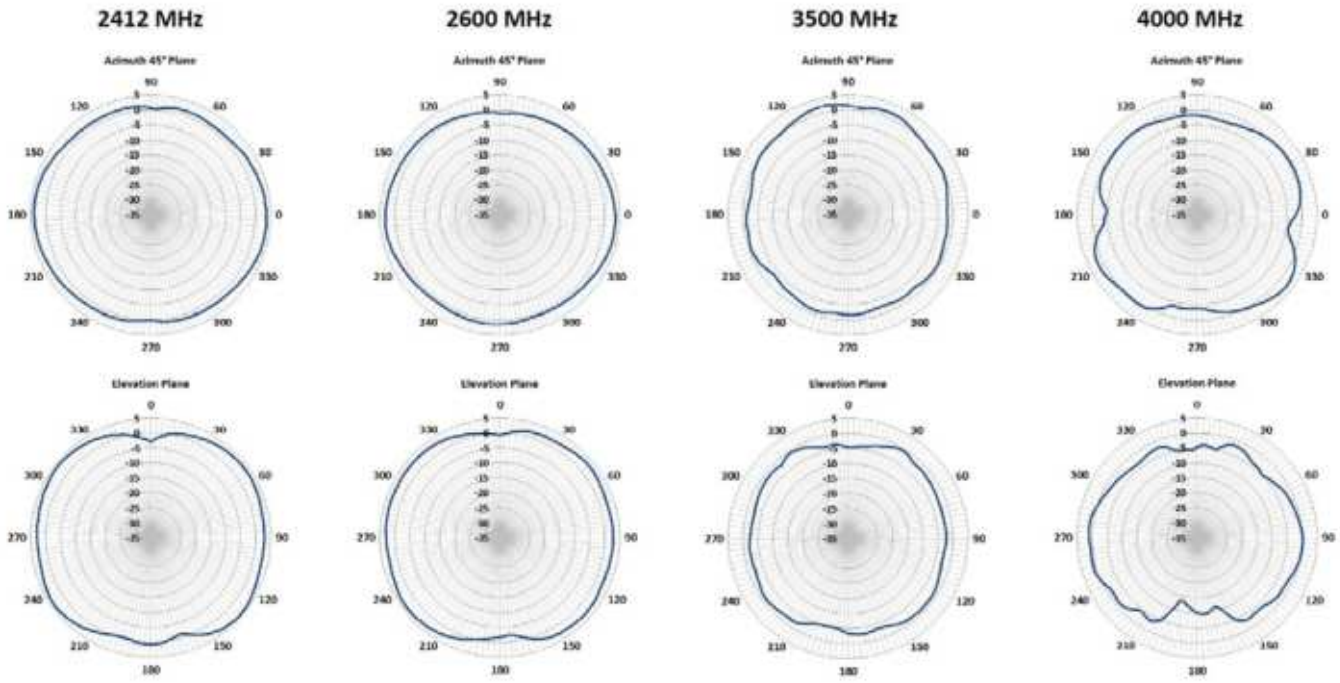

TE TECHNICAL SUPPORT CENTER

USA:	+1 (800) 522-6752
Canada:	+1 (905) 475-6222
Mexico:	+52 (0) 55-1106-0800
Latin/S. America:	+54 (0) 11-4733-2200
Germany:	+49 (0) 6251-133-1999
UK:	+44 (0) 800-267666
France:	+33 (0) 1-3420-8686
Netherlands:	+31 (0) 73-6246-999
China:	+86 (0) 400-820-6015

te.com

TE, TE Connectivity, TE connectivity (logo), and EVERY CONNECTION COUNTS are trademarks owned or licensed by the TE Connectivity plc family of companies. Other product names, logos, and company names mentioned herein may be trademarks of their respective owners.

While TE has made every reasonable effort to ensure the accuracy of the information in this document, TE does not guarantee that it is error-free, nor does TE make any other representation, warranty or guarantee that the information is accurate, complete, correct, reliable or current. TE reserves the right to make any adjustments to the information contained herein at any time without notice. TE EXPRESSLY DISCLAIMS ALL IMPLIED WARRANTIES REGARDING THE INFORMATION CONTAINED HEREIN, INCLUDING, BUT NOT LIMITED TO, ANY IMPLIED WARRANTIES OF MERCHANTABILITY OR FITNESS FOR A PARTICULAR PURPOSE. In no event will TE be liable for any direct, indirect, incidental, special or consequential damages arising from or related to recipient's use of the information. It is the sole responsibility of recipient of this information to verify the results of this information using their engineering and product environment. Recipient assumes any and all risks associated with the use of the information. Antenna performance may vary. TE is a component manufacturer, and customer and/or end-user is responsible for all end-use compliance and regulatory requirements.

©2025 TE Connectivity. All Rights Reserved.

05/25 Original