flex

Technical Specification

PKU 4000C Series DC-DC Converters Input 36-75 V, Output up to 20 A / 100 W	EN/LZT 146 447 R2A November 2017 © Flex

Key Features

- Industry standard Sixteenth-brick
  33.0 x 22.9 x 8.5 mm (1.3 x 0.9 x 0.334 in.)
- High efficiency, typ. 92.7% at 12 Vout 50 % load
- 1500 Vdc input to output isolation
- Meets safety requirements according to IEC/EN/UL 60950
- MTBF 4.27 Mh

General Characteristics

- Fully regulated
- Input under voltage protection
- Pre-bias start up
- Over temperature protection
- Output over voltage protection
- Output short circuit protection
- Remote control
- Highly automated manufacturing ensures quality
- ISO 9001/14001 certified supplier

Safety Approvals

Design for Environment

RoHS compliant

Meets requirements in high-temperature lead-free soldering processes.

Contents

Ordering Information 2
General Information 2
Safety Specification 3
Absolute Maximum Ratings 4

Electrical Specification
5 V, 20 A / 100 W PKU 4105C PI 5
12 V, 8.3 A / 100 W PKU 4104C PI 8

EMC Specification 11
Operating Information 12
Thermal Consideration 14
Connections 15
Mechanical Information 16
Soldering Information 18
Delivery Information 19
Product Qualification Specification 20

Ordering Information

Product program	Output
PKU 4104C PI	12 V, 8.3 A / 100 W
PKU 4105C PI	5 V, 20 A / 100 W

Product number and Packaging

PKU 4104C n_1 n_2 n_3 n_4				
Options	n_1	n_2	n_3	n_4
Mounting	x			
Remote Control logic		x		
Lead length			x	
Delivery package information				x

Options	Description	
n_1	PI	Through hole
	SI	Surface mount
n_2		Negative *
	P	Positive
n_3		5.30 mm *
	LA	3.69 mm (pin-cut)
	LB	4.57 mm (pin-cut)
	LC	2.79 mm (pin-cut)
n_4	/B	Tray
	/C	Tape and Reel

Example a through-hole mounted, positive logic, short pin product with tray packaging would be PKU 4104C PIPLA/B.

* Standard variant (i.e. no option selected).

General Information

Reliability

The failure rate (λ) and mean time between failures (MTBF= $1/\lambda$) is calculated at max output power and an operating ambient temperature (T_A) of +40°C. Flex Power Modules uses Telcordia SR-332 Issue 2 Method 1 to calculate the mean steady-state failure rate and standard deviation (σ).

Telcordia SR-332 Issue 2 also provides techniques to estimate the upper confidence levels of failure rates based on the mean and standard deviation.

Mean steady-state failure rate, λ	Std. deviation, σ
234 nFailures/h	22 nFailures/h

MTBF (mean value) for the PKU 4000 series = 4.27 Mh.
MTBF at 90% confidence level = 3.8 Mh

Compatibility with RoHS requirements

The products are compatible with the relevant clauses and requirements of the RoHS directive 2011/65/EU and have a maximum concentration value of 0.1% by weight in homogeneous materials for lead, mercury, hexavalent chromium, PBB and PBDE and of 0.01% by weight in homogeneous materials for cadmium.

Exemptions in the RoHS directive utilized in Flex Power Modules products are found in the Statement of Compliance document.

Flex Power Modules fulfills and will continuously fulfill all its obligations under regulation (EC) No 1907/2006 concerning the registration, evaluation, authorization and restriction of chemicals (REACH) as they enter into force and is through product materials declarations preparing for the obligations to communicate information on substances in the products.

Quality Statement

The products are designed and manufactured in an industrial environment where quality systems and methods like ISO 9000, Six Sigma, and SPC are intensively in use to boost the continuous improvements strategy. Infant mortality or early failures in the products are screened out and they are subjected to an ATE-based final test. Conservative design rules, design reviews and product qualifications, plus the high competence of an engaged work force, contribute to the high quality of the products.

Warranty

Warranty period and conditions are defined in Flex Power Modules General Terms and Conditions of Sale.

Limitation of Liability

Flex Power Modules does not make any other warranties, expressed or implied including any warranty of merchantability or fitness for a particular purpose (including, but not limited to, use in life support applications, where malfunctions of product can cause injury to a person's health or life).

© Flex 2017

The information and specifications in this technical specification is believed to be correct at the time of publication. However, no liability is accepted for inaccuracies, printing errors or for any consequences thereof. Flex reserves the right to change the contents of this technical specification at any time without prior notice.

Safety Specification

General information
Flex Power Modules DC/DC converters and DC/DC regulators are designed in accordance with safety standards IEC/EN/UL60950, *Safety of Information Technology Equipment*.

IEC/EN/UL60950 contains requirements to prevent injury or damage due to the following hazards:

- Electrical shock
- Energy hazards
- Fire
- Mechanical and heat hazards
- Radiation hazards
- Chemical hazards

On-board DC-DC converters and DC/DC regulators are defined as component power supplies. As components they cannot fully comply with the provisions of any Safety requirements without “Conditions of Acceptability”. Clearance between conductors and between conductive parts of the component power supply and conductors on the board in the final product must meet the applicable Safety requirements. Certain conditions of acceptability apply for component power supplies with limited stand-off (see Mechanical Information for further information). It is the responsibility of the installer to ensure that the final product housing these components complies with the requirements of all applicable Safety standards and Directives for the final product.

Component power supplies for general use should comply with the requirements in IEC/EN/UL 60950-1 *Safety of Information Technology Equipment.* Product related standards, e.g. IEEE 802.3af *Power over Ethernet*, and ETS-300132-2 *Power interface at the input to telecom equipment, operated by direct current (dc)* are based on IEC/EN/UL 60950-1 with regards to safety.

Flex Power Modules DC/DC converters, Power interface modules and DC/DC regulators are UL 60950-1 recognized and certified in accordance with EN 60950-1. The flammability rating for all construction parts of the products meet requirements for V-0 class material according to IEC 60695-11-10, *Fire hazard testing, test flames* – 50 W horizontal and vertical flame test methods.

Isolated DC/DC converters

The product may provide basic or functional insulation between input and output according to IEC/EN/UL 60950-1 (see Safety Certificate), different conditions shall be met if the output of a basic or a functional insulated product shall be considered as safety extra low voltage (SELV).

For basic insulated products (see Safety Certificate) the output is considered as safety extra low voltage (SELV) if one of the following conditions is met:

- The input source provides supplementary or double or reinforced insulation from the AC mains according to IEC/EN/UL 60950-1.
- The input source provides functional or basic insulation from the AC mains and the product’s output is reliably connected to protective earth according to IEC/EN/UL 60950-1.

For functional insulated products (see Safety Certificate) the output is considered as safety extra low voltage (SELV) if one of the following conditions is met:

- The input source provides double or reinforced insulation from the AC mains according to IEC/EN/UL 60950-1.
- The input source provides basic or supplementary insulation from the AC mains and the product’s output is reliably connected to protective earth according to IEC/EN/UL 60950-1.
- The input source is reliably connected to protective earth and provides basic or supplementary insulation according to IEC/EN/UL 60950-1 and the maximum input source voltage is 60 Vdc.

Galvanic isolation between input and output is verified in an electric strength test and the isolation voltage (V_{iso}) meets the voltage strength requirement for basic insulation according to IEC/EN/UL 60950-1.

It is recommended to use a slow blow fuse at the input of each DC/DC converter. If an input filter is used in the circuit the fuse should be placed in front of the input filter. In the rare event of a component problem that imposes a short circuit on the input source, this fuse will provide the following functions:

- Isolate the fault from the input power source so as not to affect the operation of other parts of the system
- Protect the distribution wiring from excessive current and power loss thus preventing hazardous overheating

© Flex

Absolute Maximum Ratings

Characteristics		min	typ	max	Unit
T_{ref}	Operating Temperature (see Thermal Consideration section)	-40		+125	°C
T_S	Storage temperature	-55		+125	°C
V_I	Input voltage	-0.5		+80	V
V_{iso}	Isolation voltage (input to output test voltage)			1500	Vdc
V_{tr}	Input voltage transient according to ETSI EN 300 132-2 and Telcordia GR-1089-CORE			100	V
V_{RC}	Remote Control pin voltage (see Operating Information section)	-0.5		10	V

Stress in excess of Absolute Maximum Ratings may cause permanent damage. Absolute Maximum Ratings, sometimes referred to as no destruction limits, are normally tested with one parameter at a time exceeding the limits of Output data or Electrical Characteristics. If exposed to stress above these limits, function and performance may degrade in an unspecified manner.

Fundamental Circuit Diagram

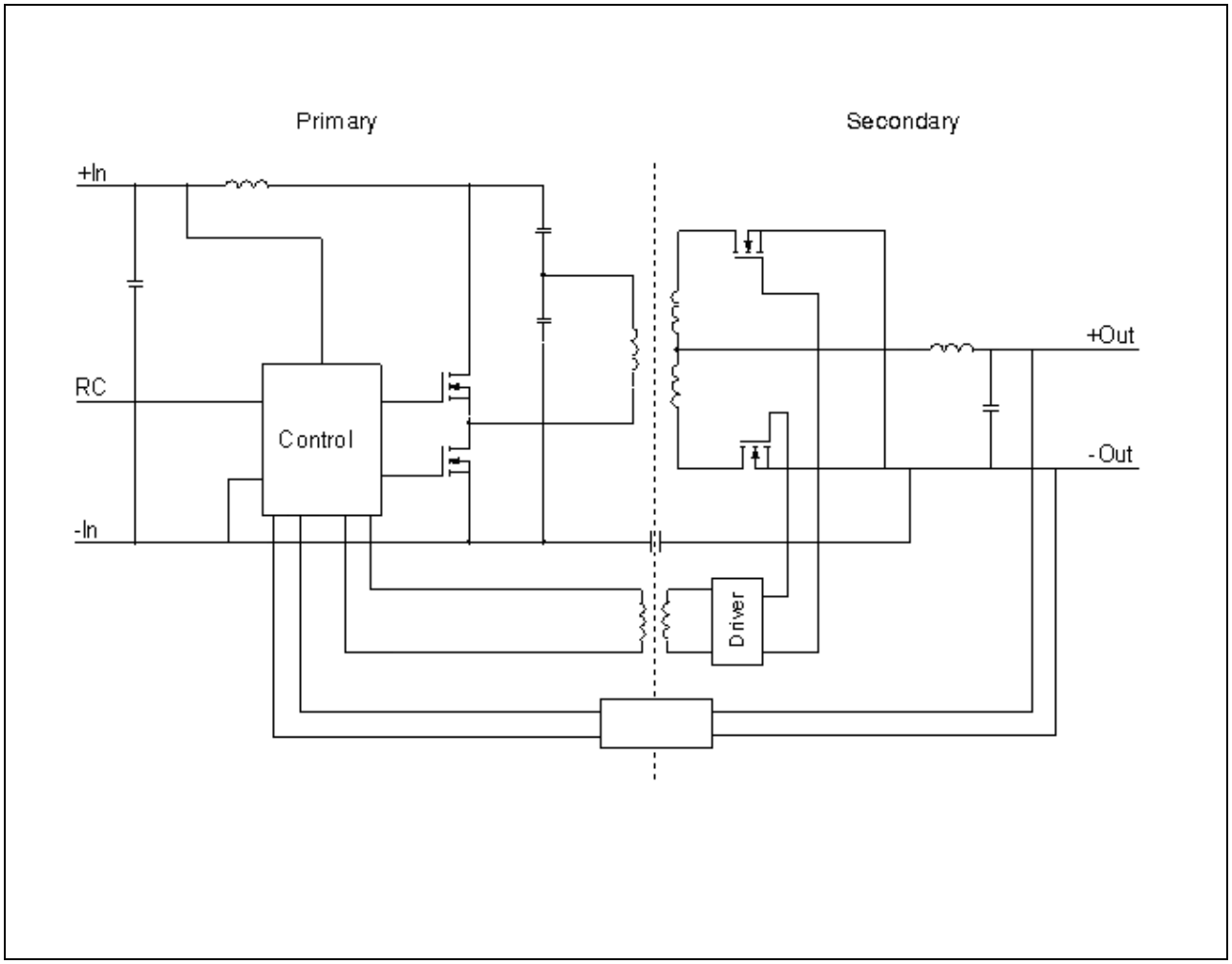

© Flex

5 V, 20 A / 100 W Electrical Specification

PKU 4105C PI

T_{ref} = -40 to +90ºC, V_I = 36 to 75 V, unless otherwise specified under Conditions.
Typical values given at: T_{ref} = +25°C, V_I= 53 V, max I_O, unless otherwise specified under Conditions.
C_{out} = 2000 µF, for details see note 1.

Characteristics		Conditions	min	typ	Max	Unit
V_I	Input voltage range		36		75	V
V_{Ioff}	Turn-off input voltage		29	30	32	V
V_{Ion}	Turn-on input voltage		30	32	35	V
C_I	Internal input capacitance			3.3		µF
P_O	Output power		0		100	W
η	Efficiency	50 % of max I_O		93.3		%
		max I_O		93.0		
		50 % of max I_O , V_I = 48 V		93.6		
		max I_O, V_I = 48 V		93.0		
P_d	Power Dissipation	max I_O		7.5	10	W
P_{li}	Input idling power	I_O = 0 A, V_I = 53 V		2		W
P_{RC}	Input standby power	V_I = 53 V (turned off with RC)		0.1		W
f_s	Switching frequency	0-100 % of max I_O		250		kHz

V_{Oi}	Output voltage initial setting and accuracy	T_{ref} = +25°C, V_I = 53 V, 50 % of max I_O	4.9	5.0	5.1	V
	Output voltage tolerance band	0-100 % of max I_O	4.8		5.2	V
	Idling voltage	I_O = 0 A		5.0		V
	Line regulation	max I_O , see note 2		6	30	mV
	Load regulation	V_I = 53 V, 0-100 % of max I_O		12	30	mV
V_{tr}	Load transient voltage deviation	V_I = 53 V, I_O = 0.5…1.0 x I_O max Load step 0.1 x I_O max of max I_O, di/dt = 1 A/µs.		40		mV
t_{tr}	Load transient recovery time			0		µs
t_r	Ramp-up time (from 10−90 % of V_{Oi})		6	9	10	ms
t_s	Start-up time (from V_I connection to 90 % of V_{Oi})		13	19	22	ms
t_f	V_I shut-down fall time (from V_I off to 10 % of V_O)	max I_O		1.2		ms
		I_O = 0 % of max I_O		14		s
t_{RC}	RC start-up time	max I_O		18.5		ms
	RC shut-down fall time (from RC off to 10 % of V_O)	max I_O		1.2		ms
		I_O = 0 % of max I_O		14		s
I_O	Output current		0		20	A
I_{lim}	Current limit threshold	T_{ref} < max T_{ref}		27		A
I_{sc}	Short circuit current	T_{ref} = 25ºC, V_O = 0.5V		32		A
V_{Oac}	Output ripple & noise	See ripple & noise section, max I_O, V_{Oi}	5	20	40	mVp-p
OVP	Over voltage protection	T_{ref} = +25°C, V_I = 53 V, 0-100 % of max I_O		5.7		V

Note 1: Low ESR type (ESR approx 11 mΩ). Minimum required capacitance for monotonic start up at 0 % load is 1000 µF / 20 mΩ.
Recommended capacitance is 2000 µF. Maximum recommended capacitance is 4000 µF.
Note 2: Valid for max value: V_I = 38 to 75 V.

© Flex

5 V, 20 A / 100 W Typical Characteristics

PKU 4105C PI

Efficiency

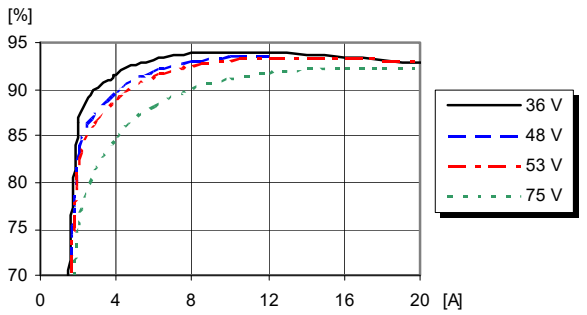

Efficiency vs. load current and input voltage at T_{ref} = +25°C

Power Dissipation

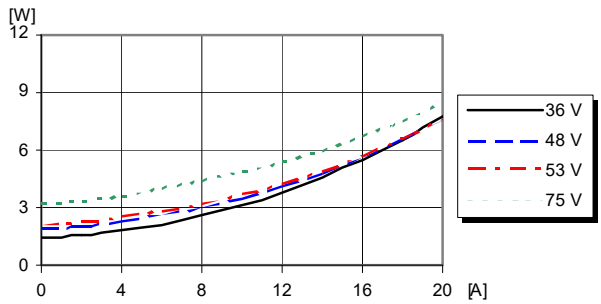

Dissipated power vs. load current and input voltage at T_{ref} = +25°C

Output Current Derating

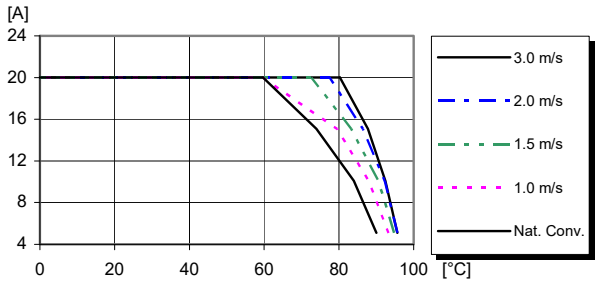

Available load current vs. ambient air temperature and airflow at V_I = 53 V. See Thermal Consideration section.

Output Characteristics

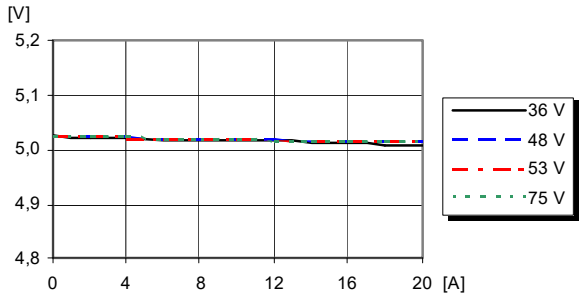

Output voltage vs. load current at T_{ref} = +25°C

Current Limit Characteristics

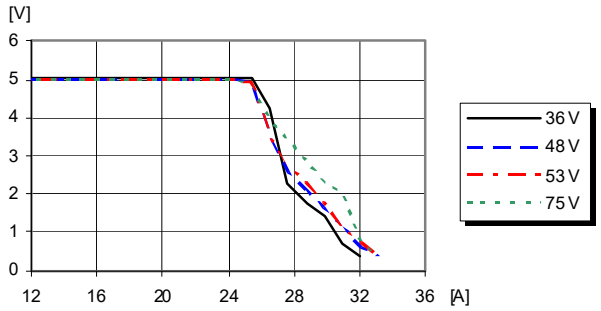

Output voltage vs. load current at I_O > max I_O , T_{ref} = +25°C

5 V, 20 A / 100 W Typical Characteristics

PKU 4105C PI

Start-up

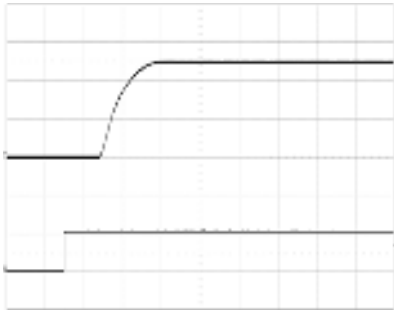

Start-up enabled by connecting V_I at:
T_{ref} = +25°C, V_I = 53 V,
I_O = 20 A.

Top trace: output voltage (2 V/div.).
Bottom trace: input voltage (50 V/div.).
Time scale: (10 ms/div.).

Shut-down

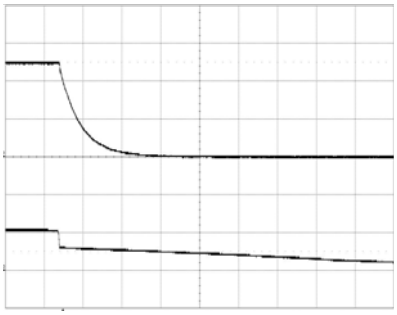

Shut-down enabled by disconnecting V_I at:
T_{ref} = +25°C, V_I = 53 V,
I_O = 20 A resistive load.

Top trace: output voltage (2 V/div.).
Bottom trace: input voltage (50 V/div.).
Time scale: (1 ms/div.).

Output Ripple & Noise

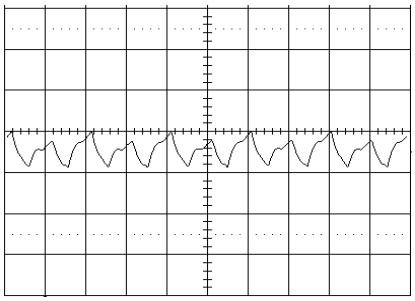

Output voltage ripple at:
T_{ref} = +25°C, V_I = 53 V,
I_O = 20 A.

Trace: output voltage (20 mV/div.).
Time scale: (2 µs/div.).

Output Load Transient Response

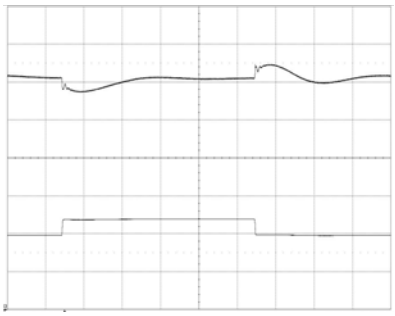

Output voltage response to load current step-change T_{ref} =+25°C, V_I = 53 V.

Top trace: output voltage (100 mV/div.).
Bottom trace: load current (5 A/div.).
Time scale: (0.1 ms/div.).

© Flex

12V, 8.3A / 100W Typical Characteristics

PKU 4104C

T_{ref} = -40 to +90ºC, V_I = 36 to 75 V, unless otherwise specified under Conditions.
Typical values given at: T_{ref} = +25°C, V_I= 53 V, max I_O, unless otherwise specified under Conditions.
C_{out} = 1000 µF, for details see note 1.

Characteristics		Conditions	min	typ	Max	Unit
V_I	Input voltage range		36		75	V
V_{Ioff}	Turn-off input voltage		29	30	32	V
V_{Ion}	Turn-on input voltage		30	32	35	V
C_I	Internal input capacitance			3.3		µF
P_O	Output power		0		100	W
η	Efficiency	50 % of max I_O		92.0		%
		max I_O		93.1		
		50 % of max I_O , V_I = 48 V		92.5		
		max I_O, V_I = 48 V		93.4		
P_d	Power Dissipation	max I_O		7.4	11.5	W
P_{li}	Input idling power	I_O = 0 A, V_I = 53 V		3		W
P_{RC}	Input standby power	V_I = 53 V (turned off with RC)		0.1		W
f_s	Switching frequency	0-100 % of max I_O		250		kHz

V_{Oi}	Output voltage initial setting and accuracy	T_{ref} = +25°C, V_I = 53 V, 50 % of max I_O	11.64	12.0	12.36	V
	Output voltage tolerance band	0-100 % of max I_O	11.5		12.5	V
	Idling voltage	I_O = 0 A		12.0		V
	Line regulation	max I_O		35	160	mV
	Load regulation	V_I = 53 V, 0-100 % of max I_O		65	180	mV
V_{tr}	Load transient voltage deviation	V_I = 53 V, I_O = 0.5…1.0 x I_O max Load step 0.1 x I_O max of max I_O, di/dt = 1 A/µs. See note 1		60		mV
t_{tr}	Load transient recovery time			0		µs
t_r	Ramp-up time (from 10−90 % of V_{Oi})		5	9	12	ms
t_s	Start-up time (from V_I connection to 90 % of V_{Oi})		13	19	24	ms
t_f	V_I shut-down fall time (from V_I off to 10 % of V_O)	max I_O		3.5		ms
		I_O = 0 % of max I_O		8		s
t_{RC}	RC start-up time	max I_O		19		ms
	RC shut-down fall time (from RC off to 10 % of V_O)	max I_O		3.5		ms
		I_O = 0 % of max I_O		8		s
I_O	Output current		0		8.3	A
I_{lim}	Current limit threshold	T_{ref} < max T_{ref}		12		A
I_{sc}	Short circuit current	T_{ref} = 25ºC, V_O = 0.5V		15		A
V_{Oac}	Output ripple & noise	See ripple & noise section, max I_O, V_{Oi}		20	90	mVp-p
OVP	Over voltage protection	T_{ref} = +25°C, V_I = 53 V, 0-100 % of max I_O		13.7		V

Note 1: Low ESR type (ESR approx 20 mΩ). Minimum required capacitance for monotonic start up at 0 % load is 1000 µF / 20 mΩ.
Recommended capacitance is 1000 µF. Maximum recommended capacitance is 2000 µF.

12V, 8.3A / 100W Typical Characteristics

PKU 4104C

Efficiency

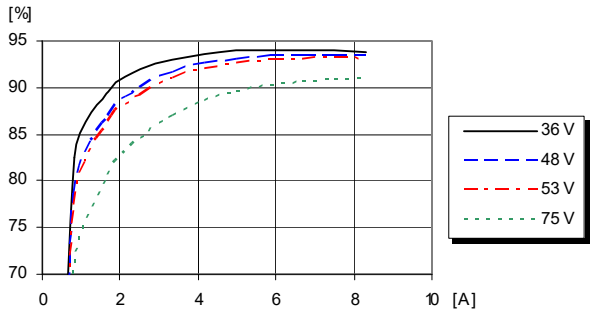

Efficiency vs. load current and input voltage at T_{ref} = +25°C

Power Dissipation

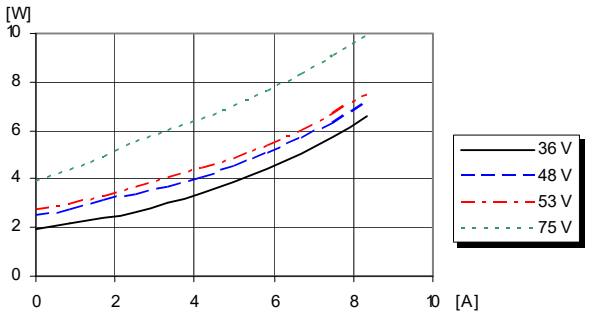

Dissipated power vs. load current and input voltage at T_{ref} = +25°C

Output Current Derating

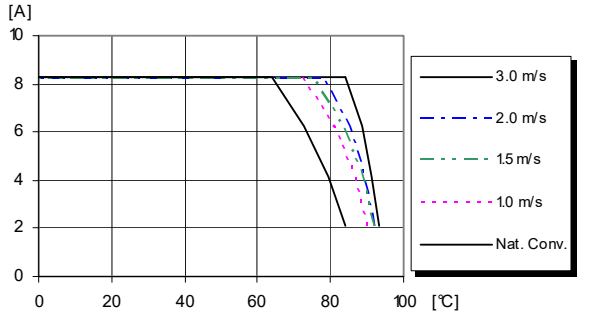

Available load current vs. ambient air temperature and airflow at V_I = 53 V. See Thermal Consideration section.

Output Characteristics

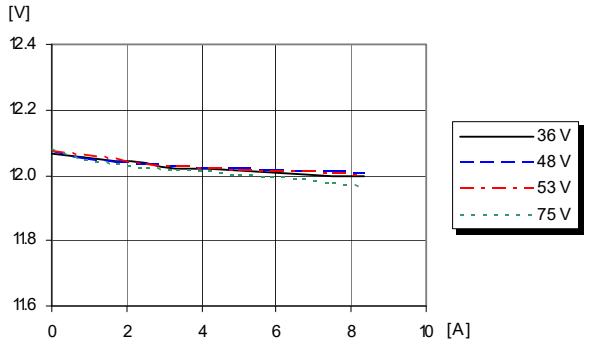

Output voltage vs. load current at T_{ref} = +25°C

Current Limit Characteristics

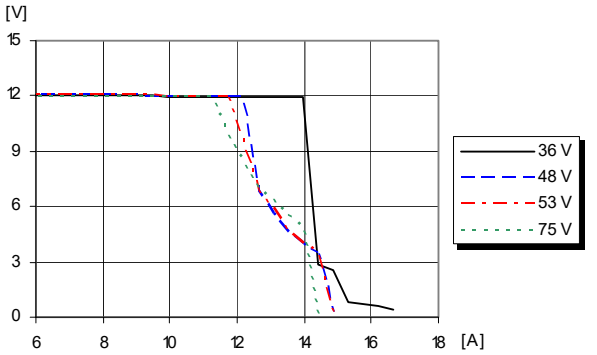

Output voltage vs. load current at I_O > max I_O , T_{ref} = +25°C

12V, 8.3A / 100W Typical Characteristics **PKU 4104C**

Start-up

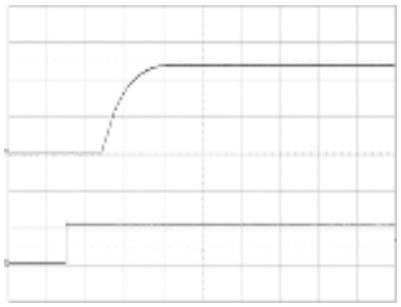

Start-up enabled by connecting V_I at:
T_{ref} = +25°C, V_I = 53 V,
I_O = 8.3 A resistive load.

Top trace: output voltage (5 V/div).
Bottom trace: input voltage (50 V/div).
Time scale: (10 ms/div).

Shut-down

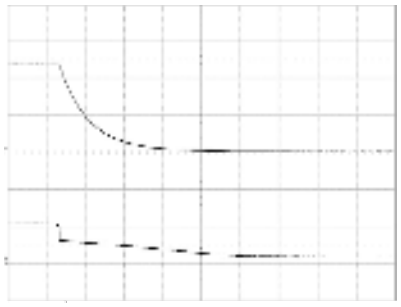

Shut-down enabled by disconnecting V_I at:
T_{ref} = +25°C, V_I = 53 V,
I_O = 8.3 A resistive load.

Top trace: output voltage (5 V/div).
Bottom trace: input voltage (50 V/div).
Time scale: (2 ms/div).

Output Ripple & Noise

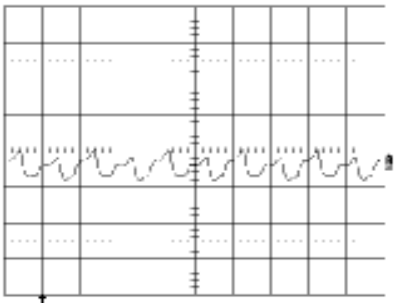

Output voltage ripple at:
T_{ref} = +25°C, V_I = 53 V,
I_O = 8,3 A.

Trace: output voltage (20 mV/div).
Time scale: (2 µs/div).

Output Load Transient Response

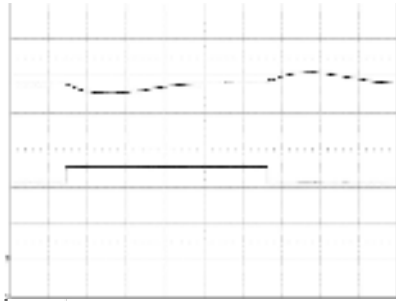

Output voltage response to load current step-change T_{ref} =+25°C, V_I = 53 V.

Top trace: output voltage (200 mV/div).
Bottom trace: load current (2 A/div).
Time scale: (0.1 ms/div).

EMC Specification

Conducted EMI measured according to EN55022, CISPR 22 and FCC part 15J (see test set-up). See Design Note 009 for further information. The fundamental switching frequency is 250 kHz for PKU 4105C PI.

Conducted EMI Input terminal value (typ)

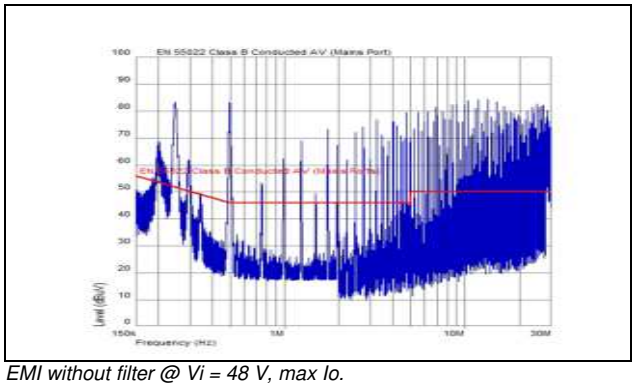

EMI without filter @ Vi = 48 V, max Io.

Optional external filter for class B

Suggested external input filter in order to meet class B in EN 55022, CISPR 22 and FCC part 15J.

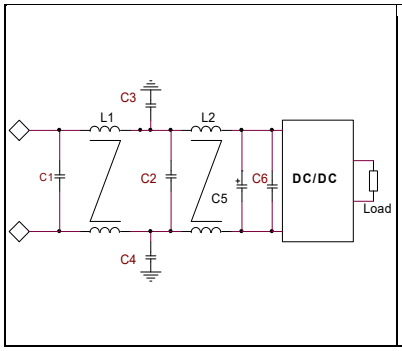

Filter components:
C1, 2, 6 = 1 µF/100 V Ceramic

C3, 4 = 2.2 nF/1500 V Ceramic

C5 = 100 µF/100 V Electrolytic

L1,L2 = 1.47 mH
2.8 A, Common Mode

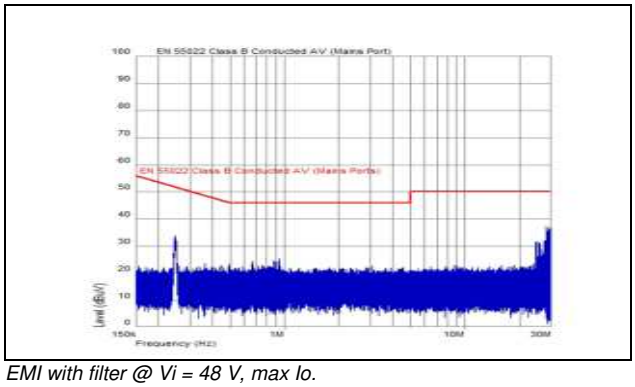

EMI with filter @ Vi = 48 V, max Io.

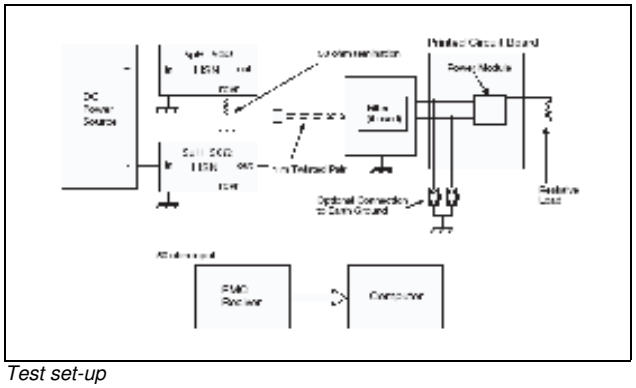

Test set-up

Layout recommendation

The radiated EMI performance of the product will depend on the PWB layout and ground layer design. It is also important to consider the stand-off of the product. If a ground layer is used, it should be connected to the output of the product and the equipment ground or chassis.

A ground layer will increase the stray capacitance in the PWB and improve the high frequency EMC performance.

Output ripple and noise

Output ripple and noise measured according to figure below. See Design Note 022 for detailed information.

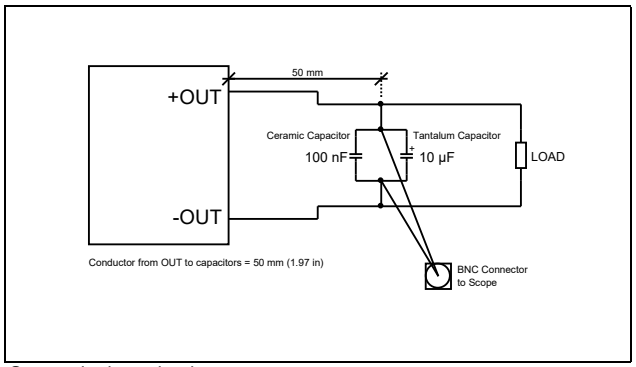

Output ripple and noise test setup

© Flex

Operating information

Input Voltage

The input voltage range 36 to 75 Vdc meets the requirements of the European Telecom Standard ETS 300 132-2 for normal input voltage range in –48 and –60 Vdc systems, -40.5 to -57.0 V and –50.0 to -72 V respectively.
The input voltage range is 45 to 75Vdc for PKU 4106C.
The absolute maximum continuous input voltage is 80 Vdc.
At input voltages exceeding 75 V, the power loss will be higher than at normal input voltage and T_{P1} must be limited to absolute max +105°C for open frame products and T_{P2} must be limited to max +100°C for base plate products. The absolute maximum continuous input voltage is 80 Vdc.

Short duration transient disturbances can occur on the DC distribution and input of the product when a short circuit fault occurs on the equipment side of a protective device (fuse or circuit breaker). The voltage level, duration and energy of the disturbance are dependant on the particular DC distribution network characteristics and can be sufficient to damage the product unless measures are taken to suppress or absorb this energy. The transient voltage can be limited by capacitors and other energy absorbing devices like zener diodes connected across the positive and negative input conductors at a number of strategic points in the distribution network. The end-user must secure that the transient voltage will not exceed the value stated in the Absolute maximum ratings. ETSI TR 100 283 examines the parameters of DC distribution networks and provides guidelines for controlling the transient and reduce its harmful effect.

Turn-off Input Voltage

The products monitor the input voltage and will turn on and turn off at predetermined levels.
The minimum hysteresis between turn on and turn off input voltage is 1 V.

Remote Control (RC)

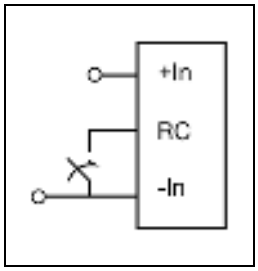

The products are fitted with a remote control function referenced to the primary negative input connection (- In), with negative and positive logic options available.
The RC function allows the product to be turned on/off by an external device like a semiconductor or mechanical switch. The RC pin has an internal pull up resistor to + In.
The external device must provide a minimum required sink current to guarantee a voltage not higher than maximum voltage on the RC pin (see Electrical characteristics table).
When the RC pin is left open, the voltage generated on the RC pin is 7.4 V.

The standard product is provided with “negative logic” RC and will be off until the RC pin is connected to the -In. To turn off the product the RC pin should be left open, or connected to a voltage higher than 5 V referenced to -In. In situations where it is desired to have the product to power up automatically without the need for control signals or a switch, the RC pin can be wired directly to -In.

The second option is “positive logic” remote control, which can be ordered by adding the suffix “P” to the end of the part number. When the RC pin is left open, the product starts up automatically when the input voltage is applied. Turn off is achieved by connecting the RC pin to the -In. The product will restart automatically when this connection is opened.

See Design Note 021 for detailed information.

Input and Output Impedance

The impedance of both the input source and the load will interact with the impedance of the product. It is important that the input source has low characteristic impedance. The products are designed for stable operation without external capacitors connected to the input or output. The performance in some applications can be enhanced by addition of external capacitance as described under External Decoupling Capacitors.

If the input voltage source contains significant inductance, the addition of a 22 - 100 µF capacitor across the input of the product will ensure stable operation. The capacitor is not required when powering the product from an input source with an inductance below 10 µH. The minimum required capacitance value depends on the output power and the input voltage. The higher output power the higher input capacitance is needed. Approximately doubled capacitance value is required for a 24 V input voltage source compared to a 48 V input voltage source.

External Decoupling Capacitors

When powering loads with significant dynamic current requirements, the voltage regulation at the point of load can be improved by addition of decoupling capacitors at the load. The most effective technique is to locate low ESR ceramic and electrolytic capacitors as close to the load as possible, using several parallel capacitors to lower the effective ESR. The ceramic capacitors will handle high-frequency dynamic load changes while the electrolytic capacitors are used to handle low frequency dynamic load changes. It is equally important to use low resistance and low inductance PWB layouts and cabling.

External decoupling capacitors will become part of the product’s control loop. The control loop is optimized for a wide range of external capacitance and the maximum recommended value that could be used without any additional analysis is found in the Electrical specification.
The ESR of the capacitors is a very important parameter. Stable operation is guaranteed with a verified ESR value of >5 mΩ across the output connections.
For further information please contact your local Flex Power Modules representative.

Parallel Operation

Two products may be paralleled for redundancy (1+1) if the total power is equal or less than max P_O. It is not recommended to parallel the products without using external current sharing circuits.

See Design Note 006 for detailed information.

© Flex

Thermal Consideration

General

The products are designed to operate in different thermal environments and sufficient cooling must be provided to ensure reliable operation.

For products mounted on a PWB without a heat sink attached, cooling is achieved mainly by conduction, from the pins to the host board, and convection, which is dependant on the airflow across the product. Increased airflow enhances the cooling of the product. The Output Current Derating graph found in the Output section for each model provides the available output current vs. ambient air temperature and air velocity at V_I = 53 V.

The product is tested on a 254 × 254 mm, 35 µm (1 oz), 16-layer test board mounted vertically in a wind tunnel with a cross-section of 608 × 203 mm.

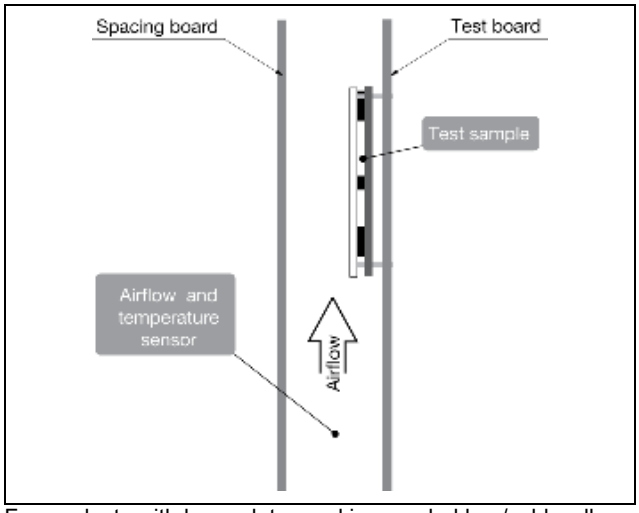

For products with base plate used in a sealed box/cold wall application, cooling is achieved mainly by conduction through the cold wall. The Output Current Derating graphs are found in the Output section for each model. The product is tested in a sealed box test set up with ambient temperature 85°C. See Design Note 028 for further details.

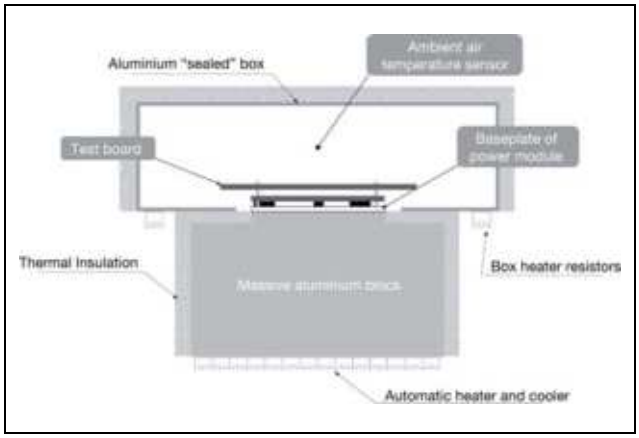

Definition of product operating temperature

The product operating temperatures is used to monitor the temperature of the product, and proper thermal conditions can be verified by measuring the temperature at positions P1 and P2. The temperature at these positions (T_{P1}, T_{P2}) should not exceed the maximum temperatures in the table below. The number of measurement points may vary with different thermal design and topology. Temperatures above maximum T_{P1} and T_{P2}, measured at the reference point P1 for open frame products and at reference point P2 for base plate products are not allowed and may cause permanent damage.

Position	Description	Max Temp.
P1	opto coupler	T_{P1}=105º C
P2	transformer core	T_{P2}=100º C

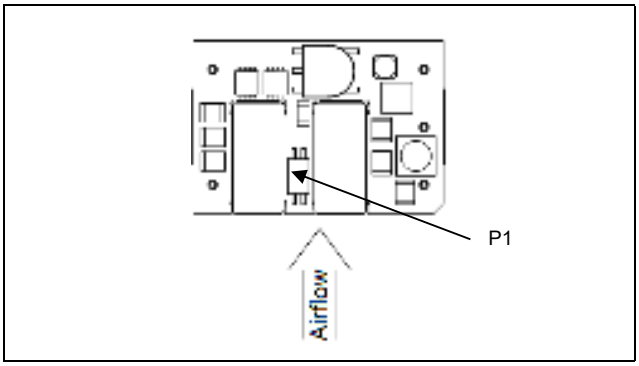

Open frame version

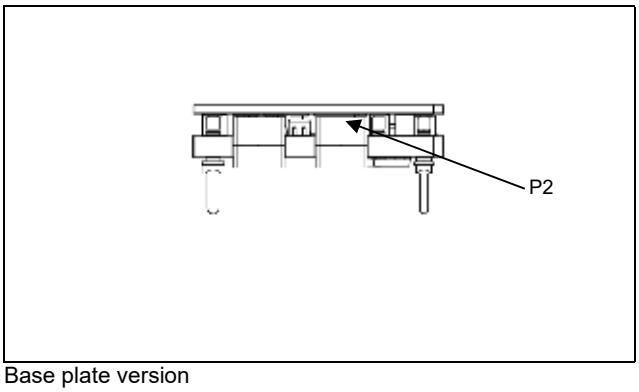

Base plate version

Connections

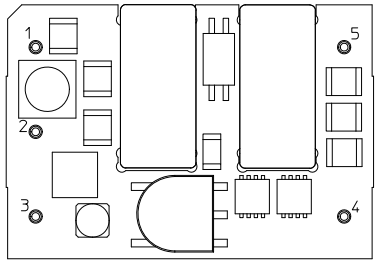

Top View

Pin	Designation	Function
1	+In	Positive Input
2	RC	Remote Control
3	-In	Negative Input
4	-Out	Negative Output
5	+Out	Positive Output

Mechanical Information - Surface Mount Version

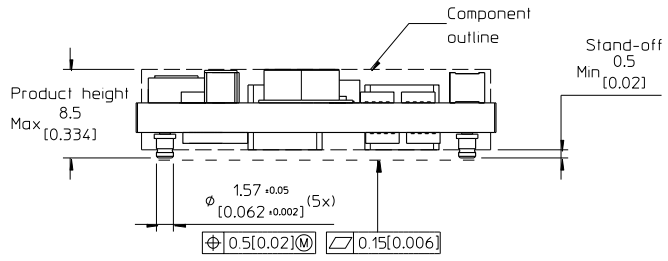

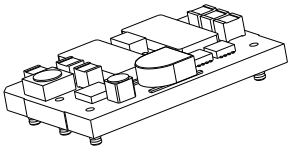

TOP VIEW

Pin position according to the recommended footprint

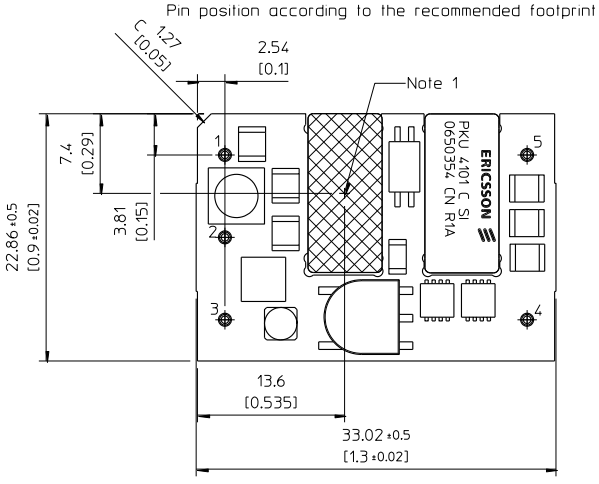

RECOMMENDED FOOTPRINT - TOP VIEW

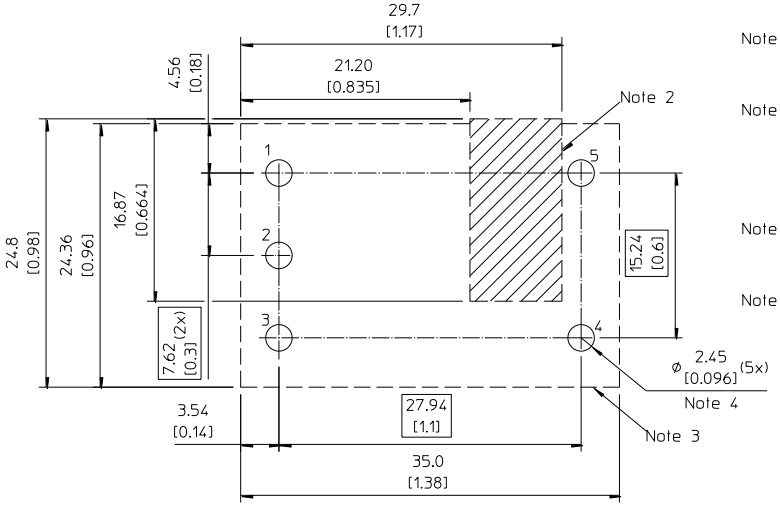

Note 1: Pick up surface area 6.7 x 14.5 mm.
Cross is the center of pick up area.
Recommended keep away area for user components.

Note 2: Hatch area is under the output ferrite.
Do not place components, conductive parts or open vias connected to input circuit in this area.
Open vias are allowed if there is a common input and output ground on the board, i.e. two-wire system.

Note 3: Recommended keep away area for user components
For UL-safety agency standard compliance apply related creepage/clearance requirements.

Note 4: Use sufficient numbers of vias connected to output pin pads for optimal thermal and current conductivity.

Pins:
Material: Copper alloy
Plating: Min 0.1 µm Gold over 1-3 µm Nickel

Weight: Typical 13.5 g
All dimensions in mm [inch].
Tolerances unless specified
x.x mm ±0.5 mm [0.02], x.xx mm ±0.25 mm [0.01]
(not applied on footprint or typical values)

Mechanical Information - Hole Mount, Open Frame Version

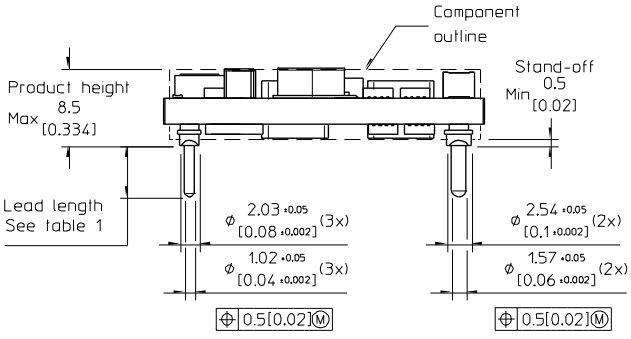

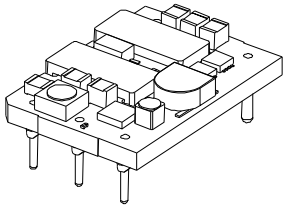

TOP VIEW

Pin positions according to the recommended footprint

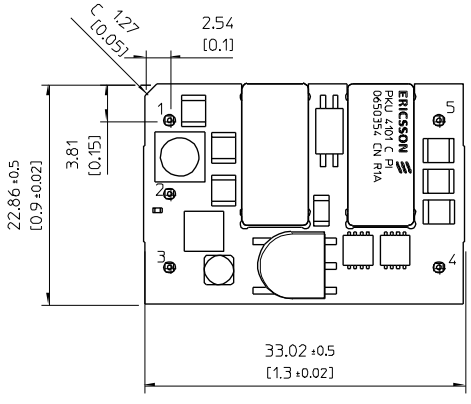

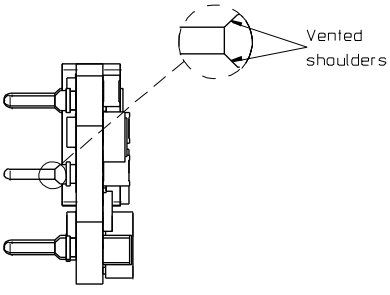

Table 1

Pin option	Lead Length
Standard	5.33 [0.210]
LA	3.69 [0.145]
LB	4.57 [0.180]
LC	2.79 [0.110]

RECOMMENDED FOOTPRINT -TOP VIEW

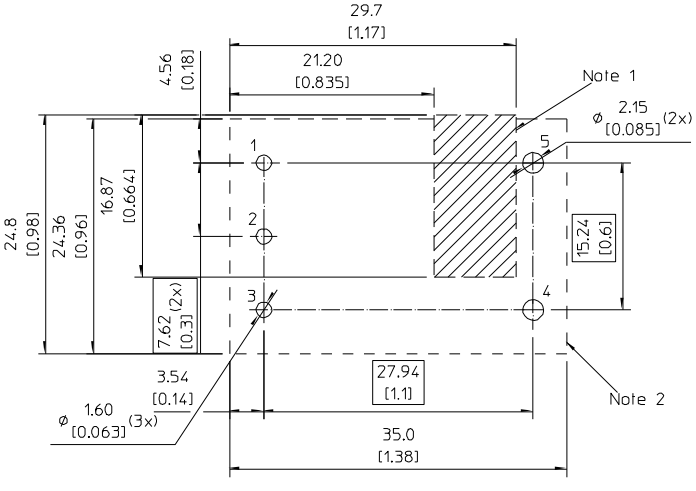

Note 1: Recommended keep away area for user components. For UL-safety agency standard compliance apply related creepage/clearance requirements.

Note 2: Hatch area is under the output ferrite. Do not place components, conductive parts or open vias connected to input circuit in this area. Open vias are allowed if there is a common input and output ground on the board, i.e. two-wire system

Pins:
Material: Copper alloy
Plating: Min 0.1 µm Gold over 1-3 µm Nickel

Weight: Typical 14 g
All dimensions in mm [inch].
Tolerances unless specified
x.x mm ±0.5 mm [0.02], x.xx mm ±0.25 mm [0.01]
(not applied on footprint or typical values)

Mechanical Information – Hole/Surface Mount through Pin in Paste Assembly, Base Plate Version

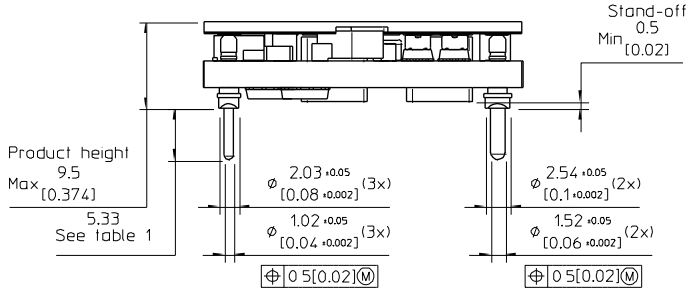

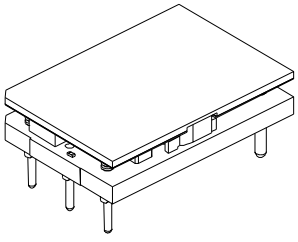

TOP VIEW

Pin positions according to the recommended footprint

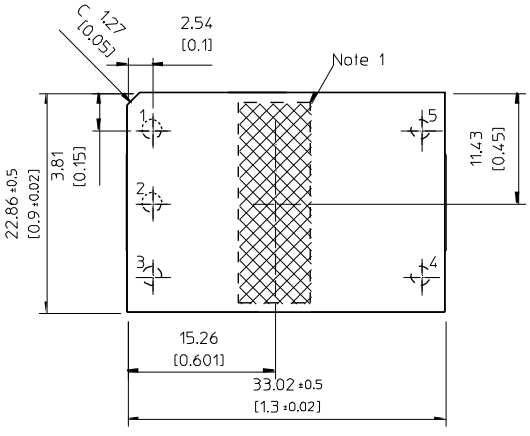

Table 1

Pin option	Lead Length
Standard	5.33 [0.210]
LA	3.69 [0.145]
LB	4.57 [0.180]
LC	2.79 [0.110]

Note 1: Pick up surface area 7.5 x 20.8 mm.
Cross is the center of pick up area.
Recommended keep away area for user components.

Note 2: Hatch area is under the output ferrite.
Do not place components, conductive parts or open vias connected to input circuit in this area.
Open vias are allowed if there is a common input and output ground on the board, i.e. two-wire system.

Note 3: Recommended keep away area for user components
For UL-safety agency standard compliance apply relatec creepage/clearance requirements.

Pins:
Material: Copper alloy
Plating: Min 0.1 µm Gold over 1-3 µm Nickel

RECOMMENDED FOOTPRINT -TOP VIEW

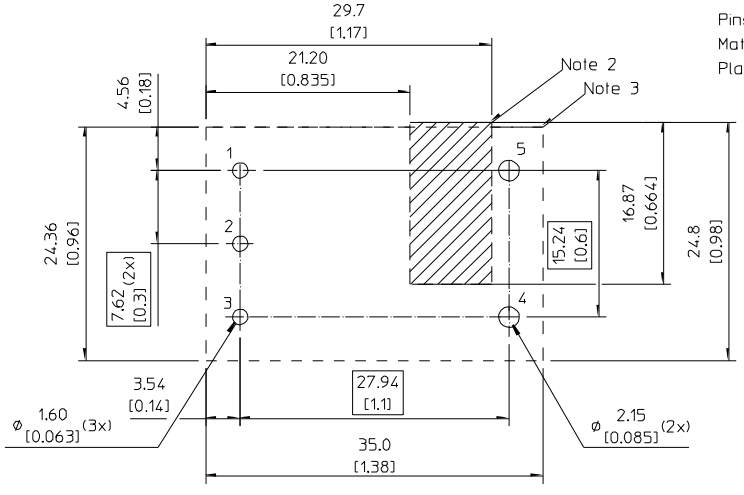

Weight: Typical 18.7 g
All dimensions in mm [inch].
Tolerances unless specified
x.x mm ±0.5 mm [0.02], x.xx mm ±0.25 mm [0.01]
(not applied on footprint or typical values)

All component placements – whether shown as physical components or symbolical outline – are for reference only and are subject to change throughout the product's life cycle, unless explicitly described and dimensioned in this drawing.

© Flex

Soldering Information - Surface Mounting and Hole Mount through Pin in Paste Assembly

The surface mount product is intended for forced convection or vapor phase reflow soldering in SnPb or Pb-free processes.

The reflow profile should be optimised to avoid excessive heating of the product. It is recommended to have a sufficiently extended preheat time to ensure an even temperature across the host PWB and it is also recommended to minimize the time in reflow.

A no-clean flux is recommended to avoid entrapment of cleaning fluids in cavities inside the product or between the product and the host board, since cleaning residues may affect long time reliability and isolation voltage.

General reflow process specifications		SnPb eutectic	Pb-free
Average ramp-up ($T_{PRODUCT}$)		3°C/s max	3°C/s max
Typical solder melting (liquidus) temperature	T_L	183°C	221°C
Minimum reflow time above T_L		60 s	60 s
Minimum pin temperature	T_{PIN}	210°C	235°C
Peak product temperature	$T_{PRODUCT}$	225°C	260°C
Average ramp-down ($T_{PRODUCT}$)		6°C/s max	6°C/s max
Maximum time 25°C to peak		6 minutes	8 minutes

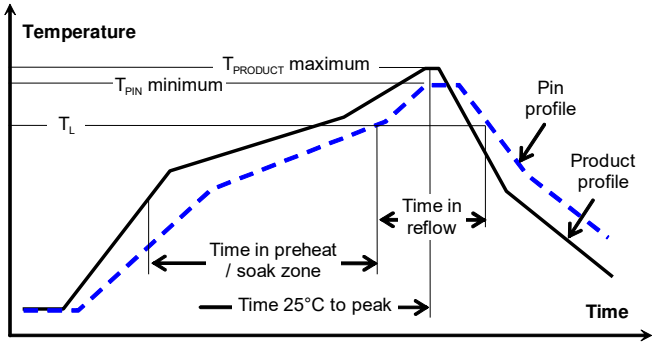

Minimum Pin Temperature Recommendations

Pin number 5 is chosen as reference location for the minimum pin temperature recommendation since this will likely be the coolest solder joint during the reflow process.

SnPb solder processes

For SnPb solder processes, a pin temperature (T_{PIN}) in excess of the solder melting temperature, (T_L, 183°C for Sn63Pb37) for more than 60 seconds and a peak temperature of 220°C is recommended to ensure a reliable solder joint.

For dry packed products only: depending on the type of solder paste and flux system used on the host board, up to a recommended maximum temperature of 245°C could be used, if the products are kept in a controlled environment (dry pack handling and storage) prior to assembly.

Lead-free (Pb-free) solder processes

For Pb-free solder processes, a pin temperature (T_{PIN}) in excess of the solder melting temperature (T_L, 217 to 221°C for SnAgCu solder alloys) for more than 60 seconds and a peak temperature of 245°C on all solder joints is recommended to ensure a reliable solder joint.

Maximum Product Temperature Requirements

Top of the product PWB near pin 2 is chosen as reference location for the maximum (peak) allowed product temperature ($T_{PRODUCT}$) since this will likely be the warmest part of the product during the reflow process.

SnPb solder processes

For SnPb solder processes, the product is qualified for MSL 1 according to IPC/JEDEC standard J-STD-020C.

During reflow $T_{PRODUCT}$ must not exceed 225 °C at any time.

Pb-free solder processes

For Pb-free solder processes, the product is qualified for MSL 3 according to IPC/JEDEC standard J-STD-020C.

During reflow $T_{PRODUCT}$ must not exceed 260 °C at any time.

Dry Pack Information

Products intended for Pb-free reflow soldering processes are delivered in standard moisture barrier bags according to IPC/JEDEC standard J-STD-033 (Handling, packing, shipping and use of moisture/reflow sensitivity surface mount devices).

Using products in high temperature Pb-free soldering processes requires dry pack storage and handling. In case the products have been stored in an uncontrolled environment and no longer can be considered dry, the modules must be baked according to J-STD-033.

Thermocoupler Attachment

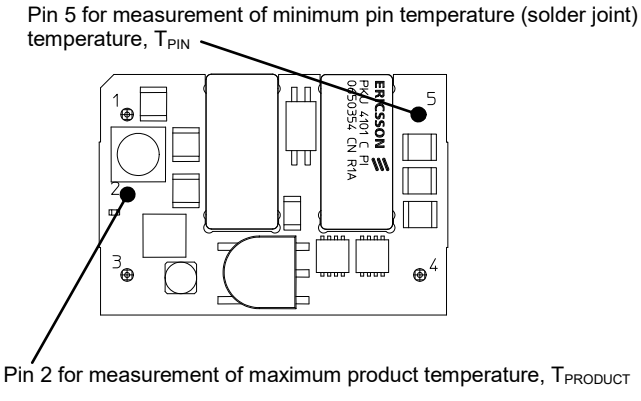

© Flex

Soldering Information - Hole Mounting

The hole mounted product is intended for plated through hole mounting by wave or manual soldering. The pin temperature is specified to maximum to 270°C for maximum 10 seconds.

A maximum preheat rate of 4°C/s and maximum preheat temperature of 150°C is suggested. When soldering by hand, care should be taken to avoid direct contact between the hot soldering iron tip and the pins for more than a few seconds in order to prevent overheating.

A no-clean flux is recommended to avoid entrapment of cleaning fluids in cavities inside the product or between the product and the host board. The cleaning residues may affect long time reliability and isolation voltage.

Delivery Package Information

The surface mounted products are delivered in antistatic injection molded trays (Jedec design guide 4.10D standard) and in antistatic carrier tape (EIA 481 standard).
The through-hole mounted products are delivered in antistatic injection molded trays (Jedec design guide 4.10D standard).

Carrier Tape Specifications	
Material	Antistatic PS
Surface resistance	$<10^7$ Ohm/square
Bakeability	The tape is not bakable
Tape width, W	56 mm [2.2 inch]
Pocket pitch, P_1	36 mm [1.42 inch]
Pocket depth, K_0	8.7 mm [0.343 inch]
Reel diameter	380 mm [15 inch]
Reel capacity	200 products /reel
Reel weight	Rounded 3.0 kg/full reel

EIA standard carrier tape

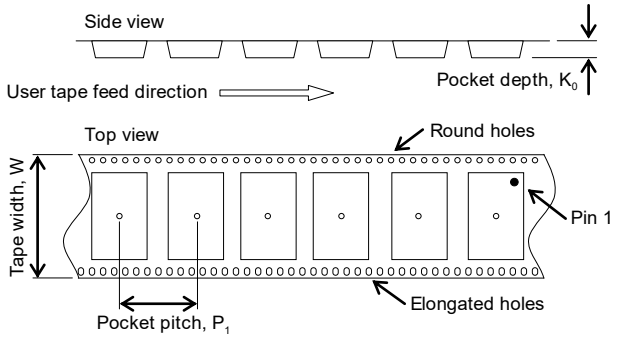

Tray Specifications	
Material	Antistatic PPE
Surface resistance	10^5 < Ohm/square < 10^{12}
Bakability	The trays can be baked at maximum [125°C for 48 hours]
Tray thickness	18.5 mm [0.728 inch]
Box capacity	150 products (5 full trays/box)
Tray weight	190 g empty, 600 g full tray

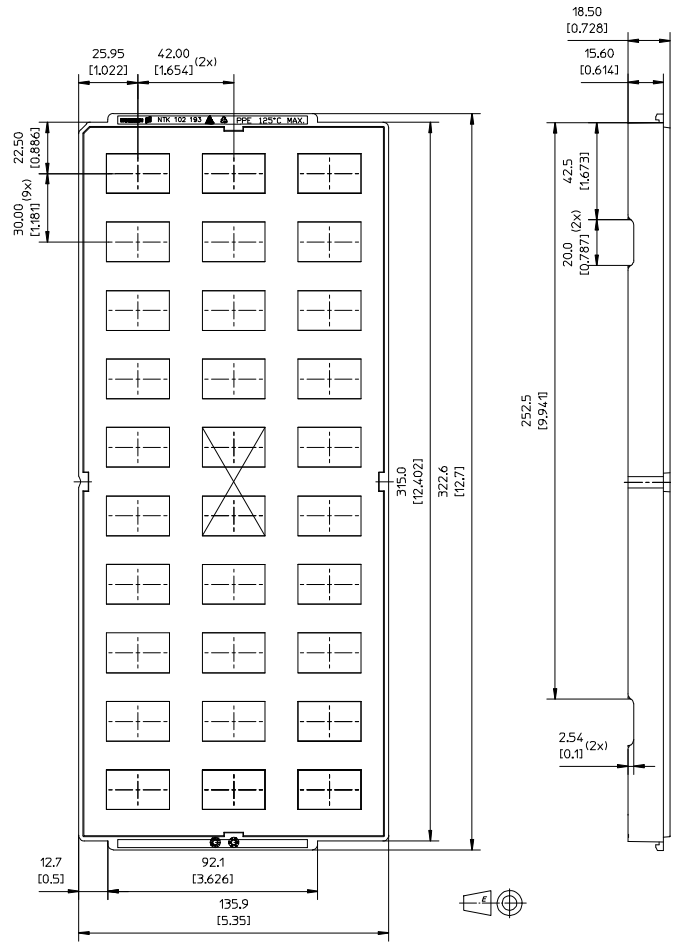

X= Vacuum pickup area
All dimensions in mm [inch]
Tolerances:
X.xx mm ±0.13 mm [0.005], X.x mm ±0.26 mm [0.01]
Note: Tray dimensions refer to pocket center. For exact location of product pick up surface, refer to mechanical drawing.

© Flex

Product Qualification Specification

Characteristics			
External visual inspection	IPC-A-610		
Change of temperature (Temperature cycling)	IEC 60068-2-14 Na	Temperature range Number of cycles Dwell/transfer time	-40 to 100°C 1000 15 min/0-1 min
Cold (in operation)	IEC 60068-2-1 Ad	Temperature T_A Duration	-45°C 72 h
Damp heat	IEC 60068-2-67 Cy	Temperature Humidity Duration	85°C 85 % RH 1000 hours
Dry heat	IEC 60068-2-2 Bd	Temperature Duration	125°C 1000 h
Electrostatic discharge susceptibility	IEC 61340-3-1, JESD 22-A114 IEC 61340-3-2, JESD 22-A115	Human body model (HBM) Machine Model (MM)	Class 2, 2000 V Class 3, 200 V
Immersion in cleaning solvents	IEC 60068-2-45 XA, method 2	Water Glycol ether Isopropyl alcohol	55°C 35°C 35°C
Mechanical shock	IEC 60068-2-27 Ea	Peak acceleration Duration	100 g 6 ms
Moisture reflow sensitivity [1]	J-STD-020C	Level 1 (SnPb-eutectic) Level 3 (Pb Free)	225°C 260°C
Operational life test	MIL-STD-202G, method 108A	Duration	1000 h
Resistance to soldering heat [2]	IEC 60068-2-20 Tb, method 1A	Solder temperature Duration	270°C 10-13 s
Robustness of terminations	IEC 60068-2-21 Test Ua1 IEC 60068-2-21 Test Ue1	Through hole mount products Surface mount products	All leads All leads
Solderability	IEC 60068-2-58 test Td [1] IEC 60068-2-20 test Ta [2]	Preconditioning Temperature, SnPb Eutectic Temperature, Pb-free Preconditioning Temperature, SnPb Eutectic Temperature, Pb-free	150°C dry bake 16 h 215°C 235°C Steam ageing 235°C 245°C
Vibration, broad band random	IEC 60068-2-64 Fh, method 1	Frequency Spectral density Duration	10 to 500 Hz 0.07 g^2/Hz 10 min in each direction

Notes
[1] Only for products intended for reflow soldering (surface mount products)
[2] Only for products intended for wave soldering (plated through hole products)