THIS DRAWING IS UNPUBLISHED. RELEASED FOR PUBLICATION 20
© COPYRIGHT 20 BY TYCO ELECTRONICS CORPORATION. ALL RIGHTS RESERVED.

LOC	DIST
A	66

REVISIONS

P	LTR	DESCRIPTION	DATE	DWN	APVD
	A	RELEASED	09JAN2014	KH	UG
	B	ECR-19-008735	03JUN2019	TB	CT
	C	ECR-19-010597	06JUL2019	TB	TE

PART NUMBER	REVISION	DESCRIPTION	FEED TYPE
2266154-1	B	FINE CRIMP HEIGHT ADJUST	MECHANICAL
2266154-2	C	FINE CRIMP HEIGHT ADJUST	PNEUMATIC
7-2266154-1	B	MECHANICAL AND CRIMP TOOLING KIT	MECHANICAL
7-2266154-2	C	PNEUMATIC AND CRIMP TOOLING KIT	PNEUMATIC
7-2266154-7	A	CRIMP TOOLING KIT	-

ATLANTIC VERSION TERMINATOR INTERFACE ADAPTER

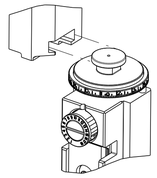

APPLICATOR DATA		
CRIMP	SIZE	TYPE
WIRE	1.68 mm [.066]	F
INSUL	2.30 mm [.091]	OV
APPLICATOR INSTRUCTIONS 408-35042		

TERMINAL DATA: YAZAKI TERMINAL		YAZAKI CRIMP SPECIFICATION	
TERMINAL NAME: 1.5 SYSTEM-2			
WIRE STRIP LENGTH 5.00-5.50 mm [.197-.217 IN]		INSULATION DIAMETER RANGE ∅1.40-1.80 mm [.055-.071 IN]	
TERMINAL APPLICATION SPECIFICATION	72-WT10-3091	-	-
	-	-	-

TERMINALS APPLIED

TE TERMINAL	YAZAKI TERMINAL	TE TERMINAL	YAZAKI TERMINAL
1949461-1	7116-4780-02		

WIRE SIZE	CRIMP HEIGHT mm [INCH]	CRIMP HEIGHT REFERENCE SETTING (4)
0.50mm2	1.00+/-0.05 [.039+/-.002]	8.6
0.35mm2	0.90+/-0.05 [.035+/-.002]	9.6

*WARNING
ON INSTALLATION, SET WIRE DISC TO CRIMP HEIGHT REFERENCE SETTING FOR LARGEST WIRE SIZE. CRIMP HEIGHT REFERENCE SETTINGS GREATER THAN THE VALUE SHOWN MAY CAUSE DAMAGE TO THE CRIMP TOOLING. REFER TO THE INSTRUCTION SHEET FOR PROPER SETUP AND ADJUSTMENTS.

(1) RECOMMENDED SPARE PARTS

(2) REFER TO SUPPLIED INSTRUCTION SHEET FOR CLEANING, LUBRICATION AND STORAGE OF APPLICATOR.

(3) APPLY PART NUMBER 2-23419-6 LOCTITE TO THREADS OF ITEM 242.

(4) CRIMP HEIGHT REFERENCE SETTING WAS THE SETTING USED WHEN THE APPLICATOR WAS QUALIFIED AT THE FACTORY. ADJUSTMENT MAY BE NECESSARY WHEN RUNNING APPLICATOR IN THE FIELD.

5. UNLESS SPECIFIED OTHERWISE TORQUE VALUES SHALL BE USED PER DOCUMENT, 101-35000.

-77	-72	-71	-2	-1	PART NO	DESCRIPTION	ITEM NO
-	1	-	1	-	2119641-1	FEED CAM, AIR FEED	248
-	1	1	1	1	2119082-8	CAM, SNAIL, INSULATION ADJUSTMENT	244
-	1	1	1	1	2079764-1	WASHER, WAVE SPRING, CREST-TO-CREST	243
(3) -	1	1	1	1	2119083-1	RETAINER, INSULATION DIAL	242
-	1	1	1	1	7-18023-7	SCR, SKT HD CAP M3 X 4.0	241
-	-	1	-	1	2119580-1	MECHANICAL FEED ASSEMBLY	239
-	1	-	1	-	2844940-1	AIR FEED MODULE	238
-	REF	REF	REF	REF	994970-2	COUNTER, MAGNETIC	164
-	1	1	1	1	2844908-1	SCREW, LOCKING	99
-	1	1	1	1	2844907-1	POST, LOCKING	98
-	1	1	1	1	455888-6	SPACER, CRIMPER	82
-	1	1	1	1	1803607-3	DOCUMENTATION PACKAGE	71
-	1	1	1	1	2119740-1	TAG,IDENTIFICATION	67
-	2	2	2	2	2168078-1	SCREW, DRIVE, RH, RoHS, 2 x .188	66
-	1	1	1	1	2168083-2	SCR, SKT HD CAP, RoHS, M4 X 8.0	60
-	1	1	1	1	5-18022-5	SCR, HEX HD CAP, M4 X 6.0	59
-	1	1	1	1	1338685-1	PAWL, FEED	56
-	4	4	4	4	2168083-3	SCR, SKT HD CAP, RoHS, M4 X 12.0	54
-	2	2	2	2	1-2168083-0	SCR, SKT HD CAP, RoHS, M4 X 10	53
-	1	1	1	1	5018030-1	NUT, HEX, REG, RoHS, M3	52
-	1	1	1	1	811242-5	BUMPER, HOLD DOWN	51
-	1	1	1	1	690753-2	SPACER, TONKER	50
-	1	2	1	2	18023-9	SCR, SKT HD CAP M4 X 6.0	49
-	-	1	-	1	2119652-1	FEED CAM, PRE FEED	48
-	-	1	-	1	2119653-1	FEED CAM, POST FEED	47
-	1	1	1	1	1803583-9	APPLICATOR BASIC ASSEMBLY, SF	46
-	1	1	1	1	1803515-1	RAM ASSEMBLY, SF ATLANTIC	44
-	1	1	1	1	1803602-1	SCR, BHSC, RoHS (M8 X 25)	41
-	1	1	1	1	2-1752356-0	SUPPORT, TERMINAL	34
-	2	2	2	2	2079383-5	SCR, BHSC, RoHS (M4 X 20)	33
-	2	2	2	2	3-2844962-0	SPACER, CYLINDRICAL, STRIP GUIDE	30
-	1	1	1	1	2844992-4	ASSEMBLY, STRIP GUIDE	29
-	1	1	1	1	1-455888-0	SPACER, CRIMPER	28
-	1	1	1	1	240792-1	DRAG, TERMINAL	25
-	1	1	1	1	1320928-2	STRIP GUIDE	24
-	1	1	1	1	2168083-2	SCR, SKT HD CAP, RoHS, M4 X 8.0	21
-	2	2	2	2	1-18028-2	WASHER, FLAT, REG M4	20
-	1	1	1	1	2119533-1	STRIPPER, SIDE FEED	19
(1) -	1	1	1	1	2119806-1	INSERT, SHEAR	13
-	1	1	1	1	3-22280-3	SPRING, COMPRESSION	12
-	1	1	1	1	1-356885-4	STOP, SHEAR	11
(1) -	1	1	1	1	2119805-1	SHEAR HOLDER, FRONT	10
(1) -	1	1	1	1	318707-1	FLOATING SHEAR, FRONT	9
(1) 1	2	2	1	1	6-1633138-0	ANVIL, COMBINATION	8
-	-	-	-	-	-	-	7
-	-	-	-	-	-	-	6
-	1	1	1	1	2119757-4	DEPRESSOR, SHEAR	5
-	1	1	1	1	238011-4	BLOCK, CRIMPER SPACER	4
(1) 1	2	2	1	1	1633963-6	CRIMPER, INSULATION OVERLAP PREMIUM	3
-	1	1	1	1	455888-9	SPACER, CRIMPER	2
(1) 1	2	2	1	1	1-568176-4	CRIMPER, WIRE	1

ATLANTIC VERSION
Shown on sheets 1 of 4 & 2 of 4
(Pacific version shown on sheets 3 of 4 & 4 of 4)

THIS DRAWING IS A CONTROLLED DOCUMENT FOR TYCO ELECTRONICS CORPORATION. IT IS SUBJECT TO CHANGE AND THE CONTROLLING ENGINEERING ORGANIZATION SHOULD BE CONTACTED FOR THE LATEST REVISION.

DIMENSIONS: mm

TOLERANCES UNLESS OTHERWISE SPECIFIED:
0 PLC ±-
1 PLC ±-
2 PLC ±-
3 PLC ±-
4 PLC ±-
ANGLES ±-

MATERIAL - -
FINISH - -

DWN	K.HUANG	19NOV2013
CHK	L.ZHANG	19NOV2013
APVD	U.GUO	19NOV2013
PRODUCT SPEC	-	
APPLICATION SPEC	-	
WEIGHT	-	

TE Connectivity
Harrisburg, PA 17105-3608

NAME: Ocean Side Feed Applicator -

SIZE	CAGE CODE	DRAWING NO	RESTRICTED TO
A1	00779	C-2266154	-

Customer Accessible Production Drawing | SCALE 1:2 | SHEET 1 OF 4 | REV C

SHEETS 3 & 4 ARE NOT REQUIRED FOR ATLANTIC VERSION

THIS DRAWING IS UNPUBLISHED. RELEASED FOR PUBLICATION 20
© COPYRIGHT 20 BY TYCO ELECTRONICS CORPORATION, ALL RIGHTS RESERVED.

LOC	DIST
A	66

REVISIONS

P	LTR	DESCRIPTION	DATE	DWN	APVD
	-	SEE SHEET 1	-	-	-

FEED TYPE MECHANICAL

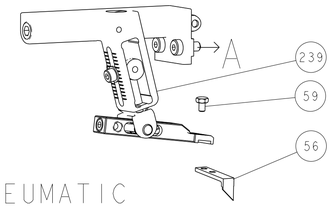

PNEUMATIC

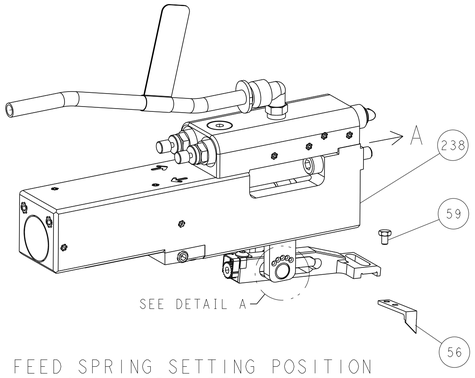

FEED SPRING SETTING POSITION
(SHOWN FROM REAR SIDE)

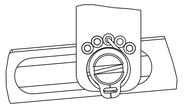

DETAIL A

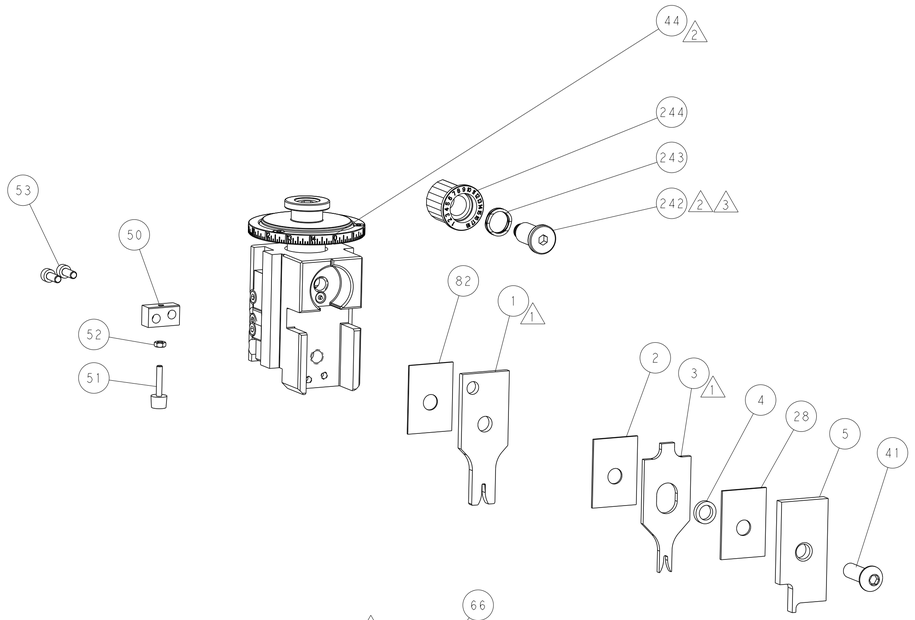

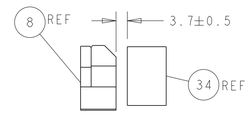

TERMINAL SUPPORT LOCATION

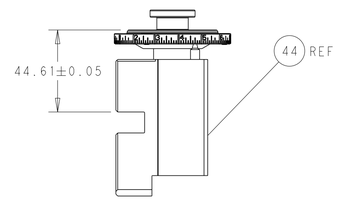

RAM SET-UP

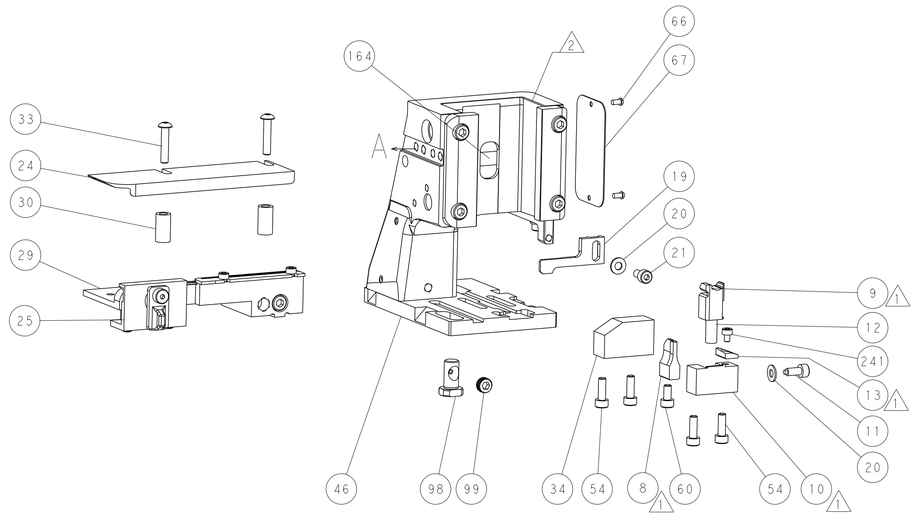

ITEM 30 LOCATED AT
FRONT HOLES

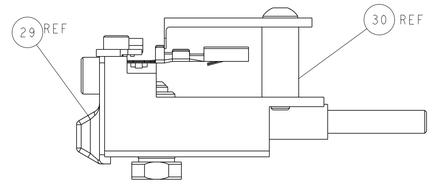

FEED TRACK POSITION
GUIDE BY INSULATION BARREL

CAM POSITIONS

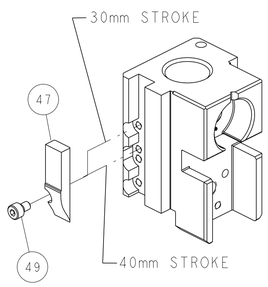

MECHANICAL
POST FEED

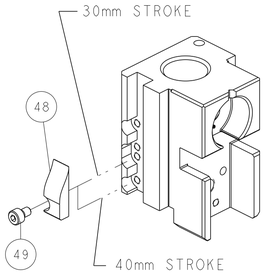

MECHANICAL
PRE FEED

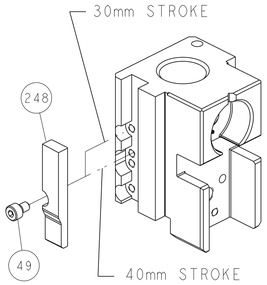

AIR FEED

ATLANTIC VERSION

Shown on sheets 1 of 4 & 2 of 4
(Pacific version shown on sheets 3 of 4 & 4 of 4)

THIS DRAWING IS A CONTROLLED DOCUMENT FOR TYCO ELECTRONICS CORPORATION. IT IS SUBJECT TO CHANGE. THE CONTROL NO. ABOVE INDICATES THE ORGANIZATION SHOULD BE CONTACTED FOR THE LATEST REVISION.

DIMENSIONS: mm

TOLERANCES UNLESS OTHERWISE SPECIFIED:
0 PLC ±-
1 PLC ±-
2 PLC ±-
3 PLC ±-
4 PLC ±-
ANGLES ±-

MATERIAL -
FINISH -

DWN	K. HUANG	19NOV2013
CHK	L. ZHANG	19NOV2013
APVD	U. GUO	19NOV2013
PRODUCT SPEC	-	
APPLICATION SPEC	-	
WEIGHT	-	

TE Connectivity
Harrisburg, PA 17105-3608

NAME: Ocean Side Feed Applicator -

SIZE	CAGE CODE	DRAWING NO	RESTRICTED TO
A1	00779	C-2266154	-

Customer Accessible Production Drawing | SCALE 1:2 | SHEET 2 OF 4 | REV C

SHEETS 3 & 4 ARE NOT REQUIRED FOR ATLANTIC VERSION

THIS DRAWING IS UNPUBLISHED. RELEASED FOR PUBLICATION 20
© COPYRIGHT 20 BY TYCO ELECTRONICS CORPORATION. ALL RIGHTS RESERVED.

LOC	DIST
A	66

REVISIONS

P	LTR	DESCRIPTION	DATE	DWN	APVD
	-	SEE SHEET 1	-	-	-

PART NUMBER	REVISION	DESCRIPTION	FEED TYPE
2-2266154-1	B	FINE CRIMP HEIGHT ADJUST	MECHANICAL
2-2266154-2	C	FINE CRIMP HEIGHT ADJUST	PNEUMATIC
7-2266154-7	A	CRIMP TOOLING KIT	-

PACIFIC VERSION TERMINATOR INTERFACE ADAPTER

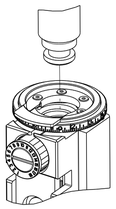

APPLICATOR DATA		
CRIMP	SIZE	TYPE
WIRE	1.68 mm [.066]	F
INSUL	2.30 mm [.091]	OV
APPLICATOR INSTRUCTIONS 408-35042		

TERMINAL DATA: YAZAKI TERMINAL		YAZAKI CRIMP SPECIFICATION	
TERMINAL NAME: 1.5 SYSTEM-2			
WIRE STRIP LENGTH 5.00-5.50 mm [.197-.217 IN]		INSULATION DIAMETER RANGE ∅1.40-1.80 mm [.055-.071 IN]	
TERMINAL APPLICATION SPECIFICATION	72-WT10-3091	-	-
	-	-	-

TERMINALS APPLIED

TE TERMINAL	YAZAKI TERMINAL	TE TERMINAL	YAZAKI TERMINAL
1949461-1	7116-4780-02		

WIRE SIZE	CRIMP HEIGHT mm [INCH]	CRIMP HEIGHT REFERENCE SETTING 4
0.50mm2	1.00+/-0.05 [.039+/-.002]	8.6
0.35mm2	0.90+/-0.05 [.035+/-.002]	9.6

*WARNING
ON INSTALLATION, SET WIRE DISC TO CRIMP HEIGHT REFERENCE SETTING FOR LARGEST WIRE SIZE. CRIMP HEIGHT REFERENCE SETTINGS GREATER THAN THE VALUE SHOWN MAY CAUSE DAMAGE TO THE CRIMP TOOLING. REFER TO THE INSTRUCTION SHEET FOR PROPER SETUP AND ADJUSTMENTS.

1. RECOMMENDED SPARE PARTS
2. REFER TO SUPPLIED INSTRUCTION SHEET FOR CLEANING, LUBRICATION AND STORAGE OF APPLICATOR.
3. APPLY PART NUMBER 2-23419-6 LOCTITE TO THREADS OF ITEM 242.
4. CRIMP HEIGHT REFERENCE SETTING WAS THE SETTING USED WHEN THE APPLICATOR WAS QUALIFIED AT THE FACTORY. ADJUSTMENT MAY BE NECESSARY WHEN RUNNING APPLICATOR IN THE FIELD.
5. UNLESS SPECIFIED OTHERWISE TORQUE VALUES SHALL BE USED PER DOCUMENT, 101-35000.

	-77	-22	-21	PART NO	DESCRIPTION	ITEM NO
	-	1	1	2119082-8	CAM, SNAIL, INSULATION ADJUSTMENT	244
	-	1	1	2079764-1	WASHER, WAVE SPRING, CREST-TO-CREST	243
3	-	1	1	2119083-1	RETAINER, INSULATION DIAL	242
	-	1	1	7-18023-7	SCR, SKT HD CAP M3 X 4.0	241
	-	-	1	2119580-1	MECHANICAL FEED ASSEMBLY	239
	-	1	-	2844940-1	AIR FEED MODULE	238
	-	REF	REF	994970-2	COUNTER, MAGNETIC	164
	-	1	-	2119641-2	FEED CAM, AIR FEED	151
	-	1	1	2168083-8	SCR, SKT HD CAP, RoHS, M4 X 16	144
	-	4	4	2168083-9	SCR, SKT HD CAP, RoHS, M4 X 20	143
	-	-	1	2119653-2	FEED CAM, POST FEED	142
	-	1	1	1-1803583-0	APPLICATOR BASIC ASSEMBLY, SF	141
	-	1	1	1803516-1	RAM ASSEMBLY, SF PACIFIC	140
	-	1	1	2844908-1	SCREW, LOCKING	99
	-	1	1	2844907-1	POST, LOCKING	98
	-	1	1	455888-6	SPACER, CRIMPER	82
	-	1	1	1803607-3	DOCUMENTATION PACKAGE	71
	-	1	1	2119740-1	TAG,IDENTIFICATION	67
	-	2	2	2168078-1	SCREW, DRIVE, RH, RoHS, 2 x .188	66
	-	1	1	5-18022-5	SCR, HEX HD CAP, M4 X 6.0	59
	-	1	1	1338685-1	PAWL, FEED	56
	-	2	2	1-2168083-0	SCR, SKT HD CAP, RoHS, M4 X 10	53
	-	1	1	5018030-1	NUT, HEX, REG, RoHS, M3	52
	-	1	1	811242-5	BUMPER, HOLD DOWN	51
	-	1	1	690753-2	SPACER, TONKER	50
	-	1	2	18023-9	SCR, SKT HD CAP M4 X 6.0	49
	-	-	1	2119652-1	FEED CAM, PRE FEED	48
	-	1	1	1803602-1	SCR, BHSC, RoHS (M8 X 25)	41
	-	1	1	2-1752356-0	SUPPORT, TERMINAL	34
	-	2	2	2079383-5	SCR, BHSC, RoHS (M4 X 20)	33
	-	2	2	3-2844962-0	SPACER, CYLINDRICAL, STRIP GUIDE	30
	-	1	1	2844992-4	ASSEMBLY, STRIP GUIDE	29
	-	1	1	1-455888-0	SPACER, CRIMPER	28
	-	1	1	240792-1	DRAG, TERMINAL	25
	-	1	1	1320928-2	STRIP GUIDE	24
	-	1	1	2168083-2	SCR, SKT HD CAP, RoHS, M4 X 8.0	21
	-	2	2	1-18028-2	WASHER, FLAT, REG M4	20
	-	1	1	2119533-1	STRIPPER, SIDE FEED	19
1	-	1	1	2119806-1	INSERT, SHEAR	13
	-	1	1	3-22280-3	SPRING, COMPRESSION	12
	-	1	1	1-356885-4	STOP, SHEAR	11
1	-	1	1	2119805-1	SHEAR HOLDER, FRONT	10
1	-	1	1	318707-1	FLOATING SHEAR, FRONT	9
1	1	1	1	6-1633138-0	ANVIL, COMBINATION	8
	-	-	-	-	-	7
	-	-	-	-	-	6
	-	1	1	2119757-4	DEPRESSOR, SHEAR	5
	-	1	1	238011-4	BLOCK, CRIMPER SPACER	4
1	1	1	1	1633963-6	CRIMPER, INSULATION OVERLAP PREMIUM	3
	-	1	1	455888-9	SPACER, CRIMPER	2
1	1	1	1	1-568176-4	CRIMPER, WIRE	1

PACIFIC VERSION
Shown on sheets 3 of 4 & 4 of 4
(Atlantic version shown on sheets 1 of 4 & 2 of 4)

THIS DRAWING IS A CONTROLLED DOCUMENT FOR TYCO ELECTRONICS CORPORATION. IT IS SUBJECT TO CHANGE WITHOUT NOTICE. ALL PARTIES OF THIS ORGANIZATION SHOULD BE CONTACTED FOR THE LATEST REVISION.

DIMENSIONS: mm
TOLERANCES UNLESS OTHERWISE SPECIFIED:
0 PLC ±-
1 PLC ±-
2 PLC ±-
3 PLC ±-
4 PLC ±-
ANGLES ±-
MATERIAL - -
FINISH - -

DWN K.HUANG 19NOV2013
CHK L.ZHANG 19NOV2013
APVD U.GUO 19NOV2013
PRODUCT SPEC -
APPLICATION SPEC -
WEIGHT -

TE Connectivity
Harrisburg, PA 17105-3608

NAME Ocean Side Feed Applicator -

SIZE	CAGE CODE	DRAWING NO	RESTRICTED TO
A1	00779	C-2266154	-

Customer Accessible Production Drawing | SCALE 1:2 | SHEET 3 OF 4 | REV C

SHEETS 1 & 2 ARE NOT REQUIRED FOR PACIFIC VERSION

THIS DRAWING IS UNPUBLISHED. RELEASED FOR PUBLICATION 20
© COPYRIGHT 20 BY TYCO ELECTRONICS CORPORATION. ALL RIGHTS RESERVED.

LOC	DIST
A	66

REVISIONS

P	LTR	DESCRIPTION	DATE	DWN	APVD
	-	SEE SHEET 1	-	-	-

FEED TYPE

MECHANICAL

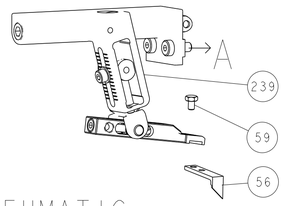

PNEUMATIC

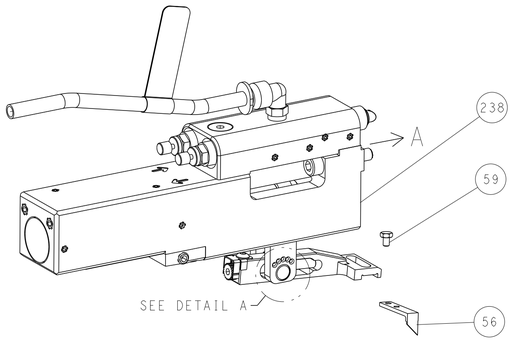

FEED SPRING SETTING POSITION
(SHOWN FROM REAR SIDE)

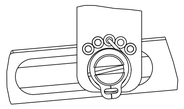

DETAIL A

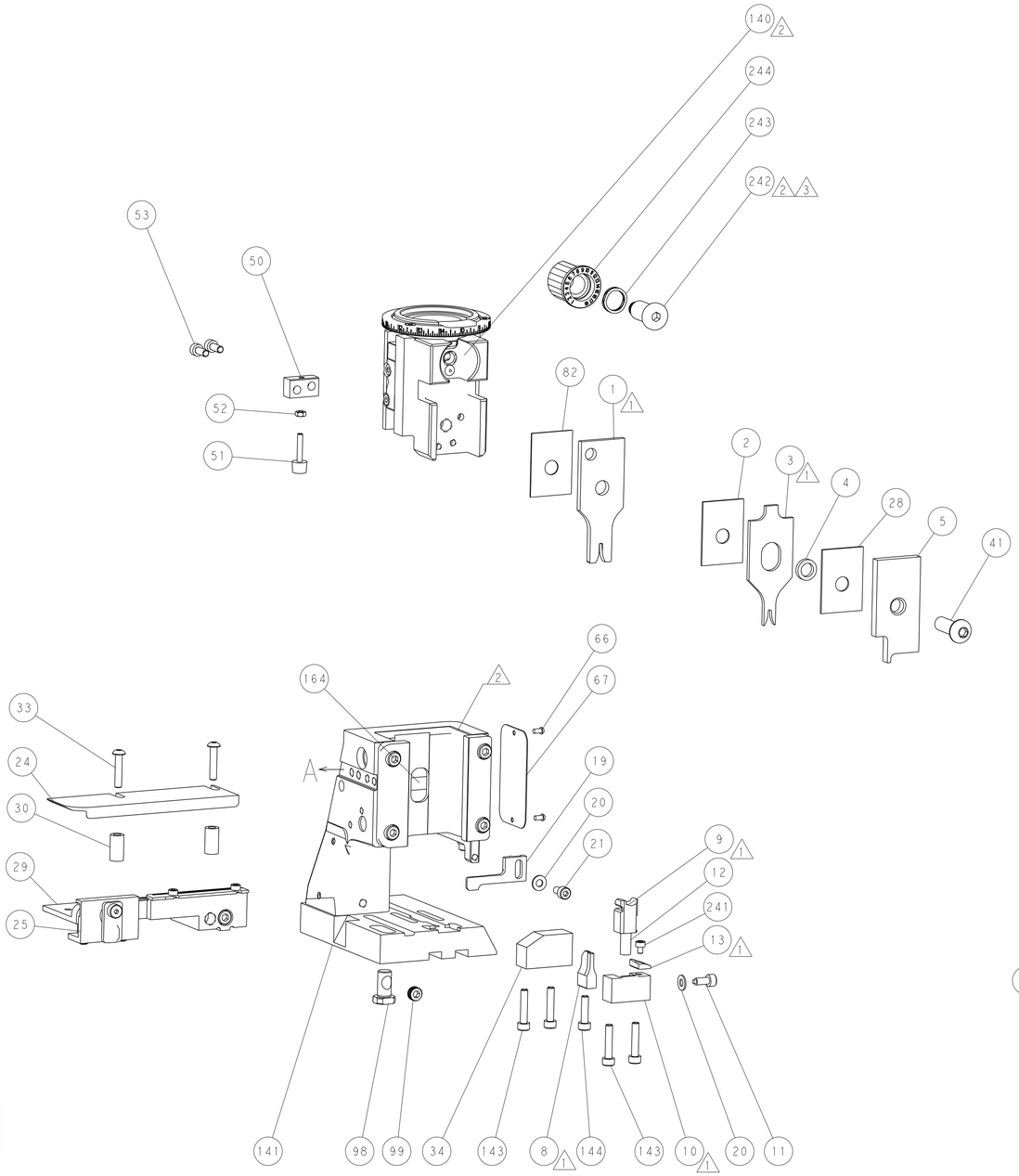

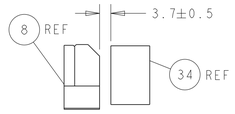

TERMINAL SUPPORT LOCATION

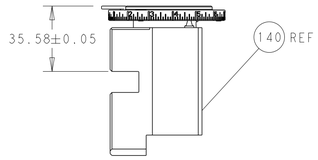

RAM SET-UP

ITEM 30 LOCATED AT
FRONT HOLES

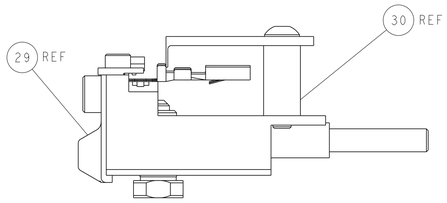

FEED TRACK POSITION
GUIDE BY INSULATION BARREL

CAM POSITIONS

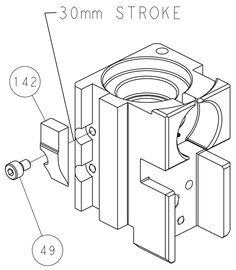

MECHANICAL
POST FEED

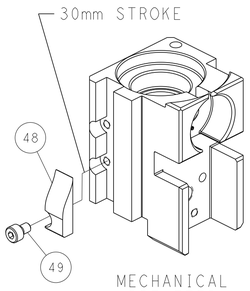

MECHANICAL
PRE FEED

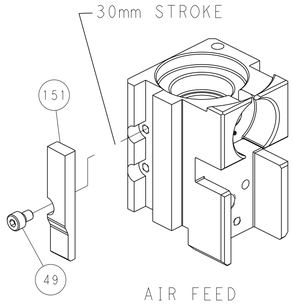

AIR FEED

PACIFIC VERSION
Shown on sheets 3 of 4 & 4 of 4
(Atlantic version shown on sheets 1 of 4 & 2 of 4)

THIS DRAWING IS A CONTROLLED DOCUMENT FOR TYCO ELECTRONICS CORPORATION. IT IS SUBJECT TO CHANGE AND THE CONTROLLING ENGINEERING ORGANIZATION SHOULD BE CONTACTED FOR THE LATEST REVISION.	DWN K.HUANG 19NOV2013	TE Connectivity Harrisburg, PA 17105-3608	
DIMENSIONS: mm	CHK L.ZHANG 19NOV2013		
TOLERANCES UNLESS OTHERWISE SPECIFIED: 0 PLC ±- 1 PLC ±- 2 PLC ±- 3 PLC ±- 4 PLC ±- ANGLES ±-	APVD U.GUO 19NOV2013	NAME Ocean Side Feed Applicator -	
	PRODUCT SPEC -		
	APPLICATION SPEC -	SIZE A1	CAGE CODE 00779
MATERIAL - -	WEIGHT -	DRAWING NO C-2266154	RESTRICTED TO -
FINISH - -	Customer Accessible Production Drawing	SCALE 1:2	SHEET 4 OF 4 REV C

SHEETS 1 & 2 ARE NOT REQUIRED FOR PACIFIC VERSION