APT80F60J

Microsemi POWER PRODUCTS GROUP

Power MOS 8 Cooler™

600V, 84A, 0.055Ω Max, t_{rr} ≤ 370ns

N-Channel FREDFET

Power MOS 8™ is a high speed, high voltage N-channel switch-mode power MOSFET. This 'FREDFET' version has a drain-source (body) diode that has been optimized for high reliability in ZVS phase shifted bridge and other circuits through reduced t_{rr}, soft recovery, and high recovery dv/dt capability. Low gate charge, high gain, and a greatly reduced ratio of C_{rss}/C_{iss} result in excellent noise immunity and low switching loss. The intrinsic gate resistance and capacitance of the poly-silicon gate structure help control di/dt during switching, resulting in low EMI and reliable paralleling, even when switching at very high frequency.

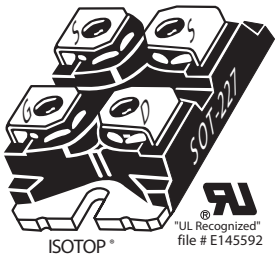

"UL Recognized" file # E145592

ISOTOP®

APT80F60J

Single die FREDFET

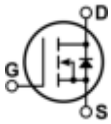

FEATURES

- **Fast switching with low EMI**
- **Low t_{rr} for high reliability**
- **Ultra low C_{rss} for improved noise immunity**
- **Low gate charge**
- **Avalanche energy rated**
- **RoHS compliant**

TYPICAL APPLICATIONS

- **ZVS phase shifted and other full bridge**
- **Half bridge**
- **PFC and other boost converter**
- **Buck converter**
- **Single and two switch forward**
- **Flyback**

Absolute Maximum Ratings

Symbol	Parameter	Ratings	Unit
I_D	Continuous Drain Current @ T_C = 25°C	84	A
	Continuous Drain Current @ T_C = 100°C	52	
I_{DM}	Pulsed Drain Current ①	447	
V_{GS}	Gate-Source Voltage	±30	V
E_{AS}	Single Pulse Avalanche Energy ②	3352	mJ
I_{AR}	Avalanche Current, Repetitive or Non-Repetitive	60	A

Thermal and Mechanical Characteristics

Symbol	Characteristic	Min	Typ	Max	Unit
P_D	Total Power Dissipation @ T_C = 25°C			961	W
$R_{\theta JC}$	Junction to Case Thermal Resistance			0.13	°C/W
$R_{\theta CS}$	Case to Sink Thermal Resistance, Flat, Greased Surface		0.15		
T_J,T_{STG}	Operating and Storage Junction Temperature Range	-55		150	°C
$V_{Isolation}$	RMS Voltage (50-60hHz Sinusoidal Waveform from Terminals to Mounting Base for 1 Min.)	2500			V
W_T	Package Weight		1.03		oz
			29.2		g
Torque	Terminals and Mounting Screws.			10	in·lbf
				1.1	N·m

Static Characteristics T_J = 25°C unless otherwise specified APT80F60J

Symbol	Parameter	Test Conditions		Min	Typ	Max	Unit
$V_{BR(DSS)}$	Drain-Source Breakdown Voltage	V_{GS} = 0V, I_D = 250μA		600			V
$\Delta V_{BR(DSS)}/\Delta T_J$	Breakdown Voltage Temperature Coefficient	Reference to 25°C, I_D = 250μA			0.60		V/°C
$R_{DS(on)}$	Drain-Source On Resistance③	V_{GS} = 10V, I_D = 60A			0.042	0.055	Ω
$V_{GS(th)}$	Gate-Source Threshold Voltage	V_{GS} = V_{DS}, I_D = 2.5mA		2.5	4	5	V
$\Delta V_{GS(th)}/\Delta T_J$	Threshold Voltage Temperature Coefficient				-10		mV/°C
I_{DSS}	Zero Gate Voltage Drain Current	V_{DS} = 600V, V_{GS} = 0V	T_J = 25°C			250	μA
			T_J = 125°C			1000	
I_{GSS}	Gate-Source Leakage Current	V_{GS} = ±30V				±100	nA

Dynamic Characteristics T_J = 25°C unless otherwise specified

Symbol	Parameter	Test Conditions	Min	Typ	Max	Unit
g_{fs}	Forward Transconductance	V_{DS} = 50V, I_D = 60A		117		S
C_{iss}	Input Capacitance	V_{GS} = 0V, V_{DS} = 25V f = 1MHz		23994		pF
C_{rss}	Reverse Transfer Capacitance			245		
C_{oss}	Output Capacitance			2201		
$C_{o(cr)}$ ④	Effective Output Capacitance, Charge Related	V_{GS} = 0V, V_{DS} = 0V to 400V		1170		
$C_{o(er)}$ ⑤	Effective Output Capacitance, Energy Related			606		
Q_g	Total Gate Charge	V_{GS} = 0 to 10V, I_D = 60A, V_{DS} = 300V		598		nC
Q_{gs}	Gate-Source Charge			128		
Q_{gd}	Gate-Drain Charge			251		
$t_{d(on)}$	Turn-On Delay Time	**Resistive Switching** V_{DD} = 400V, I_D = 60A R_G = 2.2Ω⑥, V_{GG} = 15V		134		ns
t_r	Current Rise Time			156		
$t_{d(off)}$	Turn-Off Delay Time			408		
t_f	Current Fall Time			123		

Source-Drain Diode Characteristics

Symbol	Parameter	Test Conditions		Min	Typ	Max	Unit
I_S	Continuous Source Current (Body Diode)	MOSFET symbol showing the integral reverse p-n junction diode (body diode) 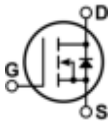				84	A
I_{SM}	Pulsed Source Current (Body Diode)①					447	
V_{SD}	Diode Forward Voltage	I_{SD} = 60A, T_J = 25°C, V_{GS} = 0V				1.2	V
t_{rr}	Reverse Recovery Time	I_{SD} = 60A③ V_{DD} = 100V di_{SD}/dt = 100A/μs	T_J = 25°C			370	ns
			T_J = 125°C			690	
Q_{rr}	Reverse Recovery Charge		T_J = 25°C		2.6		μC
			T_J = 125°C		7.0		
I_{rrm}	Reverse Recovery Current		T_J = 25°C		14.5		A
			T_J = 125°C		20		
dv/dt	Peak Recovery dv/dt	I_{SD} ≤ 60A, di/dt ≤1000A/μs, V_{DD} = 400V, T_J = 125°C				25	V/ns

1 Repetitive Rating: Pulse width and case temperature limited by maximum junction temperature.

2 Starting at T_J = 25°C, L = 2.08mH, R_G = 25Ω, I_{AS} = 60A.

3 Pulse test: Pulse Width < 380μs, duty cycle < 2%.

4 $C_{o(cr)}$ is defined as a fixed capacitance with the same stored charge as C_{OSS} with V_{DS} = 67% of $V_{(BR)DSS}$.

5 $C_{o(er)}$ is defined as a fixed capacitance with the same stored energy as C_{OSS} with V_{DS} = 67% of $V_{(BR)DSS}$. To calculate $C_{o(er)}$ for any value of V_{DS} less than $V_{(BR)DSS}$, use this equation: $C_{o(er)}$ = -3.14E-7/V_{DS}^2 + 7.31E-8/V_{DS} + 2.09E-10.

6 R_G is external gate resistance, not including internal gate resistance or gate driver impedance. (MIC4452)

Microsemi reserves the right to change, without notice, the specifications and information contained herein.

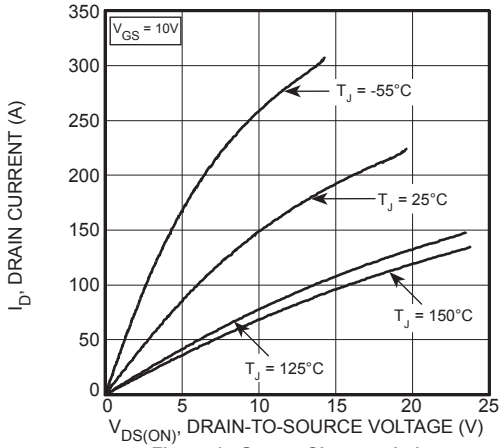

Figure 1, Output Characteristics

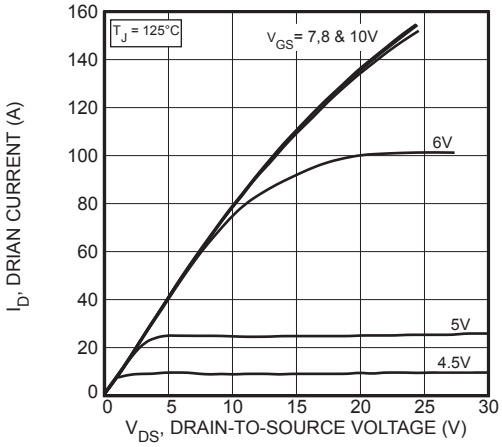

Figure 2, Output Characteristics

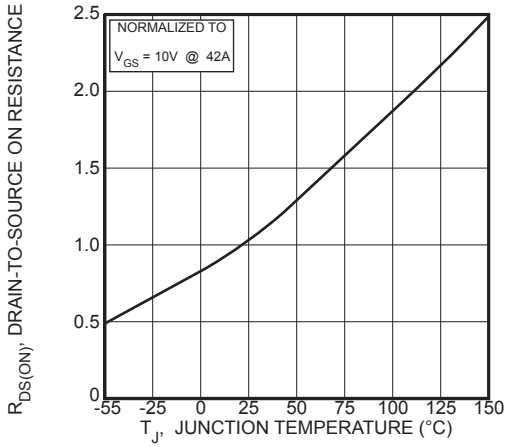

Figure 3, $R_{DS(ON)}$ vs Junction Temperature

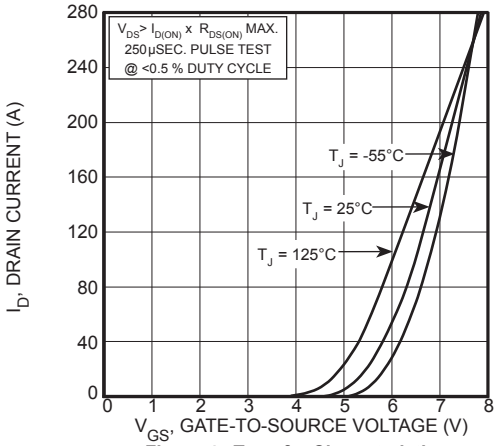

Figure 4, Transfer Characteristics

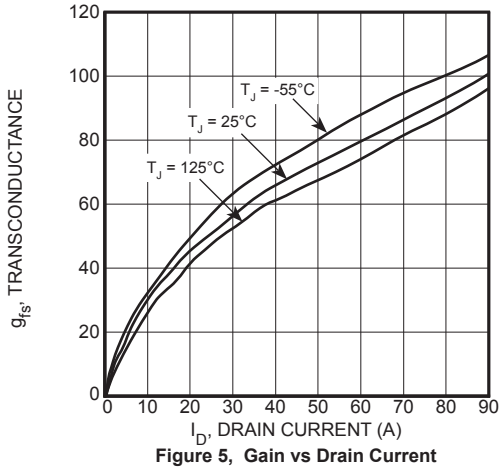

Figure 5, Gain vs Drain Current

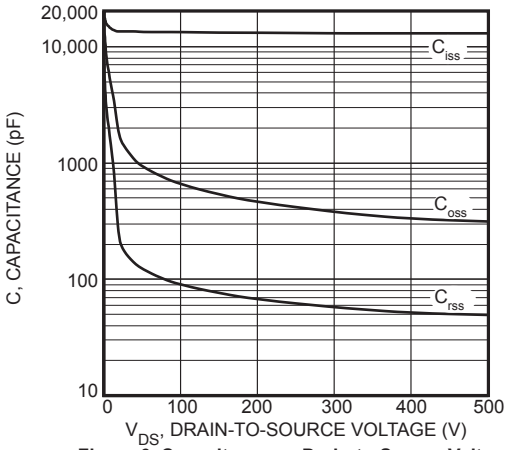

Figure 6, Capacitance vs Drain-to-Source Voltage

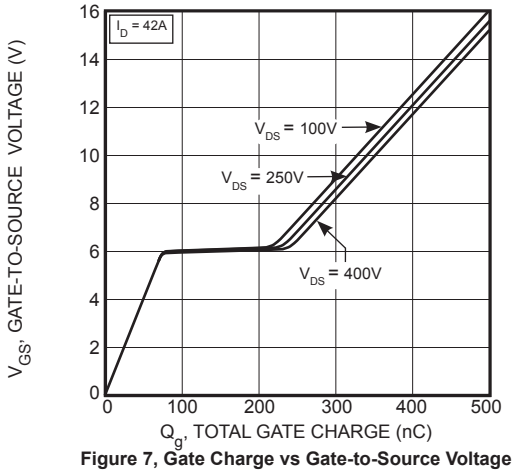

Figure 7, Gate Charge vs Gate-to-Source Voltage

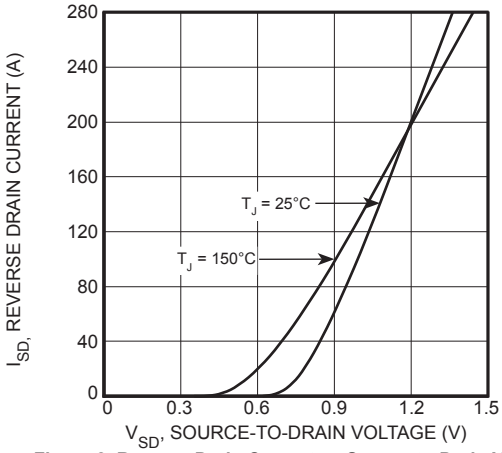

Figure 8, Reverse Drain Current vs Source-to-Drain Voltage

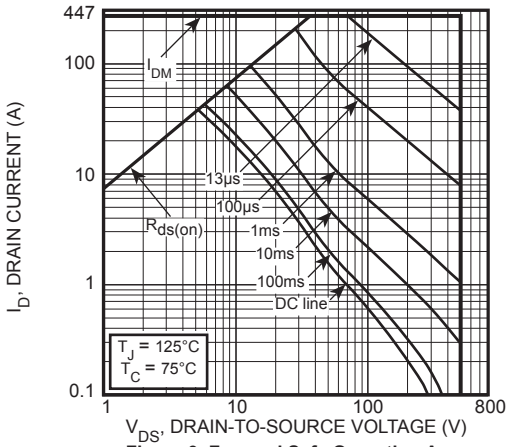

Figure 9, Forward Safe Operating Area

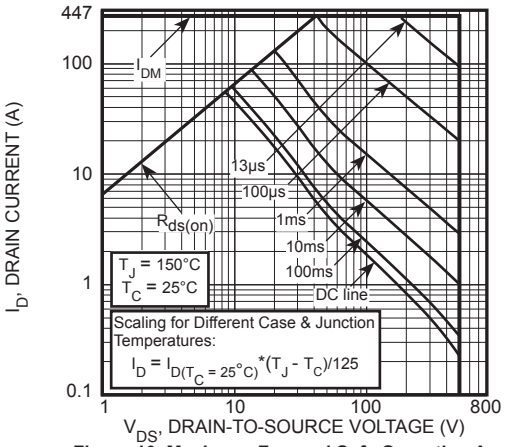

Figure 10, Maximum Forward Safe Operating Area

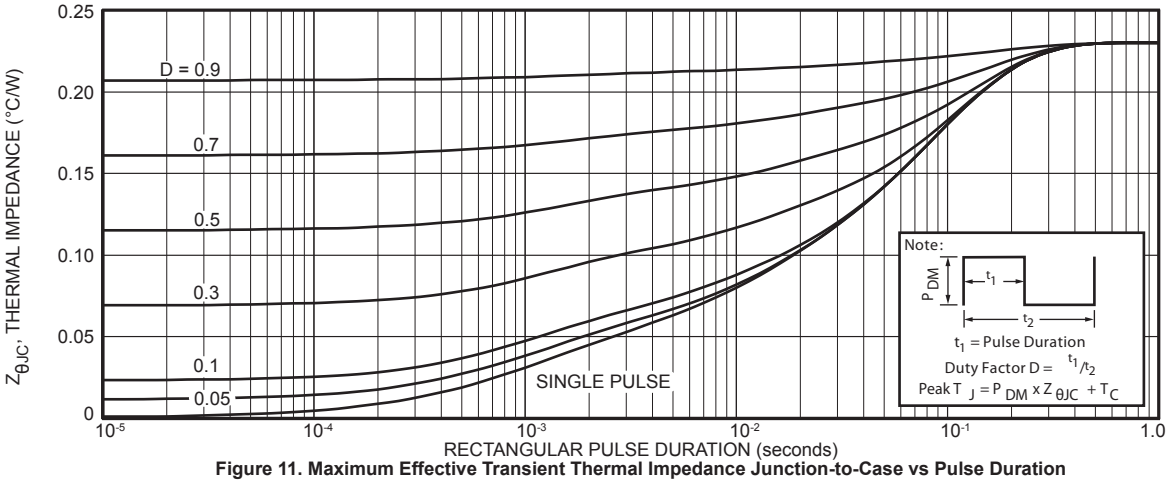

Figure 11. Maximum Effective Transient Thermal Impedance Junction-to-Case vs Pulse Duration

SOT-227 (ISOTOP®) Package Outline

e3 100% Sn Plated

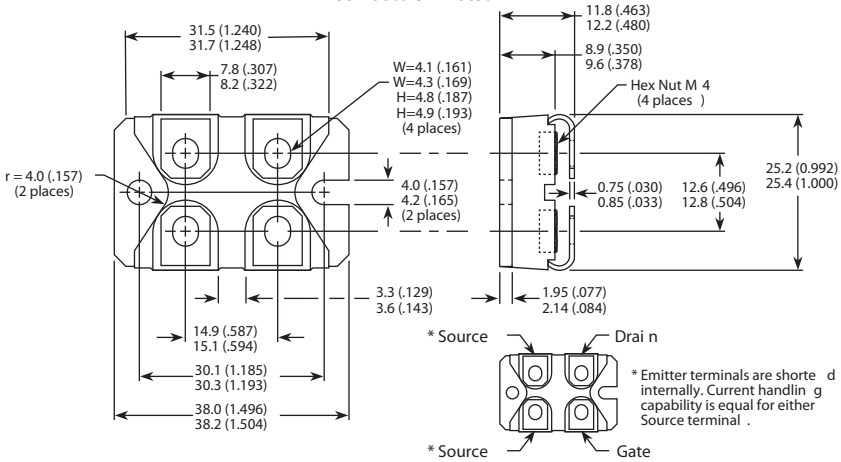

Dimensions in Millimeters and (Inches)