

YAGI ANTENNAS

800/900 MHz

For 800 MHz ESMR and SMR or conventional applications, choose the 4-element PC804N, 6-element PC806N, or 10-element PC8010N. The TE Connectivity PC804N, PC826N, and PC8210N are also available in the 900 MHz GSM frequency band.

FEATURES AND BENEFITS

- All-welded unit construction
- No adjustments ever needed
- Waterproof design
- Stainless steel hardware
- Pigtail mounted N-female connector

APPLICATIONS

- LoRa/ISM
- Public Safety
- Utilities/Smart Grid
- Smart Cities

COMMON SPECIFICATIONS	
Power Handling (W)	200
Elements	6061T6 aluminum rod: 0.63 cm (1/4 in.)
Boom	6061T6 aluminum channel: 1.9 cm (3/4 in.)
Mounting Style	U-bolt
Mounting Size	Maximum mast diameter: 5.4 cm (2-1/8 in.) Pigtail: 48.3 cm (19.0 in.)
Connectivity Type	N-female
Wind Survival – kph (mph)	200 (125)
Wind Survival – ½" ice – kph (mph)	161 (100)

MODEL	FREQ. (MHz)	GAIN (dBd)	NO. OF. ELEMENTS	FRONT-TOBACK RATIO (dB)	-3 dB BEAMWIDTH		WIND SUR-FACE AREA m_2 (ft_2)	LENGTH cm (in.)	WEIGHT lb (kg.)
					E-PLANE	H-PLANE			
PC9013N	902-928	13	13	20	35°	40°	0.043 (0.46)	135.9 (53-1/2)	1.40 (3.12)
PC9010N	928-960	12	10	20	40°	45°	0.035 (0.38)	105.2 (41-7/16)	1.04 (2.31)
PC904N	896-980	6	4	15	70°	100°	0.01 (0.11)	33 (13)	0.50 (1.12)
PC906N	896-940	8.5	6	18	55°	65°	0.024 (0.26)	62.9 (24-3/4)	0.73 (1.62)
PC8910N	896-940	11	10	20	40°	45°	0.035 (0.38)	105.2 (41-7/16)	1.04 (2.31)
PC8010N	806-869	11	10	20	40°	45°	0.035 (0.38)	116.8 (46)	1.10 (2.44)
PC804N	806-902	6	4	15	70°	90°	0.01 (0.11)	33 (13)	0.50 (1.12)
PC806N	806-866	8.5	6	18	55°	65°	0.024 (0.26)	62.9 (24-3/4)	0.76 (1.69)

RADIATION PATTERN

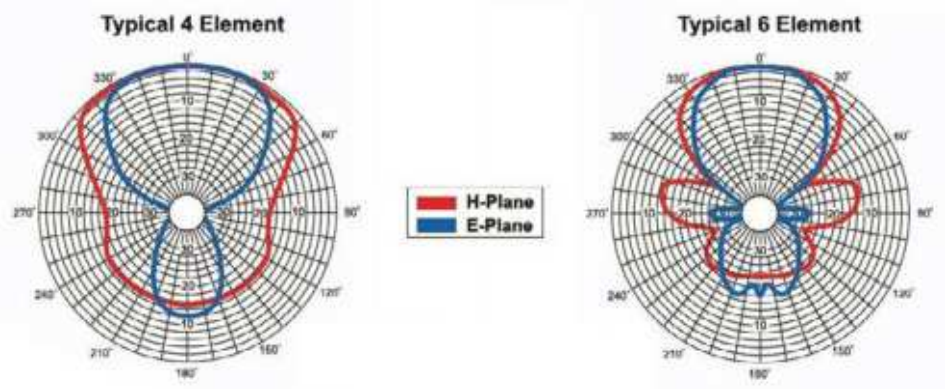

MECHANICAL DRAWINGS

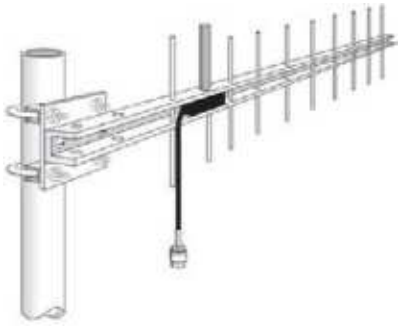

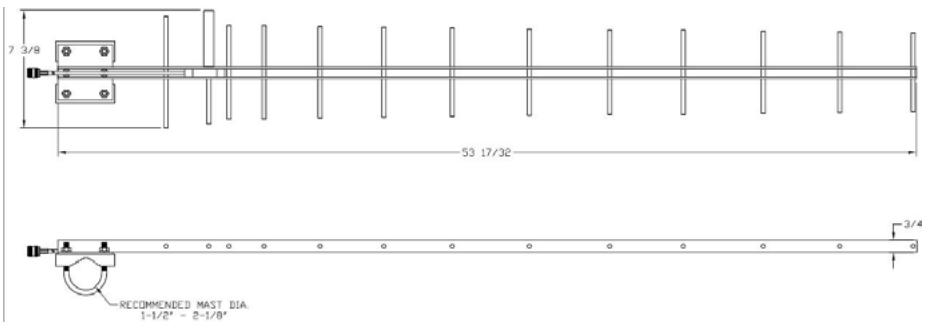

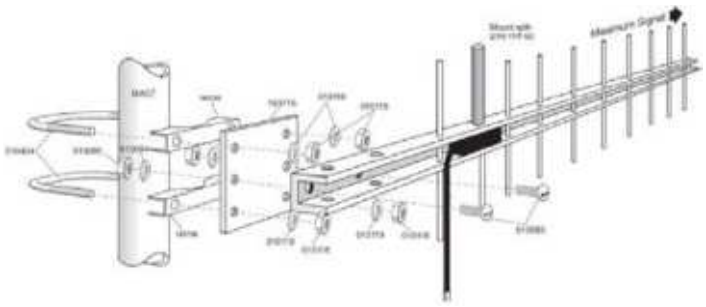

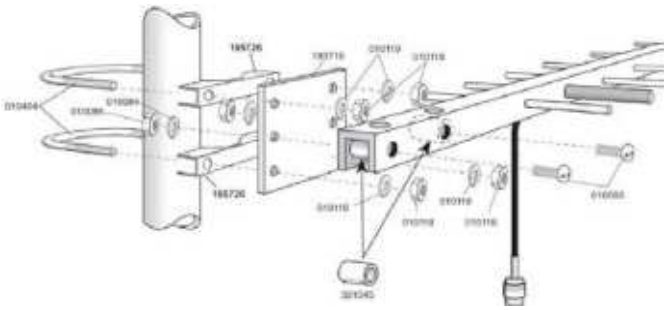

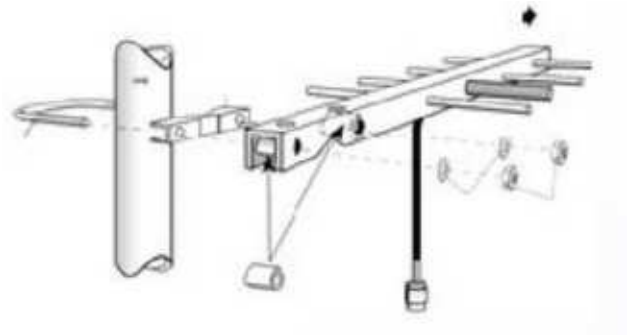

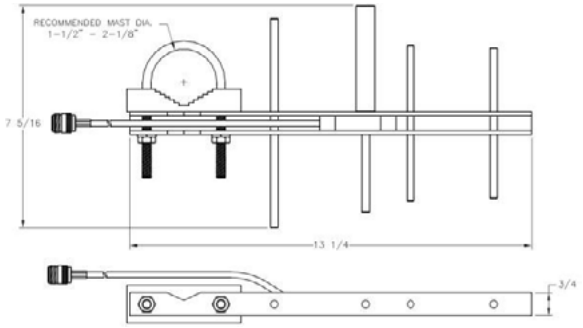

TE TECHNICAL SUPPORT CENTER

USA:	+1 (800) 522-6752
Canada:	+1 (905) 475-6222
Mexico:	+52 (0) 55-1106-0800
Latin/S. America:	+54 (0) 11-4733-2200
Germany:	+49 (0) 6251-133-1999
UK:	+44 (0) 800-267666
France:	+33 (0) 1-3420-8686
Netherlands:	+31 (0) 73-6246-999
China:	+86 (0) 400-820-6015

te.com

TE, TE Connectivity, TE connectivity (logo), and EVERY CONNECTION COUNTS are trademarks owned or licensed by the TE Connectivity plc family of companies. Other product names, logos, and company names mentioned herein may be trademarks of their respective owners.

While TE has made every reasonable effort to ensure the accuracy of the information in this document, TE does not guarantee that it is error-free, nor does TE make any other representation, warranty or guarantee that the information is accurate, complete, correct, reliable or current. TE reserves the right to make any adjustments to the information contained herein at any time without notice. TE EXPRESSLY DISCLAIMS ALL IMPLIED WARRANTIES REGARDING THE INFORMATION CONTAINED HEREIN, INCLUDING, BUT NOT LIMITED TO, ANY IMPLIED WARRANTIES OF MERCHANTABILITY OR FITNESS FOR A PARTICULAR PURPOSE. In no event will TE be liable for any direct, indirect, incidental, special or consequential damages arising from or related to recipient's use of the information. It is the sole responsibility of recipient of this information to verify the results of this information using their engineering and product environment. Recipient assumes any and all risks associated with the use of the information. Antenna performance may vary. TE is a component manufacturer, and customer and/or end-user is responsible for all end-use compliance and regulatory requirements.

©2025 TE Connectivity. All Rights Reserved.

05/25 Original