CIRCULAR PLASTIC CONNECTORS

FOR COMMERCIAL SIGNAL & POWER APPLICATIONS

APPLICATIONS FOR CIRCULAR PLASTIC CONNECTORS

CONTROL CABINET

ROBOTICS

MOLDING MACHINE

MACHINE TOOL

Circular Plastic Connectors are rugged, cost-effective connectors that can be used to provide power input and output to and from devices. Common applications are energy management systems, power generators, material handling, agriculture equipment, battery management systems, industrial machinery, rolling stock, forklifts, welding equipment, robotics, construction equipment, power supplies, industrial scales and weighting, etc.

The use of Circular Plastic Connectors enables customers to reduce installation time, meet harsh and space saving requirements, design with high-performance materials, and speed up their go-to-market plans.

Note: All part numbers are RoHS Compliant.

Introduction

Product Facts

- Lightweight, all-plastic and metal-shell connectors
- CPC connectors are UL 94V-0 rated and made of stabilized, heat resistant, self extinguishing thermoplastic material
- Metal-shell CPC connector housings made of UL 94V-0 rated thermoplastic
- Operating temperature range: -40°C to +105°C
- Available in panel or chassis mount and free-hanging configurations
- Quick connect/disconnect capability with thread assist, positive detent coupling
- Built-in pin and socket protection
- Polarized for proper mating of connector halves
- Special connector configurations offer special solder and posted contacts, special receptacles with or without threaded inserts
- Full complement of optional accessories
- Recognized under the Component Program of Underwriters Laboratories Inc. (VAC, RMS or VDC, Service): Series 1 600 V, Series 2 250 V, Series 3 600 V, Series 4 600 V, Series 5 250 V, Series 6 250 V, File No. E28476
- Certified by Canadian Standards Association, File No. LR 7189
- Produced under a Quality Management System certified to ISO 9001
  A copy of the certificate is available upon request.
- Certain products meet VDE Standard 062

Six connector series for different interconnection requirements:

- Series 1 – Standard density, signal and low-current applications using durable Multimate contacts (.062 [1.57] pin diameter)
- Series 2 – High density applications using Size 20 DM and 20 DF contacts (.040 [1.02] pin diameter)
- Series 3 – Low density, power applications with Type XII contacts capable of carrying up to 25 amperes of current
- Series 4 – Combination of standard and power density application with Type III+ and Type XII contacts
- Series 5 – Power density application with Size 8 screw machined and precision formed contacts
- Series 6 – Combination of standard and power density application with Type III+ and Size 8 contacts

MIL-C-5015 Style Circular Plastic Connectors (CPC) Product Facts

- Intermateable with metal-shell sizes 20-14 and 18-10, MIL-C-5015 style connectors
- High impact resistant plastic housing made of UL 94V-0 rated material
- Lightweight
- Lower cost than standard MIL-C-5015 connectors
- Industry accepted Type III+ pin and socket contacts, available on reels in strip form for high volume, low cost, automatic machine terminations, or in loose piece form for low volume, prototype or maintenance and repair
- Improved alignment (U.S. Standard MIL-C-5015 Connectors) prevents mismating with other housing insert arrangements
- Recognized under the Component Program of Underwriters Laboratories Inc., File No. E28476
- Certified by Canadian Standards Association, File No. LR 7189

Miniature CPC Connectors Product Facts

- Compact, high contact density, environmentally sealed connectors
- Uses existing Mini-Universal MATE-N-LOK stamped and formed pin and socket contacts
- Two shell sizes – available in 1 to 4 and 5 to 9 position configurations

Need more information?
Call technical support.
They are staffed with specialists well versed in TE Connectivity products. They can provide:

- Technical support
- Catalogs
- Technical documents
- Product samples
- Authorized TE Connectivity Distributor Locations

© 1973, 1975, 1976, 1978, 1981, 1983, 1985, 1989, 1990, 1991, 1992, 1995, 1996, 1999, 2000, 2001, 2002, 2004, 2006 and 2007 by TE Connectivity Corporation. All Rights Reserved.

AMP, AMPOMATOR, AMP-O-LECTRIC, AMP-O-MATIC, AMP-TAPETRONIC, CERTI-CRIMP, COAXICON, MATE-N-LOK, POWERBAND, PRO-CRIMPER and TYCO are trademarks.

TETRASEALS is a trademark of Parker Hannifin Corporation.

Other products, logos, and Company names mentioned herein may be trademarks of their respective owners.

Product Environmental compliance and sustainability is embedded into the design process from the product ideation phase and continuing throughout the production process and is an important element of conducting our business in an environmentally friendly manner which meets both global environmental legislation and related customer content requirement for products purchased from TE Connectivity. We take environmental compliance very seriously and strive to understand, through our global network of compliance experts, the ever evolving impact of new and changing legislation (e.g., RoHS2 (Dir. 2011/65 EU) as well as obligations regarding REACH or Registration, Evaluation, Authorization and Restriction of Chemicals, (Reg (EC) No 1907/2006 and amendments). These two key EU based directives, are just two of the many other significant environmental laws and related restrictions impacting the electronics industry which are met every day across our vast portfolio, irrespective of where the product may be manufactured around the globe; both by TE Connectivity or by our valued suppliers. We at TE Connectivity understand and appreciate that product environmental compliance is important to you and so we have structured our compliance web site in a user-friendly manner that will allow you to explore selected key topics, some of which are listed here, should you require further information.

Disclaimer:
Not all TE Connectivity products meet RoHS, as some industries – (Mil-Aero, for instance), require lead containing product in certain applications. Additionally, some product is classified as "out-of-scope" such as hand tools, non-electrical accessories, marketing literature, etc. Products in this catalog are RoHS compliant unless indicated otherwise.

You can access the TE product compliance support center at:
te.com/usa-en/utilities/product-compliance.html
for access to related information such as:

- ✔ Check product compliance/ get Statements of Compliance (SoC's)
- ✔ Safety Data Sheets/ Download SDS's
- ✔ Restriction of Hazardous Substances (RoHS2)
- ✔ More on REACH legislation and Substance Communications Documents (RSCD's)
- ✔ Conflict minerals
- ✔ Related customer letters: RoHS/REACH/Substances in TE Connectivity Products/ PAH, DMF
- ✔ E-waste recycling
- ✔ Regulatory resources and more

Dimensions are in inches and millimeters unless otherwise specified. Values in brackets are metric equivalents.
Dimensions are shown for reference purposes only. Specifications subject to change.

Table of Contents

Introduction 1

Table of Contents 2, 3

Connector Series and Types 4, 5

Performance Characteristics 6

Internal Protection (IP) Codes 7

Current Carrying Capabilities 8

Circular Plastic Connectors (CPC) 9

Contact Arrangements 10, 11

CPC, Series 1

Cable or Panel Mount 12
Cable or Panel Mount, VDE Tested 13
Square Flange Receptacles, Printed Circuit Board Mount 14, 15
Special CPC Connectors, Square Flange Receptacles, Printed Circuit Board Mount 15
Special CPC Connectors, Square Flange Receptacles 16
Special CPC Connectors, Feed-Thru 16
Square Flange Receptacles, Right-Angle, Posted 17, 18
Signal Contacts, Type III+ 19-22
Signal Contacts, Type II 23
Contact Arrangements 24
Component Dimensions 25

CPC, Series 2

Cable or Panel Mount 26
Receptacles, Printed Circuit Board Mount 27
Special CPC Connectors 28
Signal Contacts, Size 20 DF, Precision Formed, Crimp 29
Signal Contacts, Size 20 DM, Screw-Machined, Crimp 30
Signal Contacts, Type 20 DF, Solder Contacts 30
Contact Arrangements 31
Component Dimensions 32

CPC, Series 3

Plugs and Receptacles 33
Power Contacts, Type XII, Precision Formed, Crimp 34
Power Contacts, High Current Type XII, Crimp and Contact Arrangements 35
Component Dimensions 36

CPC, Series 4

Plugs and Receptacles, Standard Sex and Contact Arrangements 37
Component Dimensions 38

CPC Connector Accessories

Cable Clamps 39
Self-Centering Cable Clamp (Shell Size 23) and Right-Angle Cable Clamps 40
Back-Shell Extender (Shell Size 23) and Panel Mount Flanges (Plugs only) 41
Flexible Cable Boot and Internal Cable Grip (Shell Size 11) 42
Flexible Cable Boot and Internal Cable Grip (Shell Size 17) 42
Keying Plugs 43

Sealed CPC Connectors

One-Piece Sealed Circular Plastic Connectors, Introduction . . . 44
- .125 POWERBAND Contacts . . . 45
- One-Piece Sealed CPC Receptacles, Special Series 1 . . . 46
- One-Piece Sealed CPC, Series 5, Reverse Sex and One-Piece Sealed CPC, Series 6 . . . 47
- Component Dimensions, Series 1, 5 & 6 . . . 48

UV-Resistant Sealed Circular Plastic Connectors, Introduction . . . 49
- UV-Resistant One-Piece Sealed CPC Receptacles, Special Series 1 . . . 50
- UV-Resistant One-Piece Sealed CPC, Series 5, Reverse Sex and One-Piece Sealed CPC, Series 6 . . . 51
- Component Dimensions, Series 1, 5 & 6 . . . 52

Two-Piece Sealed Circular Plastic Connectors, Introduction . . . 53
- Two-Piece Sealed CPC, Series 5, Reverse Sex . . . 54
- Two-Piece Sealed CPC, Series 6, Reverse Sex . . . 55
- Two-Piece Sealed CPC Receptacles, Special Series 1 . . . 56

Two-Piece CPC Sealing Accessories and One-Piece or Two-Piece Sealed CPC Sealing Accessories . . . 57

CPC Connector Sealing Accessories

Sealing Caps (Receptacles only) and Cable Entry Seals . . . 58
Jacketed Cable Seals (Shell Size 23) and Rubber Boot . . . 59

MIL-C-5015 Style Circular Plastic Connectors

Introduction . . . 60
Plugs and Receptacles (Shell Size 20-14 and Shell Size 18-10) . . . 61
Type III+ Contacts . . . 62

Miniature CPC Connectors

Introduction . . . 63
Receptacles and Plugs, Shell Size 8 (4 Position shown) . . . 64
Receptacles and Plugs, Shell Size 11 (9 Position shown) . . . 65
Contacts and Application Tooling and Accessories (All accessories must be ordered separately.) . . . 66

Metal-Shell Circular Plastic Connectors

Introduction . . . 67
Receptacles and Plugs, Series 1, Standard Sex . . . 68
Receptacles and Plugs, Series 1, Reverse Sex . . . 69
Contact Arrangements, Series 1 . . . 70
Receptacles and Plugs, Series 2, Standard Sex . . . 71
Receptacles and Plugs, Series 2, Reverse Sex . . . 72
Contact Arrangements, Series 2 . . . 73
Receptacles and Plugs, Series 3, Standard Sex . . . 74
Receptacles and Plugs, Series 3, Reverse Sex . . . 75
Contact Arrangements, Series 3 . . . 76
Receptacles and Plugs, Series 4 . . . 77
Contact Arrangements, Series 4 . . . 78
Component Dimensions, Series 1, 2, 3 & 4 . . . 79

Metal-Shell CPC Connector Accessories

Cable Clamps, Cable Entry Seals and Protective Cap Assemblies . . . 80

Application Tooling

Manual Hand Tools and Electric Machine for Interchangeable Die Sets . . . 81
Pneumatic Hand Tool for Interchangeable Die Sets and Crimp Machines . . . 82
Applicators, Stripper-Crimper Machines and Lead Makers . . . 83

Technical Documents

84

Part Number Index

Products . . . 85-87
Tooling . . . 87
Cross Reference (Non-Compliant to RoHS Compliant) . . . 88

Connector Series and Types

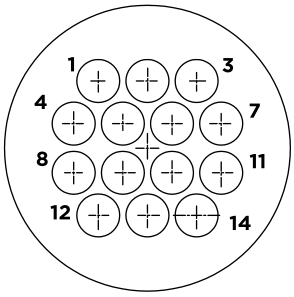

Series 1 – Size 16 Contacts

Series 1 connectors permit the use of multiple combinations of signal and coaxial circuits in the same housing by accepting durable Multimate contacts. These pin and socket contacts include Type III+ and subminiature coaxial contacts, interchangeable in the same Multimate contact cavity. Type III+ contacts (.062 [1.57] pin diameter) are capable of carrying a maximum of 13 amperes when crimped in wire. Type III solder contacts and posted contacts for pc board applications are also available. Many connector arrangements offer both standard and reverse sex contact loading – **from 4 thru 37 positions.**

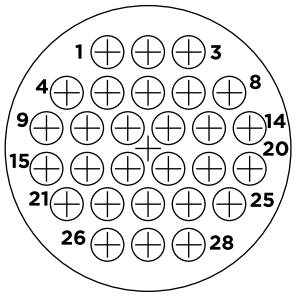

Series 2 – Size 20 Contacts

Series 2 connectors accept Size 20 DF (precision formed) and Size 20 DM (screw-machined) pin and socket contacts with a .040 [1.02] pin diameter, Size 20 DF contacts are available in crimp and solder versions, as well as a posted version for wrap-type and pc board applications. Maximum current carrying capability is 7.5 amperes. Many connector arrangements offer both standard and reverse sex contact loading – **from 8 thru 63 positions.**

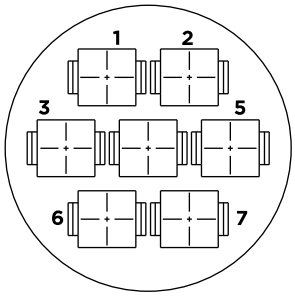

Series 3 – Power Contacts

Series 3 connectors accept Type XII power contacts which can carry up to 25 amps per contact. These contacts will accommodate a wire size range of 16 to 10 AWG [1.4 to 5 mm^2]. Two connector sizes are available in both standard and reverse sex connector arrangements **3 and 7 positions.**

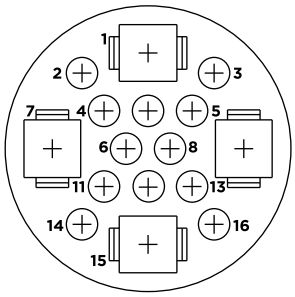

Series 4 – Combination, Size 16 and Power Contacts

Series 4 connectors accept Size 16 Multimate and Type XII power contacts, combining the signal and coaxial circuit capabilities of Series 1 connectors with the power circuit capabilities of Series 3 connectors. Available in three connector sizes offering power mixing combinations totaling **13, 16 and 22 positions.**

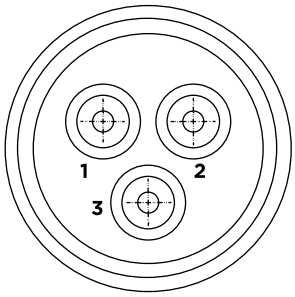

Series 5 – Power Contacts .125 POWERBAND

Series 5 connectors combine the revolutionary performance of the new AMP POWERBAND Contact, high current contact in configurations similar to the Series 3 connectors. AMP POWERBAND contacts offer the electrical performance of the best Mil Spec Size 8 screw-machined contacts with the economy and productivity of strip-fed, precision formed contacts.
Series 5 connectors are environmentally sealable to meet IEC IP 65 and IP 67 specifications. Rated at 250 VAC or VDC, 50 amperes maximum in a single contact, the connectors are available in free-hanging and panelmount applications – **one connector configuration containing three .125 POWERBAND contacts.**

Note: All part numbers are RoHS Compliant.

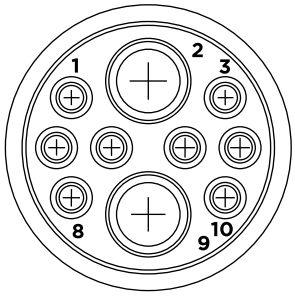

Series 6 – Combination, Size 16 and .125 POWERBAND Contacts

Series 6 combines the high current and environmental sealing capability of Series 5, POWERBAND contacts, and the reliability of signal carrying, low current Type III+ contacts. This combination of power and signal contacts is offered in **one connector configuration containing two .125 POWERBAND contacts and eight Type III+ signal pin and socket contacts.**

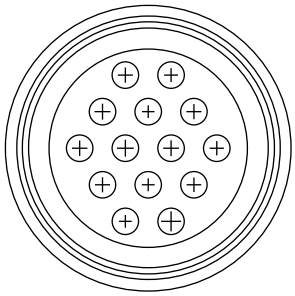

MIL-C-5015 Style – Size 16 Contacts

This new addition to the AMP Circular Plastic Connector Line is specifically designed to be **intermateable with Metal-Shell size 20-14 and 18-10, MIL-C-5015 Style connector systems.** The high impact resistant plastic housing offers the advantages of light weight and lower cost than existing metal-shell connectors. In addition the connector design prevents mismating when used with other insert arrangements. As part of the AMP Multimate family of connectors, the MIL-C-5015 style connector offers the economies of crimp Type III+ pin and socket contacts in reel-mounted, strip-form for high volume automatic machine termination, as well as in loose piece-form for low volume, prototype or maintenance and repair.

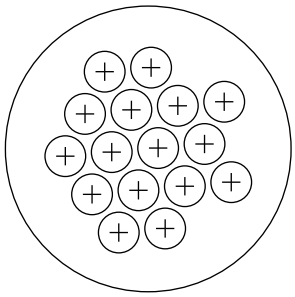

Metal-Shell, Circular Plastic Connectors

Metal-Shell CPC connectors consist of a black thermoplastic insert in a nickel-plated, zinc alloy shell. These connectors are currently available in **shell sizes 14, 22 and 28, and in two basic configurations consisting of plugs and square flange receptacles.**

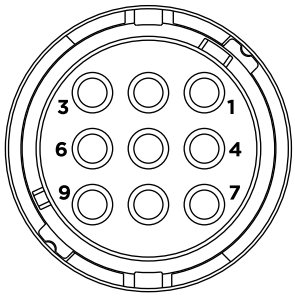

Miniature CPC Connectors

These compact connectors accept existing Mini-Universal MATE-N-LOK pin and socket contacts, 30-22 AWG [.05-.3 mm^2]. Two shell sizes (8 or 11) are available, accommodating **from 1 to 4 and 5 to 9 positions.** Featuring high contact density and IP67 sealing, these durable connectors are well suited for many wire-to-wire and wire-to-panel applications.

Dimensions are in inches and millimeters unless otherwise specified. Values in brackets are metric equivalents.
Dimensions are shown for reference purposes only. Specifications subject to change.

Performance Characteristics

CPC and Metal-Shell CPC Connectors

108-1579
Sealed CPC Connectors with Removable Contacts

108-2079
Miniature CPC Connectors

108-10024
CPC Connectors

108-10024-2
(Series 1)

108-10024-3
(Series 2)

108-10024-4
(Series 3 & 4)

108-10037
Contacts, Type XII

108-10040
Metal-Shell CPC Connectors

108-10042
Contacts, Type III +

108-40005
Contacts, Size 20 DF

Test Description	Procedure	Requirements
Maintenance Aging	Contacts removed and reinserted 10 times using applicable tools	No damage to contacts or housings. Contact retention maintained
Contact Retention	Axial load applied to contact to displace to the rear of the connector	Contacts remain in place when subjected to a minimum 10 lb. load*
Dielectric Withstanding Voltage (MIL-STD-1344, Method 3001)	Connectors subjected to 1500 volts rms at sea level	No breakdown or flashover
Thermal Shock	Connectors subjected to five cycles of temperature change (-55°C to +125°C)	No damage
Vibration (MIL-STD-202, Method 204, Test Condition B)	Connectors vibrated (wired and mated). Contacts wired in series with 100 milliamperes flowing during the test	No damage or loosening of parts. No interruption of electrical continuity longer than 10 microseconds
Physical Shock (MIL-STD-202,Method 213A, Test Condition A)	Connectors shocked 50 G (wired and mated). Contacts wired in series with 100 milliamperes flowing during the test	No damage or loosening of parts. No interruption of electrical continuity longer than 10 microseconds
Durability	Connectors mated and unmated 25 times with tin plated contacts and 500 times with gold plated contacts	No wear through damage to plating
Protection Against Solids	a. Test wire is pushed into mated connectors b. Mated connectors subjected to circulating talcum powder	a. Must not touch live parts b. No dust deposits observed on mating surfaces
Protection Against Water	Water is projected through jets against mated connector from any direction and then temporarily immersed in water	No water deposits shall be observed on mating surfaces of contacts or housings
Temperature Life	Mated connectors subjected to a temperature of +125°C for 200 hours	No damage
Insulation Resistance (MIL-STD-1344, Method 3003)	Measurement made between adjacent contacts with connector mated	5000 megohms minimum ambient temperature
Humidity (MIL-STD-202, Method 103, Test Condition B)	Mated connectors subjected to 10 days moisture test	Minimum insulation resistance of 100 megohms

* For size 16 contacts. Size 8 contacts 25 lb. load, min.

Note: All part numbers are RoHS Compliant.

Levels of Protection for Electric Operating Material

According to IEC 60529 and IEC 60947, Appendix C

Internal Protection (IP) Definition:

- **Per IEC 60947, Appendix C –** Pertains to low voltage switchgear and control gear.
- **Per IEC 60529 –** Pertains to degrees of protection provided by enclosures (IP code).

Sample Designation:

(Where x is a numeral value), i.e. IP 65

IP Codes

IP Index Letter	X_1 Degree of Protection against ingress of solid foreign objects		X_2 Degree of Protection against ingress of water	
	Degree of Protection, X_1	**Protection against ingress of solid foreign objects**	**Degree of Protection, X_2**	**Protection against ingress of water**
	0	No Protection	0	No Protection
	1	Protection against objects >50mm diameter – including inadvertently touched by hands	1	Vertical Dripping – Protection against vertical drops of water
	2	Protection against objects >12.5mm – including fingers	2	Dripping <15° – Protection against dripping water when the enclosure is tilted 15° from vertical
	3	Protection against objects >2.5mm diameter including tools	3	Spraying at an angle up to 60° from vertical
	4	Protection against objects >1.0mm diameter – including grains	4	Splashing – Protection against water splashed from any direction
	5	Protection against ingress of solid foreign bodies	5	Jetting – Protection against water stream out of a nozzle, from any direction
	6	Protection against ingress of dust	6	Powerful Jetting – Protection against temporary flooding due to powerful jet streams out of a nozzle from any direction
			7	Temporary immersion – Protection against temporary immersion

Dimensions are in inches and millimeters unless otherwise specified. Values in brackets are metric equivalents.
Dimensions are shown for reference purposes only. Specifications subject to change.

Current Carrying Capabilities

The total current capacity of each contact in a given connector is dependent upon the heat rise resulting from the combination of electrical loads of the contacts in the connector arrangement and the maximum ambient temperature in which the connector will be operating. Caution must be taken so that this combination of conditions does not cause the internal temperature of the connector to exceed the maximum operating temperature of the housing material. Several variables which must be considered when determining this maximum current capability for your application are:

Contact Current Guide Maximum Current (Amperes) for Largest Wire Size

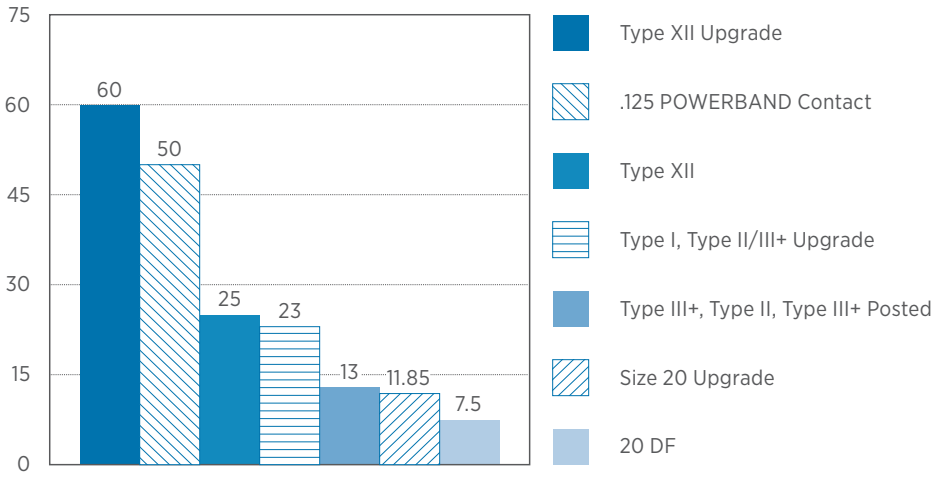

- **Wire Size –** Larger wire will carry more current since it has less internal resistance to current flow and generates less heat. The wire also conducts heat away from the connector.
- **Connector Size –** In general, with more circuits in a connector, less current per contact can be carried.
- **Current Load Distribution –** Spreading those lines with greater current loads throughout the connector, particularly around the outer perimeter, will enhance heat dissipation.
- **Ambient Temperature –** With higher ambient temperatures, less current can be carried.

Contact Selector Chart

Connector Type	20 DF	Type II	Type III+	Posted Type III+	Type XII	POWERBAND Contacts
CPC Series 1		✔	✔	✔		
CPC Series 2	✔					
CPC Series 3					✔	
CPC Series 4		✔	✔		✔	
CPC Series 5						✔
CPC Series 6		✔	✔			✔
CPC 5015			✔			
CMC Series 1		✔	✔	✔		
CMC Series 2	✔					
CMC Series 3					✔	
CMC Series 4		✔	✔		✔	

Note: All part numbers are RoHS Compliant.

Circular Plastic Connectors (CPC)

CPC comes in six different series to allow you to choose the product best suited to your design requirements

- **Series 1** – Standard Density: Signals up to 13 A (also available in Sealed)
- **Series 2** – High Density: Signals up to 7.5 A
- **Series 3** – Power Density: Power up to 25 A
- **Series 4** – Power and Signal Combination: Signals up to 13 A, Power up to 25 A
- **Series 5** – Power (Sealable): Power up to 50 A
- **Series 6** – Power and Signal Combination (Sealable): Signals up to 13 A, Power up to 50 A

Series 1 (Sealed), 5 and 6 now available in F1 rated material

Circular Plastic Connectors (CPC) enable engineers to design rugged products quickly and affordably by offering a versatile range of power and signal connectivity solutions

Meet rugged and space-saving requirements
- UL94V-0 stabilized heat resistant plastic housings and variants.
- Design for either IP65 or IP67 sealing when needed.
- Eliminate rectangular connector waste when space saving is critical.

Speed up go-to-market and reduce installation time
- Select from a broad portfolio to move from idea to design to production faster.
- Quickly pair power and signal for a variety of input and output requirements when a hybrid approach is needed.
- Select the best contact termination based on application – not the connector. (Hand, semi-automated or automatic termination tooling)

Design with cost-effective, high-performance materials and configuration
- Leverage the lightweight, all-plastic shell as a lower cost alternative to metal.
- Eliminate the cost of hand tools for mating with the connect-disconnect polarized housings.
- Make repair easy with less downtime with removable crimp contacts and replaceable coupling rings.

Circular Plastic Connectors (CPC) offer a rugged, reliable connector system suitable for a wide range of applications. CPC is UL Recognized (File No. E28476) and CSA Certified (File No. LR 7189)

- Industrial machinery, factory automation; material handling equipment
- Rail and transit vehicles and systems
- Medical instrumentation & equipment
- Communication equipment, networking, data storage, computers & peripherals
- HVAC, Commercial and building equipment
- Lighting and signage
- Motor vehicles - auto/bus/truck; off-road and recreational vehicles; agricultural machinery; construction equipment
- Aerospace and defense equipment and systems

Dimensions are in inches and millimeters unless otherwise specified. Values in brackets are metric equivalents.
Dimensions are shown for reference purposes only. Specifications subject to change.

Contact Arrangements

CPC Plastic

Shell Size	Series 1 7-17 A/600 V, Signal	Series 2 1.4-8.3 A/250 V, Signal	Series 3 33-47 A/600V, Power
11	 11-4	 11-8 11-9	
13	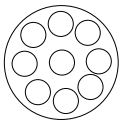 13-9		
17	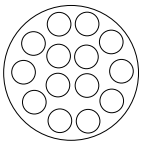 17-14 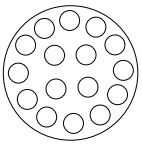 17-16	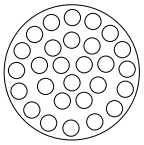 17-28	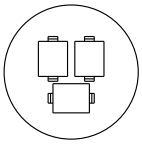 17-3
23	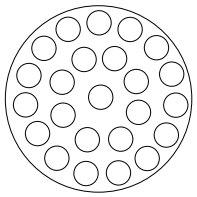 23-24 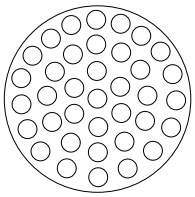 23-37	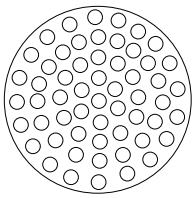 23-57 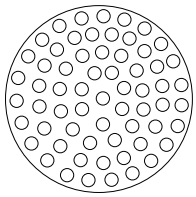 23-63	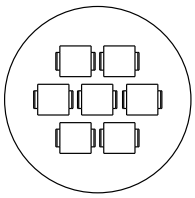 23-7

Metal CPC

Shell Size	Series 1 7-17 A/600 V, Signal	Series 2 1.4-8.3 A/250 V, Signal	Series 3 33-47 A/600V, Power
14	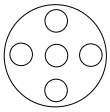 14-5 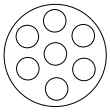 14-7		
22	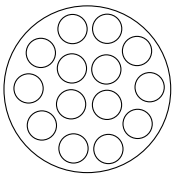 22-14 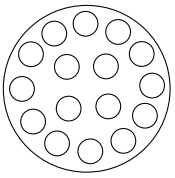 22-16	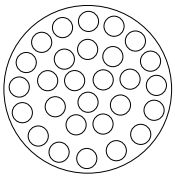 22-28	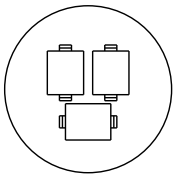 22-3
28	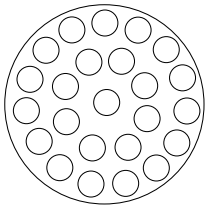 28-24 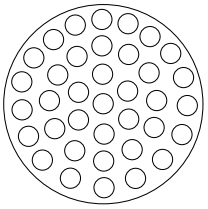 28-37	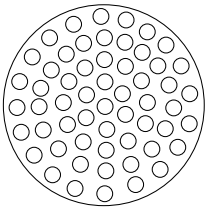 28-57 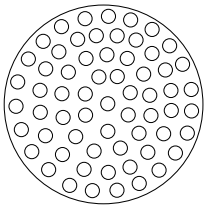 28-63	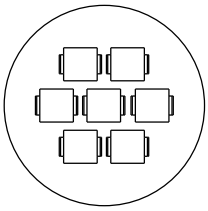 28-7

Note: All part numbers are RoHS Compliant.

Series 4 23 A/600V, Power+ Signal	Series 5 39-50 A/250V, Power	Series 6 50 A/600V, Power+ Signal
	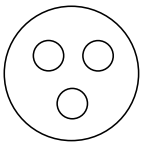 17-3	
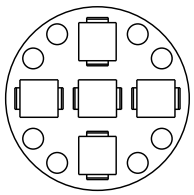 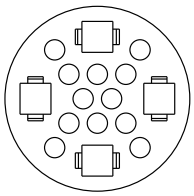 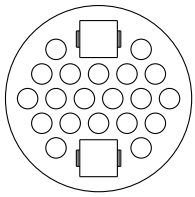 23-13 23-16 23-22		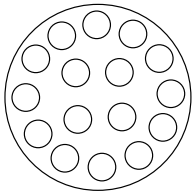 23-16

Series 4 23 A/600V, Power+ Signal
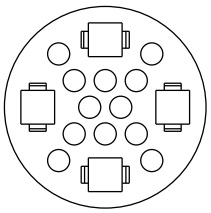 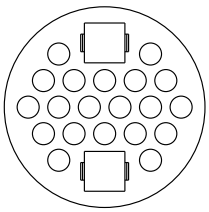 28-16 28-22

Miniature CPC 5-13 A/250 V					
Shell Size					
8	 8-1	 8-2	 8-3	 8-4	
11	 11-5	 11-6	 11-7	 11-8	 11-9

Mil CPC	
Shell Size	
18	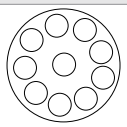 18-10
20	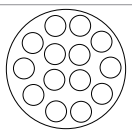 20-14

Dimensions are in inches and millimeters unless otherwise specified. Values in brackets are metric equivalents.
Dimensions are shown for reference purposes only. Specifications subject to change.

Cable or Panel Mount

(Accepts Type III+, High Current Power and Type II Contacts)

Square Flange Receptacle

Free-Hanging Receptacle

Plug

Listed part numbers are for connectors only; **contacts must be ordered separately.**

Standard Sex Connectors (Receptacles accept pin contacts, Plugs accept socket contacts)

Arrangement		Keying	Square Flange Receptacle		Free-Hanging Receptacle	Plug
Shell Size	No. of Positions		With Threaded Inserts[1]	With Mounting Holes		
11-4		A	208130-1	206061-1	206153-1	206060-1
13-9		A	208131-1	206705-1	206705-2	206708-1
17-16		A	206036-8	206036-1	206036-3	206037-1
		B	—	213862-1	—	213849-1
23-24		A	211839-1	206838-1	206838-2	206837-1
		B	—	213866-1	—	213851-1
23-37		A	787610-1	206151-1	206151-2	206150-1
		B	—	213860-1	—	213848-1

[1] Four 4-40 threaded inserts per receptacle.

Reverse Sex Connectors (Receptacles accept socket contacts, Plugs accept pin contacts)

Arrangement		Keying	Square Flange Receptacle		Free-Hanging Receptacle	Plug
Shell Size	No. of Positions		With Threaded Inserts[1]	With Mounting Holes		
11-4		A	211102-1	206430-1	206430-2	206429-1
17-14		A	211103-1	206043-1	206043-3	206044-1
		B	—	796437-2	—	796449-1
23-37		A	206306-5	206306-1	206306-2	206305-1
		B	—	213864-1	—	213850-1

[1] Four 4-40 threaded inserts per receptacle.
Key Style "A" is the Standard 5 Locating Key arrangement. Key Style "B" is the 4 Locating Key arrangement.

Replacement Coupling Rings

Shell Size	Part No.
11	213811-1
13	213813-1
17	213810-1
23	213812-1

Material

Housing – Thermoplastic, 94V-0 rated, black

Related Product Data

Contacts – Pages 19-23
Contact Arrangement – Page 24
Component Dimensions – Page 25*
Accessories – Pages 39-43, 58-59
Performance Characteristics – Page 6
Application Tooling – Pages 81-83
Technical Documents – Page 84

Keying

Molded-in keying in two configurations:

A – Standard Configuration: 5 Keys

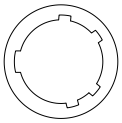

B – Optional Configuration: 4 Keys to prevent mismating of standard and reverse sex.

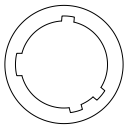

Note: All part numbers are RoHS Compliant.

Cable or Panel Mount, VDE Tested

(Accepts Type III+, High Current Power and Type II Contacts)

Square Flange Receptacle

Plug

- Designed to meet requirements of VDE as shown in DIN Specification 57627
- Recognized under the Component Program of Underwriters Laboratories Inc. for 600 VAC and 600 VDC service, File No. E28476
- Certified by Canadian Standards Association, File No. LR 7189

Listed part numbers are for connectors only; **contacts must be ordered separately.**

Standard Sex Connectors (Receptacles accept pin contacts, Plugs accept socket contacts)

Arrangement		Keying	Square Flange Receptacle		Plug
Shell Size	No. of Positions		With Threaded Inserts[1]	With Mounting Holes	
13-7		A	211401-4	211401-1	211399-1
17-9		A	211767-2	211767-1	211766-1
23-19		A	211771-2	211771-1	211770-2
		B	—	213870-1	213853-1

[1] Four 4-40 threaded inserts per receptacle.

Reverse Sex Connectors (Receptacles accept socket contacts, Plugs accept pin contacts)

Arrangement		Keying	Square Flange Receptacle		Free-Hanging Receptacle	Plug
Shell Size	No. of Positions		With Threaded Inserts[1]	With Mounting Holes		
13-7		A	211398-4	211398-1	211398-2	211400-1
17-9		A	—	211769-1	211769-3	211768-1
		B	—	796439-2	—	796450-1
23-19		A	—	211773-1	—	211772-1
		B	—	213868-1	—	213852-1

[1] Four 4-40 threaded inserts per receptacle.
Key Style "A" is the Standard 5 Locating Key arrangement. Key Style "B" is the 4 Locating Key arrangement.

Replacement Coupling Rings

Shell Size	Part No.
13	213813-1
17	213810-1
23	213812-1

Material

Housing – Thermoplastic, 94V-0 rated, black

Related Product Data

Contacts – Pages 19-23
Contact Arrangement – Page 24
Component Dimensions – Page 25*
Accessories – Pages 39-43, 58-59
Performance Characteristics – Page 6
Application Tooling – Pages 81-83
Technical Documents – Page 84

Keying

Molded-in keying in two configurations:

A – Standard Configuration: 5 Keys

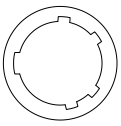

B – Optional Configuration: 4 Keys to prevent mismating of standard and reverse sex.

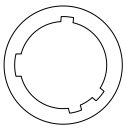

Dimensions are in inches and millimeters unless otherwise specified. Values in brackets are metric equivalents.
Dimensions are shown for reference purposes only. Specifications subject to change.

Square Flange Receptacles, Printed Circuit Board Mount

with .025 [0.64] sq. solder tails

Material and Finish

Housing – Thermoplastic, 94V-0 rated, black
Contacts –
A – Duplex plated gold flash on entire contact with .000030 [0.00076] min. precious metal on contact engagement area, tin on the termination area
C – Plated tin on the entire contact, tin on the termination area

Related Product Data

Contact Arrangement – Page 24
Performance Characteristics – Page 6
Technical Documents – Page 84
Product Specification – 108-10024-5
Test Report – 501-483-5

Keying

Molded-in keying in two configurations:
A – Standard Configuration: 5 Keys

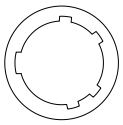

B – Optional Configuration: 4 Keys to prevent mismating of standard and reverse sex.

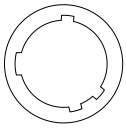

Other Available Posted Contacts

TE Connectivity can make available contacts with various solder tail lengths for loading into the standard or reverse sex, square flange receptacles for applications requiring custom solder tail lengths.

Standard Sex (Posted Pin Contacts)

Arrangement		Receptacle Assemblies		Keying Style	Dimensions		Contact Finish Code	Peripheral Seal
Shell Size	No. of Pos.	Mounting Holes	4-40 Threaded Inserts		X	Y		
11-4		—	207825-9	A	.119 [3.02]	.816 [20.73]	A	N
13-7		—	1-796433-1	A	.220 [5.59]	.816 [20.73]	A	N
13-9		208223-9	—	A	.220 [5.59]	.816 [20.73]	A	N
		—	1-208223-0	A	.220 [5.59]	.816 [20.73]	A	N
17-16		—	1-207303-4	A	.220 [5.59]	.816 [20.73]	A	N
		1-207303-5	—	A	.220 [5.59]	.816 [20.73]	C	N
		1-207303-3	—	A	.220 [5.59]	.816 [20.73]	A	N
		213855-3	213855-4	B	.220 [5.59]	.816 [20.73]	A	N
23-19		213782-4	—	A	.429 [10.90]	.679 [17.24]	A	N
		213859-2	—	B	.618 [15.70]	.674 [17.12]	A	N
23-24		—	213588-2	A	.220 [5.59]	.654 [16.61]	C	N
		213798-3	—	A	.618 [15.70]	.679 [17.24]	A	N
		213780-2	—	A	.220 [5.59]	.654 [16.61]	A	N
23-37		1-206934-1	—	A	.220 [5.59]	.654 [16.61]	A	N
		206934-5	—	A	.119 [3.02]	.654 [16.61]	A	N
		—	1-206934-7	A	.119 [3.02]	.654 [16.61]	A	Y
		1-206934-8	—	A	.429 [10.90]	.654 [16.61]	A	N
		213854-3	—	B	.429 [10.90]	.654 [16.61]	A	N

Note: Posts are .017 [0.43] offset from centerline of contacts. All posts must be oriented in the same plane for proper contact/post location.

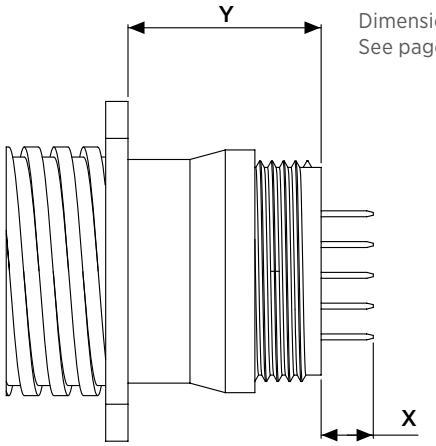

Dimensions X and Y are in the chart above. See page 23 for all other dimensions

Note: All part numbers are RoHS Compliant.

Square Flange Receptacles, Printed Circuit Board Mount

with .025 [0.64] sq. solder tails

Material and Finish

Housing – Thermoplastic, 94V-0 rated, black
Contacts –
A – Duplex plated gold flash on entire contact with .000030 [0.00076] min. precious metal on contact engagement area, tin on the termination area
C – Plated tin on the entire contact, tin on the termination area

Related Product Data

Contact Arrangement – Page 24
Performance Characteristics – Page 6
Technical Documents – Page 84
Keying – Page 14

Reverse Sex (Posted Socket Contacts)

Arrangement		Receptacle Assemblies		Keying Style	Dimensions		Contact Finish Code	Peripheral Seal
Shell Size	No. of Pos.	Mounting Holes	4-40 Threaded Inserts		X	Y		
11-4		208283-4	—	A	.159 [4.04]	.536 [13.61]	A	N
		1-788130-1	—	A	.704 [17.88]	.541 [13.74]	C	N
17-9		1-213826-1	—	A	.220 [5.59]	.536 [13.61]	C	Y
17-14		213729-9	213729-6	A	.368 [9.35]	.536 [13.61]	A	N
		1-213825-7	—	A	.220 [5.59]	.536 [13.61]	C	Y
23-19		213827-8	—	A	368 [9.35]	.374 [9.50]	C	Y
23-37		2-208224-1	—	A	.557 [14.15]	.374 [9.50]	A	N
		213856-4	—	B	.557 [14.15]	.374 [9.50]	A	N
		207890-2	—	A	.159 [4.04]	.374 [9.50]	A	N

Note: Posts are .017 [0.43] offset from centerline of contacts. All posts must be oriented in the same plane for proper contact/post location.

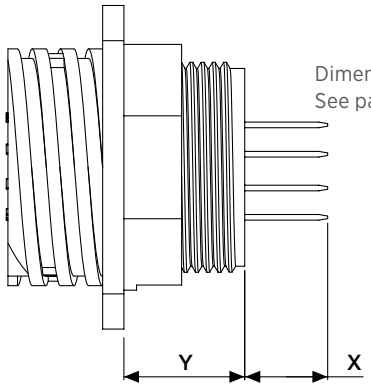

Dimensions X and Y are in the chart above.
See page 23 for all other dimensions

Special CPC Connectors, Square Flange Receptacles, Printed Circuit Board Mount

With Round Posted Contacts
(Size 16), Contact Arrangement 17-16

Material and Finish

Housing – Thermoplastic, 94V-0 rated, heat-stabilized, fire-resistant, self-extinguishing, black
Contacts – Brass
Plating –
Connector Part No. 207292-1 – Plated tin over .000050 [0.00127] min. nickel on entire contact
Connector Part No. 207292-2 – Plated .000030 [0.00076] min. gold over .000050 [0.00127] min. nickel on entire contact

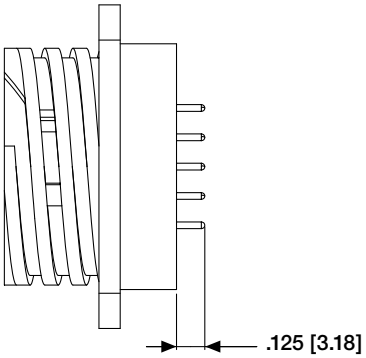

Notes:
1. Connector can be used for pressure bulkhead feedthru (sealed) applications.
2. Receptacle is **Standard Sex**, supplied preloaded with 16 special round posted pin contacts, .030 [0.76] diameter.

Dimensions are in inches and millimeters unless otherwise specified. Values in brackets are metric equivalents.
Dimensions are shown for reference purposes only. Specifications subject to change.

Special CPC Connectors, Square Flange Receptacles

With Solder Type Contacts (Size 16), Contact Arrangement 17-16

Material and Finish

Housing – Thermoplastic, 94V-0 rated, heat-stabilized, fire-resistant, self-extinguishing, black
Contacts – Brass
Plating –
Plated .000030 [0.00076] min. gold over .000030 [0.00076] min. nickel on entire contact
Connector Part No. 206404-2 – Plated tin over .000100 [0.00254] min. copper on entire contact

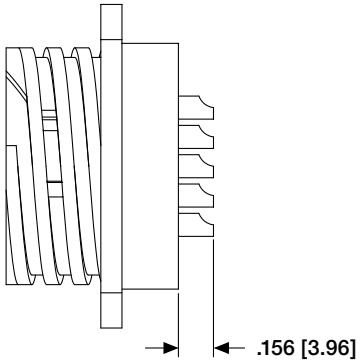

Notes: 1. Connector can be used for pressure bulkhead feedthru (sealed) applications.
2. Receptacle is standard sex, supplied preloaded with 16 special solder cup pin contacts.

Special CPC Connectors, Feed-Thru

Pressure Rating up to 30 psi

Arrangement		Standard Numbering Plug	Reverse Numbering Plug	Feed-Thru Receptacle
Shell Size	No. of Positions			
11-4		206060-1	206516-1	206518-2
17-16		206037-1	206554-1	206552-1

Note: Feed-Thru Receptacles are **fully loaded** with Size 16, feed-thru pin contacts. Order Size 16 crimp, snap-in socket contacts for plugs separately.

Material and Finish

Housing – Thermoplastic, 94V-0 rated, black
Contacts – Copper alloy, gold over nickel plated

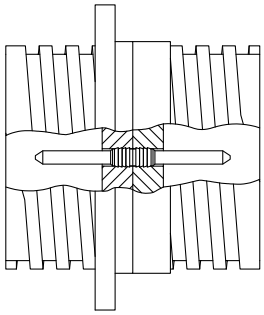

Note: All part numbers are RoHS Compliant.

Square Flange Receptacles, Right-Angle, Posted

with **.025 [0.64] sq.** solder tails

Material and Finish

Housing – Thermoplastic, 94V-0 rated, black
Location Wafer – Phenolic, black
Contact Posts – .000100 [0.00254] min. tin over .000100 [0.00254] min. copper
Contact Body –
A – .000100 [0.00254] min. tin over .000050 [0.00127] min. nickel
B – .000030 [0.000762] min. precious metal for a length of .200 [5.08] min. from mating end, with remainder gold flash, both over .000050 [0.00127] min. nickel

Related Product Data

Contact Arrangements – Page 24
Component Dimensions – Page 25*
Performance Characteristics – Page 6
Keying – Standard Configuration: 5 Keys – Page 14
Technical Documents – Page 84

Standard Sex (Posted Pin Contacts)

Arrangement		Receptacle Assemblies		Contact Body Finish Code	Mating Plug Part No.
Shell Size	No. of Positions	Mounting Holes	4-40 Threaded Inserts		
11-4		1-796403-1	1-796403-2	B	206060-1
13-7		—	1-796435-2	B	211399-1
13-9		1-796375-1	1-796375-2	B	206708-1
17-16		1-796404-1	—	B	206037-1
23-24		1-796387-1	—	A	206837-1
		1-796387-2	—	B	206837-1
23-37		1-796406-1	—	B	206150-1

Reverse Sex (Posted Socket Contacts)

Arrangement		Receptacle Assemblies		Contact Body Finish Code	Mating Plug Part No.
Shell Size	No. of Positions	Mounting Holes	4-40 Threaded Inserts		
11-4		1-796407-1	—	B	206429-1
13-7		1-796500-1	—	B	211400-1
17-14		796348-2	—	B	206044-1
23-19		1-796502-1	—	B	211772-1
23-37		1-796409-1	—	B	206305-1

See page 23 for callout dimensions

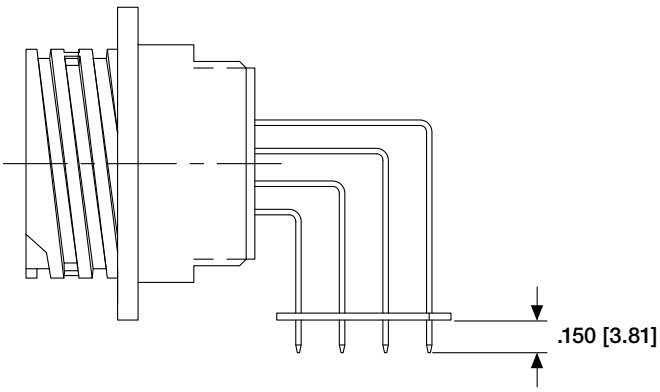

Dimensions are in inches and millimeters unless otherwise specified. Values in brackets are metric equivalents.
Dimensions are shown for reference purposes only. Specifications subject to change.

Square Flange Receptacles, Right-Angle, Posted

with **.045 [1.14] sq.** solder tails.
For Higher Current Applications

Standard Sex (Posted Pin Contacts)

Arrangement		Receptacle Assemblies	Contact Body Finish Code	Mating Plug Part No.
Shell Size	No. of Positions	Mounting Holes		
13-7		1776903-1	B	211399-1
17-16		1776904-1	B	206037-1
23-24		1776905-1	B	206837-1
23-37		1776906-1	B	206150-1

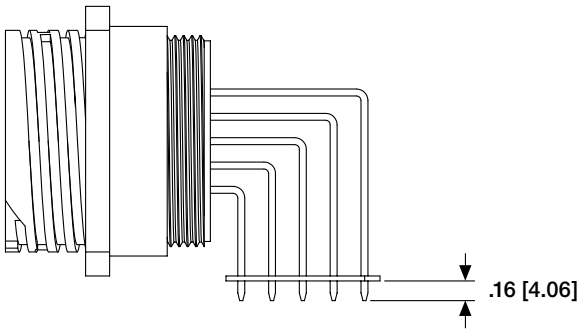

See page 23 for dimensions

Material and Finish

Housing – Thermoplastic, 94V-0 rated, black
Location Wafer – Phenolic, black
Contact Posts – .000100 [0.00254] min. tin over .000100 [0.00254] min. copper
Contact Body –
A – .000100 [0.00254] min. tin over .000050 [0.00127] min. nickel
B – .000030 [0.000762] min. precious metal for a length of .200 [5.08] min. from mating end, with remainder gold flash, both over .000050 [0.00127] min. nickel
Technical Documents – Page 84

Note: All part numbers are RoHS Compliant.

Signal Contacts, Type III+, Crimp, Snap-In

Socket

Pin

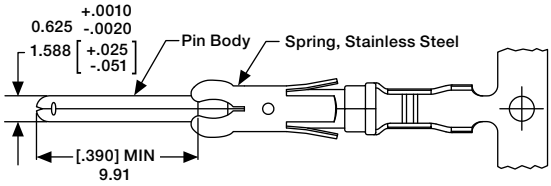

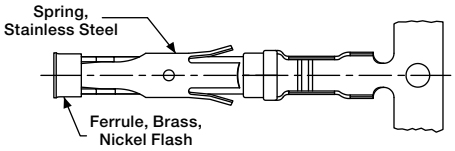

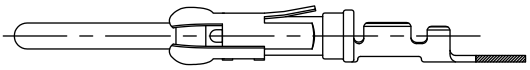

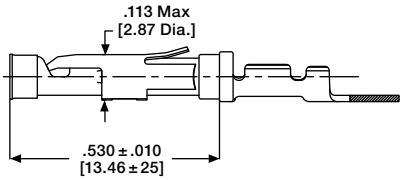

Material and Finish
See chart.

Contact Body – Copper alloy
Retention Spring – Stainless steel
Application Tooling – Pages 81-83

Technical Documents
Application Specification – 114-10004
Product Specification – 108-10042

Contact Size 16 – Pin Diameter .062 [1.57] (Test Current, 13 Ampere)‡

Wire Size Range		Ins. Dia. Range	Contact Finish	Strip Form Contact No.		Loose Piece Contact No.		Tooling Part No.	
AWG	mm²			Pin	Socket	Pin	Socket	Loose Piece Hand Tool	Strip Form Applicators
30-28	0.05-0.09	.015-.030 [0.38-0.76]	15 Precious metal/Tin[2]	788085-3	788088-2	—	—	—	***
		.015-.030 [0.38-0.76]	30 Precious metal/Tin[3]	788085-1	788088-1	—	—		
30-26	0.05-0.15	.040-.060[1] [1.02-1.52]	Tin	1-66425-2	1-66424-1	—	—	91515-1	***
		.040-.060[1] [1.02-1.52]	15 Precious metal/Tin[2]	66425-7	66424-7	66429-3	66428-3		
		.040-.060[1] [1.02-1.52]	30 Precious metal/Tin[3]	66425-8	66424-8	66429-4	66428-4		
		.014-.030[1] [0.36-0.76]	15 Precious metal/Tin[2]	66393-7	66394-7	—	—	2217762-1	2151847-□
		.014-.030[1] [0.36-0.76]	30 Precious metal/Tin[3]	66393-8	66394-8	66406-4	66405-4		
26-24	0.12-0.2	.035-.055[1] [0.89-1.40]	Tin	1-66106-5	1-66108-5	1-66107-1	1-66109-7	91515-1 or 58495-1*	2266335-□
		.035-.055[1] [0.89-1.40]	15 Precious metal/Tin[2]	66106-7	66108-7	66107-3	66109-3		
		.035-.055[1] [0.89-1.40]	30 Precious metal/Tin[3]	66106-8	66108-8	66107-4	66109-4		
24-20	0.2-0.6	.040-.080[1] [1.02-2.03]	Tin	2-66102-5	3-66104-0	1-66103-8	1-66105-9	91515-1 or 58495-1*	2151016-□ and 2266380-□
		.040-.080[1] [1.02-2.03]	15 Precious metal/Tin[2]	66102-8	66104-8	66103-3	66105-3		
		.040-.080[1] [1.02-2.03]	30 Precious metal/Tin[3]	66102-9	66104-9	66103-4	66105-4		
		.060-.120[5] [1.52-3.05]	Tin	1-66564-2	1-66563-1	66566-7	66565-7	91542-1	2151669-□
		.060-.120[5] [1.52-3.05]	30 Precious metal/Tin[3]	66564-8	66563-8	66566-4	66565-4		
		.080-.100[1] [2.03-2.54]	Tin	1-66332-4	1-66331-4	1-66400-0	1-66399-0	91523-1 or 2217762-1	2151641-□
		.080-.100[1] [2.03-2.54]	15 Precious metal/Tin[2]	66332-7	66331-7	66400-3	66399-3		
		.080-.100[1] [2.03-2.54]	30 Precious metal/Tin[3]	66332-8	66331-8	66400-4	66399-4		
18-16	0.8-1.4	.080-.100[1] [2.03-2.54]	Tin	1-66098-8	1-66100-9	1-66099-5	1-66101-9	91505-1 or 91523-1 or 58495-1*	2151023-□ or 2266601-□
		.080-.100[1] [2.03-2.54]	15 Precious metal/Tin[2]	66098-8	66100-8	66099-3	66101-3		
		.080-.100[1] [2.03-2.54]	30 Precious metal/Tin[3]	66098-9	66100-9	66099-4	66101-4		
18-14	0.8-2.0	.080-.100[1] [2.03-2.54]	Tin	1-66359-4	1-66358-6	1-66361-2	1-66360-2	91519-1	2151101-□
		.080-.100[1] [2.03-2.54]	15 Precious metal/Tin[2]	66359-9	66358-9	66361-3	66360-3		
		.080-.100[1] [2.03-2.54]	30 Precious metal/Tin[3]	1-66359-0	1-66358-0	66361-4	66360-4		
		.110-.150[5] [2.79-3.81]	Tin	66597-8	66598-9	66602-8	66601-9	91521-1	2151405-□
		.110-.150[5] [2.79-3.81]	30 Precious metal/Tin[3]	66597-2	66598-2	66602-2	66601-2		

‡ Single contact, free-air test current is not to be construed as contact rating current. Use only for testing. Refer to contact current carrying capability information on page 8.

[1] Overall insulation crimp diameter, including crimp barrel, must not exceed .125 [3.18].

[2] .000015 [.00038] min precious metal plate in the mating area, .000050 [.00127] min matte tin plate in the wire crimp area, both over .000030 [.00076] min. nickel underplate.

[3] .000030 [.00076] min precious metal plate in the mating area, .000050 [.00127 min matte tin plate in the wire crimp area, both over .000030 [.00076] min nickel underplate.

[5] **Contacts can ONLY be used in: Metrimate; CPC Series 1 (Arr. 23-19 & 23-24), Series 4 (Arr. 23-13M, 23-16M, 23-22M), and VDE connectors.**

* Commercial PRO-CRIMPER II hand tool for field repair only. **Note:** Die Set can be adapted for use with 626 Pneumatic Tool System. **Insertion Tool Part No. 91002-1** (for insulation diameters .070 [1.78] or less), **No. 200893-2** (for insulation diameters .090 [2.29] max.). **Extraction Tool Part No. 305183**. (Instruction Sheet 408-1216)

*** Call Technical Support for Machine Applicator Part Numbers.

Dimensions are in inches and millimeters unless otherwise specified. Values in brackets are metric equivalents. Dimensions are shown for reference purposes only. Specifications subject to change.

Signal Contacts, Enhanced High Current Type III+, Crimp, Snap-In

Contact Size 16 – Pin Diameter .062 [1.57]

Wire Size Range		Ins. Dia. Range	Contact Finish	Strip Form Contact No.		Loose Piece Contact No.		Tooling Part No.	
AWG	mm²			Pin	Socket	Pin	Socket	Loose Piece Hand Tool	Strip Form Applicators
18-14	0.8-2.0	.080-.100[1] [2.03-2.54]	Gold[3]	1-66359-6	1-66358-9	1-66361-4	1-66360-4	91519-1	2151101-□ ***
		.080-.100[1] [2.03-2.54]	Tin[4]	1-66359-9	2-66358-1	1-66361-6	1-66360-6		
		.110-.150[2] [2.79-3.81]	Gold[3]	1-66597-0	1-66598-1	66602-9	1-66601-0	91521-1	2151405-□ ***
		.110-.150[2] [2.79-3.81]	Tin[4]	1-66597-1	1-66598-2	1-66602-0	1-66601-2		

[1] Overall insulation crimp diameter, including crimp barrel, must not exceed .125 [3.18].
[2] Contacts can ONLY be used in CPC, Series 1 (Arr. 23-24), Series 4 (Arr. 23-13M, 23-16M, 23-22M), and VDE connectors.
[3] .000030 [.00076] min precious metal plate in the mating area with gold flash on the remainder, both over .000030 [.00076] min nickel underplate.
[4] .000050 [.00127] min tin over .000030 [.00076] min nickel.
*** Call Technical Support for Automatic Machine Applicator Part Numbers.

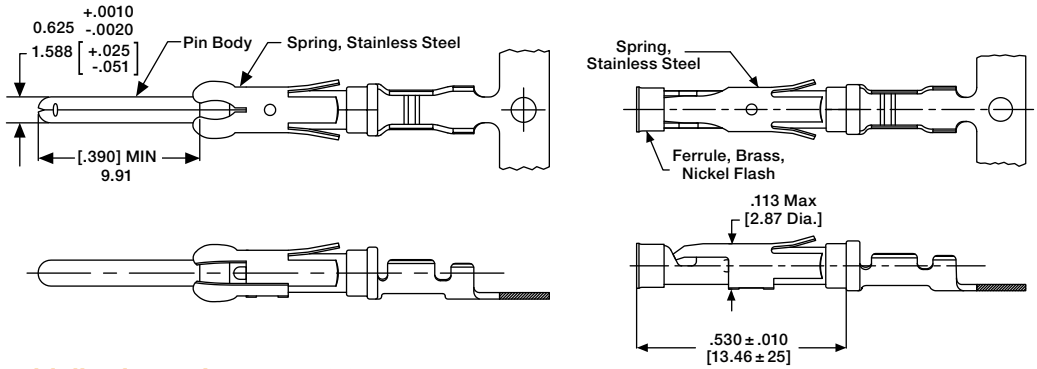

Material and Finish

(See chart)
Contact Body – Copper Nickel Alloy
Retention Spring – Stainless steel

Related Product Data

Application Tooling – Pages 81-83
Technical Documents –
Application Specification – 114-10004
Product Specification – 108-10024-2
Test Report – 502-1100

Ratings

Voltage – 250 Volts AC/DC
600 Volts AC/DC, Series I, VDE tested and select loaded only
Base Current –
Type III+ contacts: 17 amperes, 30°C temperature rise with single contact on 14 AWG wire
Enhanced High Current Type III+ contacts: **25 amperes**, 30°C temperature rise with single contact on 14 AWG wire
Temperature – -55°C to +105°C
VDE 0627 – XA/630/4KV/2 - Series I, VDE tested only

Multiplication Rating Factor (F)

Type III+ Contacts (Note: 1 = 17 amperes)

Arrangement		Percent Connector Loading					
Shell Size	No. of Pos.	Single Circuit		≅ 50%		100%	
		Wire Size		Wire Size		Wire Size	
		30 AWG	14 AWG	30 AWG	14 AWG	30 AWG	14 AWG
11-4		.291	1	.212	.905	.140	.684
13-9		.278	.995	.175	.750	.134	.567
17-16		.270	.990	.146	.625	.127	.472
23-24		.281	.985	.138	.550	.120	.416
23-37		.275	.985	.131	.497	.114	.376

Enhanced High Current Type III+ Contacts (14 AWG wire only - Note: 1 = 25 amperes)

Arrangement		Percent Connector Loading		
Shell Size	No. of Pos.	Single Circuit	≅ 50%	100%
		14 AWG	14 AWG	14 AWG
11-4		.880	.840	.640
13-9		.880	.640	.480
17-16		.880	.520	.400
23-24		.880	.520	.400
23-37		.880	.440	.320

Note: All part numbers are RoHS Compliant.

Signal Contacts, Type III+ (Precision Formed, Crimp)

Wire Size Range		Ins. Dia. Range[1]	Contact Finish	Grounding Pin Part No.		Strip Form No. Applicator Part No.	Loose Piece Hand Tool Part No.
AWG	mm²			Strip Form	Loose Piece		
26-24	0.12-0.2	.035-.055 [0.89-1.4]	Tin	164159-3	164162-1	—	91515-1 or 58495-1*
		.035-.055 [0.89-1.4]	Sel. Gold/Nickel[4]	164159-4	164162-2		
24-20	0.2-0.6	.045-.070 [1.14-1.78]	Tin	164160-3	164163-1	2151016-□*** or 2266380-□***	91515-1 or 91505-1 or 58495-1*
		.045-.070 [1.14-1.78]	Sel. Gold/Nickel[4]	164160-4	164163-2		
18-16	0.8-1.4	.078-.098 [1.98-2.49]	Tin	164161-3	164164-1	2151023-□*** or 2266601***	91523-1 or 91505-1 or 58495-1*
		.078-.098 [1.98-2.49]	Sel. Gold/Nickel[4]	164161-4	164164-2		

[1] Overall insulation crimp diameter, including crimp barrel, must not exceed .125 [3.18].
[4] Gold flash over .000030 [0.00076] min. nickel on entire contact, with .000030 [0.00076] gold in contact area.
* Commercial PRO-CRIMPER II hand tool for field repair only.
*** Call Technical Support for Automatic Machine Applicator Part Numbers.
Extraction Tool Part No. 539972-1.

Contact Size
16

Pin Diameter
.062 [1.57]

Material and Finish
Contact Body – Copper alloy, plated tin or gold
Spring – Stainless steel

Grounding Pin
(make first – break last)

Related Product Data
Performance Characteristics – Page 6
Application Tooling – Pages 81-83
Technical Documents – Page 84

Signal Contacts, High Current Power Contact – Size 16

The features of the High Current Size 16 contact have been designed to retrofit into the existing AMP Connectors such as CPC (Circular Plastic Connector) and CMC (Circular Metal Connector), G Series, M Series, Metrimate Square Grid and Drawer Connector housings. An initial T-Rise test in free air has shown a 23 amp capability with a 30° T-Rise. The contact may be crimped onto 14 AWG wire with an AMP hand tool **Part No. 601967-1**. Use turret TH502 **(1-601967-6)** for the pin and turret TH501 **(1-601967-5)** for the socket.

Wire Range		Contact Part Nos.				Crimping Tool		
		Pin		Socket		Tool	Turret	
AWG	mm²	Loose Piece	Tape Mounted	Loose Piece	Tape Mounted		for Pins	for Sockets
18-16	0.8-1.4	796964-1	796964-2	796966-1	796966-2	601967-1	1-601967-5	1-601967-5
14	2	193844-1	193844-2	193846-1	193846-2	601967-1	1-601967-6	1-601967-5

Extraction Tool Part No. 305183

Socket

Pin

Material
Body – Copper alloy
Louvertac Band – Beryllium copper
Retention Spring – Stainless steel

Finish
Body – Silver
Louvertac Band – Gold

Dimensions are in inches and millimeters unless otherwise specified. Values in brackets are metric equivalents.
Dimensions are shown for reference purposes only. Specifications subject to change.

Signal Contacts, Type III+ (Precision Formed, Solder)

Contact Size
16

Pin Diameter
.062 [1.57]

Material and Finish
Contact Body – Copper alloy, plated tin or gold
Spring – Stainless steel

Related Product Data
Performance Characteristics – Page 6
Technical Documents – Page 84

Contact Size 16 – Pin Diameter .062 [1.57]

Wire Size Range		Contact Finish	Loose Piece Contact No.	
AWG	mm²		Pin	Socket
26-20	0.12-0.6	Gold/Nickel[1]	66182-1	66183-1
18-16	0.8-1.4	Gold/Nickel[1]	66180-1	66181-1
Solder Tab[3]		Duplex[2]	202236-7	202237-7
		Tin	202236-5	202237-5

[1] .000030 [0.00076] gold in mating area over .000030 [0.00076] min. nickel.
[2] Duplex plated .000030 [0.00076] gold in mating area over .000030 [0.00076] min. nickel on contact body; bright tin on solder tab.
[3] Designed for up to 14 AWG; but, not to exceed current limitation of contact.
Note: These contacts can be used in Multimate contact cavities of all connector housings.
‡ Single contact, free-air test current is not to be construed as contact rating current. Use only for testing. Refer to contact current carrying capability information on page 8.
Extraction Tool Part No. 305183

Solder-Type (with Preformed Wire Barrel/Insulation Support)

Pin

Socket

Solder-Tab

Pin

Socket

Note: All part numbers are RoHS Compliant.

Signal Contacts, Type II, Screw Machined, Crimp

Contact Size 16 – Pin Diameter .062 [1.57] (Test Current, 13 Ampere)‡

Wire Size Range		Ins. Dia. Range[1]	Tape Mounted Contact No.[2]		Loose Piece Contact No.		Contact Color Code	Tooling Part No.	
AWG	mm²		Pin	Socket	Pin	Socket		Tape Mounted Dies for AMP-TAPETRONIC Machine 69875	Loose Piece Hand Tool
28-24	0.08-0.20	.035-.055 [0.89-1.40]	—	—	201611-1[4]	201613-1[5]	Red/Red	90249-2	91538-1 or 601967-1
		.048-.065 [1.22-1.65]	—	—	201334-1[4]	—	Red/Red	90249-2	
24-20	0.2-0.6	.040-.062 [1.02-1.57]	201578-4	—	201578-1[4]	201580-1[5]	Yellow/Red	90249-2	91538-1 or 58541-1*
		.055-.088 [1.40-2.16]	—	201328-9	201330-1[4]	201328-1[5]	Yellow/Red	90249-2	601967-1
18 (Two)	0.9-0.9 (Two)	No Ins. Support	—	—	202725-1[4]	202726-1[4]	Blue	—	91539-1 or 601967-1
18-16	0.8-1.4	.080-.105 [2.03-2.67]	—	—	202507-1[4]	202508-1[5]	—	—	90136-1 or 601967-1
		No Ins. Support	200336-6	200333-8	200336-1[4]	200333-1[4]	Blue/Blue	90250-1	91539-1 58541-1* or 601967-1
		No Ins. Support	—	—	204219-1[5,6]	—	Blue/Blue	—	
14	2	No Ins. Support	212618-2[3]	—	201570-1[4]	201568-1[5]	Violet/Blue	90250-1	91539-1 58541-1* or 601967-1
		No Ins. Support	—	—	212618-1[3,6,†]	—	—	—	

[1] Overall insulation crimp diameter, including crimp barrel, must not exceed .125 [3.18].
[2] For AMP-TAPETRONIC Machine No. 69875, order contacts by Tape Mounted Contact No., plus packaging code "IM REEL" (5000 parts per reel).
[3] Grounding pin is used to provide a make-first/break-last condition when mating and unmating connector halves.
[4] Use turret TH502 (**1-601967-6**) with hand tool **601967-1**.
[5] Use turret TH501 (**1-601967-5**) with hand tool **601967-1**.
[6] Pin length is .630±.005 [16.002±.127] on these two pins.
* Commercial PRO-CRIMPER II Hand Tool for field repair use only.
† Does not use Hand Tool 91539-1 or 601967-1.
‡ Single contact, free-air test current is not to be construed as contact rating current. Use only for testing. Refer to contact current carrying capability information on page 8.
Insertion Tool Part No. 200893-2 (for insulation diameters .070 [1.78] or less).
Extraction Tool Part No. 305183.

Material

Contact Body – Brass
Retention Spring – Stainless steel

Finish

Contact Body – .000030 [0.00076] gold over .000050 [0.00127] nickel. Gold thickness controlled on socket O.D.
Retention Spring – Stainless steel

Related Product Data

Application Tooling – Pages 81-83
Product Specification – 108-10039
Application Specification – 114-10026
Test Report – 501-28

Pin

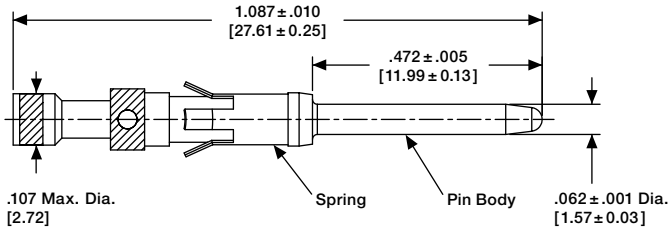

Socket

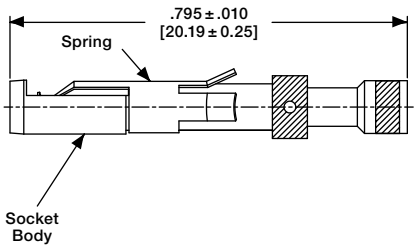

Dimensions are in inches and millimeters unless otherwise specified. Values in brackets are metric equivalents.
Dimensions are shown for reference purposes only. Specifications subject to change.

Contact Arrangements

Shell Sizes 11 and 13

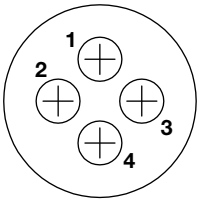

Arrangement 11-4
Max. Wire Ins. Dia. = .100 [2.54]

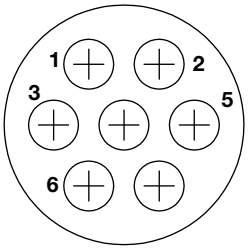

Arrangement 13-7
Max. Wire Ins. Dia. = .100 [2.54]

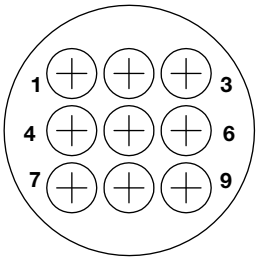

Arrangement 13-9
Max. Wire Ins. Dia. = .100 [2.54]

Shell Sizes 17

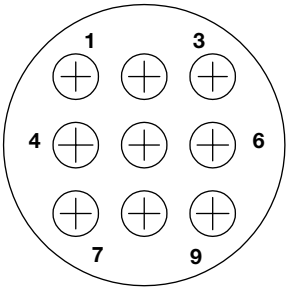

Arrangement 17-9
Max. Wire Ins. Dia. = .150 [3.81]

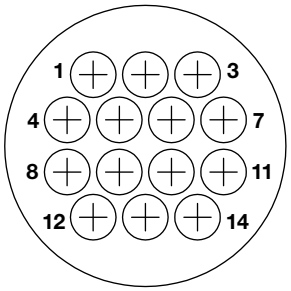

Arrangement 17-14
Max. Wire Ins. Dia. = .100 [2.54]

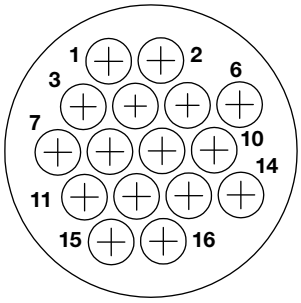

Arrangement 17-16
Max. Wire Ins. Dia. = .100 [2.54]

Shell Sizes 23

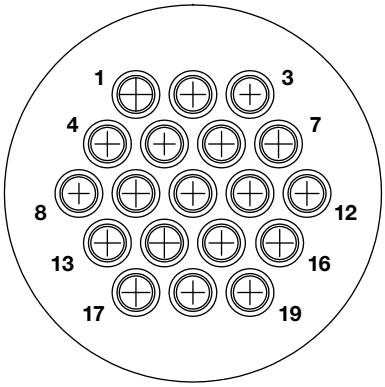

Arrangement 23-19
Max. Wire Ins. Dia. = .150 [3.81]

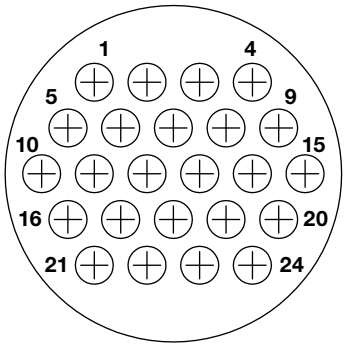

Arrangement 23-24
Max. Wire Ins. Dia. = .150 [3.81]

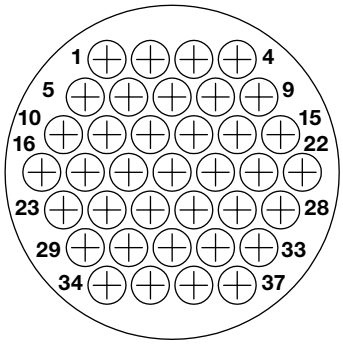

Arrangement 23-37
Max. Wire Ins. Dia. = .100 [2.54]

Note: Contact arrangements shown are for pin mating face (plug or receptacle). Socket mating face is mirror image.

Note: All part numbers are RoHS Compliant.

Component Dimensions

Square Flange Receptacle

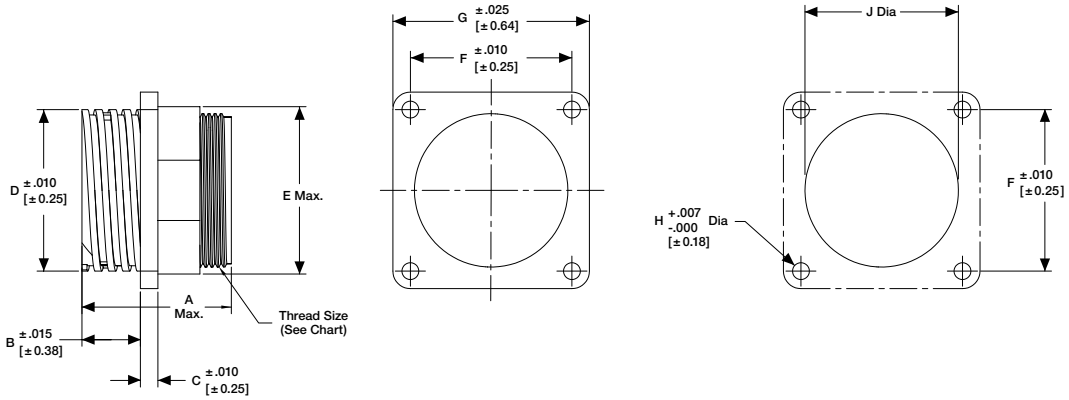

Free-Hanging Receptacle

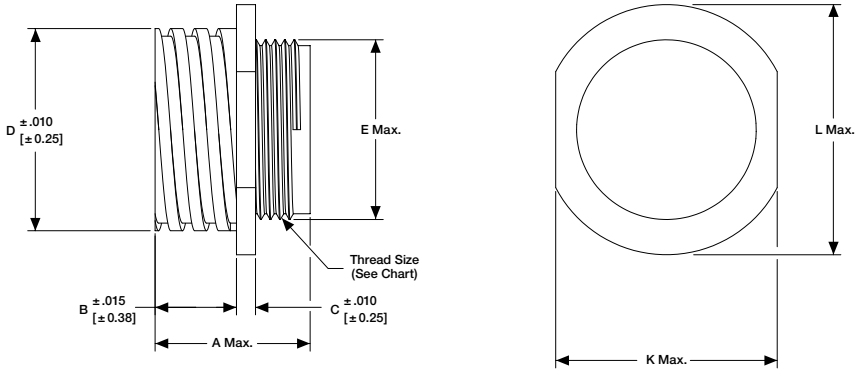

Plug

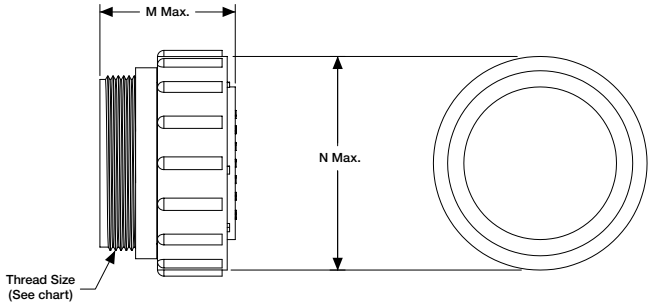

Shell Size	Sex	Dimensions													Thread Size
		A	B	C	D	E	F	G	H	J	K	L	M	N	
11	Rev.	1.070 [27.18]	.420 [10.67]	.094 [2.39]	.687 [17.45]	.740 [18.8]	.844 [21.44]	1.125 [28.58]	.125 [3.18]	.840 [21.34]	.817 [20.75]	.935 [23.75]	1.365 [34.67]	.975 [24.77]	5/8-24 UNEF-2A
	Std.	1.350 [34.29]											1.080 [27.43]		
13	Std.	1.350 [34.29]	.420 [10.67]	.094 [2.39]	.812 [20.62]	.879 [22.33]	.969 [24.61]	1.281 [32.54]	.125 [3.18]	.979 [24.87]	.874 [22.2]	1.072 [27.23]	1.080 [27.43]	1.105 [28.07]	3/4-20 UNEF-2A
17	Rev.	1.070 [27.18]	.420 [10.67]	.094 [2.39]	1.050 [26.67]	1.110 [28.19]	1.125 [28.58]	1.435 [36.45]	.150 [3.81]	1.210 [30.73]	1.161 [29.49]	1.310 [33.27]	1.365 [34.67]	1.349 [34.26]	15/16-20 UNEF-2A
	Std.	1.350 [34.29]											1.080 [27.43]		
23	Rev.	1.070 [27.18]	.520 [13.21]	.156 [3.96]	1.438 [36.53]	1.510 [38.35]	1.438 [36.53]	1.750 [44.45]	.150 [3.81]	1.610 [40.89]	1.505 [38.23]	1.733 [44.02]	1.365 [34.67]	1.788 [45.42]	1-3/8-18 UNEF-2A
	Std.	1.350 [34.29]											1.080 [27.43]		

Dimensions are in inches and millimeters unless otherwise specified. Values in brackets are metric equivalents.
Dimensions are shown for reference purposes only. Specifications subject to change.

Cable or Panel Mount

(Accepts Size 20 DM or DF Crimp, Snap-In Contacts)

Square Flange Receptacle

Free-Hanging Receptacle

Plug

Listed part numbers are for connectors only; **contacts must be ordered separately.**

Standard Sex Connectors

(Receptacles accept Size 20 DM or DF pin contacts, Plugs accept Size 20 DM or DF socket contacts)

Arrangement		Square Flange Receptacle		Free-Hanging Receptacle	Plug
Shell Size	No. of Positions	With Mounting Holes	With Threaded Inserts[1]		
11-8		205841-1	205841-3	205841-2	205838-1
11-9		206486-1	206852-8	206486-2	206485-1
17-28		205840-3	205840-4	206152-1	205839-3
23-63		205843-1	—	205843-2	205842-1

[1] Four 4-40 threaded inserts per receptacle.

Reverse Sex Connectors

(Receptacles accept Size 20 DM or DF socket contacts, Plugs accept Size 20 DM or DF pin contacts)

Arrangement		Square Flange Receptacle		Free-Hanging Receptacle	Plug
Shell Size	No. of Positions	With Mounting Holes	With Threaded Inserts[1]		
11-8		206433-1	206433-3	206433-2	206434-1
17-28		206038-1	206038-4	206038-2	206039-1
23-57		206438-1	—	206438-2	206437-1

[1] Four 4-40 threaded inserts per receptacle.
Note: For Standard and Reverse Sex Connectors the maximum wire insulation diameter is .068 [1.73].

Replacement Coupling Rings

Shell Size	Part No.
11	213811-1
17	213810-1
23	213812-1

Material

Housing – Thermoplastic, 94V-0 rated, black

Related Product Data

Contacts – Pages 29-30
Contact Arrangement – Page 31
Component Dimensions – Page 32*
Accessories – Pages 39-43
Performance Characteristic – Page 6
Application Tooling – Pages 81-83
Technical Documents – Page 84
Product Specification – 108-10024-3
Test Report – 501-483-3

Note: All part numbers are RoHS Compliant.

Receptacles, Printed Circuit Board Mount

with .025 [0.64] sq. solder tails

Standard Sex (Posted Pin Contacts)

Arrangement		Receptacle Assemblies		Dimensions		Contact Finish Code
Shell Size	No. of Positions	Mounting Holes	4-40 Threaded Inserts[1]	A	B	
11-9		1-206852-2	—	.125 [3.18]	.230 [5.84]	A
		1-206852-1	—	.352 [8.94]	.230 [5.84]	A
17-28		1-207369-1	—	.125 [3.18]	.230 [5.84]	A
		1-207369-3	—	.352 [8.94]	.230 [5.84]	A
23-63		1-206455-2	—	.227 [5.77]	.338 [8.59]	A
		1-206455-1	—	.449 [11.40]	.338 [8.59]	A

[1] Four 4-40 threaded inserts per receptacle.

Reverse Sex (Posted Socket Contacts)

Arrangement		Receptacle Assemblies		Dimensions		Contact Finish Code
Shell Size	No. of Positions	Mounting Holes	4-40 Threaded Inserts[1]	A	B	
11-8		1-208657-1	—	.352 [8.94]	.285 [7.24]	A
		—	1-208657-0	.574 [14.58]	.230 [7.24]	A
17-28		1-207216-6	—	.125 [3.18]	.230 [5.84]	B
		1-207216-7	—	.352 [8.94]	.230 [5.84]	A
23-57		1-796329-1	—	.232 [5.89]	.333 [8.46]	A

[1] Four 4-40 threaded inserts per receptacle.

Material and Finish

Housing – Thermoplastic, 94V-0 rated, black

Contacts –

A – Duplex plated gold flash on entire contact with .000030 [0.00076] min. gold on contact engagement area, tin on the termination area, all over .000050 [0.00127] min. nickel underplating

B – Plated gold flash on the entire contact, tin on the termination area

Related Product Data

Contact Arrangement – Page 31
Performance Characteristic – Page 6
Technical Documents – Page 84
Accessories – Pages 39-43
Product Specification – 108-10024-5
Test Report – 501-483-5

Other Available Posted Contacts

TE Connectivity can make available contacts with various solder tail lengths for loading into the standard or reverse sex, square flange receptacles for applications requiring custom solder tail lengths.

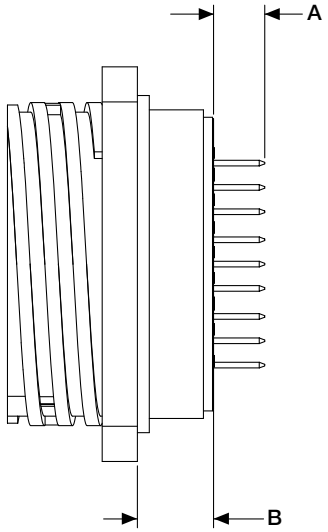

Dimensions are in inches and millimeters unless otherwise specified. Values in brackets are metric equivalents.
Dimensions are shown for reference purposes only. Specifications subject to change.

Special CPC Connectors

(Pressure rated up to 30 psi)

Listed plug connector part numbers are for connectors only; **contacts must be ordered separately.**

Material

Housing – Thermoplastic, 94V-0 rated, black
Feed-Thru Contacts – Copper alloy, plated gold over nickel

Related Product Data

Socket Contacts (for Plugs) – Pages 29-30
Contact Arrangement – Page 31
Performance Characteristic – Page 6
Accessories – Pages 39-43
Technical Documents – Page 84

Part Numbers

Arrangement		Standard Numbering Plug	Reverse Numbering Plug	Square Flange Feed-Thru Receptacle
Shell Size	No. of Positions			
11-8		205838-1	—	—
17-28		206125-1	206126-1	206127-1

Note: One plug must have standard numbering of cavities, and the other plug must have reverse numbering of cavities.

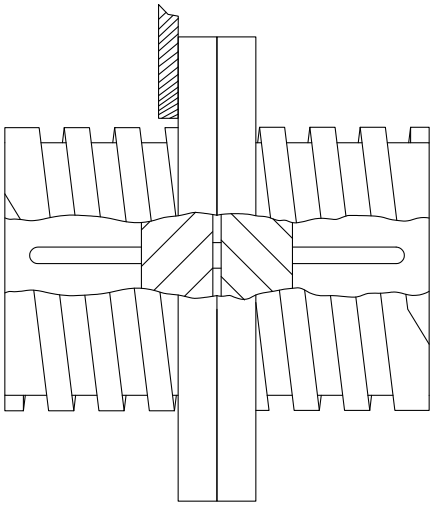

Note: All part numbers are RoHS Compliant.

Signal Contacts, Size 20 DF, Precision Formed, Crimp

Contact Size – 20
Pin Diameter – .040 [1.02]
* **Test Current –** 7.5 ampere (Single contact, free-air test current; not to be construed as contact rating current. Use only for testing.)
* **Note:** Total current capacity of each contact in any given connector is dependent on the heat rise resulting from the combination of electrical loads of all contacts in the connector arrangement and the maximum ambient temperature in which the connector will be operating. **See page 8.**

Pin

Socket

Wire Size Range	Ins. Dia. Max.	Contact Code Finish	Contact Part Nos.				Tooling		Color Code (Loose Piece)
			Pin		Socket		Strip Form Applicator††	Hand Tool	
			Strip Form	Loose Piece	Strip Form	Loose Piece			
28-24 AWG [0.08-0.2 mm²]	.040 [1.02]	A	66507-3	66507-9	66505-3	66505-9	2151428-□†† or 2266598††	91503-1	Blue Dot
		B	1658540-4	1658540-5	1658538-2	—			
		C	66507-4	1-66507-0	66505-4	1-66505-0			
		D	1658540-1	1658540-2	1658538-3	1658538-1			
	.060 [1.52]	A	66682-2	66682-4	66683-2	66683-4	***	91549-1	Black Dot
		B	5066682-9	—	1-5066683-0	—			
		D	5066682-6	—	5066683-7	—			
26-22 AWG [0.12-0.4 mm²]	.050 [1.27]	A	745254-2	745254-6	745253-2	745253-6	2151026-□††	91525-1	Yellow Dot
		B	1658544-2	1658544-1	1658543-2	1658543-1			
		C	745254-3	745254-7	745253-3	745253-7			
		D	1658544-3	1658544-1	1658543-3	1658543-1			
24-20 AWG [0.2-0.6 mm²]	.060 [1.52]	A	66506-3	66506-9	66504-3	66504-9	2151496-□††	91503-1	Red Dot
		B	1658539-1	1658539-3	1658537-3	1658537-4			
		C	66506-4	1-66506-0	66504-4	1-66504-0			
		D	1658539-2	1658539-4	1658537-1	1658537-2			

†† For complete information on TE Strip Form Applicators for fully automatic and semiautomatic machines, contact Technical Support.
*** Call Technical Support for Automatic Machine Applicator Part Numbers.

Note: Commercial PRO-CRIMPER III Maintenance and Repair Hand Tool for Wire Size 28-24 AWG [0.08-0.2 mm²] (Ins. Dia. Max. .040 [1.02]), and Wire Size 24-20 AWG [0.2-0.6 mm²] (Ins. Dia. Max. .060 [1.52])– **Part No. 58448-2**.

Material

Pin Body – Brass
Socket – Phosphor bronze

Contact Finish

A – Select gold flash over nickel on entire contact, with additional .000030 [0.00076] gold on mating end
B – Duplex plated .000030 [0.00076] gold on mating end, tin on termination end, with entire contact nickel underplated
C – Gold flash over nickel on entire contact
D – Duplex plated gold flash on mating end, tin on termination end, with entire contact nickel underplated

Related Product Data

Application Tooling – Pages 81-83
Technical Documents – Page 84
Product Specification – 108-40005

Insertion/Extraction Tool
Part No. 91285-1
Instruction Sheet – 408-9404
This tool includes interchangeable tips to Insert/Extract:
Size 22, 28-22 AWG [0.08-0.03 mm²] Crimp Contacts
Size 20, 28-20 AWG [0.08-0.6 mm²] Crimp and Solder Cup Contacts
Size 20, Posted Contacts

With Insulation Support

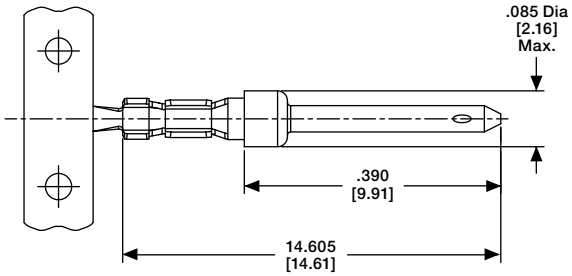

Pin

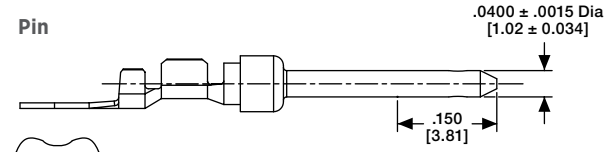

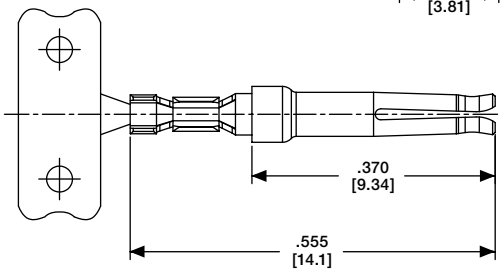

Socket

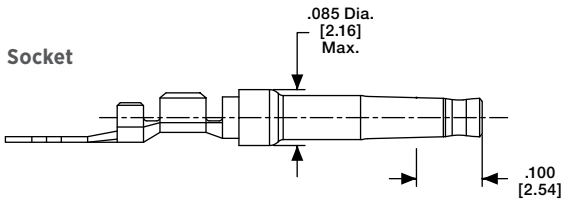

Dimensions are in inches and millimeters unless otherwise specified. Values in brackets are metric equivalents.
Dimensions are shown for reference purposes only. Specifications subject to change.

Signal Contacts, Size 20 DM, Screw-Machined, Crimp

Pin Diameter – .040 [1.02]

Test Current* – 7.5 amperes (Single contact, free-air test current; not to be construed as contact rating current. Use only for testing.)

Material and Finish

Pin Body – Copper alloy per QQ-B-626
Socket Body – Beryllium copper per QQ-C-530
Socket Sleeve – Passivated stainless steel per QQ-S-766
Plating pin and socket body – .000050-.000100 [0.00127-0.00254] min. gold over .000100-.000150 [0.00254-0.00381] min. copper

Gold plating per MIL-G-45204
Copper plating per MIL-C-14550

Wire Size Range[1]		Ins. Dia. (Max.)	Contact Configuration	Tape Mounted Contacts[2] Part No.	Loose Piece Contacts		Hand Tool Nos.		Positioner Nos.	
AWG	mm²				Military No. (M39029/)	Part No.	Military (M22520/)	Part No.	Military (M22520/)	Part No.
24-20		.068 [1.73]	Pin	205089-2	64-369	205089-1	02-01	601966-1	2-08	601966-5
			Socket	205090-2	63-368	205090-1	02-01	601966-1	2-08	601966-5

[1] Overall insulation crimp diameter, including crimp barrel, must not exceed .125 [3.18].
[2] .000015 [0.00038] gold in the mating area over .000050 [0.00127] nickel.

Pin
M39029/64-369
(Supersedes M24308/11-1)

Socket
M39029/63-368
(Supersedes M24308/10-1)

Signal Contacts, Type 20 DF, Solder Contacts

Pin Diameter – .040 [1.02]

Test Current* – 7.5 amperes (Single contact, free-air test current; not to be construed as contact rating current. Use only for testing.)

Material and Finish

Pin – Brass, plated gold flash over nickel on entire contact with additional .000030 [0.00076] min. gold on mating end
Socket – Phosphor bronze, plated gold flash over nickel on entire contact with additional .000030 [0.00076] min. gold on mating end

***Note:** Total current capacity of each contact in a given connector is dependent on the heat rise resulting from the combination of electrical loads of all contacts in the connector arrangement and the maximum ambient temperature in which the connector will be operating. See page 8.

Pin

Socket

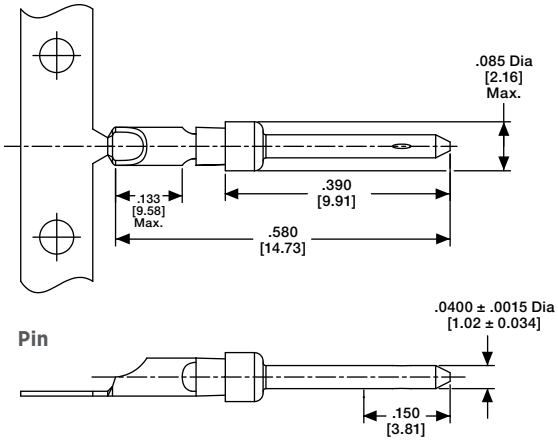

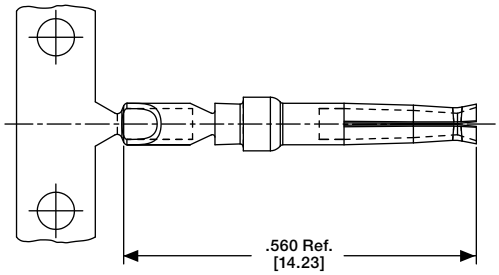

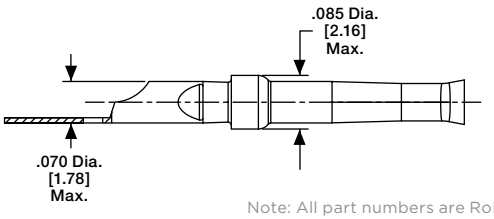

Strip Form Contact No.		Loose Piece Contact No.	
Pin	Socket	Pin	Socket
66570-2	66569-2	66570-3	66569-3

Note: Contacts to be soldered to wire before being inserted into housing, 18 AWG [0.8-0.9 mm2] max. wire size.

Note: All part numbers are RoHS Compliant.

Contact Arrangements

Note: Contact arrangements shown are of pin mating face (plug or receptacle). Socket mating face is mirror image.

Shell Size 11

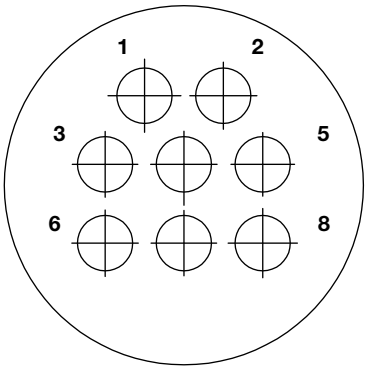

Arrangement 11-8
Max. Wire Ins. Dia. = .068 [1.73]

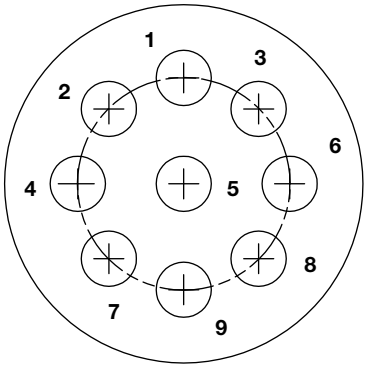

Arrangement 11-9
Max. Wire Ins. Dia. = .068 [1.73]

Shell Size 17

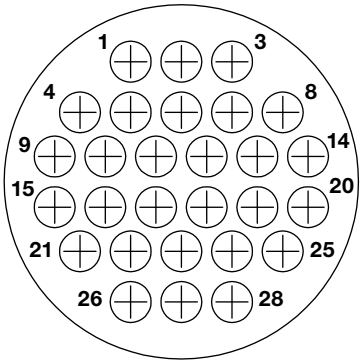

Arrangement 17-28
Max. Wire Ins. Dia. = .068 [1.73]

Shell Size 23

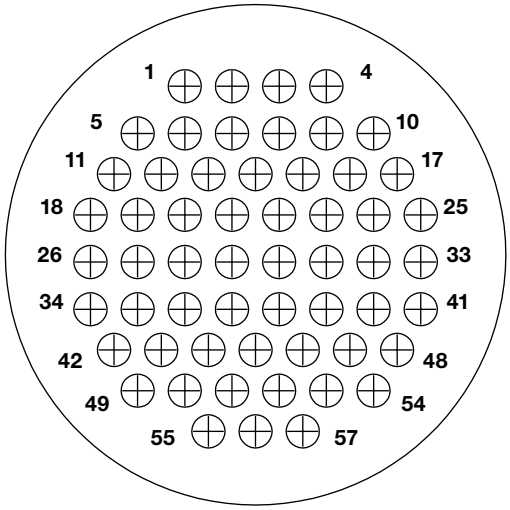

Arrangement 23-57
Max. Wire Ins. Dia. = .068 [1.73]

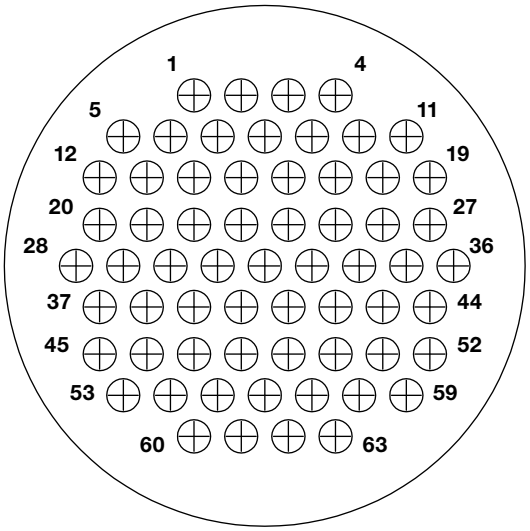

Arrangement 23-63
Max. Wire Ins. Dia. = .068 [1.73]

Dimensions are in inches and millimeters unless otherwise specified. Values in brackets are metric equivalents.
Dimensions are shown for reference purposes only. Specifications subject to change.

Component Dimensions

Square Flange Receptacle

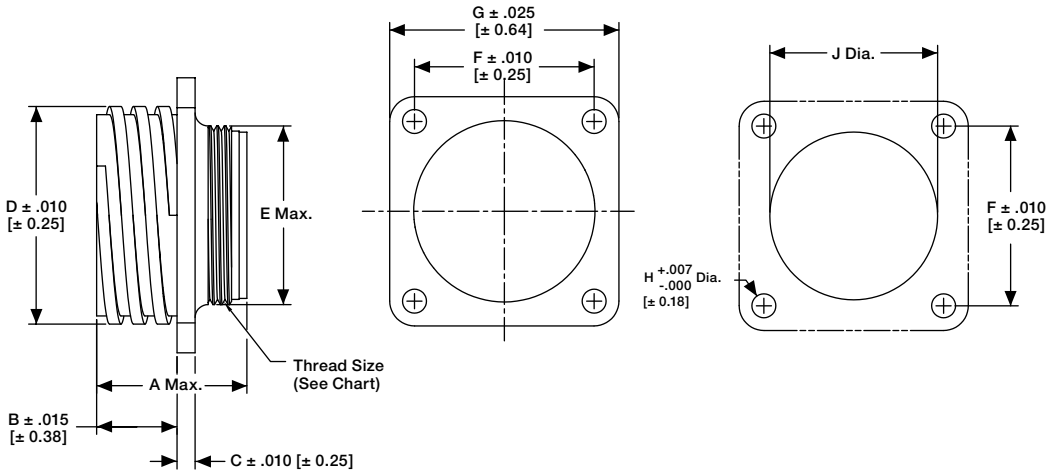

Free-Hanging Receptacle

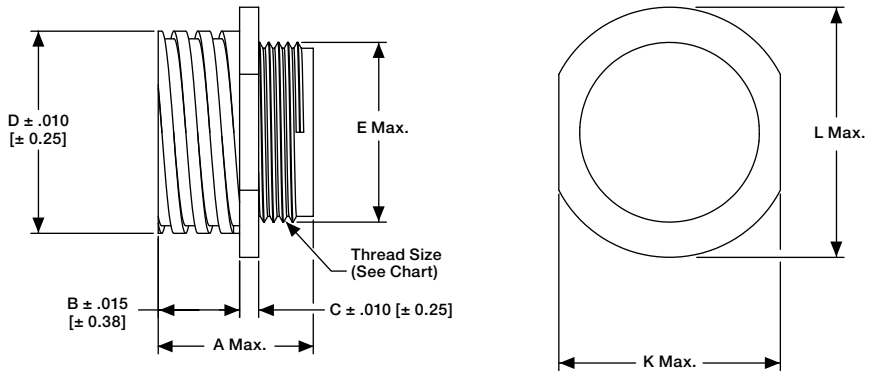

Plug

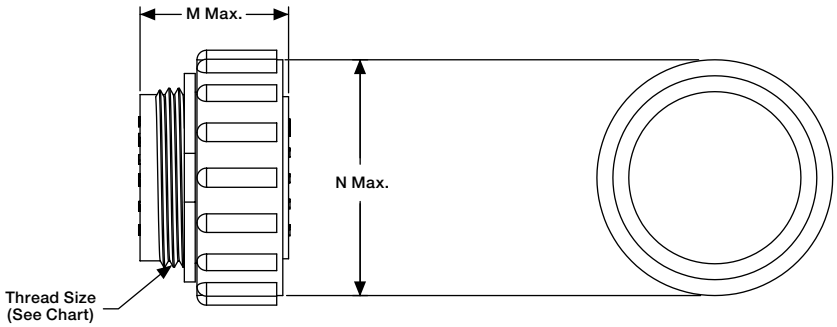

Arrangement		Dimensions													Thread Size
Shell Size	No. of Pos.	A	B	C	D	E	F	G	H	J	K	L	M	N	
11-8 11-9		.809 [20.55]	.420 [10.67]	.094 [2.39]	.688 [17.48]	.630 [16]	.844 [21.44]	1.125 [28.58]	.125 [3.18]	.840 [21.34]	.817 [20.75]	.935 [23.75]	.800 [20.32]	.975 [24.77]	5/8-24 UNEF-2A
17-28		.809 [20.55]	.420 [10.67]	.094 [2.39]	1.050 [26.67]	.943 [23.95]	1.125 [28.58]	1.435 [36.45]	.150 [3.81]	1.210 [30.73]	1.161 [29.49]	1.310 [33.27]	.800 [20.32]	1.349 [34.26]	15/16-20 UNEF-2A
23-57 23-63		.924 [23.47]	.420 [10.67]	.156 [3.96]	1.438 [36.53]	1.515 [38.48]	1.438 [36.53]	1.750 [44.45]	.150 [3.81]	1.610 [40.89]	1.500 [38.1]	1.733 [44.02]	.915 [23.24]	1.788 [45.42]	1-3/8-18 UNEF-2A

Note: All dimensions apply to both standard and reverse sex connectors.

Note: All part numbers are RoHS Compliant.

Plugs and Receptacles

Square Flange Receptacle

Free-Hanging Receptacle

Plug

Listed part numbers are for connectors only; **contacts must be ordered separately.**

Standard Sex Connectors

(Receptacles accept Type XII Male/pin contacts, Plugs accept Type XII Female/socket contacts)

Arrangement		Square Flange Receptacle		Free-Hanging Receptacle	Plug
Shell Size	No. of Positions	With Mounting Holes	With Threaded Inserts[1]		
17-3		206036-2	213581-1	206207-1	206037-2
23-7		206137-1	206137-5	206137-2	206136-1

[1] Four 4-40 threaded inserts per receptacle.

Reverse Sex Connectors

(Receptacles accept Type XII Female/socket contacts, Plugs accepts Type XII Male/pin contacts)

Arrangement		Square Flange Receptacle		Free-Hanging Receptacle	Plug
Shell Size	No. of Positions	With Mounting Holes	With Threaded Inserts[1]		
17-3		206425-1	206425-5	206425-2	206426-1
23-7		206227-1	206227-6	206227-2	206226-1

[1] Four 4-40 threaded inserts per receptacle.
Note: Maximum wire insulation diameter is .220 [5.59].

Replacement Coupling Rings

Shell Size	Part No.
17	213810-1
23	213812-1

Material

Housing – Thermoplastic, 94V-0 rated, black

Related Product Data

Contacts – Page 34–35
Contact Arrangement – Page 35
Component Dimensions – Page 36*
Accessories – Pages 39-43
Performance Characteristics – Page 6
Application Tooling – Pages 81-83
Technical Documents – Page 84
Product Specification – 108-10024-4
Test Report – 501-483-4

Dimensions are in inches and millimeters unless otherwise specified. Values in brackets are metric equivalents.
Dimensions are shown for reference purposes only. Specifications subject to change.

Power Contacts, Type XII, Precision Formed, Crimp

Wire Size Range[1]		Ins. Dia. Range[1]	Contact Finish	Strip Form Contact Part Nos.				Loose Piece		Tooling	
				Standard***		Heavy Duty Miniature***		Contact Part Nos.		OCEAN Applicator	Die Set for Hand Tool 69710-1
AWG	mm²			Male	Female	Male	Female	Male	Female		
16 and 14-12	1.25-1.4 and 2-3	.135-.160 [3.43-4.06]	A	66255-1	66740-7	66255-5	1-66740-2	66261-1	66740-8	2151426-□	90145-2[3] and 90145-1[4]
			A	66256-1[2]	—	66256-5[2]	—	66262-1[2]	—		
			B	66255-2	66740-5	66255-6	1-66740-1	66261-2	66740-6		
			B	66256-2[2]	—	66256-4[2]	—	66262-2[2]	—		
			C[5]	66255-7	66740-1	66255-8	66740-9	66261-4	66740-2		
			C[5]	66256-6[2]	—	66256-7[2]	—	66262-4[2]	—		
10	5-6	.190-.220 [4.83-5.59]	A	66253-1	66741-7	66253-5	1-66741-2	66259-1	66741-8	2151411-□	90140-1
			A	66254-1[2]	—	—	—	66260-1[2]	—		
			B	66253-2	66741-5	66253-6	1-66741-1	66259-2	66741-6		
			B	66254-2[2]	—	—	—	66260-2[2]	—		
			C[5]	66253-4	66741-1	66253-8	66741-9	66259-4	66741-2		
			C[5]	66254-4[2]	—	—	—	66260-4[2]	—		

[1] Wire strip length – .281 [7.14].
[2] Ground contact.
[3] Die insert **Part No. 90145-2** is for crimping 16 AWG [1.25-1.4 mm²] wire.
[4] Die insert **Part No. 90145-1** is for crimping 14-12 AWG [2-3 mm²] wire.
[5] Recommended for high current/vibration applications where fretting corrosion is a problem.

Extraction Tool No. 91019-3.
*** Call Technical Support for Automatic Machine Applicator Part Numbers.

Material
Copper

Finish
A – Tin
B – .000030 [0.00076] selective gold over .000030 [0.00076] nickel
C – .000100 [0.00254] silver plated contacts with lubricant added

Test Current Rating
Silver or Gold – 35 amperes ‡
Tin – 15 amperes ‡

‡ Single contact, free-air test current; not to be construed as contact rating current. Use only for testing. Refer to contact current carrying capability information, page 8.

Related Product Data
Application Tooling – Pages 81-83
Technical Documents – Page 84
Product Specification – 108-10037
Application Specification – 114-10005
Extraction Tool – 91019-3

Male

Female

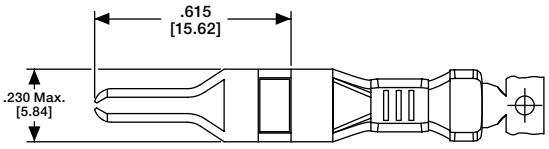

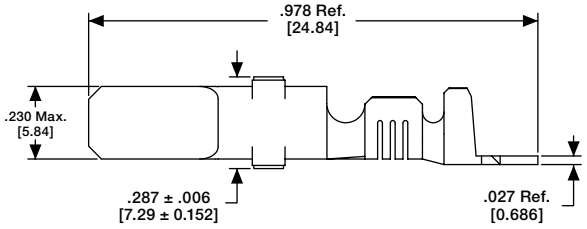

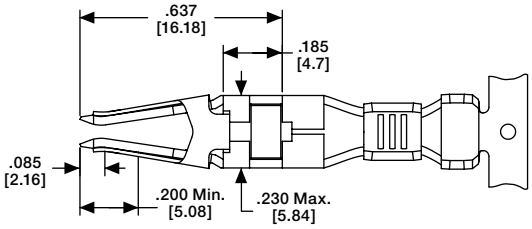

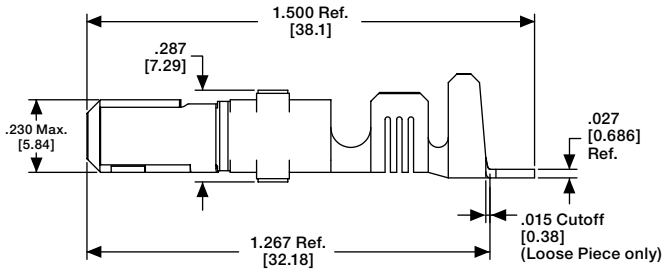

Note: All part numbers are RoHS Compliant.

Power Contacts, High Current Type XII, Crimp

The Multimate features of the High Current Type XII contact have been designed to fit into the existing AMP Connectors such as CPC (Circular Plastic Connector), CMC (Circular Plastic Metal-Shell Connector), G Series, M Series, and CMPC (Circular Multipin Connector) housings. An initial T-Rise test in free air has shown a 60 amp capability with a 30° T-Rise with 8 gage wires. The contact may be crimped onto 8 AWG wire with a Daniels Hand Tool M310 or AMP P/N 356114-1 and Positioner TP1068 or AMP P/N 356119-1.

High Current Type XII Socket
Part No. 193990-2

High Current Type XII Pin
Part No. 193991-4

Material
Body – Copper Alloy
Louvertac Band – Beryllium Copper
Retention Spring – Stainless Steel

Finish
Body – Silver
Louvertac Band – Gold

Related Product Data
Extraction Tool – 224155-1

Current-Carrying Capacity
The graph shows current-carrying capacity versus temperature rise for a fully energized 3 position CPC plug P/N 206037-2 and receptacle P/N 206036-2. These initial representative amperage ratings were conducted with 8 AWG wires that were 3 feet long.

Current Rating for 30°C Temperature Rise
100% Energized
3 Circuit Connector (Wire-to-Wire)

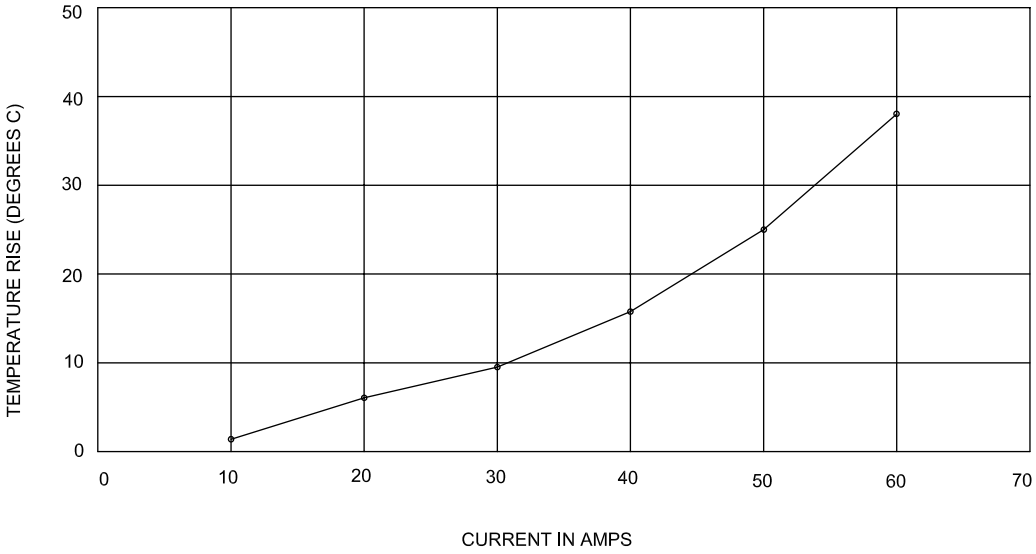

Contact Arrangements

Note: Contact arrangements shown are of pin mating face (plug or receptacle). Socket mating face is mirror image.

Shell Size 17

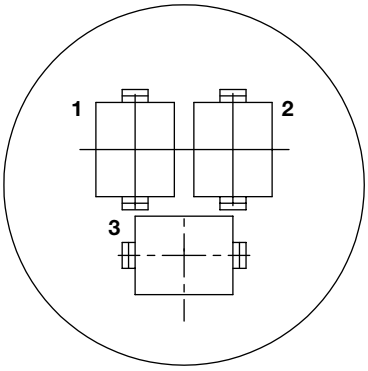

Arrangement 17-3
Max. Wire Ins. Dia. = .220 [5.59]

Shell Size 23

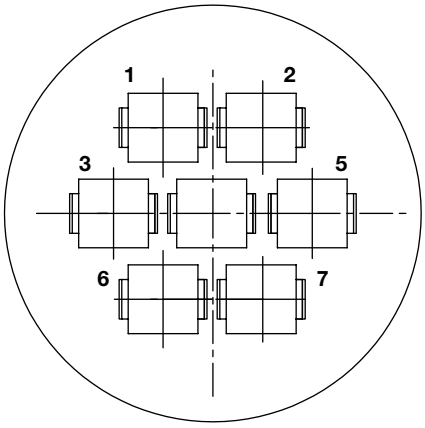

Arrangement 23-7
Max. Wire Ins. Dia. = .220 [5.59]

Dimensions are in inches and millimeters unless otherwise specified. Values in brackets are metric equivalents.
Dimensions are shown for reference purposes only. Specifications subject to change.

Component Dimensions

Square Flange Receptacle

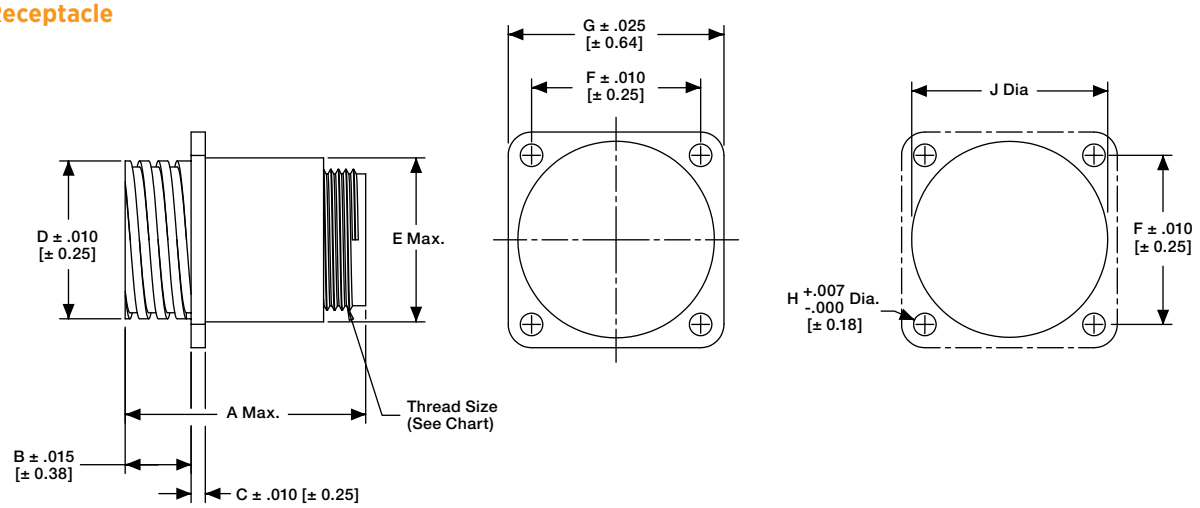

Free-Hanging Receptacle

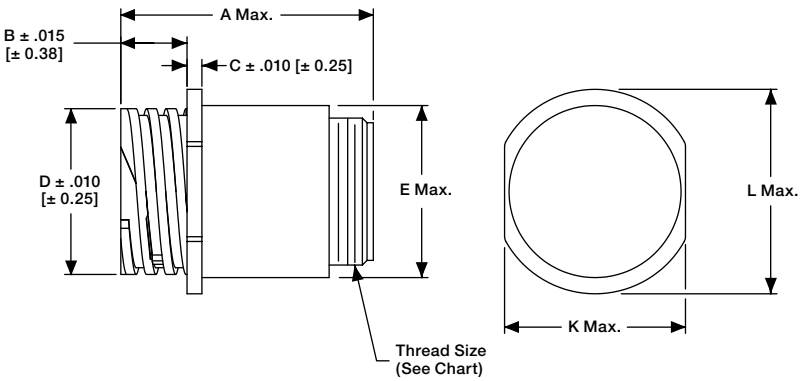

Plug

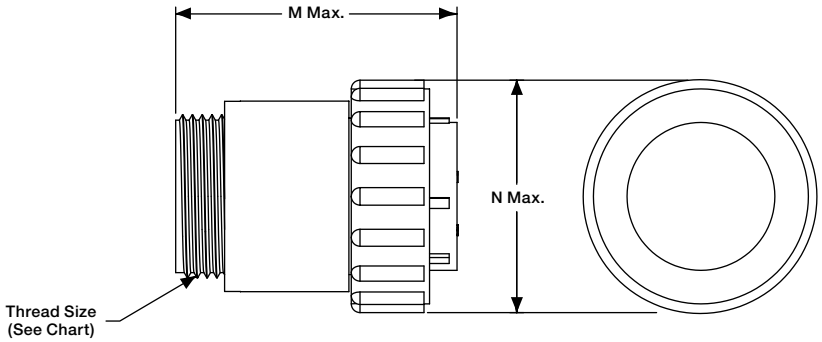

Arrangement		Dimensions													Thread Size
Shell Size	No. of Pos.	A	B	C	D	E	F	G	H	J	K	L	M	N	
17-3		1.635 [41.53]	.420 [10.67]	.094 [2.39]	1.050 [26.67]	1.110 [28.19]	1.125 [28.58]	1.435 [36.45]	.150 [3.81]	1.210 [30.73]	1.161 [29.49]	1.310 [33.27]	1.645 [41.78]	1.349 [34.26]	15/16-20 UNEF-2A
23-7		1.635 [41.53]	.520 [13.21]	.156 [3.96]	1.438 [36.53]	1.510 [38.35]	1.438 [36.53]	1.750 [44.45]	.150 [3.81]	1.610 [40.89]	1.505 [38.23]	1.733 [44.02]	1.645 [41.78]	1.788 [45.42]	1-3/8-18 UNEF-2A

Note: All dimensions apply to both standard and reverse sex.

Note: All part numbers are RoHS Compliant.

Plugs and Receptacles, Standard Sex

Square Flange Receptacle

Free-Hanging Receptacle

Plug

Arrangement		No. of Cavities		Square Flange Receptacle	Free-Hanging Receptacle	Plug
Shell Size	No. of Pos.	Power	Multimate			
23-13M		5 (Type XII)	8	211825-1	211825-2	211824-1
23-16M		4 (Type XII)	12	207486-1	207486-2	207485-1
23-22M		2 (Type XII)	20	206613-1	206613-3	206612-1

[1] Four 4-40 threaded inserts per receptacle.
Note: Maximum wire insulation diameter is .150 [3.81] for Multimate contacts; .220 [5.59] for Power contacts.

Replacement Coupling Ring

Shell Size	Part No.
23	213812-1

Listed part numbers are for connectors only; **contacts must be ordered separately.**

Material

Housing – Thermoplastic, 94V-0 rated, black

Related Product Data

Contacts – Pages 19-23 and 34–35
Contact Arrangements – Below
Accessories – Pages 39-43
Performance Characteristics – Page 6
Application Tooling – Pages 81-83
Technical Documents – Page 84

Contact Arrangements

Shell Size 23

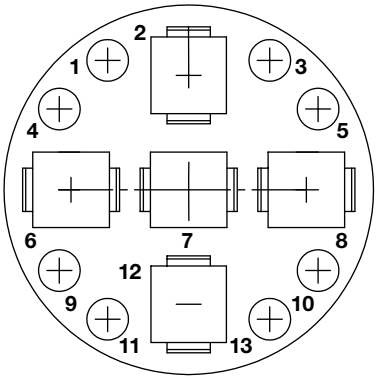

Arrangement 23-13M
Max. Wire Ins. Dia. =
.150 [3.81] for Multimate Contacts,
.220 [5.59] for Power Contacts

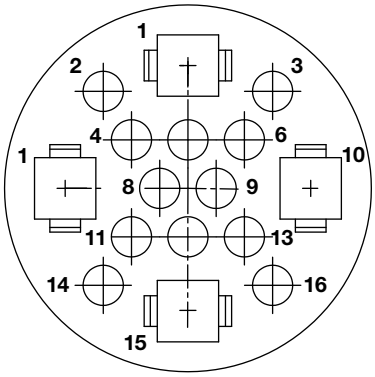

Arrangement 23-16M
Max. Wire Ins. Dia. =
.150 [3.81] for Multimate Contacts,
.220 [5.59] for Power Contacts

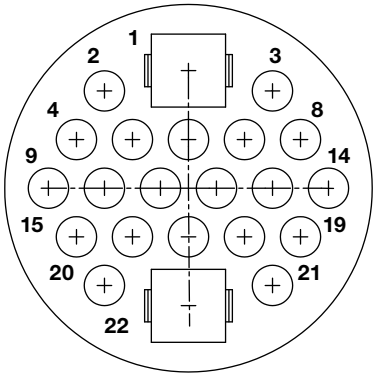

Arrangement 23-22M
Max. Wire Ins. Dia. =
.150 [3.81] for Multimate Contacts,
.220 [5.59] for Power Contacts

Note: Contact arrangements shown are of pin mating face (plug or receptacle). Socket mating face is mirror image.

Dimensions are in inches and millimeters unless otherwise specified. Values in brackets are metric equivalents.
Dimensions are shown for reference purposes only. Specifications subject to change.

Component Dimensions

Square Flange Receptacle

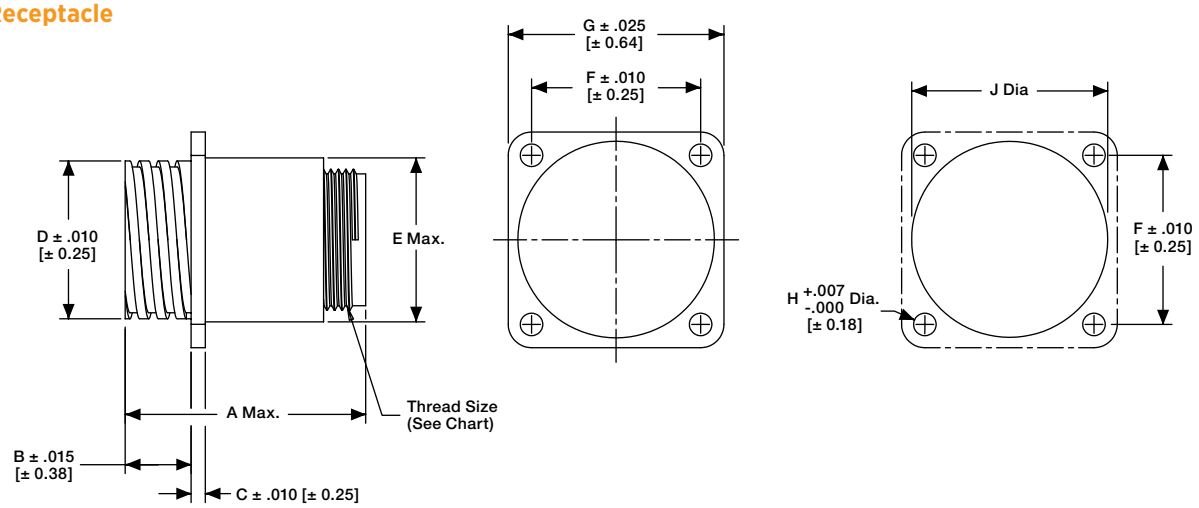

Free-Hanging Receptacle

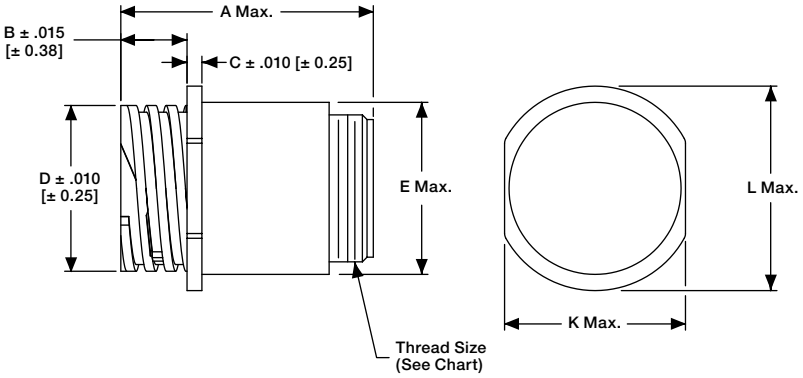

Plug

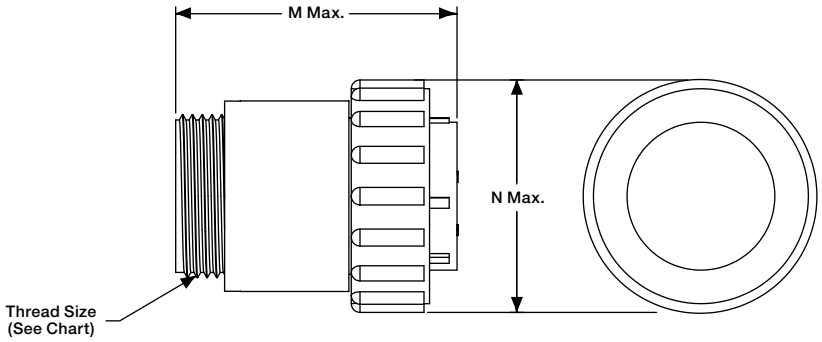

Arrangement		Dimensions													Thread Size
Shell Size	No. of Pos.	A	B	C	D	E	F	G	H	J	K	L	M	N	
23-7		1.635 [41.53]	.520 [13.21]	.156 [3.96]	1.438 [36.53]	1.510 [38.35]	1.438 [36.53]	1.750 [44.45]	.150 [3.81]	1.610 [40.89]	1.505 [38.23]	1.733 [44.02]	1.645 [41.78]	1.788 [45.42]	1-3/8-18 UNEF-2A

Note: All dimensions apply to both standard and reverse sex.

Note: All part numbers are RoHS Compliant.

Cable Clamps

Cable clamps provide strain relief and can be used on all series receptacles and plugs.

Standard Size

Shell Size	Dimensions		Cable O.D. (Max.)	Thread Size	Part No.	
	A	B			Individually Packaged	Bulk Packaged*
11	.825 [20.96]	1.250 [31.75]	.329 [8.36]	5/8-24 UNEF-2B	1-206062-4	1-206062-7** (400)
13	.950 [24.13]	1.400 [35.56]	.453 [11.51]	3/4-20 UNEF-2B	206966-7	206966-9** (200)
17	1.125 [28.58]	1.400 [35.56]	.453 [11.51]	15/16-20 UNEF-2B	206070-8	1-206070-0** (200)
23	1.600 [40.64]	1.555 [39.5]	.703 [17.86]	1-3/8-18 UNEF-2B	206138-8	1-206138-0** (100)

* Numbers in parentheses specify, in multiples, the minimum quantity of parts that can be ordered.
** Packaging includes two screws: shell sizes 11-17, screw length .500 [12.7]; shell size 23, screw length .625 [15.88].

Notes:

1. Clamping areas adjustable by inverting or changing clamping inserts. The quantity of inserts supplied with each assembly is as follows: for size 11 cable clamps, one insert; for all other cable clamps, two inserts.
2. Components for all cable clamps are packaged unassembled. This includes the cable clamp, two screws and the clamping inserts.
3. Cable clamps can be threaded directly onto plugs or receptacles, or onto back-shell extenders (page 40).
4. Replacement screws are available in the following sizes: 3/8 in. [9.52] – **5019024-1**, 1/2 in. [12.7] – **5019024-2**, 5/8 in. [15.88] – **5019024-3**, 1 in. [25.4] – **5019024-4**, 3/4 in. [19.05] – **5019024-5**.
5. Cable clamp inserts not sold separately.

Material

Black thermoplastic heat-stabilized, fire-resistant, self-extinguishing, UL 94V-0 rated

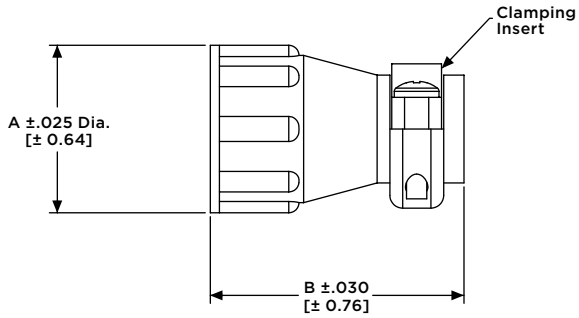

Large Size

Shell Size	Dimensions		Cable O.D. (Max.)	Thread Size	Part No.	
	A	B			Individually Packaged	Bulk Packaged*
11	.850 [21.59]	1.450 [36.83]	.453 [11.51]	5/8-24 UNEF-2B	206358-5	206358-6** (200)
13	1.131 [28.73]	1.655 [42.04]	.703 [17.86]	3/4-20 UNEF-2B	207008-5	207008-6** (100)
17	1.131 [28.73]	1.655 [42.04]	.703 [17.86]	15/16-20 UNEF-2B	206322-9	1-206322-0** (100)
23	1.600 [40.64]	1.655 [42.04]	1.125 [28.58]	1-3/8-18 UNEF-2B	206512-5	206512-6** (75)

* Numbers in parentheses specify, in multiples, the minimum quantity of parts that can be ordered.
** Packaging includes two screws: shell size 11, screw length .500 [12.7]; shell sizes 13-23, screw length .625 [15.88].

Notes:

1. Clamping areas adjustable by inverting or changing clamping inserts. The quantity of inserts supplied with each assembly is as follows: for size 23 cable clamps, four inserts; for all other cable clamps, two inserts.
2. Components for all cable clamps are packaged unassembled. This includes the cable clamp, two screws and the clamping inserts.
3. Cable clamps can be threaded directly onto plugs or receptacles, or onto back-shell extenders (page 40).
4. Replacement screws are available in the following sizes: 3/8 in. [9.52] – **5019024-1**, 1/2 in. [12.7] – **5019024-2**, 5/8 in. [15.88] – **5019024-3**, 1 in. [25.4] – **5019024-4**, 3/4 in. [19.05] – **5019024-5**.
5. Cable clamp inserts not sold separately.

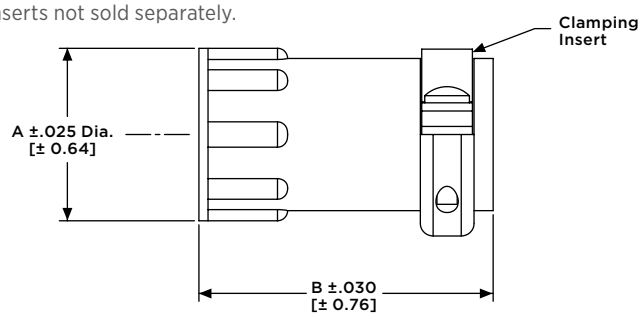

Dimensions are in inches and millimeters unless otherwise specified. Values in brackets are metric equivalents.
Dimensions are shown for reference purposes only. Specifications subject to change.

Self-Centering Cable Clamp (Shell Size 23)

The self-centering cable clamp is used in applications where strain relief protection is required and the cable or wire bundle is large and/or stiff.

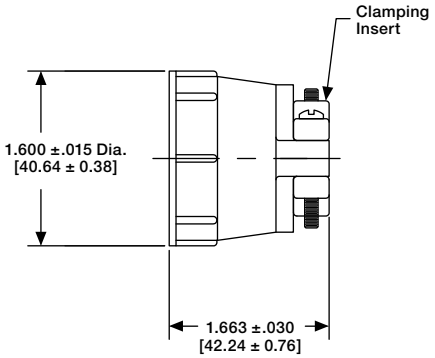

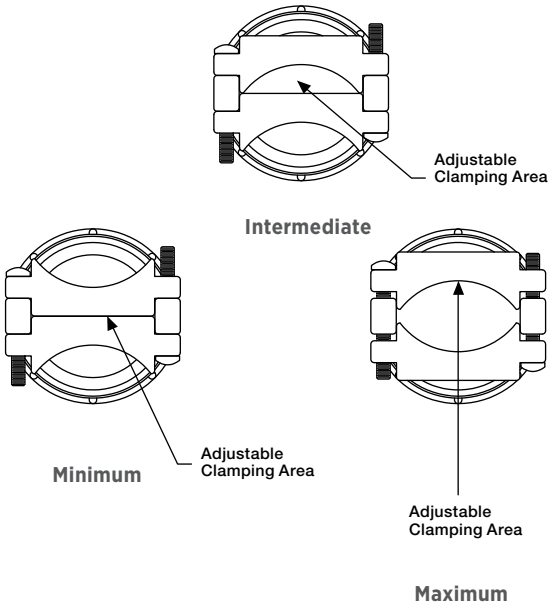

Material

Black thermoplastic,
UL 94V-0 rated

Part Numbers

207774-3 (individually packaged)
207774-4 (bulk packaged)

Notes:

1. Clamping area is adjustable by inverting clamping inserts; maximum cable diameter is 1.125 [28.58].
2. Components for cable clamp are packaged unassembled. This includes the cable clamp, two screws (1.00 [25.4]) and the clamping inserts.
3. Cable clamp can be threaded directly onto plugs or receptacles, or onto back-shell extenders (page 40).

Right-Angle Cable Clamps

Right-angle cable clamps are used in tight areas where typical 180° cable clamp strain reliefs will not fit.

Shell Size	Dimensions	Cable O.D. Max.	Coupling Ring Thread Size	Part Number	
	A			Kit	Kit w/Cover
11	.900 [22.86]	.329 [8.36]	5/8-24 UNEF-2B	796379-2	1546347-2
13	1.100 [27.94]	.453 [11.51]	3/4-20 UNEF-2B	796380-2	1546348-2
17	1.200 [30.48]	.453 [11.51]	15/16-20 UNEF-2B	796381-2	1546349-2
23	1.500 [38.10]	.703 [17.86]	1-3/8-18 UNEF-2B	796382-2	1546350-2

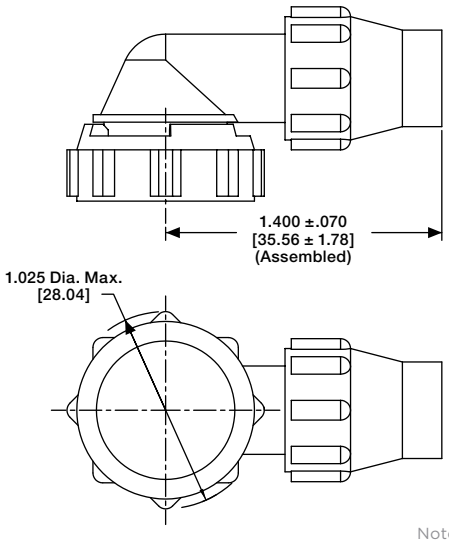

Style B
Part Number 213982-1
(for Shell Size 13)

Material

Black thermoplastic,
UL 94V-0 rated

Related Product Data

Technical Documents – Page 84

Note: All part numbers are RoHS Compliant.

Back-Shell Extender (Shell Size 23)

A back-shell extender is used with a cable clamp in applications where added length and/or additional wire breakout are required.

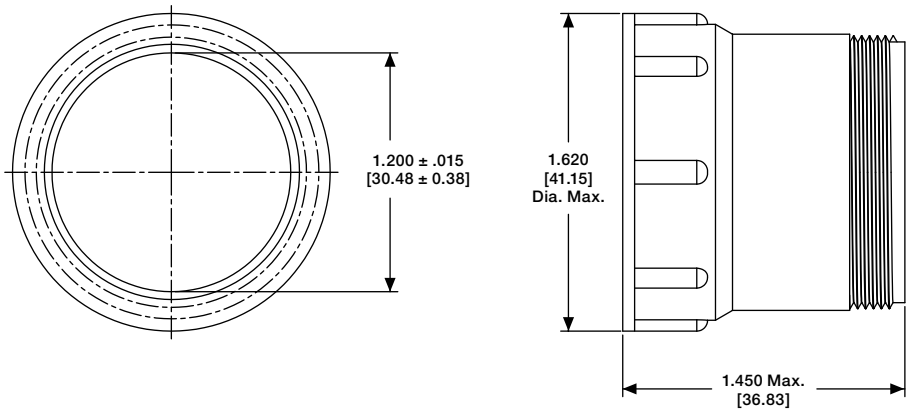

Material
Black glass-filled thermoplastic

Part No. 207055-1

Note: Back-shell extenders can be threaded directly onto plugs or receptacles and will accept cable clamps of the appropriate size (pages 38 and 39).

Panel Mount Flanges (Plugs only)

A panel mount flange is used in applications that require the plug half of a connector to be panel mounted.

Shell Size	Dimensions				Part No.
	A	B	C	D	
11	.844 [21.44]	1.125 [28.58]	.750 [19.05]	.125 [3.18]	207299-1
13	.969 [24.61]	1.280 [32.51]	.875 [22.22]	.125 [3.18]	207299-2
17	1.125 [28.58]	1.435 [36.45]	1.110 [28.19]	.150 [3.81]	207299-3
23	1.438 [36.53]	1.750 [44.45]	1.510 [38.35]	.150 [3.81]	207299-4

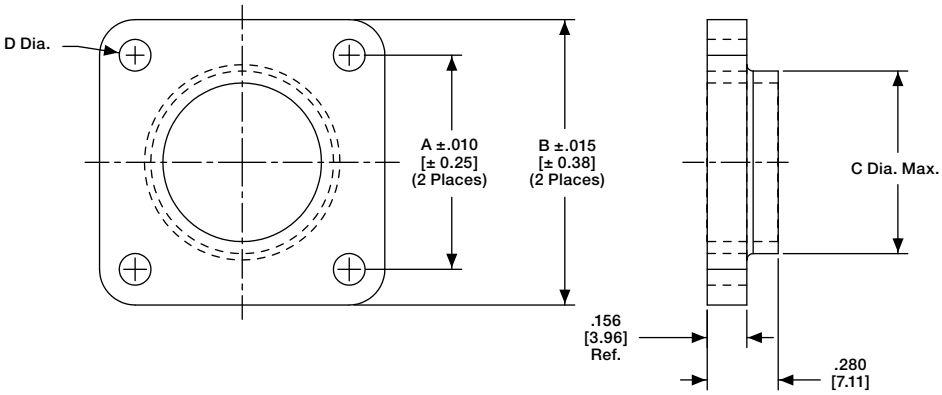

Material
Black thermoplastic

Dimensions are in inches and millimeters unless otherwise specified. Values in brackets are metric equivalents.
Dimensions are shown for reference purposes only. Specifications subject to change.

Flexible Cable Boot and Internal Cable Grip (Shell Size 11)

Flexible cable boots, with internal cable grip installed, provide strain relief capabilities for jacketed cable in applications where aesthetic appearance is essential. They can be threaded onto plugs or receptacles.

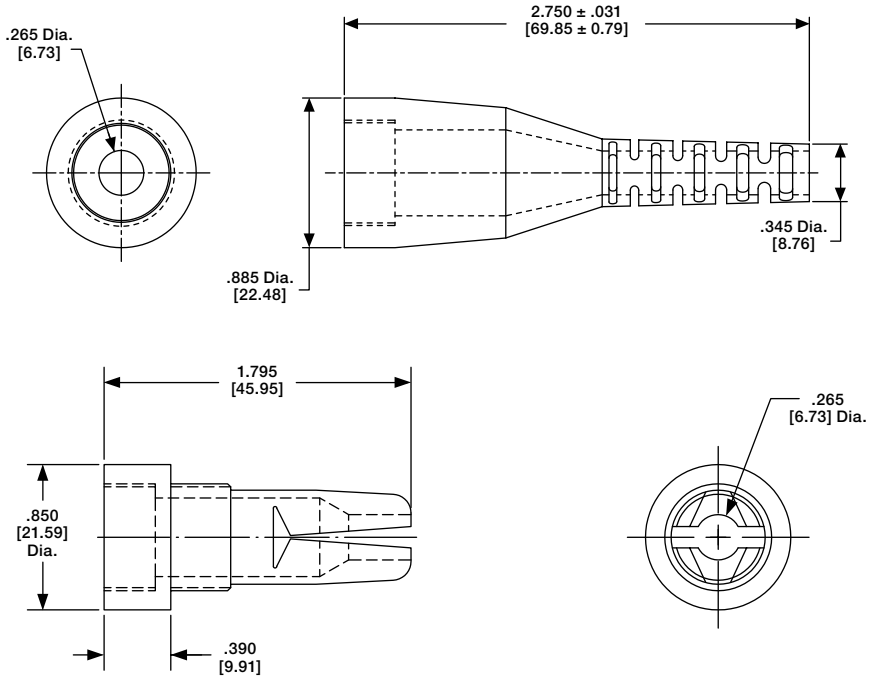

Material
Black thermoplastic

Cable Range
.150-.250 [3.81-6.35] Dia.

Part Numbers
207489-1 (Cable Boot)
207490-1 (Cable Grip)

Flexible Cable Boot and Internal Cable Grip (Shell Size 17)

Flexible cable boots, with internal cable grip installed, provide strain relief capabilities for jacketed cable in applications where aesthetic appearance is essential. They can be threaded onto plugs or receptacles.

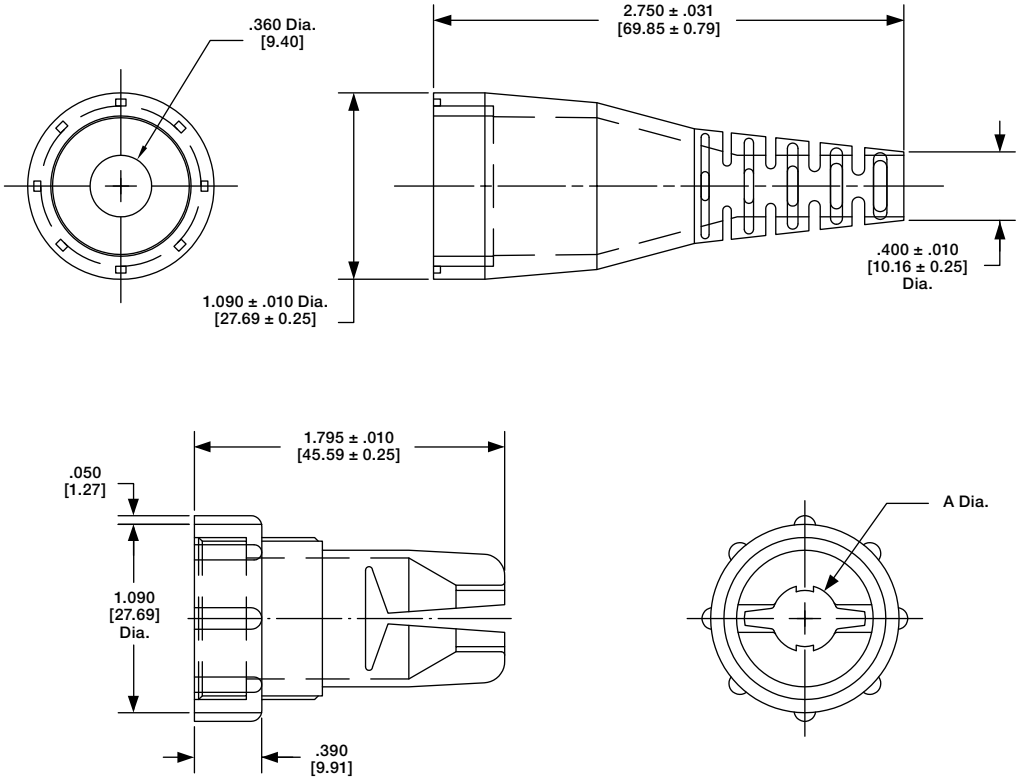

Material
Black thermoplastic

Part Numbers
207241-1 (Cable Boot)
207387-1 (Cable Grip)
A Dia. = .325 [8.26] for cable range of .200-.250 [5.08-6.35]
207387-2 (Cable Grip)
A Dia. = .385 [9.78] for cable range of .250-.350 [6.35-8.89]

Note: All part numbers are RoHS Compliant.

Keying Plugs

Keying plugs are used to provide keying capabilities for all connector series. Keying plugs are used in socket cavities of standard sex plugs and reverse sex receptacles, except when used with sealing caps.

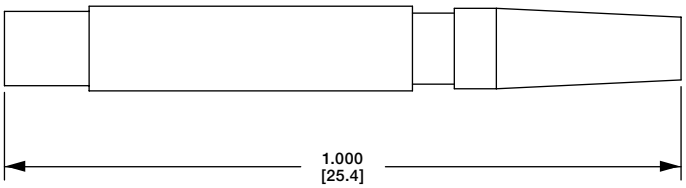

Material
Nylon, natural, UL 94V-2 rated

Series 1 and Series 4 Keying Plug
(for Types III+ Contacts)
Part No. 200821-1

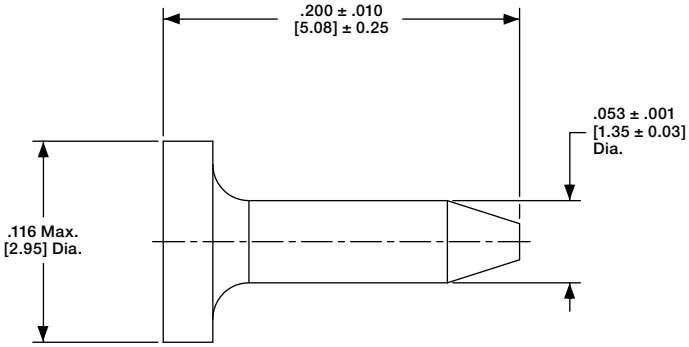

Material
Polyphenylene oxide, white, UL 94V-1 rated

Series 2 Keying Plug
(for Size 20 DM and 20 DF Contacts)
Part No. 206509-1

Socket

Pin

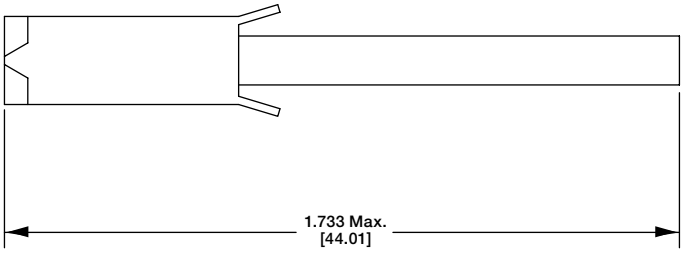

Material
(206508-1) Nylon, natural, UL 94V-2 rated
(207597-1) Thermoplastic, black, UL 94V-0 rated

Series 3 and Series 4 Keying Plugs
(for Type XII Contacts)
Part Nos. 206508-1 (Socket Cavities) – Shown Above
207597-1 (Pin Cavities)

Dimensions are in inches and millimeters unless otherwise specified. Values in brackets are metric equivalents.
Dimensions are shown for reference purposes only. Specifications subject to change.

One-Piece Sealed Circular Plastic Connectors

Product Facts

- Economical environmentally sealed connector designed for industrial applications
- Meets major Industrial Standards
- High strength, impact resistant thermoplastic housing, rated UL 94V-0
- Contains wire entry and peripheral seals
- AMP POWERBAND precision formed power contact (Series 5 and 6)
- Type III+ precision formed signal/low current contacts (Series 1 and Series 6)
- Other configurations in Series 1 can be made available, contact your local TE Connectivity Sales Engineer or TE Connectivity, Harrisburg, PA

The new Sealed One-Piece Circular Plastic Connectors are the latest product innovation to the sealed CPC product family. This design allows for easy assembly. The housing and the seal are attached. A newly designed wire entry seal protects the rear of the connector and a peripheral seal protects the connector interface. Simply crimp the contact onto a wire and insert the crimped wire contact through the seal and into the housing cavity. The connector loads the same as if the seal wasn't there. All connector cavities come in a sealed condition. No plugs are required if you do not use a position cavity.

Industry Standards One-Piece Sealed CPC products meet

- IP 67 (Temporary immersion)

Fluid Protection Against – diesel fuel, gear and engine lubricants, gasoline, anti-freeze, hydraulic fluid, water, salt sprays, etc.

Performance Characteristics

meets the same performance characteristics as shown on page 6.

Operating Temperature Range
-55°C to +105°C
[-67°F to +221°F]

UL Voltage Rating
Series 1 600 V (AC or DC)
Series 6 250 V (AC or DC)
.125 POWERBAND Power Contact – 50 amps, single contact rating at 30°C T-Rise
Type III+ Contacts – 13 amps, single contact rating at 30°C T-Rise

Flammability Rating
UL 94V-0 rated

Sealing Capability
Per IP 67

Housing Material
High strength, impact resistant thermoplastic

Fluid Resistance
Diesel fuel, gear and engine lubricants, gasoline, anti-freeze, hydraulic fluid, water

Note: All part numbers are RoHS Compliant.

Sealed Circular Plastic Connectors

Wire Size	Contact Finish	Pin Length	Contact Part No.				Tooling Part No.	
			Strip		Loose Piece			
AWG/mm²			Pin	Socket	Pin	Socket	OCEAN Applicators for AMP-O-LECTRIC Model GII Machine. Base part number 2217000	Die Sets for Hand Tool 69710-1
14-12 2-3	A	Standard	213845-1	213847-1	213845-3	213847-3	Call Technical Support for Automatic Machine Applicator Part Numbers.	356612-1
	B	Standard	213845-2	213847-2	213845-4	213847-4		
	A	Extended[1]	213845-5	—	—	—		
	B	Extended[1]	213845-6	—	—	—		
10-8 5-8	A	Standard	213841-1	213843-1	213841-3	213843-3	Call Technical Support for Automatic Machine Applicator Part Numbers.	356611-1 (8 AWG) 356611-2 (10 AWG)
	B	Standard	213841-2	213843-2	213841-4	213843-4		
	A	Extended[1]	213841-5	—	—	—		
	B	Extended[1]	—	—	213841-8	—		

[1] For use in One-Piece or Two-Piece Sealed Circular Plastic Connectors (CPC), Series 5 and 6.
‡ Single contact, free-air test current; not to be construed as contact rating current. Use only for testing. Refer to contact current carrying capability information, page 8.
Note: Standard Size 8, High Current Upgrade Size 8, and .125 POWERBAND contacts are **not** intermateable.

Pin

Socket

.125 POWERBAND Pin Contact

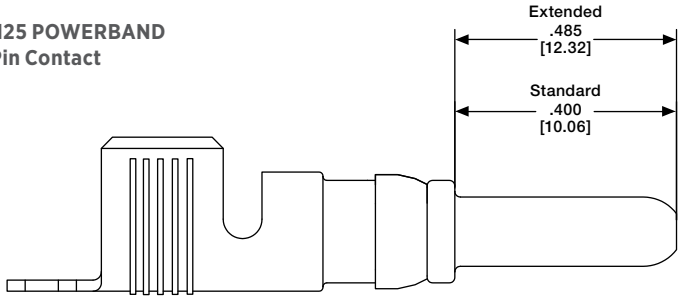

Pin

Socket

Pin

Socket

See pages 17-23 for complete product information and part numbers of Size 16 contacts applicable in Sealed CPC Connectors.

Multimate Size 16 Contacts

Precision formed signal/low current
Pin Diameter – .062 [1.57]
Test Current – 13 amps max.

.125 POWERBAND Contacts

Precision formed high current
Pin Diameter – .125 [3.175]
Test Current – 50 amps max.

Extraction Tool

Part Number 318813-1
(Instruction Sheet 408-4374)

Material and Finish

Contacts – Copper with beryllium copper spring
Plating Code –
A – Post plated .000200 [0.00508] min. silver in mating area with .000050 [0.00127] min. silver on remainder of contact, all over .000050 [0.00127] min. nickel
B – Post plated .000030 [0.00076] min. gold in mating area with gold flash on remainder of contact, all over .000050 [0.00127] min. nickel

Related Product Data

Application Tooling – Pages 81-83
Technical Documents – Page 84
Application Specification – 114-10043

Specifically designed for AMP CPC Connectors, Series 5 and 6, the new .125 POWERBAND contact offers the performance of a MIL-Spec screw machined Size 8 contact with the economy of a stamped and formed, strip-feed contact. Strip-feed contacts offer maximum production capabilities using standard AMP bench-mount, semiautomatic termination equipment. For low volume, prototype or maintenance and repair requirements, the .125 POWERBAND contact is available in loose piece form.

Dimensions are in inches and millimeters unless otherwise specified. Values in brackets are metric equivalents.
Dimensions are shown for reference purposes only. Specifications subject to change.

One-Piece Sealed CPC Receptacles, Series 1

with Pre-Installed, Bonded Peripheral Seal

Square Flange Receptacle

Free-Hanging Receptacle

Plug

Listed part numbers are for connectors only; **contacts must be ordered separately.**

Arrangement		Sex	Square Flange Receptacle	Free-Hanging Receptacle	Plug	Insulation Diameter
Shell Size	No. of Positions		With Mounting Holes			
11-4		Standard	796095-2	796096-2	796094-2	.065-.100 [1.65-2.54]
		Reverse	788154-2	788155-2	788153-2	.065-.100 [1.65-2.54]
13-9		Standard	788158-2	788159-2	788157-2	.065-.100 [1.65-2.54]
17-14		Reverse	796272-1	796273-1	796271-1	.065-.100 [1.65-2.54]
17-16		Standard	796275-1	796276-1	796274-1	.065-.100 [1.65-2.54]
		Standard	796275-2	796276-2	796274-2	.040-.080[1.01-2.03]
23-24		Standard	796190-1	796291-1	796188-1	.065-.100 [1.65-2.54]
23-37		Standard	796286-1	796287-1	796288-1	.065-.100 [1.65-2.54]

Material and Finish

Housing – Thermoplastic, UL 94V-0 rated, black
Seal – Elastomer, gray

Related Product Data

Contacts – Pages 19-23
Contact Arrangement – Page 24
Accessories – Pages 39-43 and 58-59
Performance Characteristics – Page 6
Application Tooling – Pages 81-83
Technical Documents – Page 84

Assembly Accessories

Seal Protectors are recommended to aid contact insertion through the wire entry seal. They are reusable.
Part Number 208337-1
(Insert Pins)
Part Number 208338-1
(Insert Sockets)

Pin

Socket

Wire Entry Seal Plug

Part Number 796075-1
(6 per carrier strip)
Material – Polypropylene, natural

See page 48 for dimensions

Note: All part numbers are RoHS Compliant.

One-Piece Sealed CPC, Series 5, Reverse Sex

Square Flange Receptacle

Free-Hanging Receptacle

Plug

Arrangement		Insulation Diameter	Square Flange Receptacle	Free-Hanging Receptacle	Plug
Shell Size	No. of Positions				
17-3		.095-.205 [2.41-5.21]	788189-1	796112-1	788188-1
		.150-.265 [3.81-6.73]	788189-2	—	788188-2

Listed part numbers are for connectors only; **contacts must be ordered separately.**

Material

Housing – Nylon, glass-filled UL rated 94V-0, black

Related Product Data

Contacts – Page 45
Accessories – Page 51
Application Tooling – Pages 76-79
Technical Documents – Page 84

One-Piece Sealed CPC, Series 6

Square Flange Receptacle

Free-Hanging Receptacle

Plug

Arrangement		Insulation Diameter		Sex	Square Flange Receptacle w/Mounting Holes	Free-Hanging Receptacle	Plug
Shell Size	No. of Positions	Power	Signal				
23-16		.095-.205 [2.41-5.21]	.065-.100 [1.65-2.54]	Standard	796466-1	796207-1	796203-1
				Reverse	—	796330-1	796332-1

Listed part numbers are for connectors only; **contacts must be ordered separately.**

Material

Housing – Nylon, glass-filled UL rated 94V-0, black

Related Product Data

Contacts – Pages 19-23 and 45
Application Tooling – Pages 81-83
Technical Documents – Page 84

Dimensions are in inches and millimeters unless otherwise specified. Values in brackets are metric equivalents.
Dimensions are shown for reference purposes only. Specifications subject to change.

Component Dimensions, One-Piece Sealed CPC, Series 1, 5 & 6

Square Flange Receptacle

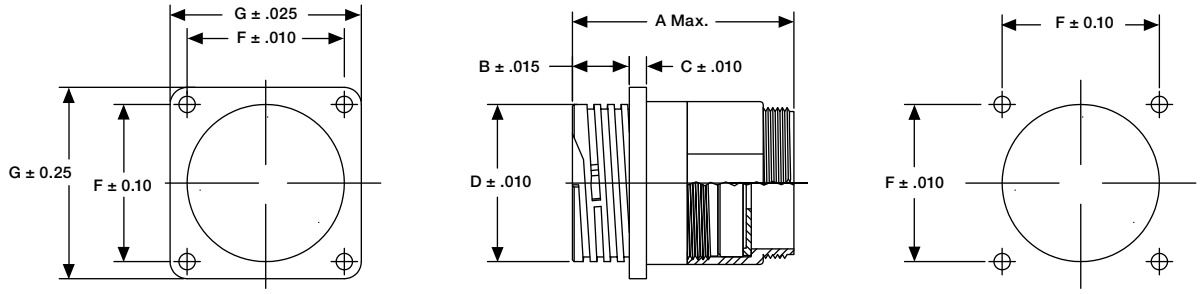

Free-Hanging Receptacle

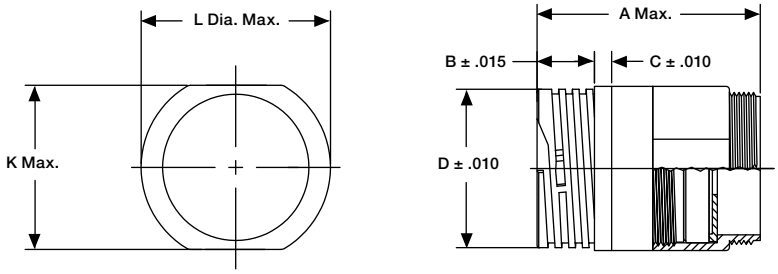

Plug

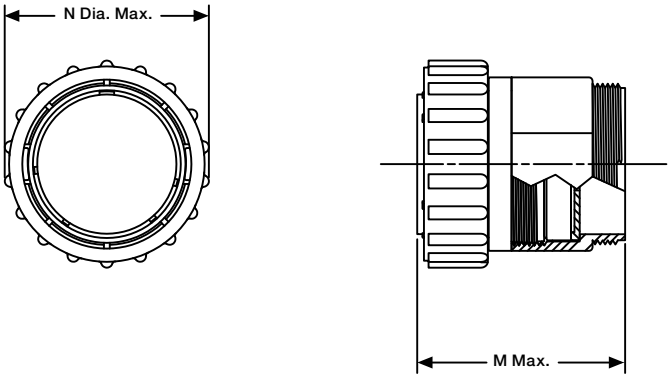

Arrange-ment	Sex	Dimensions													Thread Size
		A	B	C	D	E	F	G	H	J	K	L	M	N	
11	Std.	1.705 [43.31]	.420 [10.67]	.094 [2.39]	.687 [17.45]	.720 [18.29]	.844 [21.44]	1.125 [28.58]	.125 [3.18]	.840 [21.34]	.817 [20.75]	.935 [23.75]	1.425 [36.20]	.975 [24.77]	5/8-24 UNEF-2A
	Rev.	1.670 [49.78]											1.925 [49.78]		
13	Std.	1.705 [43.31]	.420 [10.67]	.094 [2.39]	.812 [20.62]	.859 [21.82]	.969 [24.61]	1.281 [32.54]	.125 [3.18]	.979 [24.87]	.869 [22.07]	1.072 [27.23]	1.425 [36.20]	1.100 [27.94]	3/4-20 UNEF-2A
17	Rev.	1.745 [44.32]	.420 [10.67]	.094 [2.38]	1.050 [26.67]	1.090 [27.68]	1.125 [28.58]	1.435 [36.45]	.150 [3.81]	1.210 [30.73]	1.161 [29.49]	1.310 [33.27]	2.070 [52.58]	1.330 [33.78]	15/16-20 UNEF-2A
23	Std.	2.070 [52.58]	.520 [13.21]	.156 [3.96]	1.438 [36.53]	1.600 [40.64]	1.438 [36.53]	1.750 [44.45]	.150 [3.81]	1.610 [40.89]	1.500 [38.10]	1.726 [43.89]	1.785 [45.34]	1.766 [44.86]	1-3/8-18 UNEF-2A

Note: All part numbers are RoHS Compliant.

UV-Resistant Sealed Circular Plastic Connectors

Product Facts

- Economical environmentally sealed connector designed for industrial applications
- Meets major Industrial Standards
- High strength, impact resistant thermoplastic housing, rated UL 94V-0 or flammabiliity & F1 for UV exposure
- Contains wire entry and peripheral seals
- AMP POWERBAND precision formed power contact (Series 5 and 6)
- Type III+ precision formed signal/low current contacts (Series 1 and Series 6)

One-Piece Sealed CPC with UL F1-rated resin helps provide UV resistance in outdoor applications. The UL F1 rating meets industry standards for long-term UV exposure, making the housings suitable for outside applications where parts are subject to frequent or extended periods of exposure to sun light. The connectors are sealed to IP67 with no additional enclosure needed to protect the mated connector from water exposure, lowering the cost of installation. Receptacle and plug housings accept Type III+ signal contacts and/or AMP POWERBAND (size 8) contacts. The housings come in three series designed to handle standard signal, power with current up to 50A per contact and combinations of signal and power in the same housing. Mounting options include panel mount and free-hanging.

Industry Standards One-Piece Sealed CPC products meet

- IP67 (Temporary immersion)

Fluid Protection Against – diesel fuel, gear and engine lubricants, gasoline, anti-freeze, hydraulic fluid, water, salt sprays, etc.

Performance Characteristics

meets the same performance characteristics as shown on page 6.

Operating Temperature Range
-55°C to +105°C
[-67°F to +221°F]

UL Voltage Rating
Series 1 600 V (AC or DC)
Series 6 250 V (AC or DC)
.125 POWERBAND Power Contact – 50 amps, single contact rating at 30°C T-Rise
Type III+ Contacts – 13 amps, single contact rating at 30°C T-Rise

Flammability Rating
UL 94V-0 rated

Sealing Capability
Per IP67

Housing Material
F1-rated, High strength, impact resistant thermoplastic

Fluid Resistance
Diesel fuel, gear and engine lubricants, gasoline, anti-freeze, hydraulic fluid, water

Dimensions are in inches and millimeters unless otherwise specified. Values in brackets are metric equivalents.
Dimensions are shown for reference purposes only. Specifications subject to change.

UV-Resistant One-Piece Sealed CPC Receptacles, Series 1

with Pre-Installed, Bonded Peripheral Seal

Square Flange Receptacle

Free-Hanging Receptacle

Plug

Listed part numbers are for connectors only; **contacts must be ordered separately.**

Arrangement		Sex	Square Flange Recptacle	Free-Hanging Receptacle	Plug	Insulation Diameter
Shell Size	No. of Positions		With Mounting Holes			
11-4		Standard	1977876-1	1977877-1	1977878-1	.065-.100 [1.65-2.54]
		Reverse	1977879-1	1977880-1	1977881-1	.065-.100 [1.65-2.54]
13-9		Standard	1977882-1	1977883-1	1977884-1	.065-.100 [1.65-2.54]
23-37		Standard	1977885-1	1977886-1	1977887-1	.065-.100 [1.65-2.54]

Material and Finish

Housing – Thermoplastic, UL 94V-0 rated, black
Seal – Elastomer, gray

Related Product Data

Contacts – Pages 19-23
Contact Arrangement – Page 24
Accessories – Pages 39-43 and 58-59
Performance Characteristics – Page 6
Application Tooling – Pages 81-83
Technical Documents – Page 84

Assembly Accessories

Seal Protectors are recommended to aid contact insertion through the wire entry seal. They are reusable.
Part Number 208337-1
(Insert Pins)
Part Number 208338-1
(Insert Sockets)

Pin

Socket

Wire Entry Seal Plug

Part Number 796075-1
(6 per carrier strip)
Material – Polypropylene, natural

See page 52 for dimensions

Note: All part numbers are RoHS Compliant.

UV-Resistant One-Piece Sealed CPC, Series 5, Reverse Sex

Square Flange Receptacle

Free-Hanging Receptacle

Plug

Arrangement		Insulation Diameter	Square Flange Receptacle	Free-Hanging Receptacle	Plug
Shell Size	No. of Positions				
17-3		.095-.205 [2.41-5.21]	1977888-1	2267081-1	197889-1

Listed part numbers are for connectors only; **contacts must be ordered separately.**

Material

Housing – Nylon, glass-filled UL rated 94V-0, black

Related Product Data

Contacts – Page 45
Accessories – Page 58-59
Application Tooling – Pages 81-83
Technical Documents – Page 84

UV-Resistant One-Piece Sealed CPC, Series 6

Square Flange Receptacle

Free-Hanging Receptacle

Plug

Arrangement		Insulation Diameter		Sex	Square Flange Receptacle w/Mounting Holes	Free-Hanging Receptacle	Plug
Shell Size	No. of Positions	Power	Signal				
23-16		.095-.205 [2.41-5.21]	.065-.100 [1.65-2.54]	Standard	1977890-1	1977891-1	1977889-1

Listed part numbers are for connectors only; **contacts must be ordered separately.**

Material

Housing – Nylon, glass-filled UL rated 94V-0, black

Related Product Data

Contacts – Pages 19-23 and 45
Application Tooling – Pages 81-83
Technical Documents – Page 84

Dimensions are in inches and millimeters unless otherwise specified. Values in brackets are metric equivalents.
Dimensions are shown for reference purposes only. Specifications subject to change.

Component Dimensions, One-Piece Sealed CPC, Series 1, 5 & 6

Square Flange Receptacle

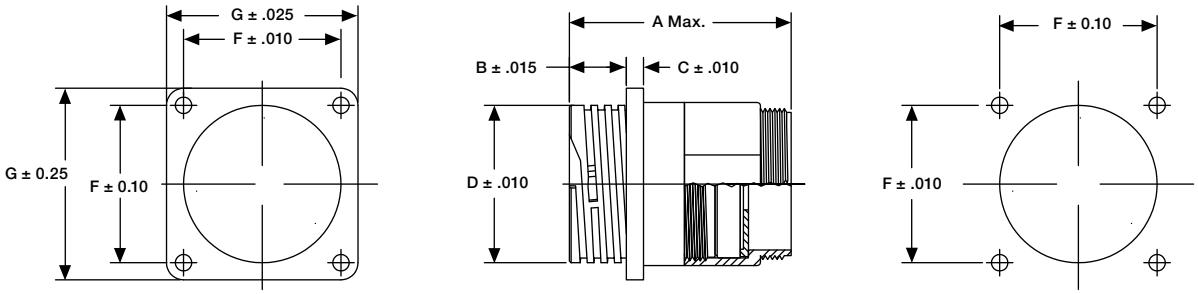

Free-Hanging Receptacle

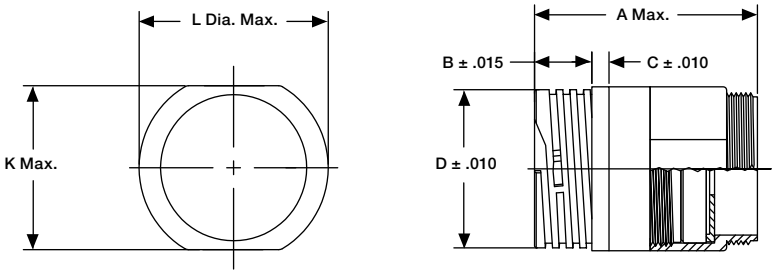

Plug

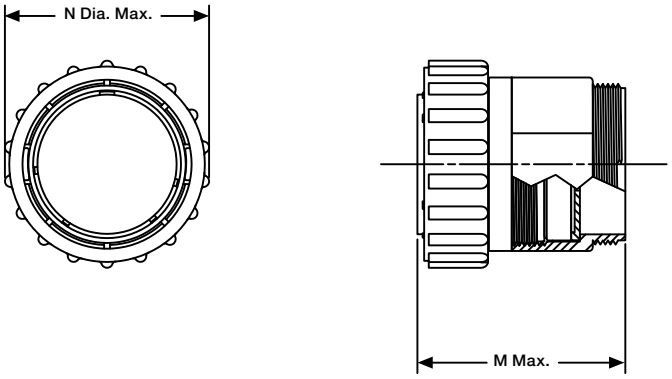

Arrange-ment	Sex	Dimensions													Thread Size
		A	B	C	D	E	F	G	H	J	K	L	M	N	
11	Std.	1.705 [43.31]	.420 [10.67]	.094 [2.39]	.687 [17.45]	.720 [18.29]	.844 [21.44]	1.125 [28.58]	.125 [3.18]	.840 [21.34]	.817 [20.75]	.935 [23.75]	1.425 [36.20]	.975 [24.77]	5/8-24 UNEF-2A
	Rev.	1.670 [49.78]											1.925 [49.78]		
13	Std.	1.705 [43.31]	.420 [10.67]	.094 [2.39]	.812 [20.62]	.859 [21.82]	.969 [24.61]	1.281 [32.54]	.125 [3.18]	.979 [24.87]	.869 [22.07]	1.072 [27.23]	1.425 [36.20]	1.100 [27.94]	3/4-20 UNEF-2A
23	Std.	2.070 [52.58]	.520 [13.21]	.156 [3.96]	1.438 [36.53]	1.600 [40.64]	1.438 [36.53]	1.750 [44.45]	.150 [3.81]	1.610 [40.89]	1.500 [38.10]	1.726 [43.89]	1.785 [45.34]	1.766 [44.86]	1-3/8-18 UNEF-2A

Note: All part numbers are RoHS Compliant.

Two-Piece Sealed Circular Plastic Connectors

Product Facts

- Economical environmentally sealed connector designed for industrial applications
- Meets major Industrial Standards
- High strength, impact resistant thermoplastic housing, rated UL 94V-0
- Contains wire entry, peripheral, and full interfacial seals
- AMP POWERBAND precision formed power contact (Series 5 and 6)
- Type III+ precision formed signal/low current contacts (Series 6)

Technical Documents

Instruction Sheet
408-4317 Two-Piece Sealed CPC Connectors
Product Specification
108-1579 Sealed CPC Connectors with Removable Contacts
Test Report – 501-517

Sealed CPC connectors are the latest additions to the growing family of AMP Circular Plastic Connectors. Sealed CPC connectors were developed as part of the Series 5 and 6 product line, specifically to meet the increasing demand for an economical environmentally sealed connector.
Sealed CPC connectors are designed to meet the requirements of UL, CSA, and VDE for environmentally sealed connectors used in industrial applications.
In addition, sealed CPC connectors are designed to meet the latest SAE and ASAE requirements as outlined in the standards listed here.
Sealed CPC connectors incorporate the latest technology in thermoplastic design and use the new AMP POWERBAND precision formed high current contact.
Illustrated above are the Series 5 (power) and Series 6 (power/signal mix) sealed connector configurations.

Industry Standards Two-Piece Sealed CPC connectors meet

- IP 65

Performance Characteristics

Operating Temperature Range
-55°C to +105°C
[-67°F to +221°F]

UL Voltage Rating
Series 5 600 V (AC or DC)
Series 6 250 V (AC or DC)
.125 POWERBAND Power Contact –
50 amps, single contact rating at 30°C T-Rise
Type III+ Contacts –
13 amps, single contact rating at 30°C T-Rise

Flammability Rating
UL 94V-0 rated

Sealing Capability
Per IP 65

Housing Material
High strength, impact resistant thermoplastic

Fluid Resistance
Diesel fuel, gear and engine lubricants, gasoline, anti-freeze, hydraulic fluid, water

Dimensions are in inches and millimeters unless otherwise specified. Values in brackets are metric equivalents.
Dimensions are shown for reference purposes only. Specifications subject to change.

Two-Piece Sealed CPC, Series 5, Reverse Sex

Listed part numbers are for connectors only; **contacts must be ordered separately.**

Square Flange Receptacle

Free-Hanging Receptacle

Plug

Seal Kit

Reverse Sex (Receptacles accept socket contacts, Plugs accept pin contacts)

Arrangement			Square Flange Receptacle	Free-Hanging Receptacle	Plug
Shell Size	No. of Pos.	Type			
17-3 – Connector			213889-2	213890-2	213905-1
17-3 – Wire Entry Seal Kit			213899-1	213899-1	213899-1

Kit includes (1) Silicon Wire Entry Seal and (1) Pressure Plate.
* Wire entry seals require cable clamp kits.

Replacement Coupling Ring

Arrangement		Part No.
Shell Size	No. of Positions	
17-3		213810-1

Material

Housing – Nylon, glass-filled
UL rated 94V-0, black

Related Product Data

Contacts – Pages 45
Accessories – Page 58-59
Application Tooling – Pages 81-83
Technical Documents – Page 84

Cable clamp kit 213902-3 required. (Similar to 206322-9. See page 38 for dimensional detail of cable clamp) or cable clamp kit 213904-3. (Similar to 206070-8.
See page 39 for dimensional detail of cable clamp).

Note: Minimum insulation diameter is .156 [3.96]; Maximum insulation diameter is .260 [6.60].

Note: All part numbers are RoHS Compliant.

Two-Piece Sealed CPC, Series 6, Reverse Sex

Listed part numbers are for connectors only; **contacts must be ordered separately.**

Square Flange Receptacle

Free-Hanging Receptacle

Plug

Seal Kit

Reverse Sex (Receptacles accept socket contacts, Plugs accept pin contacts)

Arrangement			Square Flange Receptacle	Free-Hanging Receptacle	Plug
Shell Size	No. of Pos.	Type			
17-10 – Connector			213893-2	213894-2	213906-1
17-10 – Wire Entry Seal Kit			213900-1	213900-1	213900-1

Kit includes (1) Silicon Wire Entry Seal and (1) Pressure Plate.
* Wire entry seals require cable clamp kits.

Replacement Coupling Ring

Arrangement		Part No.
Shell Size	No. of Positions	
17-10		213810-1

Material

Housing – Nylon, glass-filled UL rated 94V-0, black

Related Product Data

Contacts – Pages 19-23 and 45
Accessories – Page 58-59
Application Tooling – Pages 81-83
Technical Documents – Page 84

Cable clamp kit 213902-3 required. (Similar to 206322-9. See page 38 for dimensional detail of cable clamp) or cable clamp kit 213904-3. (Similar to 206070-8. See page 39 for dimensional detail of cable clamp).

Note:
Minimum insulation diameter is .156 [3.96]; maximum insulation diameter is .260 [6.60] for power contacts.
Minimum insulation diameter is .060 [1.50]; maximum insulation diameter is .130 [3.30] for signal contacts.

Dimensions are in inches and millimeters unless otherwise specified. Values in brackets are metric equivalents.
Dimensions are shown for reference purposes only. Specifications subject to change.

Two-Piece Sealed CPC Receptacles

with Pre-Installed, Bonded Peripheral Seal

Listed part numbers are for connectors only; **contacts must be ordered separately.**

Material and Finish

Housing – Thermoplastic, UL 94V-0 rated, black
Seal – Elastomer, gray

Related Product Data

Contacts – Pages 19-23
Contact Arrangement – Page 24
Accessories – Pages 39-43 and 58-59
Performance Characteristics – Page 6
Application Tooling – Pages 81-83
Technical Documents – Page 84

Arrangement		Sex	Square Flange Part No.	Free-Hanging Receptacle	Mates with Plug Part No.
Shell Size	No. of Positions		With Mounting Holes		
11-4		Standard	206061-2	206153-2	206060-1
		Reverse	206430-3	—	206429-1
13-7		Standard	211401-3	—	211399-1
13-9		Standard	206705-3	206705-4	206708-1
17-16		Standard	206036-4	206036-5	206037-1
17-14		Reverse	206043-4	206043-5	206044-1
23-24		Standard	206838-3	206838-4	206837-1
23-37		Standard	206151-3	206151-4	206150-1
		Reverse	206306-3	206306-4	206305-1

Notes: 1. For detailed performance data on peripheral seals, refer to Product Specification No. 108-10024.
2. Receptacles mate with Series 1 plugs found on page 10.

Peripheral Seals	
Shell Size	Part Number
11	2267473-1
13	2267473-4
17	2267473-2
23	2267473-3

Note: All part numbers are RoHS Compliant.

Two-Piece CPC Sealing Accessories

Wire Entry Seal Kits
for Plug and Receptacle Housings

Material and Finish
Seal – Silicon, black
Pressure Plate – Nylon, black

Arrangement		Insulation Dia. Range	Kit for Pins	Kit for Sockets
Shell Size	No. of Pos.			
13-9		.075-.100 [1.91-3.18]	213926-1	213925-1
17-3		.178-.265 [4.52-6.73]	213899-1	213899-1
17-10		.178-.265 [4.52-6.73]	213900-1	213900-1
		.075-.100 [1.91-3.18]	213900-1	213900-1
17-14		.075-.100 [1.91-3.18]	213919-2	213919-1
17-16		.075-.100 [1.91-3.18]	213920-2	213920-1

Notes: 1. Kits include one Gang Seal and one Pressure Plate marked for cavity identification.
2. Arrangement No. 17-10 Insulation Dia. Range **.176-.265** [4.52-6.73] for two holes, **.075-125** [1.95-3.18] for eight holes.

One-Piece or Two-Piece Sealed CPC Sealing Accessories

Flange Seals

Shell Size	Part No.
11	81665-3
13	81665-4
17	81665-2
23	81665-5

Material
Neoprene, black

Dimensions are in inches and millimeters unless otherwise specified. Values in brackets are metric equivalents.
Dimensions are shown for reference purposes only. Specifications subject to change.

Sealing Caps (Receptacles only)

Sealing caps are used to protect exposed contacts of unmated receptacles.

Shell Size	Series	Plastic Strap Part No.	Metal Bead Chain Part No.
11	1, 2	206903-2	208800-1
13	1	211870-2	213485-1
17	1, 2, 3	207445-3	208652-1
23	1, 3, 4	207446-3	208680-1
	2	207446-4	208680-2

Material and Finish

Cap – Thermoplastic, heat stabilized, fire resistant, self-extinguishing, 94V-1 rated, black
Sealing Gasket – Neoprene, black
Bead Chain – Steel, nickel plated
Bead Chain Coupling – Brass, plated nickel

Cable Entry Seals

Heat Shrinkable Sealing Boots

Cable entry seals are used with jacketed cable to provide an environmentally sealed wire-to-connector system. They can be used with either plugs or receptacles.

Shell Size	Expanded Wall Thickness	Sealing Range (Dia.)	Max. Recovered Inside Diameter	Part No.
11	.050 [1.27] Ref.	.250-.600 [6.35-15.24]	.160 [4.06]	54010-4
	.050 [1.27] Ref.	.250-.600 [6.35-15.24]	.250 [6.35]	54010-1
13	.060 [1.52] Ref.	.375-.725 [9.53-18.42]	.300 [7.62]	54123-1
17	.060 [1.52] Ref.	.400-.875 [10.16-22.22]	.375 [9.52]	54011-1
	.060 [1.52] Ref.	.400-.875 [10.16-22.22]	.375 [9.52]	54011-3
23	.070 [1.78] Ref.	.550-1.250 [13.97-31.75]	.500 [12.70]	54012-1

Thick Wall Boots

Material

Internal Sleeve – Nylon
Outer Tubing – Polyolefin, black

Thin Wall Boot

Material

Inter Sleeve – Nylon
Outer Tubing – Polyolefin
Expanded Wall Thickness – .020 [0.51]
Max. Recovered Wall Thickness – .040 [10.16]
Sealing Range – .250 [6.35]-.500 [12.70] Dia.

Shell Size 17
Part No. 213933-1

Note: All part numbers are RoHS Compliant.

Jacketed Cable Seals (Shell Size 23)

A jacketed cable seal kit provides an environmentally sealed connection for jacketed cable.

Sealing Range (Dia.)	Kit Number
.300-.450 [7.62-11.43]	207052-1
.450-.600 [11.43-15.24]	207052-2
.600-.875 [15.24-22.22]	207052-3

Material

Peripheral Seal – Grey elastomer
Collar – Aluminum
Jacketed Cable Seal – Black rubber
Back-Shell Extender – Black glass-filled thermoplastic
Special Clamp Saddle – Black thermoplastic

Note: Jacketed cable seals must be used with large cable clamps and can be used on plugs or receptacles. Large cable clamps are to be ordered separately (see page 38). Each jacketed cable seal kit includes:

- Peripheral Seal – to be discarded if kit is used on plug. Additional seals may be purchased (see page 51)
- Collar – provides bearing surface for back-shell extender
- Jacketed Cable Seal
- Back-Shell Extender
- Special Clamp Saddle – to be used in lieu of clamping insert supplied with large cable clamp

Rubber Boot

Rubber boots are used with jacketed cable to provide splashproof connections for Series 1 and Series 3 connectors. (Not for Metal Shell Connectors.)

Shell Size	Cable Dia. Sealing Range	Part No.
11	.219-.438 [5.56-11.13]	206304-1

Notes:

1. Rubber boots are recommended for use with jacketed cable and can be used on plugs or receptacles, except Series 2 connectors.
2. For detailed performance data on rubber boots, refer to Product Specification No. 108-10024.

Material

Black neoprene

Dimensions are in inches and millimeters unless otherwise specified. Values in brackets are metric equivalents.
Dimensions are shown for reference purposes only. Specifications subject to change.

MIL-C-5015 Style Circular Plastic Connectors

Product Facts

- Intermateable with other manufacturers' Metal-Shell Sizes 20-14 and 18-10, MIL-C-5015 Style Connectors
- High impact resistant plastic housing
- Lighter weight
- Lower cost
- Industry accepted, Type III+ pin and socket contacts, available on reels in strip-form for high volume, low cost, automatic machine terminations
- Contacts also available in loose piece form for low volume, prototype or maintenance and repair
- Housing designed to prevent mismating with other insert arrangements
- Recognized under the Component Program of Underwriters Laboratories Inc., File No. E28476
- Certified by Canadian Standards Association, File No. LR 7189

This new addition to the AMP Circular Plastic Connector Line is specifically designed to be intermateable with other manufacturers' Metal-Shell sizes 20-14 and 18-10, MIL-C-5015 Style Connector Systems. The high impact resistant plastic housing offers the advantages of lighter weight and lower cost than existing metal shell connectors. In addition, the connector design prevents mismating when used with other insert arrangements. As part of the AMP Multimate Family of Connectors, the MIL-C-5015 style connector offers the additional economies of crimp Type III+ Pin and Socket contacts in reel-mounted, strip-form for high volume automatic machine termination, as well as in loose piece form for low volume, prototype or maintenance and repair.

Technical Documents

Application Specification
114-10038 CPC Connectors
114-10004 Contacts, Type III+

Product Specifications
108-10024 CPC Connectors
108-10042 Contacts, Type III+

Instruction Sheets

408-7582	Accessories for CPC Connectors
408-7592-A	Improved Strain Relief Clamps for CPC Connectors
408-7593	CPC Connectors

Note: All part numbers are RoHS Compliant.

Plugs and Receptacles (Shell Size 20-14)

Plug Kit, Unassembled

Reverse Sex (Accepts pins)
Part Number 213571-2
without Cable Clamp

Receptacle, Square Flange

Reverse Sex (Accepts sockets)
Part Number 213570-1

Receptacle, Free-Hanging

Reverse Sex (Accepts sockets)
Part Number 213650-1

Standard Sex (Accepts sockets)
Part Number 213652-1
without Cable Clamp

Standard Sex (Accepts pins)
Part Number 213651-1

Plugs and Receptacles (Shell Size 18-10)

Plug Kit, Unassembled

Reverse Sex (Accepts pins)
Part Number 213671-1
without Cable Clamp

Receptacle, Square Flange

Reverse Sex (Accepts sockets)
Part Number 213667-1

Receptacle, Free-Hanging

Reverse Sex (Accepts sockets)
Part Number 213668-1

Cable Clamps		O. D. Max.
Part No.	Type	
206070-8	standard	.453 [11.51]
206322-9	large	.703 [17.86]

Dimensions are in inches and millimeters unless otherwise specified. Values in brackets are metric equivalents.
Dimensions are shown for reference purposes only. Specifications subject to change.

Type III+ Contacts

Wire Size Range		Ins. Dia. Range	Contact Finish Code	Strip Form Contact No.		Loose Piece Contact No.		Strip Form Applicator	Hand Tool Part No.
AWG	mm²			Pin	Socket	Pin	Socket		
24-20	0.2-0.6	.060-.135 [1.52-3.43]	B	213605-7	1-66563-1	—	66565-7	2151669-□††	91542-1
			A	—	66563-8	—	66565-4		
18-14	0.8-2	.110-.150 [2.79-3.81]	B	213603-5	66598-9	213603-6	66601-9	2151405-□††	91521-1
			A	—	66598-2	—	66601-2		

†† **Note:** Applicators for TE semiautomatic or fully-automatic termination equipment are available. Contact Technical Support.
*** MIL-C-5015 style connectors require a longer Multimate pin contact. This contact is .145 [3.68] longer than the standard Multimate pin contacts. It is not for use in other Multimate connectors, socket contacts are standard Multimate Type III+ contacts.

Extraction Tool Part No. 305183

Note: Gold-plated contacts should not be mated with tin or silver plated contacts.

Material

Contact – Brass
Spring – Stainless Steel

Contact Finish

A – .000030 [0.00076] gold on the electrical engagement area over .000030 [0.00076] min. nickel
B – Tin

Related Product Data

Application Tooling –
Pages 81-83

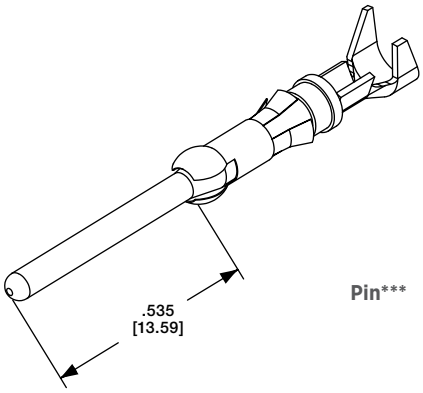

Pin***

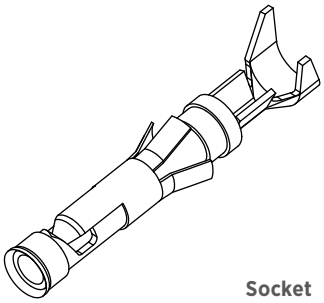

Socket

Note: All part numbers are RoHS Compliant.

Miniature Circular Plastic Connectors

Product Facts

- Two shell sizes: Size 8 (1-4) or Size 11 (5-9) contact positions
- Pre-positioned 1/4 turn coupling ring with positive lock and alignment feature
- Unique contact pattern for each position size helps prevent accidental mating with other position sizes
- Sealed to IP67 (Protected against immersion in water up to 1 meter for 1/2 hour)
- Front or rear jam nut panel mounting
- No assembly required
- Receptacle available in free-hanging or panel mount versions
- Alternate keys available

AMP Miniature Circular Plastic Connectors (CPC) are available in wire-to-wire and wire-to-panel configurations.
Utilizes existing Mini-Universal MATE-N-LOK stamped and formed contacts designed for up to 500 mating cycles when plated with gold or up to 50 cycles with tin plating.
Nylon housings offer good resistance to a wide range of chemical agents while the IP67 sealing helps prevent ingress of dirt or fluids that could have an adverse effect on the contact interface.
Helps provide robust solutions in industrial, instrumentation and transportation applications where size, contact density and environmental exposure are primary concerns.

Technical Documents

Product Specification
108-2079 Miniature CPC Connectors
Application Specification
114-13105

Material and Finish

Seal, Wire Entry – Elastomer, yellow or white
Seal, Peripheral – Elastomer, gray
Housing – Thermoplastic, black
Protector, Seal – Thermoplastic, natural
Ring, Coupling – Thermoplastic, black
Nut, Jam – Brass, nickel plated
Plate, Seal Retention – Thermoplastic, black

Dimensions are in inches and millimeters unless otherwise specified. Values in brackets are metric equivalents.
Dimensions are shown for reference purposes only. Specifications subject to change.

Receptacles and Plugs, Shell Size 8 (4 Position shown)

Receptacle Assembly, Panel Mount

(Order pin contacts separately – see page 66)

Housing Part Numbers

Arrangement		Insulation Diameter Range	Housing Part Numbers		
Shell Size	No. of Pos.		Panel Mount Receptacle	Free-Hanging Receptacle	Plug
8	1	.035-.059 [.89-1.5]*	1445539-1	1445526-1	1445536-1
		.059-.110 [1.5-2.39]	1445539-3	1445526-3	1445536-3
8	2	.035-.059 [.89-1.5]*	1445538-1	—	1445535-1
		.059-.110 [1.5-2.39]	1445538-3	1445522-3	1445535-3
8	3	.035-.059 [.89-1.5]*	1445537-1	1445510-1	1445534-1
		.059-.110 [1.5-2.39]	1445537-3	1445510-3	1445534-3
8	4	.035-.059 [.89-1.5]*	1445421-1	1445389-1	1445390-1
		.059-.110 [1.5-2.39]	1445421-3	1445389-3	1445390-3

Note: Alternate keys available (115° part numbers shown in above chart)

* Insertion Tip (Seal Protector) **Part No. 1604816-1** recommended for use when inserting socket contacts within this insulation range.

Receptacle Assembly, Free-Hanging

(Order pin contacts separately – see page 66)

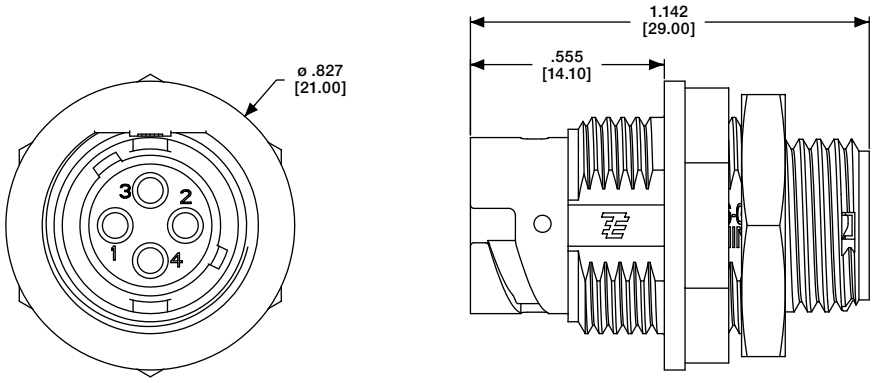

Plug Assembly

(Order socket contacts separately – see page 66)

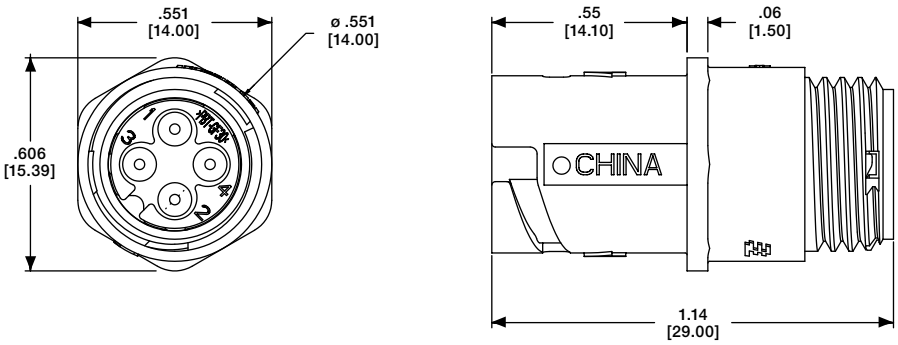

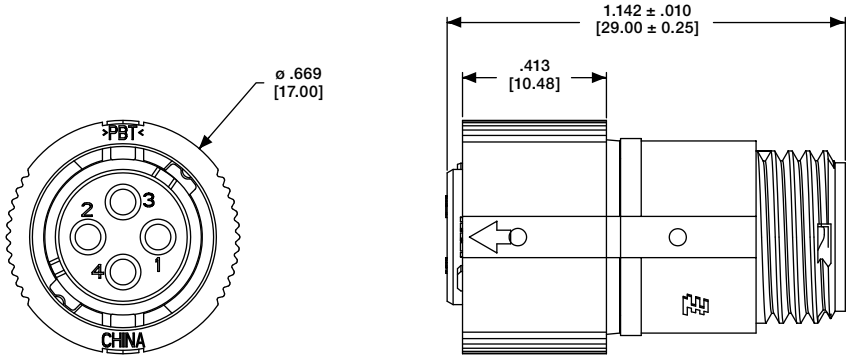

Related Product Data

Part Numbers – Page 65
Contacts – Page 66
Accessories – Page 66

Note: All part numbers are RoHS Compliant.

Receptacles and Plugs, Shell Size 11 (9 Position shown)

Receptacle Assembly, Panel-Mount

(Order pin contacts separately – see page 66)

Receptacle Assembly, Free-Hanging

(Order pin contacts separately – see page 66)

(Order socket contacts separately – see page 66)

Housing Part Numbers

Arrangement		Insulation Diameter Range	Housing Part Numbers		
Shell Size	No. of Pos.		Panel Mount Receptacle	Free-Hanging Receptacle	Plug
11	5	.035-.059 [.89-1.5]*	1445824-1	1445829-1	1445820-1
		.059-.110 [1.5-2.39]	1445824-3	1445829-3	1445820-3
11	6	.035-.059 [.89-1.5]*	1445823-1	1445828-1	1445819-1
		.059-.110 [1.5-2.39]	1445823-3	1445828-3	1445819-3
11	7	.035-.059 [.89-1.5]*	1445822-1	1445827-1	1445818-1
		.059-.110 [1.5-2.39]	1445822-3	1445827-3	1445818-3
11	8	.035-.059 [.89-1.5]*	1445821-1	1445826-1	1445817-1
		.059-.110 [1.5-2.39]	1445821-3	1445826-3	1445817-3
11	9	.035-.059 [.89-1.5]*	1445816-1	1445825-1	1445807-1
		.059-.110 [1.5-2.39]	1445816-3	1445825-3	1445807-3

Note: Alternate keys available (115° part numbers shown in above chart)

* Insertion Tip (Seal Protector) **Part No. 1604816-1** recommended for use when inserting socket contacts within this insulation range.

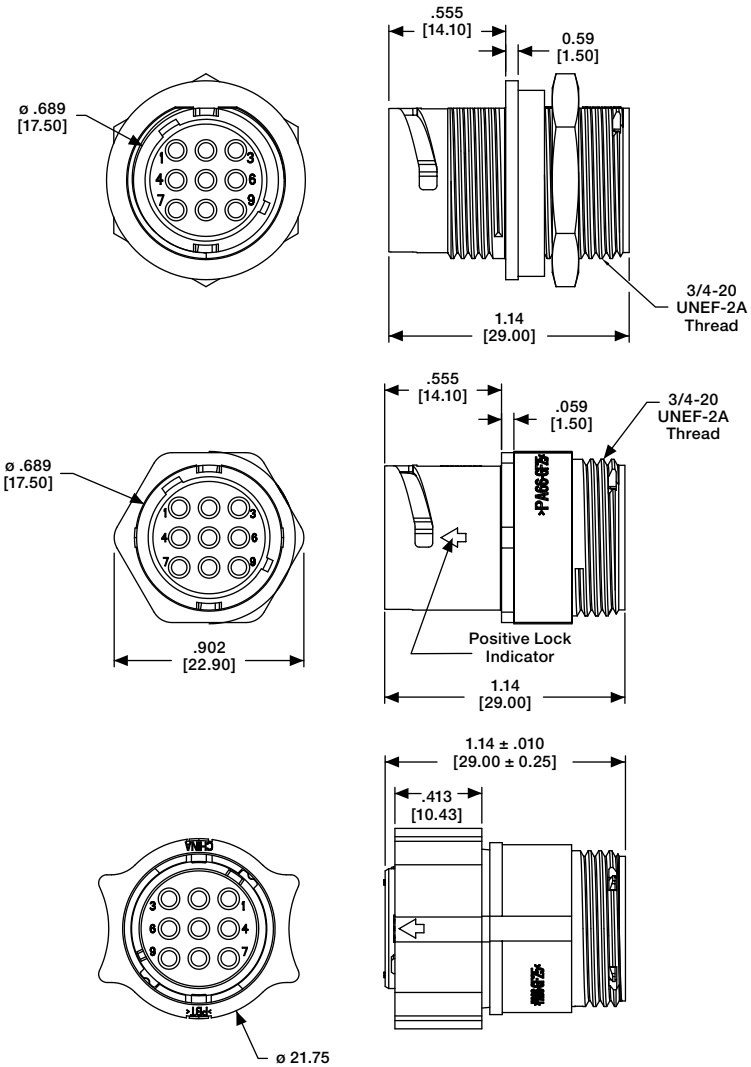

Dimensions are in inches and millimeters unless otherwise specified. Values in brackets are metric equivalents.
Dimensions are shown for reference purposes only. Specifications subject to change.

Contacts and Application Tooling

Pin (for Receptacles)

Socket (for Plugs)

Wire Size Range AWG [mm²]	Ins. Dia. Range	Material and Finish	Contact Part Numbers				OCEAN Applicator Part No.	Hand Tool Part No.
			Pin		Socket			
			Strip Form	Loose Piece	Strip Form	Loose Piece		
30-26 [.05-.12]	035-.050 [.889-1.27]	Brass, Pre-tin	770835-1	794059-1	770834-1	794058-1	2266136-1	2217755-1
		Phos. Brz., Pre-tin	—	—	770834-4	—		
		Brass, Duplex[1]	1-770835-0	1-794059-0	1-770834-0	1-794058-0		
		Phos. Brz., Duplex[1]	—	—	1-770834-1	—		
26-22 [.12-.3]	.047-.069 [1.19-1.75]	Brass, Pre-tin	770901-1	770985-1	770902-1	770986-1	2151017-1 or 2266674-□	91529-1
		Phos. Brz., Pre-tin	—	—	770902-4	—		
		Brass, Duplex[1]	1-770901-0	1-770985-0	1-770902-0	1-770986-0		
		Phos. Brz., Duplex[1]	—	—	1-770902-1	—		

[1] Duplex Finish – Plated with .000030 [.000762] min. gold in mating area and .000100 [.00254] min. tin in crimping area over .000050 [.00127] min. nickel underplate on entire contact.
Note: All part numbers are RoHS Compliant.

Contact Extraction Tool
Part No. 189727-1
Instruction Sheet 408-4118

Contact Insertion Tool
Part No. 91002-1
Instruction Sheet 408-7347
(For inserting contacts applied to small diameter wire)

Insertion Tip (Seal Protector)
Part No. 1604816-1
(For inserting socket contacts applied to small diameter wire)

Accessories (All accessories must be ordered separately.)

Strain Reliefs

Shell Size	Part Number	
	Straight	Right-Angle
8	1445730-1	1445771-1
11	1445856-1	1546746-3[1]
		1546746-4[2]

[1] Open Style [2] With Cover

Heat Shrink Boots

Shell Size	Part Number
8	1546997-1
11	1546921-1

Flange Seals

Shell Size	Part Number
8	1445420-1
11	1445420-2

Jam Nuts

Shell Size	Thread	Part Number
8	5/8-24 UNEF-2B	1604196-1
11	3/4-20 UNEF-2B	1445904-1

Dust Caps

Shell Size	Part Number
8	1604089-1
11	1604089-2

Note: All part numbers are RoHS Compliant.

Metal-Shell Circular Plastic Connectors

Product Facts

- Economical combination of thermoplastic UL 94V-0 rated connector housings and metal shells
- Available in three sizes:
  - Series 1–Accepts Multimate contacts, shell sizes 14-5, 14-7, 22-16, 28-24, and 28-37 standard sex; 14-5, 14-7, 22-14, and 28-37 reverse sex
  - Series 2–Accepts 20 DF and 20 DM contacts, shell sizes 22-28 and 28-63 standard sex; 22-28 and 28-57 reverse sex
  - Series 3–Accepts Type XII power contacts, shell sizes 22-3 and 28-7 standard and reverse sex
  - Series 4–Accepts Multimate contacts, and Type XII power contacts, shell size 28-16M and 28-22M standard sex
- Compatible with MIL Spec metal housing type connectors
- Choice of application tooling to meet production requirements
- Product Specification: 108-10040
- Test Report: 501-105
- Instruction Sheet: 408-6641

AMP Metal-Shell Circular Plastic Connectors offer the reliability of higher priced all metal connectors at a fraction of the cost, and are offered in the more popular contact configurations. Connector housings are made of lightweight, sturdy, thermoplastic material that are UL 94V-0 rated, with zinc alloy, nickel plated shells for added strength and protection. These connectors are available in a variety of configurations to meet your signal, low current and high current requirements. Operating temperatures range from -55°C to +125°C [-67°F to +257°F].

Signal and low current is provided by a choice of AMP Multimate contacts: .062 [1.57] pin diameter and 20 DF and 20 DM contacts, .040 [1.02] pin diameter. High current requirements are met by the Type XII capable of carrying up to 35 amperes of current.
These quick connect/disconnect circular connectors feature polarized housings to prevent mismating with other insert arrangements.
AMP Metal-Shell Circular Plastic Connectors are available in square flange receptacles and freehanging plug connectors.

For additional economy, industry accepted AMP Type III+ pin and socket contacts are available on reels in strip-form for high volume, low cost, automatic machine terminations. For low volume, prototype or maintenance and repair Type III+ contacts are also available in loose piece form.

Dimensions are in inches and millimeters unless otherwise specified. Values in brackets are metric equivalents.
Dimensions are shown for reference purposes only. Specifications subject to change.

Receptacles and Plugs, Series 1, Standard Sex

Square Flange Receptacle

Plug

Listed part numbers are for connectors only; **contacts must be ordered separately.**

Arrangement		Square Flange Receptacle	Plug Part No.	
Shell Size	No. of Pos.		without TETRASEALS Ring	with TETRASEALS Ring
14-5		208719-1	208718-1	208718-2
14-7		208715-1	208714-1	208714-2
22-16		208489-1	208488-1	208488-3
28-24		208459-1	208457-1	208457-3
28-37		208471-1	208470-1	208470-3

Note: Maximum wire insulation diameter is .100 [2.54], except arrangements 14-5 and 28-24 are .150 [3.81] max.

Material and Finish

SQUARE FLANGE RECEPTACLE

Housing – Thermoplastic, UL 94V-0 rated, black
Metal-Shell – Zinc alloy, plated nickel
Grooved Pin – Steel alloy, plated nickel

PLUG

Housing – Thermoplastic, UL 94V-0 rated, black
Metal-Shell – Zinc alloy, plated nickel
Tetraseal Seal – Fluorocarbon
Retainer Ring – Stainless steel
Coupling Ring – Zinc alloy, plated nickel

Related Product Data

Contacts – Pages 19-23
Contact Arrangement – Page 70
Component Dimensions – Page 79
Accessories – Page 80
Performance Characteristics – Page 6
Application Tooling – Pages 81-83
Technical Documents – Page 84

TETRASEALS Ring

(Installed in plugs only.)

The TETRASEALS Ring provides splashproof sealing between mating metal shells. It is located behind the plug shell external keys (under the coupling ring). When mated with a receptacle, the ring is compressed against the inside diameter of the mating end edge of the receptacle shell.

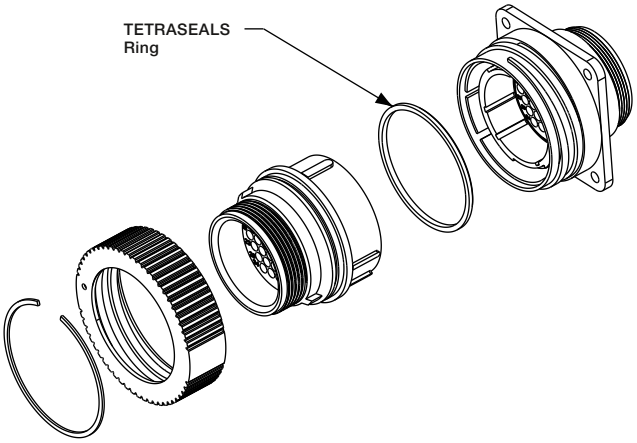

Note: All part numbers are RoHS Compliant.

Receptacles and Plugs, Series 1, Reverse Sex

Square Flange Receptacle

Arrangement		Square Flange Receptacle	Plug Part No.	
Shell Size	No. of Pos.		without TETRASEALS Ring	with TETRASEALS Ring
14-5		208721-1	208720-1	—
14-7		208717-1	208716-1	—
22-14		208487-1	208486-1	208486-3
28-37		208473-1	208472-1	—

Note: Maximum wire insulation diameter is .100 [2.54], except arrangements 14-5 and 28-24 are .150 [3.81] max.

Plug

Listed part numbers are for connectors only; **contacts must be ordered separately.**

Material and Finish

SQUARE FLANGE RECEPTACLE

Housing – Thermoplastic, UL 94V-0 rated, black
Metal-Shell – Zinc alloy, plated nickel
Grooved Pin – Steel alloy, plated nickel

PLUG

Housing – Thermoplastic, UL 94V-0 rated, black
Metal-Shell – Zinc alloy, plated nickel
Tetraseal Seal – Fluorocarbon
Retainer Ring – Retainer Ring
Coupling Ring – Zinc alloy, plated nickel

Related Product Data

Contacts – Pages 19-23
Contact Arrangement – Page 70
Component Dimensions – Page 79
Accessories – Page 80
Performance Characteristics – Page 6
Application Tooling – Pages 81-83
Technical Documents – Page 84

TETRASEALS Ring

(Installed in plugs only.)

The TETRASEALS Ring provides splashproof sealing between mating metal shells. It is located behind the plug shell external keys (under the coupling ring). When mated with a receptacle, the ring is compressed against the inside diameter of the mating end edge of the receptacle shell.

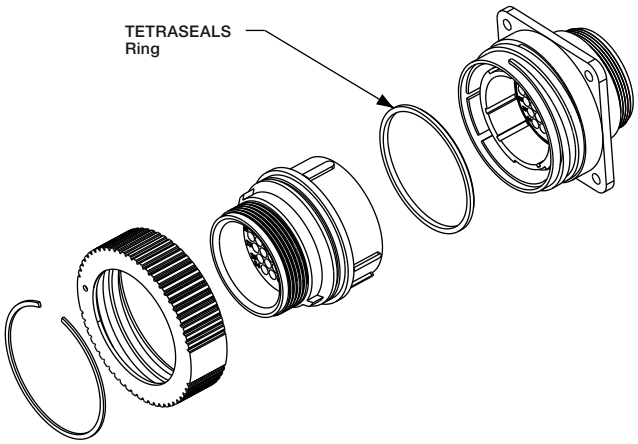

Dimensions are in inches and millimeters unless otherwise specified. Values in brackets are metric equivalents.
Dimensions are shown for reference purposes only. Specifications subject to change.

Contact Arrangements, Series 1

Shell Size 14

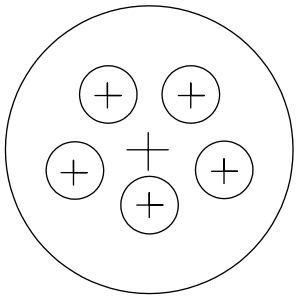

Arrangement 14-5
Max. Wire Ins. Dia. = .150 [3.81]

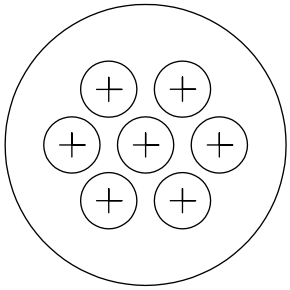

Arrangement 14-7
Max. Wire Ins. Dia. = .100 [2.54]

Shell Size 22

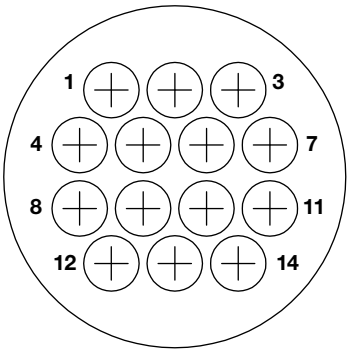

Arrangement 22-14
Max. Wire Ins. Dia. = .100 [2.54]

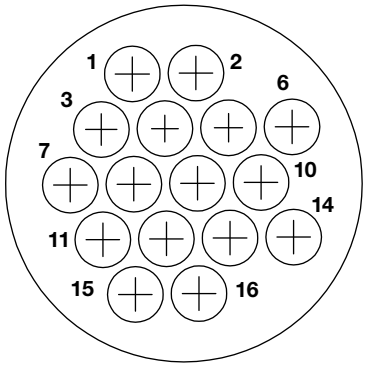

Arrangement 22-16
Max. Wire Ins. Dia. = .100 [2.54]

Shell Size 28

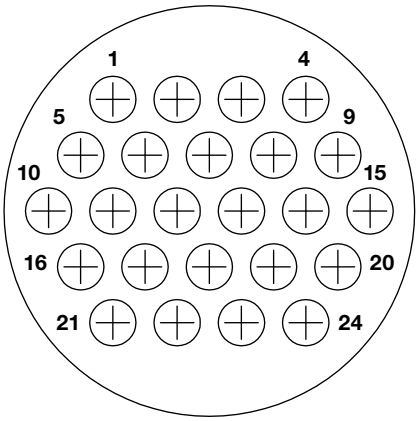

Arrangement 28-24
Max. Wire Ins. Dia. = .150 [3.81]

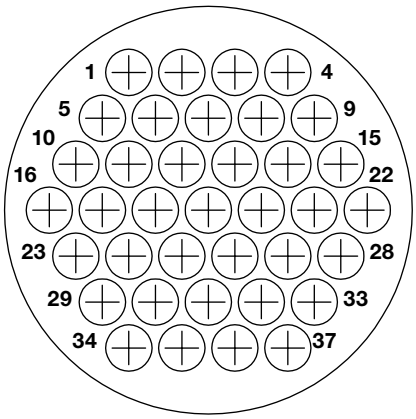

Arrangement 28-37
Max. Wire Ins. Dia. = .100 [2.54]

Note: Contact arrangements shown are of pin mating face (plug or receptacle). Socket mating face is mirror image.

Note: All part numbers are RoHS Compliant.

Receptacles and Plugs, Series 2, Standard Sex

Square Flange Receptacle

Plug

Listed part numbers are for connectors only; **contacts must be ordered separately.**

Arrangement		Part No.	
Shell Size	No. of Positions	Square Flange Receptacle	Plug without Tetraseals Ring
22-28		208491-1	208490-1
28-63		208477-1	208476-1

Material and Finish

SQUARE FLANGE RECEPTACLE

Housing and Retention Insert – Thermoplastic, UL 94V-0 rated, black
Metal-Shell – Zinc alloy, plated nickel
Grooved Pin – Steel alloy, plated nickel

PLUG

Housing – Thermoplastic, UL 94V-0 rated, black
Metal-Shell – Zinc alloy, plated nickel
Tetraseal Seal – Fluorocarbon
Retainer Ring – Stainless steel
Coupling Ring – Zinc alloy, plated nickel

Related Product Data

Contacts – Pages 29-30
Contact Arrangement – Page 73
Component Dimensions – Page 79
Accessories – Pages 39-43 and 80
Performance Characteristics – Page 6
Application Tooling – Pages 81-83
Technical Documents – Page 84

Dimensions are in inches and millimeters unless otherwise specified. Values in brackets are metric equivalents.
Dimensions are shown for reference purposes only. Specifications subject to change.

Receptacles and Plugs, Series 2, Reverse Sex

Square Flange Receptacle

Plug

Listed part numbers are for connectors only; **contacts must be ordered separately.**

Arrangement		Part No.	
Shell Size	No. of Positions	Square Flange Receptacle	Plug without Tetraseals Ring
22-28		208493-1	208492-1
28-57		208475-1	208474-1

Material and Finish

SQUARE FLANGE RECEPTACLE

Housing and Retention Insert – Thermoplastic, UL 94V-0 rated, black
Metal-Shell – Zinc alloy, plated nickel
Grooved Pin – Steel alloy, plated nickel

PLUG

Housing – Thermoplastic, UL 94V-0 rated, black
Metal-Shell – Zinc alloy, plated nickel
Tetraseal Seal – Fluorocarbon
Retainer Ring – Stainless steel
Coupling Ring – Zinc alloy, plated nickel

Related Product Data

Contacts – Pages 29-30
Contact Arrangement – Page 73
Component Dimensions – Page 79
Accessories – Pages 39-43 and 80
Performance Characteristics – Page 6
Application Tooling – Pages 81-83
Technical Documents – Page 84

Note: All part numbers are RoHS Compliant.

Contact Arrangements, Series 2

Shell Size 22

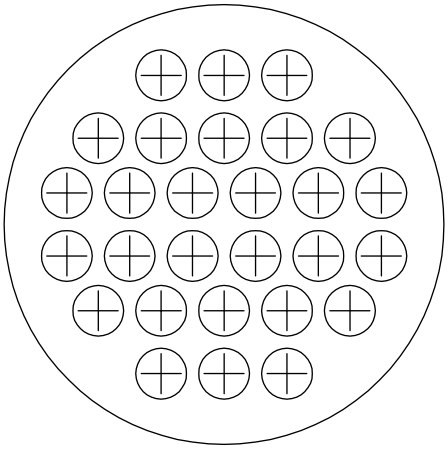

Arrangement 22-28
Max. Wire Ins. Dia. = .068 [1.73]

Note: Contact arrangements shown are of pin mating face (plug or receptacle). Socket mating face is mirror image.

Shell Size 28

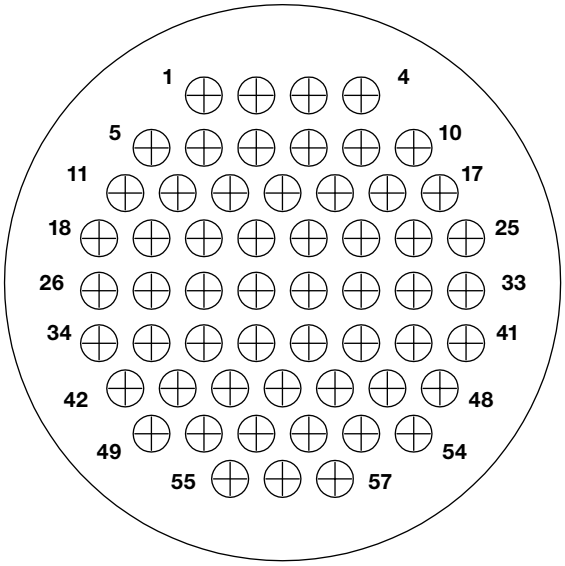

Arrangement 28-57
Max. Wire Ins. Dia. = .068 [1.73]

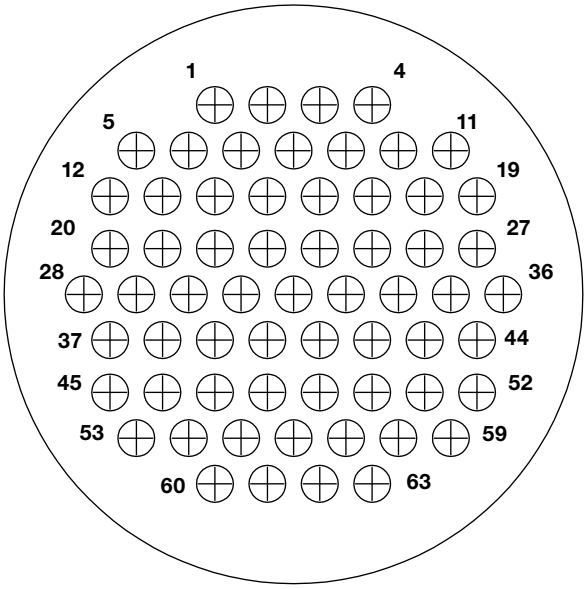

Arrangement 28-63
Max. Wire Ins. Dia. = .068 [1.73]

Dimensions are in inches and millimeters unless otherwise specified. Values in brackets are metric equivalents.
Dimensions are shown for reference purposes only. Specifications subject to change.

Receptacles and Plugs, Series 3, Standard Sex

Square Flange Receptacle

Plug

Listed part numbers are for connectors only; **contacts must be ordered separately.**

Arrangement		Square Flange Receptacle	Plug Part No.	
Shell Size	No. of Pos.		without TETRASEALS Ring	with TETRASEALS Ring
22-3		208495-1	208494-1	208494-3
28-7		208483-1	208482-1	—

Material and Finish

SQUARE FLANGE RECEPTACLE

Housing – Thermoplastic, UL 94V-0 rated, black
Metal-Shell – Zinc alloy, plated nickel
Peripheral Seal – Elastomer, grey
Grooved Pin – Stainless steel

PLUG

Housing – Thermoplastic, UL 94V-0 rated, black
Metal-Shell – Zinc alloy, plated nickel
Tetraseal Seal – Fluorocarbon
Retainer Rings – Stainless Steel
Coupling Ring – Zinc alloy, plated nickel

Related Product Data

Contacts – Page 34-35
Contact Arrangement – Page 76
Component Dimensions – Page 79
Accessories – Pages 39-43 and 80
Performance Characteristics – Page 6
Application Tooling – Pages 81-83
Technical Documents – Page 84

TETRASEALS Ring

(Installed in Plugs only)

The TETRASEALS Ring provides splashproof sealing between connector metalshells. It is located behind the plug-shell external keys (under the coupling ring).
When mated with a receptacle, the ring is compressed against the inside diameter of the mating end edge of the receptacle shell.

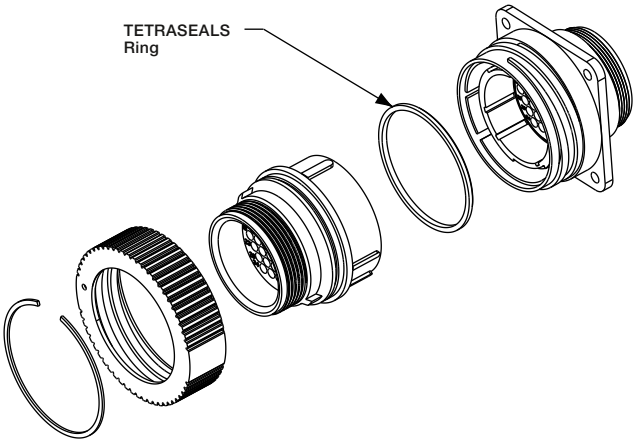

Note: All part numbers are RoHS Compliant.

Receptacles and Plugs, Series 3, Reverse Sex

Square Flange Receptacle

Plug

Listed part numbers are for connectors only; **contacts must be ordered separately.**

Arrangement		Square Flange Receptacle	Plug Part No.	
Shell Size	No. of Pos.		without TETRASEALS Ring	with TETRASEALS Ring
22-3		208497-1	208496-1	—
28-7		208485-1	208484-1	208484-3

Material and Finish

SQUARE FLANGE RECEPTACLE

Housing – Thermoplastic, UL 94V-0 rated, black
Metal-Shell – Zinc alloy, plated nickel
Peripheral Seal – Elastomer, grey
Grooved Pin – Stainless steel

PLUG

Housing – Thermoplastic, UL 94V-0 rated, black
Metal-Shell – Zinc alloy, plated nickel
Tetraseal Seal – Fluorocarbon
Retainer Rings – Stainless Steel
Coupling Ring – Zinc alloy, plated nickel

Related Product Data

Contacts – Page 34-35
Contact Arrangement – Page 76
Component Dimensions – Page 79
Accessories – Pages 39-43 and 80
Performance Characteristics – Page 6
Application Tooling – Pages 81-83
Technical Documents – Page 84

TETRASEALS Ring

(Installed in Plugs only)

The TETRASEALS Ring provides splashproof sealing between connector metalshells. It is located behind the plug-shell external keys (under the coupling ring).
When mated with a receptacle, the ring is compressed against the inside diameter of the mating end edge of the receptacle shell.

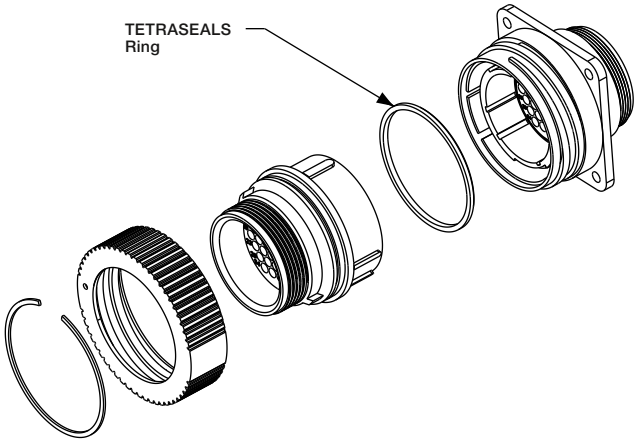

Dimensions are in inches and millimeters unless otherwise specified. Values in brackets are metric equivalents.
Dimensions are shown for reference purposes only. Specifications subject to change.

Contact Arrangements, Series 3

Shell Size 22

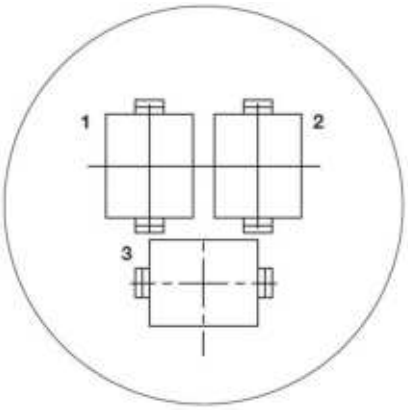

Arrangement 22-3

Arrangement 22-3
Max. Wire Ins. Dia. = .220 [5.59]

Shell Size 28

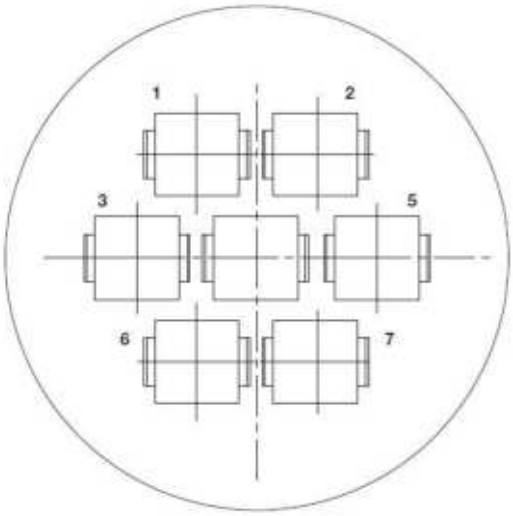

Arrangement 28-7
Max. Wire Ins. Dia. = .220 [5.59]

Note: Contact arrangements shown are of pin mating face (plug or receptacle). Socket mating face is mirror image.

Note: All part numbers are RoHS Compliant.

Receptacles and Plugs, Series 4

Square Flange Receptacle

Plug

Listed part numbers are for connectors only; **contacts must be ordered separately.**

Arrangement		Square Flange Receptacle		Plug Part No.		
				without TETRASEALS Ring		with TETRASEALS Ring
Shell Size	No. of Pos.	Standard Sex	Reverse Sex	Standard Sex	Reverse Sex	Standard Sex
28-16M		208479-1	1776088-1	208478-1	1776089-1	—
28-22M		208481-1	—	208480-1	—	208480-3

Material and Finish

SQUARE FLANGE RECEPTACLE

Housing – Thermoplastic, UL 94V-0 rated, black
Metal-Shell – Zinc alloy, plated nickel
Grooved Pin – Stainless steel

PLUG

Housing – Thermoplastic, UL 94V-0 rated, black
Metal-Shell – Zinc alloy, plated nickel
Tetraseal Seal – Fluorocarbon
Retainer Rings – Stainless Steel
Coupling Ring – Zinc alloy, plated nickel

Related Product Data

Contacts – Pages 19-23 and 34-35
Contact Arrangement – Page 78
Component Dimensions – Page 79
Accessories – Pages 39-43 and 80
Performance Characteristics – Page 6
Application Tooling – Pages 81-83
Technical Documents – Page 84

TETRASEALS Ring

(Installed in Plugs only)

The TETRASEALS Ring provides splashproof sealing between connector metalshells. It is located behind the plug-shell external keys (under the coupling ring).
When mated with a receptacle, the ring is compressed against the inside diameter of the mating end edge of the receptacle shell.

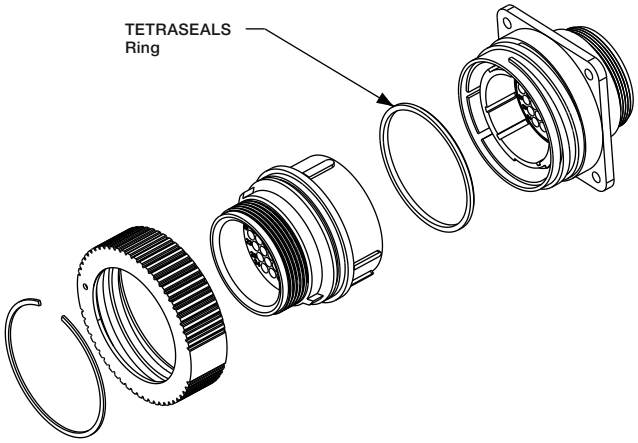

Dimensions are in inches and millimeters unless otherwise specified. Values in brackets are metric equivalents.
Dimensions are shown for reference purposes only. Specifications subject to change.

Contact Arrangements, Series 4

Shell Size 28

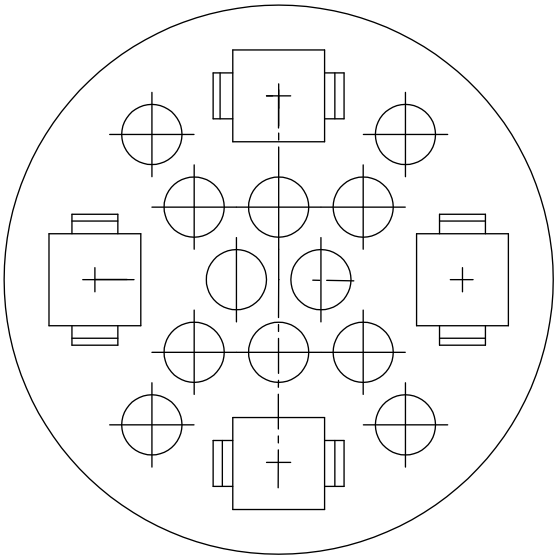

Arrangement 28-16M
Max. Wire Ins. Dia. = .150 [3.81] for Multimate Contacts,
.220 [5.59] for Power Contacts

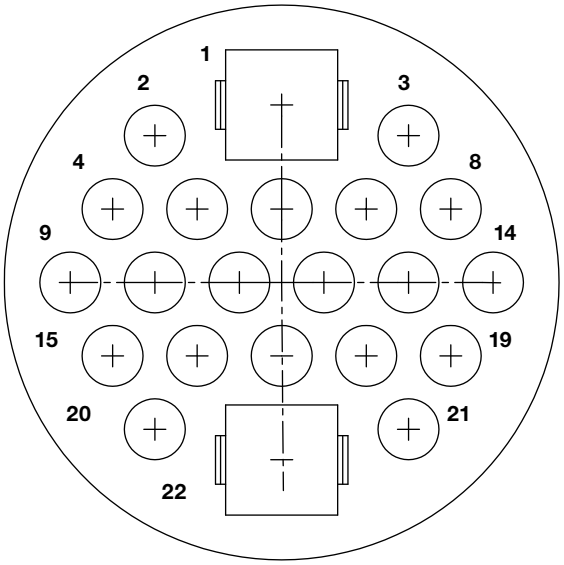

Arrangement 28-22M
Max. Wire Ins. Dia. = .150 [3.81] for Multimate Contacts,
.220 [5.59] for Power Contacts

Note: Contact arrangements shown are of pin mating face (plug or receptacle). Socket mating face is mirror image.

Note: All part numbers are RoHS Compliant.

Component Dimensions, Series 1, 2, 3 and 4

Square Flange Receptacles

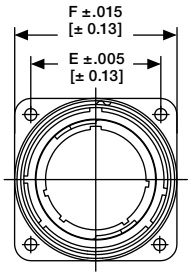

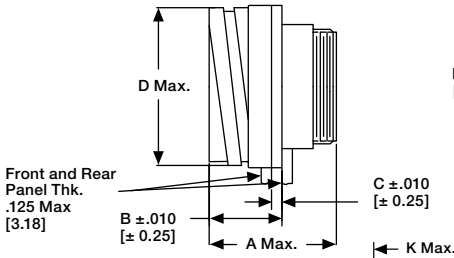

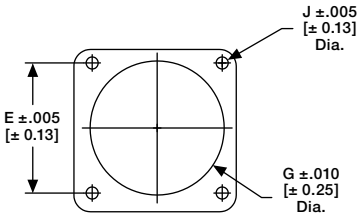

Panel Cutout, Front Mounted Receptacle

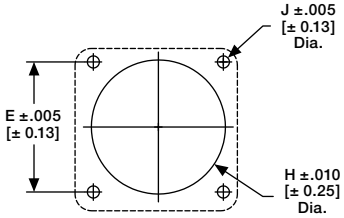

Panel Cutout, Rear Mounted Receptacle

Plugs

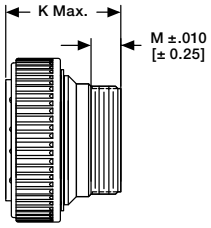

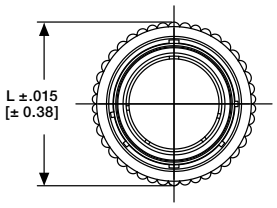

For **drawings, technical data or samples**, contact your sales engineer or call Technical Support.

Series	Arrangement		Sex	Dimensions											
	Shell Size	No. of Pos.		A	B	C	D	E	F	G	H	J	K	L	M
1	14-5		Std. Rev.	1.415 [35.94]	.745 [18.92]	.100 [2.54]	1.031 [26.19]	.906 [23.01]	1.185 [30.1]	1.070 [27.18]	1.070 [27.18]	.125 [3.18]	1.400 [35.56]	1.225 [31.12]	.380 [9.65]
	14-7		Std. Rev.	1.415 [35.94]	.745 [18.92]	.100 [2.54]	1.031 [26.19]	.906 [23.01]	1.185 [30.1]	1.070 [27.18]	1.070 [27.18]	.125 [3.18]	1.400 [35.56]	1.225 [31.12]	.380 [9.65]
	22-14		Rev.	1.190 [30.22]	.790 [20.07]	.103 [2.62]	1.503 [38.18]	1.250 [31.75]	1.534 [38.96]	1.156 [29.36]	1.554 [39.47]	.120 [3.05]	1.560 [39.62]	1.750 [44.45]	.380 [9.65]
	22-16		Std.	1.470 [37.34]	.790 [20.07]	.103 [2.62]	1.503 [38.18]	1.250 [31.75]	1.534 [38.96]	1.156 [29.36]	1.554 [39.47]	.120 [3.05]	1.265 [32.13]	1.750 [44.45]	.380 [9.65]
	28-24		Std.	1.555 [39.5]	.875 [22.23]	.125 [3.18]	1.900 [48.26]	1.562 [39.67]	1.950 [49.53]	1.610 [40.89]	1.970 [50.04]	.145 [3.68]	1.560 [39.62]	2.170 [55.12]	.380 [9.65]
	28-37		Std.	1.540 [39.12]	.875 [22.23]	.125 [3.18]	1.900 [48.26]	1.562 [39.67]	1.950 [49.53]	1.610 [40.89]	1.970 [50.04]	.145 [3.68]	1.560 [39.62]	2.170 [55.12]	.380 [9.65]
			Rev.	1.260 [31.00]	.875 [22.23]	.125 [3.18]	1.900 [48.26]	1.562 [39.67]	1.950 [49.53]	1.610 [40.89]	1.970 [50.04]	.145 [3.68]	1.840 [46.74]	2.170 [55.12]	.380 [9.65]
2	22-28		Std. Rev.	.934 [23.72]	.790 [20.07]	.103 [2.62]	1.503 [38.18]	1.250 [31.75]	1.534 [38.96]	1.156 [29.36]	1.554 [39.47]	.120 [3.05]	1.295 [32.89]	1.750 [44.45]	.380 [9.65]
	28-57		Rev.	1.229 [31.22]	.875 [22.22]	.125 [3.18]	1.900 [48.26]	1.562 [39.67]	1.950 [49.53]	1.610 [40.89]	1.970 [50.04]	.145 [3.68]	1.408 [35.76]	2.170 [55.12]	.380 [9.65]
	28-63		Std.	1.229 [31.22]	.875 [22.22]	.125 [3.18]	1.900 [48.26]	1.562 [39.67]	1.950 [49.53]	1.610 [40.89]	1.970 [50.04]	.145 [3.68]	1.408 [35.76]	2.170 [55.12]	.380 [9.65]
3	22-3		Std. Rev.	1.755 [44.58]	.790 [20.07]	.103 [2.62]	1.503 [38.18]	1.250 [31.75]	1.534 [38.96]	1.156 [29.36]	1.554 [39.47]	.120 [3.05]	1.805 [45.85]	1.750 [44.45]	.380 [9.65]
	28-7		Std. Rev.	1.825 [46.36]	.875 [22.22]	.125 [3.18]	1.900 [48.26]	1.562 [39.67]	1.950 [49.53]	1.610 [40.89]	1.970 [50.04]	.145 [3.68]	2.125 [53.98]	2.170 [55.12]	.380 [9.65]
4	28-13M		Std.	1.825 [46.36]	.875 [22.22]	.125 [3.18]	1.900 [48.26]	1.562 [39.67]	1.950 [49.53]	1.610 [40.89]	1.970 [50.04]	.145 [3.68]	2.125 [53.98]	2.170 [55.12]	.380 [9.65]
	28-16M		Std.	1.825 [46.36]	.875 [22.22]	.125 [3.18]	1.900 [48.26]	1.562 [39.67]	1.950 [49.53]	1.610 [40.89]	1.970 [50.04]	.145 [3.68]	2.125 [53.98]	2.170 [55.12]	.380 [9.65]
	28-22M		Std.	1.825 [46.36]	.875 [22.22]	.125 [3.18]	1.900 [48.26]	1.562 [39.67]	1.950 [49.53]	1.610 [40.89]	1.970 [50.04]	.145 [3.68]	2.125 [53.98]	2.170 [55.12]	.380 [9.65]

Dimensions are in inches and millimeters unless otherwise specified. Values in brackets are metric equivalents.
Dimensions are shown for reference purposes only. Specifications subject to change.

Cable Clamps

Shell Size	Cable O.D. Range	Thread Size	Part No.
14	.225-.562 [5.71-14.27]	7/8-20 UNEF-3B	208945-5
22	.325-.750 [8.26-19.05]	1-3/16-18 UNEF-3B	208945-7
28	.450-.938 [11.43-23.83]	1-7/16-18 UNEF-3B	208945-8

Notes:
1. For Shell Size 22 Receptacle use plastic cable clamp Size 17 (See page 38), for Shell Size 28 Receptacle use plastic cable clamp Size 23 (See pages 38-39). Use Size 14 metal cable clamp for both plug and receptacle Size 14 connectors.
2. Metal cable clamps (Sizes 22 and 28) are for use with Metal-Shell CPC plugs ONLY.

Material and Finish
Body and Clamp Halves –
Zinc alloy, nickel plated
Screws and Washers –
Stainless steel

Cable Entry Seals

Heat Shrinkable Sealing Boots

Cable entry seals are used with jacketed cable to provide an environmentally sealed wire-to-connector system. They can be used with plugs.

Shell Size	Expanded Wall Thickness	Sealing Range (Dia.)	Max. Recovered Inside Dia.	Part No.
28	.070 [1.78]	.550-1.250 [13.97-31.75]	.500 [12.70]	54012-4

Thick Wall Boots

Material
Internal Sleeve – Nylon
Outer Tubing – Polyolefin, black

Protective Cap Assemblies

(for Metal-Shell CPC Receptacles Only)

Shell Size	Part No.
14	213823-2
22	211903-1
28	211904-1

Material and Finish
Zinc alloy, nickel plated

Note: All part numbers are RoHS Compliant.

Manual Hand Tools for Interchangeable Die Sets

These tools are recommended for small production, prototype and experimental applications. They are used for terminating pin and socket contacts to wire and feature a ratchet device to provide consistently formed crimps.

SDE (Standard Die Envelope) Die Sets

Standard Die Envelope (SDE) die sets are a commercial grade option that provide cost-effective flexibility and compatibility with a number of different manual hand tool frames including the PRO CRIMPER III, the SDE Micro Crimp Battery Hand Tool, the SDE bench top Terminator and the 626 Pneumatic Tool System.

For more information, request Catalog **1-1773865-2.**

PRO-CRIMPER III Hand Tool, Part No. 58495-1

Commercial grade hand tool for crimping various products feature a ratchet control system to ensure a complete crimp cycle. Commercial tools accept both pinned- and shouldered style die sets. Locators are provided with pinned-style die sets for proper contact and wire positioning, and to help minimize contact rotation and bending during crimping. Approximate weight 1.3 lb [0.60 kg].

For use with Type III+ contacts, see pages 17-19.

For more information, request Catalog **1-1773865-2**, Instruction Sheet **408-9819**.

112076

CERTI-CRIMP Straight Action Hand Tools (SAHT)

The CERTI-CRIMP II family of premium hand tools is one of the primary options for wire sizes as large as 14 AWG. When paired with the appropriate contacts the CERTI-CRIMP II tools meet appropriate 114 application specification feature requirements, include adjustable insulation crimp capability, include the CERTI-CRIMP ratchet control system, and helps ensure a complete crimp cycle. In many cases include wire stops, locators, and straightening features.

For Type III+ contacts, see pages 17-19.

For more information, request Catalog **1-1773864-7**, Instruction Sheet **408-2095**.

92936-8

CERTI-CRIMP "C" Head Straight Action Hand Tool (SAHT), Part No. 69710-1

The CERTI-CRIMP "C" Head Straight Action Hand Tool (**PN 69710-1**) is used for larger contacts and wire sizes, also meeting applicable 114 specification feature requirements. Both CERTI-CRIMP II heads and "C" head dies can be used with multiple powered options.

See Catalog **65780** for additional details.

Electric Machine for Interchangeable Die Sets

112383

SDE Terminator, Part No. 1490076-2

An electric crimp terminator with compact design features a die set holder that is compatible with SDE die sets. Hand- or foot actuated options are available. CE Approved.

For more information, request Catalog **1654714**.

Dimensions are in inches and millimeters unless otherwise specified. Values in brackets are metric equivalents.
Dimensions are shown for reference purposes only. Specifications subject to change.

Pneumatic Hand Tool for Interchangeable Die Sets

626 Pneumatic Tool System

Lightweight, air-operated modular tooling system. Accepts a wide variety of interchangeable heads for crimping various types of contacts, terminals and splices onto wires ranging from 6-26 AWG [13-0.12 mm2], plus coaxial and fiber optic cable. Optional ratchet control available to provide complete crimp cycle.

For subminiature coaxial contacts, see pages 22-23.

For more information, request Catalog **124208**.

Crimp Machines

AMP-O-LECTRIC Model "GII" Terminating Machines, Part Nos. 2217000-1, -9, -11

Semiautomatic bench machines for crimping reeled terminals and contacts, featuring a quiet and reliable direct motor drive, microprocessor controls for ease of setup and operation, and guarding and lighting designed for operator convenience and safety.

All models are equipped with either manual or automatic precision adjustment of crimp height. Machine mounted sensors are available for crimp quality monitoring using conventional miniature-style applicators.

For more information, request Catalog **1-1773736-1**, Catalog **82275** [Crimp Quality Monitor (CQM II)].

Crimp Quality Monitor II (CQM II)

This system provides 100% on-the-fly crimp inspection. It measures the crimp height of each termination, and evaluates the quality of each crimp. If a crimp is questionable, the monitor alerts the operator with both visual and audible alarms. It also provides ports for printing and networking. When used with AMP-O-LECTRIC Model "GII" Termination Machines, the monitor is mounted to the machine. When used with TE Connectivity Lead Making Machines, it is integrated into the machine's operating system.

For more information, request Catalog **82275**.

Call Technical Support for Automatic Machine Applicator Part Numbers.

AMP 3K and AMP 5K Terminating Machines

- 3,000 lb [1361 kg] max. crimp force (AMP 3K); 5,000 lb [2268 kg] max. crimp force (AMP 5K)
- Tool-less removal of applicators and guards
- Jog capability
- Quiet, fast operation – 80/76 dBA and cycle time less than 0.400 seconds
- Accepts Heavy Duty Mini style applicators
- Wide range of optional equipment such as tool-less precision crimp height adjust, batch counter, CQM II capability and work light

The AMP 3K and AMP 5K Terminators are designed for customers that require the increased output and quality of a semiautomatic machine at a competitive price. By incorporating the most commonly requested features as standard and offering a long list of optional equipment, these terminators offer flexibility to meet the specific needs of various applications at the low cost.

For more information, request Catalog **1654856**.

Note: All part numbers are RoHS Compliant.

Applicators

OCEAN Applicator

Standardized applicator offerings provide global design consistency and offer flexibility with choices in feeding options. The OCEAN applicator is designed so that all feed options are interchangeable with the common base applicator. Our pneumatic and mechanical feed options have been completely redesigned. They offer finer, more precise terminal positioning along with quicker adjustability while being much more user friendly. The interchangeability also makes it possible to upgrade to smart applicator technology. Request catalog **9-1773458-6** for more information.

Stripper-Crimper Machines

Cosmic 60R Wire Stripping Machine, 2047793-1

With just three analogous controls, you can set diameter, stripping length and partial pull-off length. The display shows the cut diameter in 0.01 mm increments. The processing cycle is easy to trigger: the moment the tip of the conductor touches the release sensor, the stripping process starts automatically.

See catalog **1654956** for more information.

Cosmic 927R Micro-Cable Stripper, 2047789-1

The compact, lightweight, bench top Cosmic 927R was designed and developed to reliably strip various insulation materials and micro-cable. From conductor diameter 36 to 10 AWG, the stripping diameter display can be set to within 0.1mm increments.

See catalog **1654956** for more information.

Lead Makers

UNIQA-PRO

The UNIQA-PRO Single Crimp Wire Processor is a cost-effective solution for companies looking to ramp up production from multiple bench top machines without making the large capital investment of a double ended leadmaker. With this single ended-leadmaker, you will be able to save labor costs by measuring, cutting, stripping both ends, and crimping one end of a wire lead all with a single machine.

For more information, request Catalog **1-1773856-5**.

GAMMA 333 PC-V

The flexible design of the Gamma 333 PC-V accommodates space for multiple processing stations in order to handle a wide variety of customer required applications. And, with its large wire processing range the Gamma 333 PC-V can accommodate cross sections up to 10 AWG with wire lengths up to 213 ft.

See catalog **1-1773861-1** for more information.

Dimensions are in inches and millimeters unless otherwise specified. Values in brackets are metric equivalents.
Dimensions are shown for reference purposes only. Specifications subject to change.

Technical Documents

Various technical documents are available for your use:

Product Specifications describe technical performance characteristics and verification tests. They are intended for the Design, Component and Quality Engineer.

108-1579 Sealed CPC Connectors with Removable Contacts
108-2079 Miniature CPC Connectors
108-10024 CPC Connectors
108-10024-2 (Series 1)
108-10024-3 (Series 2)
108-10024-4 (Series 3 & 4)
108-10037 Contacts, Type XII
108-10040 Metal-Shell CPC Connectors
108-10042 Contacts, Type III +
108-40005 Contacts, Size 20 DF

Application Specifications describe requirements for using the product in its intended application and/or crimping information. They are intended for the Packaging and Design Engineer and the Machine Setup Person.

114-10000 Contacts, Size 20 DF
114-10004 Contacts, Type III +
114-10005 Contacts, Type XII
114-10038 CPC Connectors

Instruction Sheets provide instructions for assembling or applying the product. They are intended for the Manufacturing Assembler or Operator.

408-4317 Two-Piece Sealed CPC Connectors
408-6641 Metal-Shell CPC Connectors
408-7582 Accessories for CPC Connectors
408-7593 CPC Connectors
408-7901 Application and Maintenance for AMP Hand Crimp Tool
408-8416 CPC Right-Angle Cable Clamp Assembly

Application Tooling/Instruction Sheet Cross Reference

Tool Part No.	Instruction Sheet
58448-2	408-9357
58495-1	408-9819
58541-1	408-4051
69710-1	408-2095
90136-1	408-7267
90140-1	408-7175
90145-1	408-7175
90145-2	408-7175
91002-1	408-7347
91019-3	408-7276
91067-2	408-7508
91285-1	408-9404
91503-1	408-8547
91505-1	408-8547
91515-1	408-8547
91519-1	408-8547
91521-1	408-8547

Tool Part No.	Instruction Sheet
91523-1	408-8547
91525-1	408-8547
91529-1	408-8547
91538-1	408-10274
91539-1	408-8547
91542-1	408-8547
91549-1	408-8547
200893-2	408-1817
305183	408-1216
318813-1	408-4374
356611-1	408-4324
356611-2	408-4324
356612-1	408-4324
2217000-1	409-32035
601967-1	408-7516
1490076-2	409-10052

Note: All part numbers are RoHS Compliant.

Products

Note: This part number index lists all cataloged parts by base number only. Complete part numbers (with prefixes and/or suffixes) are shown on the pages indicated.

Part Number	Page
1-206062-4	39
1-206062-7	39
1-206070-0	39
1-206138-0	39
1-206322-0	39
1-206455-1	27
1-206455-2	27
1-206852-1	27
1-206852-2	27
1-206934-1	14
1-206934-7	14
1-206934-8	14
1-207216-6	27
1-207216-7	27
1-207303-3	14
1-207303-4	14
1-207303-5	14
1-207369-1	27
1-207369-3	27
1-208223-0	14
1-208657-0	27
1-208657-1	27
1-213825-7	15
1-213826-1	15
1-5066683-0	29
1-66098-8	19
1-66099-5	19
1-66100-9	19
1-66101-9	19
1-66103-8	19
1-66105-9	19
1-66106-5	19
1-66107-1	19
1-66108-5	19
1-66109-7	19
1-66331-4	19
1-66332-4	19
1-66358-0	19
1-66358-6	19
1-66358-9	20
1-66359-0	19
1-66359-4	19
1-66359-6	20
1-66359-9	20
1-66360-2	19
1-66360-4	20
1-66360-6	20
1-66361-2	19
1-66361-4	20
1-66361-6	20
1-66399-0	19
1-66400-0	19
1-66424-1	19
1-66425-2	19
1-66504-0	29
1-66505-0	29
1-66506-0	29
1-66507-0	29
1-66563-1	19
1-66564-2	19
1-66597-0	20
1-66597-1	20
1-66598-1	20
1-66598-2	20
1-66601-0	20
1-66601-2	20
1-66602-0	20
1-66740-1	34
1-66740-2	34
1-66741-1	34
1-66741-2	34
1-770834-0	66
1-770834-1	66
1-770835-0	66
1-770901-0	66
1-770902-0	66
1-770902-1	66
1-770985-0	66
1-770986-0	66
1-788130-1	15
1-794058-0	66
1-794059-0	66
1-796329-1	27
1-796375-1	17
1-796375-2	17
1-796387-1	17
1-796387-2	17
1-796403-1	17
1-796403-2	17
1-796404-1	17
1-796406-1	17
1-796407-1	17
1-796409-1	17
1-796433-1	14
1-796435-2	17
1-796500-1	17
1-796502-1	17
1445389-1	64
1445389-3	64
1445390-1	64
1445390-3	64
1445420-1	66
1445420-2	66
1445421-1	64
1445421-3	64
1445510-1	64
1445510-3	64
1445522-3	64
1445526-1	64
1445526-3	64
1445534-1	64
1445534-3	64
1445535-1	64
1445535-3	64
1445536-1	64
1445536-3	64
1445537-1	64
1445537-3	64
1445538-1	64
1445538-3	64
1445539-1	64
1445539-3	64
1445730-1	66
1445771-1	66
1445807-1	65
1445807-3	65
1445816-1	65
1445816-3	65
1445817-1	65
1445817-3	65
1445818-1	65
1445818-3	65
1445819-1	65
1445819-3	65
1445820-1	65
1445820-3	65
1445821-1	65
1445821-3	65
1445822-1	65
1445822-3	65
1445823-1	65
1445823-3	65
1445824-1	65
1445824-3	65
1445825-1	65
1445825-3	65
1445826-1	65
1445826-3	65
1445827-1	65
1445827-3	65
1445828-1	65
1445828-3	65
1445829-1	65
1445829-3	65
1445856-1	66
1445904-1	66
1546347-2	40
1546348-2	40
1546349-2	40
1546350-2	40
1546746-3	66
1546746-4	66
1546997-1	66
1604089-1	66
1604089-2	66
1604196-1	66
1604816-1	64,65,66
164159-3	21
164159-4	21
164160-4	21
164161-3	21
164161-4	21
164162-1	21
164163-1	21
164163-2	21
164164-1	21
164164-2	21
1658537-1	29
1658537-2	29
1658537-3	29
1658537-4	29
1658538-1	29
1658538-2	29
1658538-3	29
1658539-1	29
1658539-2	29
1658539-3	29
1658539-4	29
1658540-1	29
1658540-2	29
1658540-4	29
1658540-5	29
1658543-1	29
1658543-2	29
1658543-3	29
1658544-1	29
1658544-2	29
1658544-3	29
1776088-1	77
1776089-1	77
1776903-1	18
1776904-1	18
1776905-1	18
1776906-1	18
193844-1	21
193844-2	21
193846-1	21
193846-2	21
193990-2	35
193991-4	35
1977876-1	50
1977880-1	50
1977882-1	50
1977883-1	50
1977884-1	50
1977885-1	50
1977886-1	50
1977887-1	50
1977888-1	51
1977890-1	51
1977891-1	51
1977892-1	51
197889-1	51
2-208224-1	15
2-66102-5	19
2-66358-1	20
200333-1	23
200333-8	23
200336-1	23
200336-6	23
200821-1	43
201328-1	23
201328-9	23
201330-1	23
201334-1	23
201568-1	23
201570-1	23
201578-1	23
201578-4	23
201580-1	23
201611-1	23
201613-1	23
202236-5	22
202236-7	22
202237-5	22
202237-7	22
202507-1	23
202508-1	23
202725-1	23
202726-1	23
204219-1	23
205089-1	30
205089-2	30
205090-1	30
205090-2	30
205838-1	26,28
205840-3	26
205840-4	26
205841-3	26
205843-2	26
206036-2	33,35
206036-4	56
206036-5	56
206036-8	12
206037-1	12,16,17,18,56
206037-2	33,35
206038-1	26
206038-2	26
206038-4	26
206039-1	26
206043-1	12
206043-3	12
206043-4	56
206043-5	56
206044-1	12,17,56
206060-1	12,16,17,56
206061-1	12
206061-2	56
206070-8	39,54,55,61
206125-1	28
206126-1	28
206127-1	28
206136-1	33
206137-1	33
206137-2	33
206137-5	33
206138-8	39
206150-1	12,17,18,56
206151-1	12
206151-2	12
206151-3	56
206151-4	56
206152-1	26

Dimensions are in inches and millimeters unless otherwise specified. Values in brackets are metric equivalents.
Dimensions are shown for reference purposes only. Specifications subject to change.

Circular Plastic Connectors

Part Number	Page
206153-1	12
206153-2	56
206207-1	33
206226-1	33
206227-1	33
206227-6	33
206304-1	59
206305-1	12,17,56
206306-1	12
206306-2	12
206306-3	56
206306-4	56
206306-5	12
206322-9	39,54,55,61
206358-5	39
206358-6	39
206403-1	56
206403-2	56
206403-3	56
206403-4	56
206403-5	56
206425-1	33
206425-2	33
206425-5	33
206426-1	33
206429-1	12,17,56
206430-1	12
206430-2	12
206430-3	56
206433-1	26
206433-2	26
206433-3	26
206434-1	26
206437-1	26
206438-1	26
206438-2	26
206485-1	26
206486-1	26
206486-2	26
206508-1	43
206509-1	43
206512-5	39
206512-6	39
206516-1	16
206518-2	16
206552-1	16
206554-1	16
206613-1	37
206705-1	12
206705-2	12
206705-3	56
206705-4	56
206708-1	12,17,56
206837-1	12,17,18,56
206837-1	12,17,18,56
206838-1	12
206838-1	12
206838-2	12
206838-2	12
206838-3	56
206838-4	56
206852-8	26
206903-2	58
206934-5	14
206966-7	39
206966-9	39
207008-6	39
207052-1	59
207052-2	59
207052-3	59
207055-1	41
207241-1	42
207299-1	41
207299-2	41
207299-3	41
207299-4	41
207387-1	42
207387-2	42
207445-3	58
207446-3	58
207446-4	58
207485-1	37
207486-1	37
207486-2	37
207489-1	42
207490-1	42
207597-1	43
207774-3	40
207774-4	40
207825-9	14
207890-2	15
208130-1	12
208131-1	12
208223-9	14
208283-4	15
208337-1	46,50
208338-1	46,50
208457-1	68
208457-3	68
208459-1	68
208470-1	68
208470-3	68
208471-1	68
208472-1	69
208473-1	69
208474-1	72
208475-1	72
208476-1	71
208477-1	71
208478-1	77
208479-1	77
208480-1	77
208480-3	77
208481-1	77
208482-1	74
208483-1	74
208484-1	75
208484-3	75
208485-1	75
208486-1	69
208486-3	69
208487-1	69
208488-1	68
208488-3	68
208489-1	68
208490-1	71
208491-1	71
208492-1	72
208493-1	72
208494-1	74
208494-3	74
208495-1	74
208496-1	75
208497-1	75
208652-1	58
208680-1	58
208680-2	58
208714-1	68
208714-2	68
208715-1	68
208716-1	69
208717-1	69
208718-1	68
208718-2	68
208719-1	68
208720-1	69
208721-1	69
208800-1	58
208945-5	80
208945-7	80
208945-8	80
211102-1	12
211103-1	12
211398-1	13
211398-2	13
211398-4	13
211399-1	13,17,18,56
211400-1	13,17
211401-1	13
211401-3	56
211401-4	13
211766-1	13
211767-1	13
211767-2	13
211768-1	13
211769-1	13
211769-3	13
211770-2	13
211771-1	13
211771-2	13
211772-1	13,17
211773-1	13
211824-1	37
211825-1	37
211825-2	37
211839-1	12
211839-1	12
211870-2	58
211904-1	80
212618-1	23
212618-2	23
213485-1	58
213570-1	61
213571-2	61
213581-1	33
213588-2	14
213603-4	62
213603-5	62
213603-6	62
213605-7	62
213650-1	61
213651-1	61
213652-1	61
213667-1	61
213668-1	61
213671-1	61
213729-6	15
213729-9	15
213780-2	14
213782-4	14
213798-3	14
213810-1	12,13 26,33,54,55
213811-1	12,26
213812-1	12,13 26,33,37
213813-1	12,13
213823-2	80
213827-8	15
213841-1	45
213841-2	45
213841-3	45
213841-4	45
213841-5	45
213841-8	45
213843-1	45
213843-2	45
213843-3	45
213843-4	45
213845-1	45
213845-2	45
213845-3	45
213845-4	45
213845-5	45
213845-6	45
213847-1	45
213847-2	45
213847-3	45
213847-4	45
213848-1	12
213849-1	12
213849-1	12
213850-1	12
213851-1	12
213852-1	13
213853-1	13
213854-3	14
213855-3	14
213855-4	14
213856-4	15
213859-2	14
213860-1	12
213862-1	12
213862-1	12
213864-1	12
213866-1	12
213868-1	13
213870-1	13
213889-2	51
213890-2	51
213893-2	55
213894-2	55
213899-1	54,57
213900-1	55,57
213902-3	54,55
213904-3	54,55
213905-1	51
213906-1	55
213919-1	57
213919-2	57
213920-1	57
213920-2	57
213925-1	57
213926-1	57
213933-1	58
213982-1	40
2267081-1	51
3-66104-0	19
5019024-1	39
5019024-2	39
5019024-3	39
5019024-4	39
5019024-5	39
5066682-6	29
5066682-9	29
5066683-7	29
54010-1	58
54010-4	58
54011-1	58
54011-3	58
54012-3	80
54012-4	80
54123-1	58
66098-8	19
66098-9	19
66099-3	19
66099-4	19
66100-8	19
66100-9	19
66101-3	19
66101-4	19
66102-8	19
66102-9	19
66103-3	19
66103-4	19
66104-8	19
66104-9	19
66105-3	19
66105-4	19
66106-7	19
66106-8	19
66107-3	19
66107-4	19
66108-7	19
66108-8	19
66109-3	19
66109-4	19
66180-1	22
66181-1	22
66182-1	22
66183-1	22
66253-1	34
66253-2	34
66253-4	34
66253-5	34
66253-6	34
66253-8	34
66254-1	34
66254-2	34
66254-4	34
66255-1	34
66255-2	34
66255-5	34
66255-6	34
66255-7	34
66255-8	34
66256-1	34

Note: All part numbers are RoHS Compliant.

Part Number	Page
66256-2	34
66256-4	34
66256-5	34
66256-6	34
66256-7	34
66259-1	34
66259-2	34
66259-4	34
66260-1	34
66260-2	34
66260-4	34
66261-1	34
66261-2	34
66261-4	34
66262-1	34
66262-2	34
66262-4	34
66331-7	19
66331-8	19
66332-7	19
66332-8	19
66358-9	19
66359-9	19
66360-3	19
66360-4	19
66361-3	19
66361-4	19
66393-7	19
66393-8	19
66394-7	19
66394-8	19
66399-3	19
66399-4	19
66400-3	19
66400-4	19

Part Number	Page
66405-4	19
66406-4	19
66424-7	19
66424-8	19
66425-7	19
66425-8	19
66428-3	19
66428-4	19
66429-3	19
66429-4	19
66504-3	29
66504-4	29
66504-9	29
66505-3	29
66505-4	29
66505-9	29
66506-3	29
66506-4	29
66506-9	29
66507-3	29
66507-4	29
66507-9	29
66563-8	19,62
66564-8	19
66565-4	19,62
66565-7	19,62
66566-4	19
66566-7	19
66569-2	30
66569-3	30
66570-2	30
66570-3	30
66597-2	19
66597-8	19
66598-2	19, 62

Part Number	Page
66598-9	19, 62
66601-2	19, 62
66601-9	19, 62
66602-2	19
66602-8	19
66602-9	20
66682-2	29
66682-4	29
66683-2	29
66683-4	29
66740-1	34
66740-2	34
66740-5	34
66740-6	34
66740-7	34
66740-8	34
66740-9	34
66741-1	34
66741-2	34
66741-5	34
66741-6	34
66741-7	34
66741-8	34
66741-9	34
745253-2	29
745253-3	29
745253-6	29
745253-7	29
745254-2	29
745254-3	29
745254-6	29
745254-7	29
770834-1	66
770834-4	66
770835-1	66

Part Number	Page
770901-1	66
770902-1	66
770902-4	66
770985-1	66
770986-1	66
787610-1	12
788085-1	19
788085-3	19
788088-1	19
788088-2	19
788153-2	46
788154-2	46
788155-2	46
788157-2	46
788158-2	46
788159-2	46
788188-1	47
788188-2	47
788189-1	47
788189-2	47
794058-1	66
794059-1	66
796075-1	46,50
796094-2	46
796095-2	46
796096-2	46
796112-1	47
796188-1	46
796190-1	46
796203-1	47
796207-1	47
796271-1	46
796272-1	46
796273-1	46
796274-1	46

Part Number	Page
796274-2	46
796275-1	46
796275-2	46
796276-1	46
796276-2	46
796286-1	46
796287-1	46
796288-1	46
796291-1	46
796330-1	47
796348-2	17
796379-2	40
796380-2	40
796381-2	40
796382-2	40
796437-2	12
796439-2	13
796449-1	12
796450-1	13
796466-1	47
796964-1	21
796966-1	21
796966-2	21
81665-2	57
81665-3	57
81665-4	57
81665-5	57

Tooling

Part Number	Page
1-601967-5	21,23
1-601967-6	21,23
1490076-2	81,84
200893-2	19,23,84
2047789-1	83
2047793-1	83
2151016-[ ]	19,21
2151017-1	66
2151023-[ ]	19,21
2151026-[ ]	29
2151101-[ ]	19,20
2151405-[ ]	19,20,62
2151411-[ ]	34
2151426-[ ]	34
2151428-[ ]	29
2151496-[ ]	29
2151641-[ ]	19
2151669-[ ]	19,62,84
2151847-[ ]	19
2217000	45,82,84

Part Number	Page
2217755-1	66
2217755-1	66
2217762-1	19
224155-1	35
2266136-1	66
2266335-[ ]	19
2266380-[ ]	19,21
2266601-[ ]	19
2266674-[ ]	66
305183	19,21,22,23,62,84
318813-1	45,84
356114-1	35
356119-1	35
356611-1	45,84
356611-2	45,84
356612-1	45,84
58448-2	29,84
58495-1	19,21,81,84
58541-1	23,84
601966-1	30

Part Number	Page
601966-5	30
601967-1	21,23,84
69710-1	34,45,81,84
90136-1	23,84
90140-1	34,84
90145-1	34,84
90145-2	34,84
90249-2	23
90250-1	23
91002-1	19,66,84
91019-3	34,84
91285-1	29,84
91503-1	29,84
91505-1	19,21,84
91515-1	19,21
91519-1	19,20,84
91521-1	19,20,62,84
91523-1	19,21,84
91525-1	29,84
91529-1	66,84

Part Number	Page
91538-1	23,84
91539-1	23,84
91542-1	19,62
91549-1	29,84

Dimensions are in inches and millimeters unless otherwise specified. Values in brackets are metric equivalents.
Dimensions are shown for reference purposes only. Specifications subject to change.

Cross Reference

(Non-Compliant to RoHS Compliant Part Numbers)

Non-Compliant Part No.	RoHS Compliant Part No.	Page
19024-1	5019024-1	38
19024-2	5019024-2	38
19024-3	5019024-3	38
19024-4	5019024-4	38
19024-5	5019024-5	38
45098	91539-1	21,22
66098-2	1-66098-9	17
66098-7	1-66098-8	17
66099-2	1-66099-5	17
66100-7	1-66100-9	17
66101-2	1-66101-9	17
66102-7	2-66102-5	17
66103-2	1-66103-8	17
66104-7	3-66104-0	17
2-66104-5	3-66104-0	17
66105-2	1-66105-9	17
66106-6	1-66106-5	17
66107-2	1-66107-1	17
66108-6	1-66108-5	17
66109-2	1-66109-7	17
66331-5	1-66331-4	17
66332-5	1-66332-4	17
66358-6	1-66358-6	17,18
1-66358-2	1-66358-8	17,18
1-66358-4	1-66358-6	17,18
2-66358-0	2-66358-1	17,18
66359-6	1-66359-4	17
1-66359-1	1-66359-5	17,18
1-66359-7	1-66359-9	17,18
66360-2	1-66360-2	17,18
1-66360-5	1-66360-6	17,18
66361-2	1-66361-2	17,18
1-66361-5	1-66361-6	17,18
66399-1	1-66399-0	17
66400-1	1-66400-0	17
66424-6	1-66424-1	17
66425-6	1-66425-2	17
5-66504-6	1658537-1	29
5-66504-7	1658537-2	29
5-66504-9	1658537-3	29
6-66504-0	1658537-4	29
5-66505-7	1658538-3	29
6-66505-0	1658538-2	29
6-66505-2	66505-9	29
2-66506-4	1658539-1	29
2-66506-5	1658539-2	29
5-66506-7	1658539-3	29

Non-Compliant Part No.	RoHS Compliant Part No.	Page
5-66506-9	1658539-4	29
3-66507-0	1658540-4	29
3-66507-1	1658540-1	29
5-66507-7	1658540-5	29
5-66507-9	1658540-2	29
66563-6	1-66563-1	17,57
66564-6	1-66564-2	17
66565-2	66565-7	17,57
66566-2	66566-7	17
66597-1	66597-8	17,18
66598-1	66598-9	17,18,57
66598-7	1-66598-0	17,18,57
	1-66598-4	
66601-1	66601-9	17,18,57
66602-1	66602-8	17,18
66682-6	5066682-6	29
66682-9	5066682-9	29
1-66682-1	66682-4	29
66683-7	5066683-7	29
1-66683-0	1-5066683-0	29
202236-1	202236-7	20
202236-2	202236-5	20
202237-1	202237-7	20
202237-2	202237-5	20
206062-3	1-206062-4	38
206062-4	1-206062-7	38
206070-1	206070-8	38,48,49,56
206070-3	1-206070-0	38,48,49,56
206138-1	206138-8	38
206138-2	1-206138-0	38
206322-1	206322-9	38,48,49,56
206322-2	1-206322-0	38,48,49,56
206358-1	206358-5	38
206358-2	206358-6	38
206455-1	1-206455-1	27
206455-2	1-206455-2	27
206512-1	206512-5	38,53
206512-2	206512-6	38,53
206852-1	1-206852-1	27
206852-2	1-206852-2	27
206934-1	1-206934-1	12
206934-6	1-206934-8	12
206934-9	1-206934-7	12
206966-1	206966-7	38
206966-2	206966-9	38
207008-1	207008-5	38
207008-2	207008-6	38

Non-Compliant Part No.	RoHS Compliant Part No.	Page
207216-2	1-207216-6	27
207216-8	1-207216-7	27
207303-1	1-207303-5	12
207303-3	1-207303-3	12
1-207303-1	1-207303-4	12
207369-1	1-207369-1	27
207369-3	1-207369-3	27
207774-1	207774-3	39
207774-2	207774-4	39
207825-1	207825-9	12
207890-1	207890-2	13
208223-1	208223-9	12
208223-3	1-208223-0	12
208224-1	2-208224-1	13
208224-2	1-208224-2	13
208283-1	208283-4	13
208657-1	1-208657-1	27
208657-5	1-208657-0	27
213588-1	213588-2	12
213603-1	213603-5	57
213603-2	213603-6	57
213605-1	213605-7	57
213729-1	213729-9	13
213729-2	213729-6	13
213729-4	213729-8	13
213780-1	213780-2	12
213782-1	213782-4	12
213798-1	213798-3	12
213825-1	1-213825-7	13
213826-1	1-213826-1	13
213827-1	213827-8	13
213828-1	1-213828-6	13
213854-1	213854-3	12
213855-1	213855-4	12
213855-2	213855-3	12
213856-1	213856-4	13
213859-1	213859-2	12
213902-1	213902-3	48,49
213904-1	213904-3	48,49
225088-1	5-225088-1	22
225088-3	5-225088-3	22
466598-1	466598-2	17
1-745253-1	1658543-3	29
1-745253-3	1658543-1	29
1-745253-4	1658543-2	29
1-745253-6	1658543-1	29
1-745254-1	1658544-3	29

Non-Compliant Part No.	RoHS Compliant Part No.	Page
1-745254-3	1-745254-6	29
1-745254-4	1658544-2	29
1-745254-6	1658544-1	29
770834-3	1-770834-0	75
770834-6	1-770834-1	75
770835-3	1-770835-0	75
770901-3	1-770901-0	75
770902-3	1-770902-0	75
770902-6	1-770902-1	75
770903-3	1-770903-0	75
770904-3	1-770904-0	75
770904-6	1-770904-1	75
770985-3	1-770985-0	75
770986-3	1-770986-0	75
770987-3	1-770987-0	75
770988-3	1-770988-0	75
788130-1	1-788130-1	13
794058-3	1-794058-0	75
794059-3	1-794059-0	75
796329-1	1-796329-1	27
796348-1	796348-2	16
796375-1	1-796375-1	16
796375-2	1-796375-2	16
796379-1	796379-2	39
796380-1	796380-2	39
796381-1	796381-2	39
796382-1	796382-2	39
796387-1	1-796387-1	16
796387-2	1-796387-2	16
796403-1	1-796403-1	16
796403-2	1-796403-2	16
796404-1	1-796404-1	16
796406-1	1-796406-1	16
796407-1	1-796407-1	16
796409-1	1-796409-1	16
796433-1	1-796433-1	12
796435-2	1-796435-2	16
796500-1	1-796500-1	16
796501-1	1-796501-1	16
796502-1	1-796502-1	16
1490076-1	1490076-2	76
1546347-1	1546347-2	39
1546348-1	1546348-2	39
1546349-1	1546349-2	39
1546350-1	1546350-2	39
1546746-1	1546746-3	75
1546746-2	1546746-4	75

Note: All part numbers are RoHS Compliant.

LET'S CONNECT

We make it easy to connect with our experts and are ready to provide all the support you need. Just call your local support number or visit www.te.com/industrial to chat with a Product Information Specialist.

TECHNICAL SUPPORT

te.com/support-center

Australia ..... +86 400-820-6015
Austria ..... +43 1-9056-0
Belgium ..... +31 73-6246999
Brazil ..... +55 11-2103-6000
China ..... +86 400-820-6015
Czech Republic ..... +42 02-7201-1103
Denmark ..... +46 8-5072-5000
Estonia ..... +37 2677-8673
Finland ..... +46 8-5072-5000
France ..... +33 1-34-20-8686
Germany ..... +49 6151-607-1999
Greece ..... +97 1-4-347-0226
Holland ..... +31 73-6246999
Hungary ..... +36 1-2892040
India ..... +86 400-820-6015
Ireland ..... +1 800-882-391
Italy ..... +39 011-4012111
Japan ..... +044-844-8052
Korea ..... +02-3415-4607
Latvia ..... +37 2-6778-673
Lithuania ..... +37 037426900
Luxembourg ..... +31 73-6246999
Netherlands ..... +31 73-6246999
New Zealand ..... +86 400-820-6015
Norway ..... +46 8-5072-5000
Poland ..... +48 22-4576750
Portugal ..... +34 91-6630420
Russia ..... +74 95-790-2200
Slovakia ..... +42 02-720-11102
Slovenia ..... +38 615-602-132
South Africa ..... +97 150-457-0806
Spain ..... +34 932-910-330
Sweden ..... +46 8-5072-5000
Switzerland ..... +41 71-447-0447
Taiwan ..... +86 400-820-6015
Turkey ..... +90 212-282-6053
United Kingdom ..... +44 800-267666
USA 800-522-6752

te.com

© 2020 TE Connectivity Ltd. family of companies All Rights Reserved.

TE Connectivity, TE connectivity (logo) and Every Connection Counts are trademarks. All other logos, products and/or company names referred to herein might be trademarks of their respective owners.

While TE has made every reasonable effort to ensure the accuracy of the information in this brochure, TE does not guarantee that it is error-free, nor does TE make any other representation, warranty or guarantee that the information is accurate, correct, reliable or current. TE reserves the right to make any adjustments to the information contained herein at any time without notice. TE expressly disclaims all implied warranties regarding the information contained herein, including, but not limited to, any implied warranties of merchantability or fitness for a particular purpose. The dimensions in this catalog are for reference purposes only and are subject to change without notice. Specifications are subject to change without notice. Consult TE for the latest dimensions and design specifications.

1-1773902-9 12/2020 AK