ECS-P-122X169-S-UV1-1M12 - Front plate

2230009

https://www.phoenixcontact.com/ae/products/2230009

Please be informed that the data shown in this PDF document is generated from our online catalog. Please find the complete data in the user documentation. Our general terms of use for downloads are valid.



Screw locking one female M12-SPEEDCON faceplate of the ECS Family. IP66/IP67/IP68/IP69 rated when mated with associated enclosure. Color: Black (9005), Width: 163 mm, Height: 30 mm, Depth: 62 mm

Your advantages

- Housing design supports the installation of a range of PCB thicknesses for high application diversity
- Optional accessories for wall and mast mounting
- Proven PCB connection technology
- Integrated tamper protection
- Effective protection of electronics against thermal and mechanical influences
- Suitable for outdoor/indoor applications

Commercial data

Item number	2230009
Packing unit	5 pc
Minimum order quantity	5 pc
Sales key	ACF
Product key	ACFDAB
GTIN	4055626381442
Weight per piece (including packing)	123.74 g
Weight per piece (excluding packing)	123 g
Customs tariff number	84879090
Country of origin	US

Technical data

Notes

Assembly note	Please observe the application note in the download area.
Degree of protection	The specification for IP protection applies to the item combination ECS-B-... in conjunction with an unaltered ECS-P...-B front panel.
Degree of protection	When using front panels with connection technology, the IP protection class of the connection technology determines the protection class of the overall solution.
Recommendation	Further information and detailed dimensions are available in the download area.

Product properties

Product type	Front plate
Housing type	Outdoor housing
Housing series	ECS
Product family	ECS..122X..S..

Dimensions

Dimensional drawing	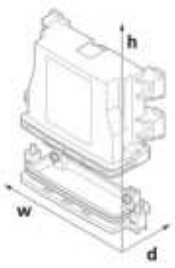
Width	163 mm
Height	30 mm
Depth	62 mm

PCB design

PCB thickness	1.57 mm ... 2.36 mm

Material specifications

Color (Housing)	black (RAL 9005)
Material Housing	PC
Flammability rating according to UL 94	V0
Surface characteristics	untreated

Environmental and real-life conditions

Vibration test

Specification	IEC 60068-2-6:2007-12
Frequency	10 - 2000 - 10 Hz
Sweep speed	1 octave/min

Acceleration	15g (61.6 Hz ... 2000 Hz)
Test duration per axis	2.5 h
Test directions	X-, Y- and Z-axis

Glow-wire test

Specification	IEC 60695-2-11:2014-02
Temperature	850 °C
Time of exposure	30 s

Mechanical strength / tumbling barrel

Specification	IEC 60068-2-31:2008-05
Height of fall	50 cm
Frequency	50

Shocks

Specification	IEC 60068-2-27:2008-02
Pulse shape	Semi-sinusoidal
Acceleration	50g
Shock duration	11 ms
Number of shocks per direction	3
Test directions	X-, Y- and Z-axis (pos. and neg.)

Salt spray test

Specification	DIN EN 60068-2-11:2000-02
Test duration	96 h

Test for substances that would hinder coating with paint or varnish

Specification	VDMA 24364:2018-05
Result	Test passed

Degree of protection (IP code)

Specification	IEC 60529:1989-11 + AMD 1:1999-11 + AMD 2:2013-08
Result, degree of protection, IP code	IP66/IP68 (2 m/24 h)

Ambient conditions

Degree of protection	IP66/IP67
Max. NEMA code to attain	6
Impact strength	IK08
Ambient temperature (operation)	-40 °C ... 100 °C
Ambient temperature (storage/transport)	-40 °C ... 100 °C

PCB data

Number of PCB holders	1
Thickness of the PCB	1.57 mm ... 2.36 mm

Mounting

Mounting type	Screw locking mechanism

Drawings

Dimensional drawing

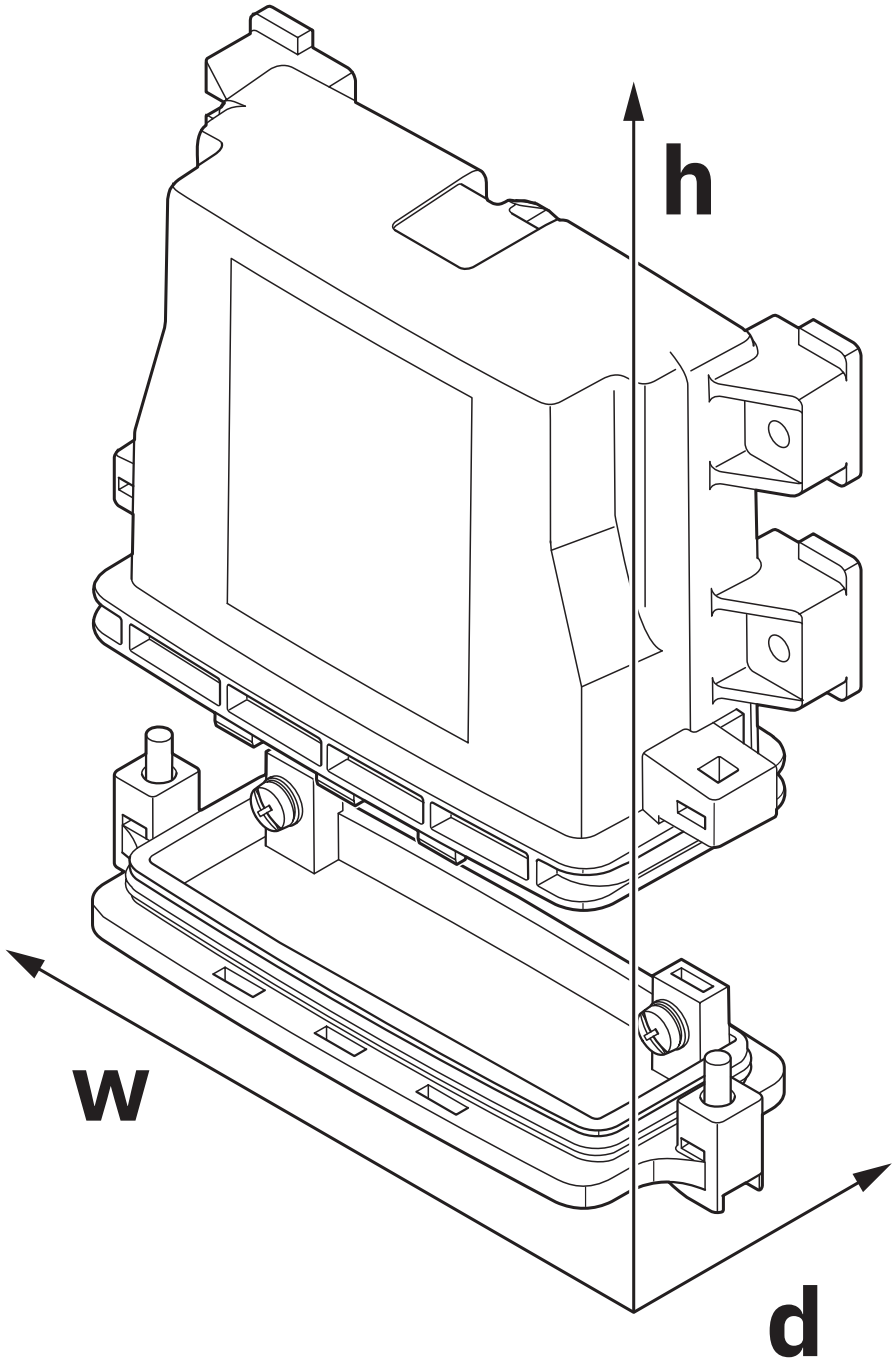

Schematic figure for illustrating the item dimensions. The figure is not of the desired product. For further details, refer to the product drawings in the “Downloads” tab.

Approvals

To download certificates, visit the product detail page: https://www.phoenixcontact.com/ae/products/2230009

DNV
Approval ID: TAE00003W8

Classifications

ECLASS

ECLASS-13.0	27190603
ECLASS-15.0	27190603

ETIM

ETIM 9.0	EC002779

UNSPSC

UNSPSC 21.0	31261500

Environmental product compliance

EU RoHS

Fulfills EU RoHS substance requirements	Yes
Exemption	6(c)

China RoHS

Environment friendly use period (EFUP)	EFUP-50
	An article-related China RoHS declaration table can be found in the download area for the respective article under "Manufacturer declaration". For all articles with EFUP-E, no China RoHS declaration table issued and required.

EU REACH SVHC

REACH candidate substance (CAS No.)	Lead(CAS: 7439-92-1)
SCIP	c7683ed0-3d7d-4ef7-9ccb-a816b34a1c5e

Phoenix Contact 2025 © - all rights reserved
https://www.phoenixcontact.com

PHOENIX CONTACT Middle East FZ LLC
1201N-1206N, Dubai Science Park Towers – North
P.O. Box 345002, Dubai, United Arab Emirates
(+971) 4 437-0324
info-me@phoenixcontact.com