© 2004 TE Connectivity. All Rights Reserved.

REVISIONS 变更					
P	LTR	DESCRIPTION	DATE	DWN	APVD
	B4	ECR-24-221010	30OCT2024	SSM	M.J

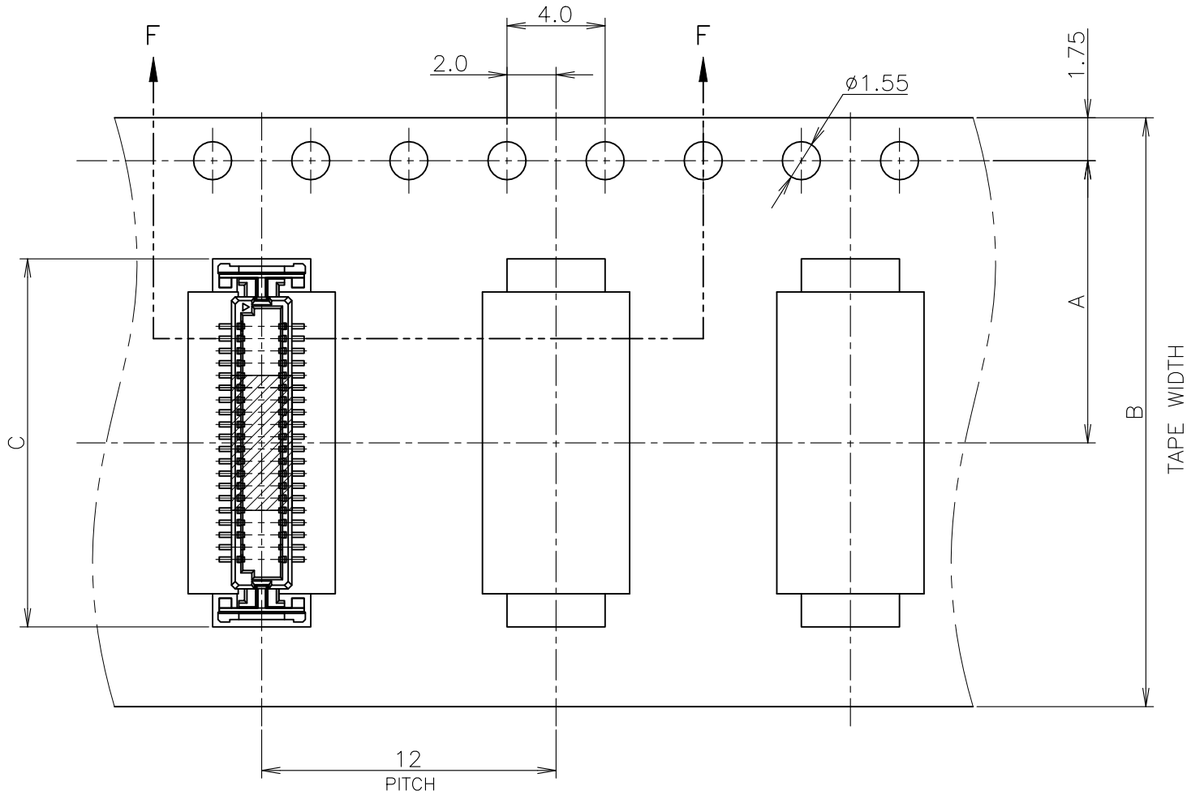

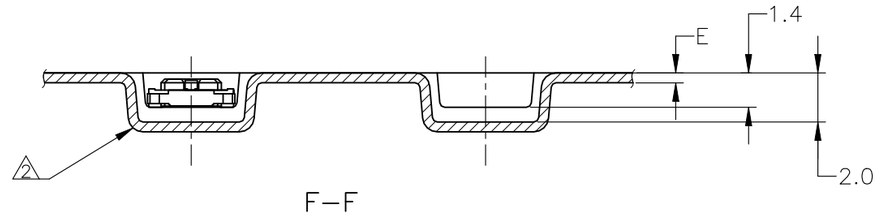

TOP OF REEL

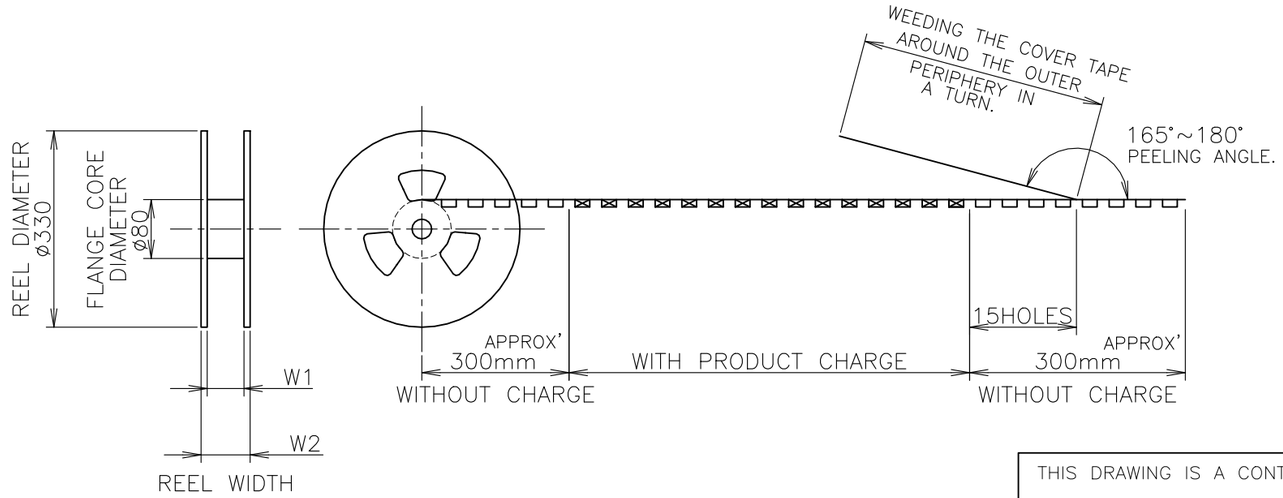

W2	W1	E	C	B	A	QTY/REEL	POS	TAPING P/N
28.4	24.4	0.4	15.0	24	11.5	1500	40	4-5353515-5
28.4	24.4	0.4	15.0	24	11.5	1500	40	4-5353515-0
28.4	24.4	0.4	12.5	24	11.5	1500	30	3-5353515-0
20.4	16.4	0.4	9.75	16	7.5	1500	20	2-5353515-0
DIMENSIONS								

INSTRUCTION SHEET 411-5781

THIS DRAWING IS A CONTROLLED DOCUMENT.

DIMENSIONS: 单位：耗 mm

TOLERANCES UNLESS OTHERWISE SPECIFIED: 一般公差

0 PLC	± 0.2
1 PLC	± 0.2
2 PLC	± 0.2
3 PLC	± 0.2
4 PLC	± 0.2
ANGLES	± 3°

MATERIAL 材料

FINISH 仕上

DWN	BILL LV	09SEP2010
CHK	MARTIN LI	09SEP2010
APVD	STEVEN YAO	09SEP2010
PRODUCT SPEC 製品規格	108-60048	
APPLICATION SPEC 取付適用規格		
WEIGHT		

TE Connectivity Ltd.

NAME 名称: ON TAPING EMBOSS 0.5mm FS CONN.TAB ASSY WITH KEY & MYLAR,WITHOUT BOSS

SIZE	CAGE CODE	DRAWING NO 番号	RESTRICTED TO
A3	00779	C-5353515	—

CUSTOMER DRAWING

SCALE 尺度 4:1 | SHEET 1 OF 2 | REV B4

© 2004 TE Connectivity. All Rights Reserved.

REVISIONS 変更					
P	LTR	DESCRIPTION	DATE	DWN	APVD
	–	SEE SHEET 1	–	–	–

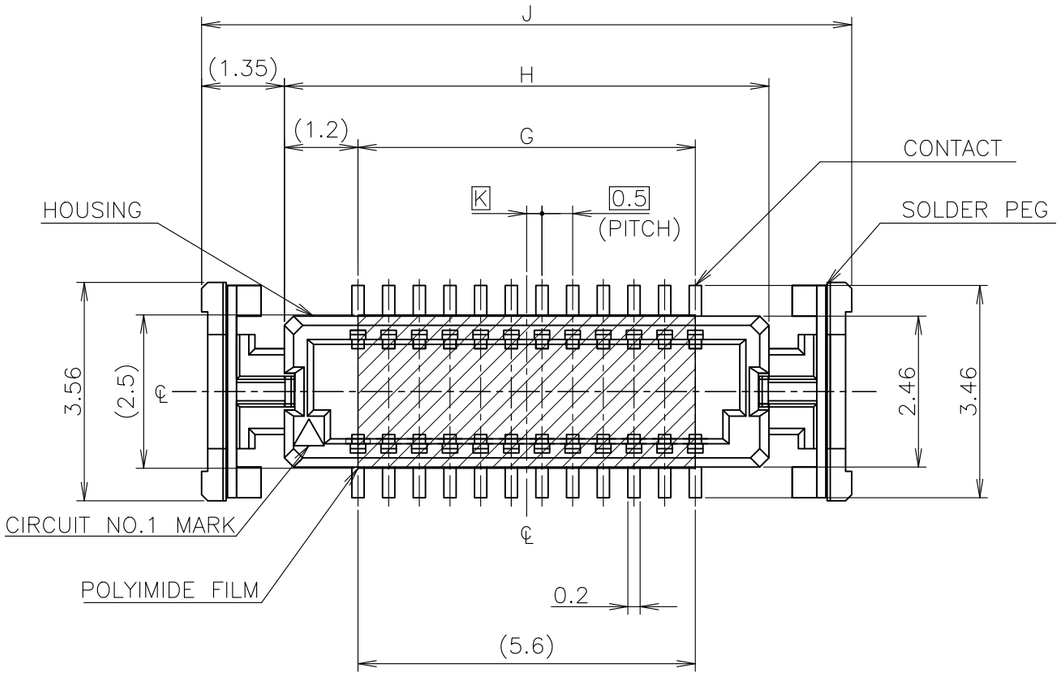

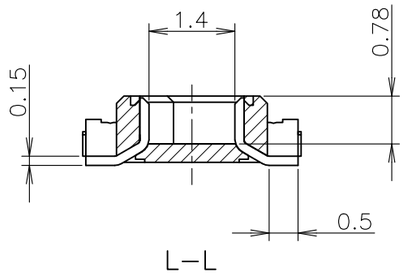

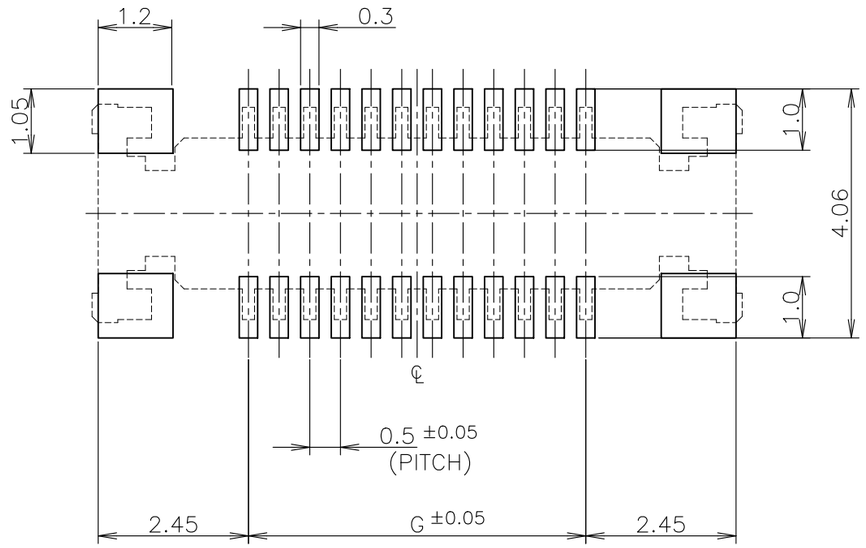

(T=0.6 MIN.)
P.C. BOARD LAYOUT (REF.)

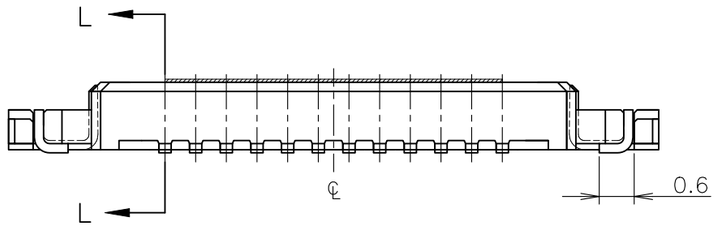

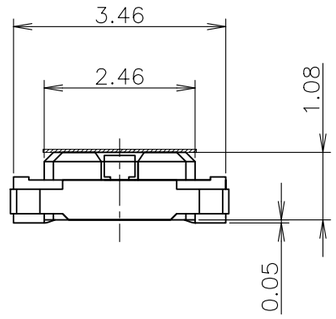

	K	J	H	G	POS.	PART NO.
3	0.25	14.6	11.9	9.5	40	4–5353515–5
	0.25	14.6	11.9	9.5	40	4–5353515–0
	—//—	12.1	9.4	7	30	3–5353515–0
	0.25	9.6	6.9	4.5	20	2–5353515–0
	DIMENSION					

1 MATING COUNTER PART NUMBER: 5353511
2 MATERIAL
HOUSING: HIGH HEAT–RESISTED
CONTACT: COPPER ALLOY (t=0.15), Au PLATING.
SOLDER PEG: COPPER ALLOY (t=0.15), TIN PLATING.
3 CONTACT: Au PLATING (0.00076mm)

THIS DRAWING IS A CONTROLLED DOCUMENT.

DIMENSIONS: 単位： 粍 mm

TOLERANCES UNLESS OTHERWISE SPECIFIED: 一般公差

0 PLC	± 0.2
1 PLC	± 0.2
2 PLC	± 0.2
3 PLC	± 0.2
4 PLC	± 0.2
ANGLES	± 3°

MATERIAL 材料: 2

FINISH 仕上: 2 3

INSTRUCTION SHEET 411–5781

DWN
CHK
APVD
PRODUCT SPEC 製品規格
APPLICATION SPEC 取付適用規格
WEIGHT

CUSTOMER DRAWING

TE Connectivity Ltd.

NAME 名称: ON TAPING EMBOSS 0.5mm FS CONN.TAB ASSY WITH KEY & MYLAR,WITHOUT BOSS B1

SIZE	CAGE CODE	DRAWING NO 番号	RESTRICTED TO
A3	00779	C–5353515	–

SCALE 尺度 10:1 | SHEET 2 OF 2 | REV B4

1470–19 (1/15)