THIS DRAWING IS UNPUBLISHED. RELEASED FOR PUBLICATION 20
© COPYRIGHT 20 BY TYCO ELECTRONICS CORPORATION. ALL RIGHTS RESERVED.

LOC	DIST
A	66

REVISIONS

P	LTR	DESCRIPTION	DATE	DWN	APVD
	K	ECR-18-005151	07APR2018	TB	JDG
	K1	ECR-18-008851	08JUN2018	KH	LZ
	L	ECR-21-006794	09JUL2021	FZ	RK
	L1	ECR-23-176986	31MAY2023	FZ	JAH

PART NUMBER	REVISION	DESCRIPTION	FEED TYPE
2151082-1	K	FINE CRIMP HEIGHT ADJUST	MECHANICAL
2151082-2	L	FINE CRIMP HEIGHT ADJUST	PNEUMATIC
7-2151082-1	K	MECHANICAL AND CRIMP TOOLING KIT	MECHANICAL
7-2151082-2	L	PNEUMATIC AND CRIMP TOOLING KIT	PNEUMATIC
7-2151082-7	E	CRIMP TOOLING KIT	-

ATLANTIC VERSION TERMINATOR INTERFACE ADAPTER

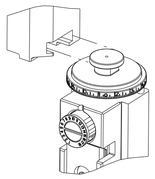

APPLICATOR DATA		
CRIMP	SIZE	TYPE
WIRE	1.16 mm [.046]	F
INSUL	1.35 mm [.053]	F
APPLICATOR INSTRUCTIONS 408-35042		

TERMINAL DATA: TE TERMINAL		TE CRIMP SPECIFICATION
TERMINAL NAME: DYNAMIC D1000-M CONTACT		
WIRE STRIP LENGTH 1.70-2.30 mm [.067-.091 IN]	INSULATION DIAMETER RANGE ∅1.08-1.60 mm [.043-.063 IN]	
TERMINAL APPLICATION SPECIFICATION (A)114-5377	-	-
(C)114-5424	-	-

TERMINALS APPLIED

TE TERMINAL	TE TERMINAL	TE TERMINAL	TE TERMINAL
(A) 1827570-2	(A) 1871303-1	(A) 1903112-2	(A) 1903120-1
(A) 1939991-2	(A) 2367817-2	(A) 2367819-2	(C) 2400015-1

TERMINAL DATA: TE TERMINAL		TE CRIMP SPECIFICATION
TERMINAL NAME: HD1 CONTACT M SIZE		
WIRE STRIP LENGTH 1.70-2.30 mm [.067-.091 IN]	INSULATION DIAMETER RANGE ∅1.08-1.60 mm [.043-.063 IN]	
TERMINAL APPLICATION SPECIFICATION -	-	-
(B)114-78021	-	-

TERMINALS APPLIED

TE TERMINAL	TE TERMINAL	TE TERMINAL	TE TERMINAL
(B) 2316663-2	(B) 2316670-2		

WIRE SIZE	CRIMP HEIGHT mm [INCH]	CRIMP HEIGHT REFERENCE SETTING (4)
22 AWG	0.80+/-0.03 [.031+/-.001]	4.6
24 AWG	0.73+/-0.03 [.029+/-.001]	5.3
26 AWG	0.67+/-0.03 [.026+/-.001]	6.0
28 AWG	0.64+/-0.03 [.025+/-.001]	6.3

1. RECOMMENDED SPARE PARTS
2. REFER TO SUPPLIED INSTRUCTION SHEET FOR CLEANING, LUBRICATION AND STORAGE OF APPLICATOR.
3. APPLY PART NUMBER 2-23419-6 LOCTITE TO THREADS OF ITEM 242.
4. CRIMP HEIGHT REFERENCE SETTING WAS THE SETTING USED WHEN THE APPLICATOR WAS QUALIFIED AT THE FACTORY. ADJUSTMENT MAY BE NECESSARY WHEN RUNNING APPLICATOR IN THE FIELD.
5. UNLESS SPECIFIED OTHERWISE TORQUE VALUES SHALL BE USED PER DOCUMENT, 101-35000.

*WARNING
ON INSTALLATION, SET WIRE DISC TO CRIMP HEIGHT REFERENCE SETTING FOR LARGEST WIRE SIZE. CRIMP HEIGHT REFERENCE SETTINGS GREATER THAN THE VALUE SHOWN MAY CAUSE DAMAGE TO THE CRIMP TOOLING, REFER TO THE INSTRUCTION SHEET FOR PROPER SETUP AND ADJUSTMENTS.

	-77	-72	-71	-2	-1	PART NO	DESCRIPTION	ITEM NO
	-	1	-	1	-	2119641-1	FEED CAM, AIR FEED	248
	-	1	1	1	1	2119082-9	CAM, SNAIL, INSULATION ADJUSTMENT	244
	-	1	1	1	1	2079764-1	WASHER, WAVE SPRING, CREST-TO-CREST	243
(3)	-	1	1	1	1	2119083-1	RETAINER, INSULATION DIAL	242
	-	1	1	1	1	7-18023-7	SCR, SKT HD CAP M3 X 4.0	241
	-	-	1	-	1	2119580-1	MECHANICAL FEED ASSEMBLY	239
	-	1	-	1	-	2844940-1	AIR FEED MODULE	238
	-	REF	REF	REF	REF	994970-2	COUNTER, MAGNETIC	164
	-	1	1	1	1	1-18028-2	WASHER, FLAT, REG M4	119
	-	1	1	1	1	2844908-1	SCREW, LOCKING	99
	-	1	1	1	1	2844907-1	POST, LOCKING	98
	-	1	1	1	1	455888-5	SPACER, CRIMPER	82
	-	1	1	1	1	1803607-3	DOCUMENTATION PACKAGE	71
	-	1	1	1	1	2119791-5	DEPRESSOR, WIRE	70
	-	1	1	1	1	2119740-1	TAG,IDENTIFICATION	67
	-	2	2	2	2	2168078-1	SCREW, DRIVE, RH, RoHS, 2 x .188	66
	-	1	1	1	1	2168083-2	SCR, SKT HD CAP, RoHS, M4 X 8.0	60
	-	1	1	1	1	5-18022-5	SCR, HEX HD CAP, M4 X 6.0	59
	-	1	1	1	1	1338685-1	PAWL, FEED	56
	-	2	2	2	2	2168083-3	SCR, SKT HD CAP, RoHS, M4 X 12.0	54
	-	2	2	2	2	2168083-5	SCR, SKT HD CAP, RoHS, M4 X 6.0	53
	-	1	2	1	2	18023-9	SCR, SKT HD CAP M4 X 6.0	49
	-	-	1	-	1	2119652-1	FEED CAM, PRE FEED	48
	-	-	1	-	1	2119653-1	FEED CAM, POST FEED	47
	-	1	1	1	1	1803583-9	APPLICATOR BASIC ASSEMBLY, SF	46
	-	1	1	1	1	1803515-1	RAM ASSEMBLY, SF ATLANTIC	44
	-	1	1	1	1	1803602-1	SCR, BHSC, RoHS (M8 X 25)	41
	-	2	2	2	2	2079383-5	SCR, BHSC, RoHS (M4 X 20)	33
	-	2	2	2	2	2-2844962-6	SPACER, CYLINDRICAL, STRIP GUIDE	30
	-	1	1	1	1	2844992-1	ASSEMBLY, STRIP GUIDE	29
	-	1	1	1	1	1320928-2	STRIP GUIDE	24
	-	1	1	1	1	2168083-2	SCR, SKT HD CAP, RoHS, M4 X 8.0	21
	-	1	1	1	1	1-18028-2	WASHER, FLAT, REG M4	20
	-	1	1	1	1	2119533-3	STRIPPER, SIDE FEED	19
	-	1	1	1	1	1463053-3	HOLD DOWN,TERMINAL	18
(1)	-	1	1	1	1	2119806-1	INSERT, SHEAR	13
	-	1	1	1	1	3-22280-3	SPRING, COMPRESSION	12
	-	1	1	1	1	1-356885-4	STOP, SHEAR	11
(1)	-	1	1	1	1	2119805-1	SHEAR HOLDER, FRONT	10
(1)	-	1	1	1	1	1803095-3	FLOATING SHEAR, FRONT	9
(1)	1	2	2	1	1	1-1729372-0	ANVIL, HD-C	8
	-	1	1	1	1	2119757-4	DEPRESSOR, SHEAR	5
	-	1	1	1	1	5-238011-6	BLOCK, CRIMPER SPACER	4
(1)	1	2	2	1	1	3-1803017-1	CRIMPER, INSULATION F	3
(1)	1	2	2	1	1	234156-6	CRIMPER, WIRE	1

ATLANTIC VERSION
Shown on sheets 1 of 4 & 2 of 4
(Pacific version shown on sheets 3 of 4 & 4 of 4)

THIS DRAWING IS A CONTROLLED DOCUMENT FOR TYCO ELECTRONICS CORPORATION. IT IS SUBJECT TO CHANGE. ANY ORIGINAL USER OF THIS DRAWING OR ORGANIZATION SHOULD BE CONTACTED FOR THE LATEST REVISION.

DIMENSIONS: mm
TOLERANCES UNLESS OTHERWISE SPECIFIED:
0 PLC ±-
1 PLC ±-
2 PLC ±-
3 PLC ±-
4 PLC ±-
ANGLES ±-
MATERIAL -
FINISH -

DWN Y YIN 31AUG2011
CHK G BAILEY 31AUG2011
APVD S XI 31AUG2011
PRODUCT SPEC -
APPLICATION SPEC -
WEIGHT -

TE Connectivity
Harrisburg, PA 17105-3608

NAME Ocean Side Feed Applicator -

SIZE	CAGE CODE	DRAWING NO	RESTRICTED TO
A1	00779	C-2151082	-

Customer Accessible Production Drawing | SCALE 1:2 | SHEET 1 OF 4 | REV L1

SHEETS 3 & 4 ARE NOT REQUIRED FOR ATLANTIC VERSION

THIS DRAWING IS UNPUBLISHED. RELEASED FOR PUBLICATION 20
© COPYRIGHT 20 BY TYCO ELECTRONICS CORPORATION. ALL RIGHTS RESERVED.

LOC	DIST
A	66

REVISIONS

P	LTR	DESCRIPTION	DATE	DWN	APVD
	-	SEE SHEET 1	-	-	-

FEED TYPE

MECHANICAL

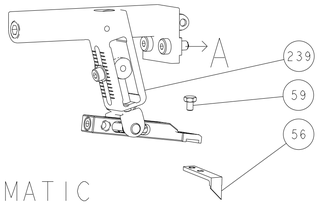

PNEUMATIC

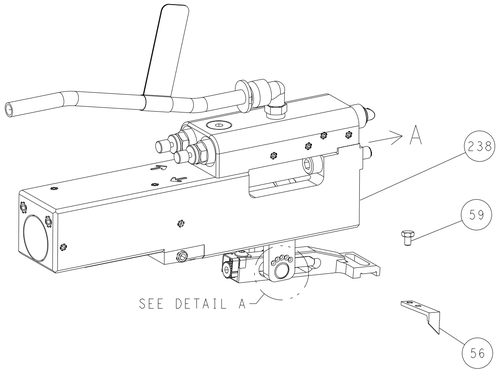

FEED SPRING SETTING POSITION
(SHOWN FROM REAR SIDE)

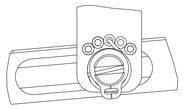

DETAIL A

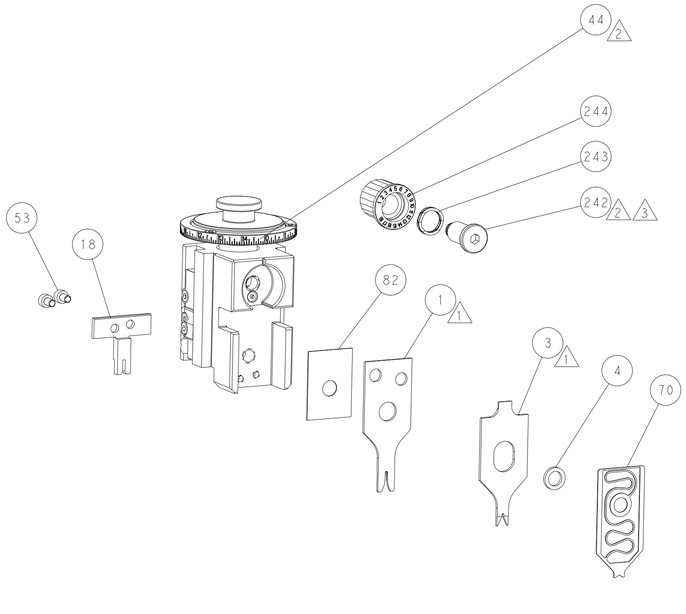

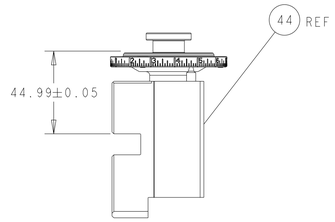

RAM SET-UP

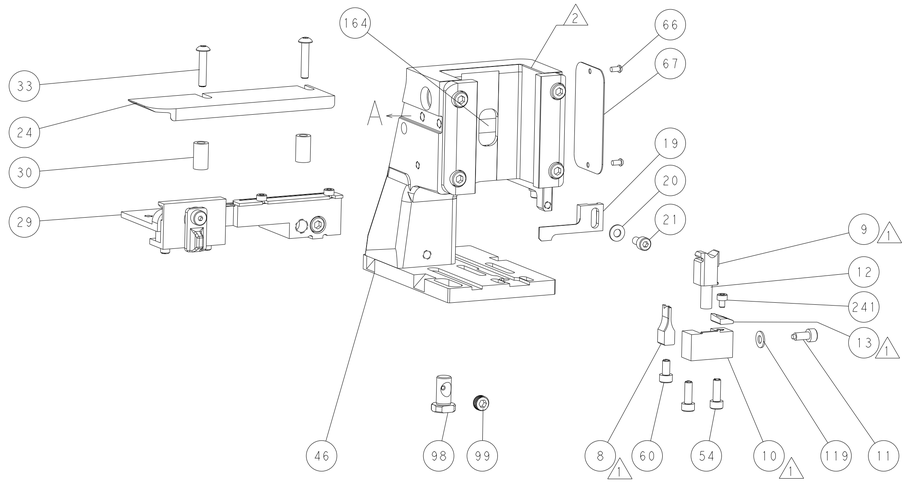

ITEM 30 LOCATED AT
FRONT HOLES

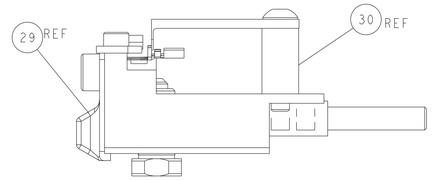

FEED TRACK POSITION
GUIDE BY INSULATION BARREL

CAM POSITIONS

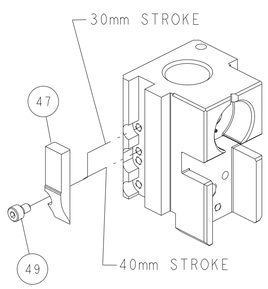

MECHANICAL
POST FEED

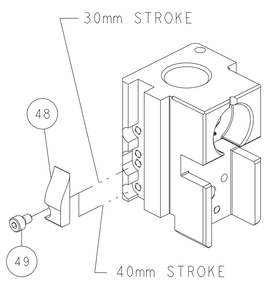

MECHANICAL
PRE FEED

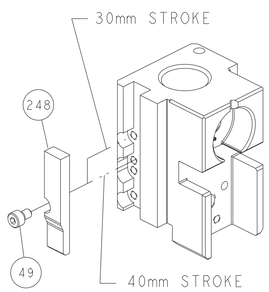

AIR FEED

ATLANTIC VERSION

Shown on sheets 1 of 4 & 2 of 4
(Pacific version shown on sheets 3 of 4 & 4 of 4)

THIS DRAWING IS A CONTROLLED DOCUMENT FOR TYCO ELECTRONICS CORPORATION
IT IS SUBJECT TO CHANGE AND THE CONTROLLING ENGINEERING ORGANIZATION
SHOULD BE CONTACTED FOR THE LATEST REVISION.

DIMENSIONS: mm

TOLERANCES UNLESS OTHERWISE SPECIFIED:
0 PLC ±-
1 PLC ±-
2 PLC ±-
3 PLC ±-
4 PLC ±-
ANGLES ±-

MATERIAL - -
FINISH - -

DWN Y.YIN	31AUG2011	TE Connectivity, Harrisburg, PA 17105-3608
CHK G.BAILEY	31AUG2011	
APVD S.XI	31AUG2011	NAME: Ocean Side Feed Applicator -
PRODUCT SPEC -		
APPLICATION SPEC -		
WEIGHT -		SIZE A1 · CAGE CODE 00779 · DRAWING NO C-2151082 · RESTRICTED TO -
Customer Accessible Production Drawing		SCALE 1:2 · SHEET 2 OF 4 · REV L1

AMP 4805 REV 31MAR2000

SHEETS 3 & 4 ARE NOT REQUIRED FOR ATLANTIC VERSION

THIS DRAWING IS UNPUBLISHED. RELEASED FOR PUBLICATION 20
© COPYRIGHT 20 BY TYCO ELECTRONICS CORPORATION. ALL RIGHTS RESERVED.

LOC	DIST
A	66

REVISIONS

P	LTR	DESCRIPTION	DATE	DWN	APVD
	-	SEE SHEET 1	-	-	-

PART NUMBER	REVISION	DESCRIPTION	FEED TYPE
2-2151082-1	K	FINE CRIMP HEIGHT ADJUST	MECHANICAL
2-2151082-2	L	FINE CRIMP HEIGHT ADJUST	PNEUMATIC
7-2151082-7	E	CRIMP TOOLING KIT	-

PACIFIC VERSION TERMINATOR INTERFACE ADAPTER

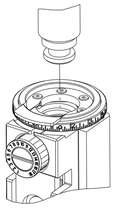

APPLICATOR DATA		
CRIMP	SIZE	TYPE
WIRE	1.16 mm [.046]	F
INSUL	1.35 mm [.053]	F
APPLICATOR INSTRUCTIONS 408-35042		

TERMINAL DATA: TE TERMINAL		TE CRIMP SPECIFICATION
TERMINAL NAME: DYNAMIC D1000-M CONTACT		
WIRE STRIP LENGTH	INSULATION DIAMETER RANGE	
1.70-2.30 mm [.067-.091 IN]	∅1.08-1.60 mm [.043-.063 IN]	
TERMINAL APPLICATION SPECIFICATION	(A)114-5377	- -
	(C)114-5424	- -
TERMINALS APPLIED		
TE TERMINAL	TE TERMINAL	TE TERMINAL	TE TERMINAL
(A) 1827570-2	(A) 1871303-1	(A) 1903112-2	(A) 1903120-1
(A) 1939991-2	(A) 2367817-2	(A) 2367819-2	(C) 2400015-1

TERMINAL DATA: TE TERMINAL		TE CRIMP SPECIFICATION
TERMINAL NAME: HD1 CONTACT M SIZE		
WIRE STRIP LENGTH	INSULATION DIAMETER RANGE	
1.70-2.30 mm [.067-.091 IN]	∅1.08-1.60 mm [.043-.063 IN]	
TERMINAL APPLICATION SPECIFICATION	-	- -
	(B)114-78021	- -
TERMINALS APPLIED		
TE TERMINAL	TE TERMINAL	TE TERMINAL	TE TERMINAL
(B) 2316663-2	(B) 2316670-2		

WIRE SIZE	CRIMP HEIGHT mm [INCH]	CRIMP HEIGHT REFERENCE SETTING (4)
22 AWG	0.80+/-0.03 [.031+/-.001]	4.6
24 AWG	0.73+/-0.03 [.029+/-.001]	5.3
26 AWG	0.67+/-0.03 [.026+/-.001]	6.0
28 AWG	0.64+/-0.03 [.025+/-.001]	6.3

(1) RECOMMENDED SPARE PARTS

(2) REFER TO SUPPLIED INSTRUCTION SHEET FOR CLEANING, LUBRICATION AND STORAGE OF APPLICATOR.

(3) APPLY PART NUMBER 2-23419-6 LOCTITE TO THREADS OF ITEM 242.

(4) CRIMP HEIGHT REFERENCE SETTING WAS THE SETTING USED WHEN THE APPLICATOR WAS QUALIFIED AT THE FACTORY. ADJUSTMENT MAY BE NECESSARY WHEN RUNNING APPLICATOR IN THE FIELD.

5. UNLESS SPECIFIED OTHERWISE TORQUE VALUES SHALL BE USED PER DOCUMENT, 101-35000.

*WARNING
ON INSTALLATION, SET WIRE DISC TO CRIMP HEIGHT REFERENCE SETTING FOR LARGEST WIRE SIZE. CRIMP HEIGHT REFERENCE SETTINGS GREATER THAN THE VALUE SHOWN MAY CAUSE DAMAGE TO THE CRIMP TOOLING, REFER TO THE INSTRUCTION SHEET FOR PROPER SETUP AND ADJUSTMENTS.

-77	-22	-21	PART NO	DESCRIPTION	ITEM NO
-	1	1	2119082-9	CAM, SNAIL, INSULATION ADJUSTMENT	244
-	1	1	2079764-1	WASHER, WAVE SPRING, CREST-TO-CREST	243
-	1	1	2119083-1	RETAINER, INSULATION DIAL	242
-	1	1	7-18023-7	SCR, SKT HD CAP M3 X 4.0	241
-	-	1	2119580-1	MECHANICAL FEED ASSEMBLY	239
-	1	-	2844940-1	AIR FEED MODULE	238
-	REF	REF	994970-2	COUNTER, MAGNETIC	164
-	1	-	2119641-2	FEED CAM, AIR FEED	151
-	1	1	2168083-8	SCR, SKT HD CAP, RoHS, M4 X 16	144
-	2	2	2168083-9	SCR, SKT HD CAP, RoHS, M4 X 20	143
-	-	1	2119653-2	FEED CAM, POST FEED	142
-	1	1	1-1803583-0	APPLICATOR BASIC ASSEMBLY, SF	141
-	1	1	1803516-1	RAM ASSEMBLY, SF PACIFIC	140
-	1	1	1-18028-2	WASHER, FLAT, REG M4	119
-	1	1	2844908-1	SCREW, LOCKING	99
-	1	1	2844907-1	POST, LOCKING	98
-	1	1	455888-5	SPACER, CRIMPER	82
-	1	1	1803607-3	DOCUMENTATION PACKAGE	71
-	1	1	2119791-5	DEPRESSOR, WIRE	70
-	1	1	2119740-1	TAG,IDENTIFICATION	67
-	2	2	2168078-1	SCREW, DRIVE, RH, RoHS, 2 x .188	66
-	1	1	5-18022-5	SCR, HEX HD CAP, M4 X 6.0	59
-	1	1	1338685-1	PAWL, FEED	56
-	2	2	2168083-5	SCR, SKT HD CAP, RoHS, M4 X 6.0	53
-	1	2	18023-9	SCR, SKT HD CAP M4 X 6.0	49
-	-	1	2119652-1	FEED CAM, PRE FEED	48
-	1	1	1803602-1	SCR, BHSC, RoHS (M8 X 25)	41
-	2	2	2079383-5	SCR, BHSC, RoHS (M4 X 20)	33
-	2	2	2-2844962-6	SPACER, CYLINDRICAL, STRIP GUIDE	30
-	1	1	2844992-1	ASSEMBLY, STRIP GUIDE	29
-	1	1	1320928-2	STRIP GUIDE	24
-	1	1	2168083-2	SCR, SKT HD CAP, RoHS, M4 X 8.0	21
-	1	1	1-18028-2	WASHER, FLAT, REG M4	20
-	1	1	2119533-3	STRIPPER, SIDE FEED	19
-	1	1	1463053-3	HOLD DOWN,TERMINAL	18
-	1	1	2119806-1	INSERT, SHEAR	13
-	1	1	3-22280-3	SPRING, COMPRESSION	12
-	1	1	1-356885-4	STOP, SHEAR	11
-	1	1	2119805-1	SHEAR HOLDER, FRONT	10
-	1	1	1803095-3	FLOATING SHEAR, FRONT	9
1	1	1	1-1729372-0	ANVIL, HD-C	8
-	1	1	2119757-4	DEPRESSOR, SHEAR	5
-	1	1	5-238011-6	BLOCK, CRIMPER SPACER	4
1	1	1	3-1803017-1	CRIMPER, INSULATION F	3
1	1	1	234156-6	CRIMPER, WIRE	1

(3) 242 (1) 10 (1) 9 (1) 8 (1) 13 (1) 3 (1) 1

PACIFIC VERSION
Shown on sheets 3 of 4 & 4 of 4
(Atlantic version shown on sheets 1 of 4 & 2 of 4)

THIS DRAWING IS A CONTROLLED DOCUMENT FOR TYCO ELECTRONICS CORPORATION. IT IS SUBJECT TO MODIFICATION. THE ORIGINATING ORGANIZATION SHOULD BE CONTACTED FOR THE LATEST REVISION.

DIMENSIONS: mm

TOLERANCES UNLESS OTHERWISE SPECIFIED:
0 PLC ±-
1 PLC ±-
2 PLC ±-
3 PLC ±-
4 PLC ±-
ANGLES ±-

MATERIAL - -
FINISH - -

DWN	Y. YIN	31AUG2011
CHK	G. BAILEY	31AUG2011
APVD	S. XI	31AUG2011
PRODUCT SPEC	-	
APPLICATION SPEC	-	
WEIGHT	-	

TE Connectivity
Harrisburg, PA 17105-3608

NAME: Ocean Side Feed Applicator -

SIZE	CAGE CODE	DRAWING NO	RESTRICTED TO
A1	00779	C-2151082	-

Customer Accessible Production Drawing | SCALE 1:2 | SHEET 3 OF 4 | REV L1

SHEETS 1 & 2 ARE NOT REQUIRED FOR PACIFIC VERSION

THIS DRAWING IS UNPUBLISHED. RELEASED FOR PUBLICATION 20
© COPYRIGHT 20 BY TYCO ELECTRONICS CORPORATION. ALL RIGHTS RESERVED.

LOC	DIST
A	66

REVISIONS

P	LTR	DESCRIPTION	DATE	DWN	APVD
	-	SEE SHEET 1	-	-	-

FEED TYPE

MECHANICAL

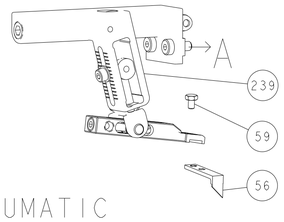

PNEUMATIC

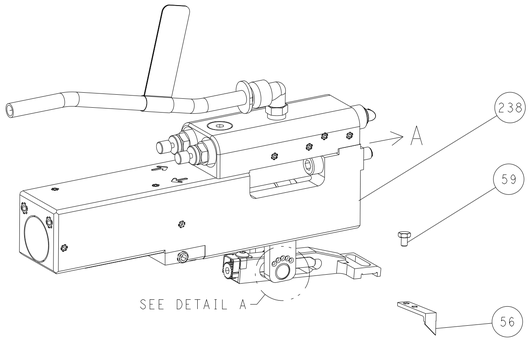

FEED SPRING SETTING POSITION
(SHOWN FROM REAR SIDE)

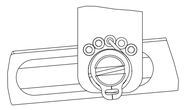

DETAIL A

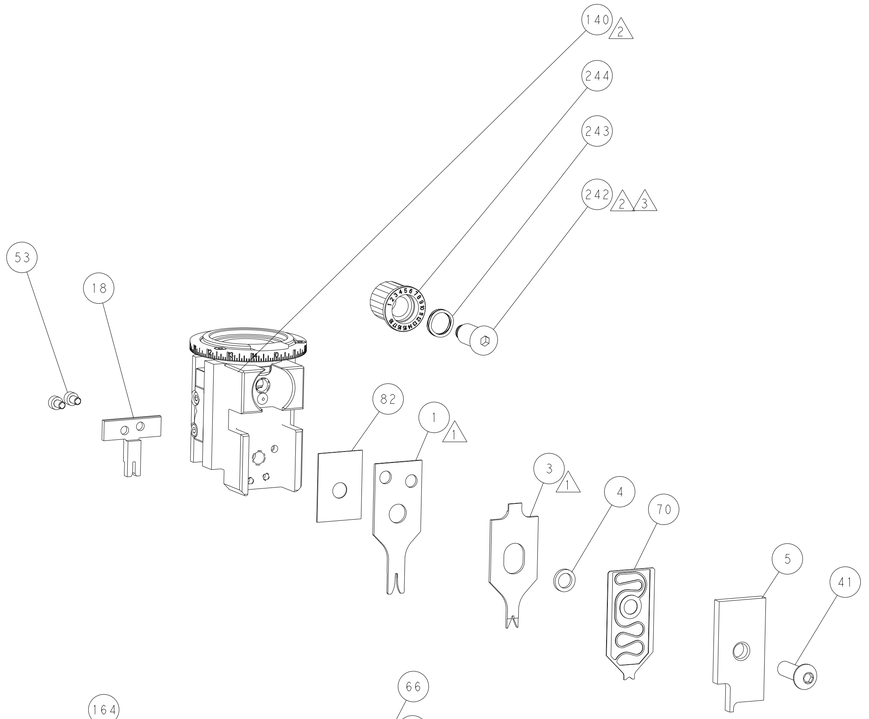

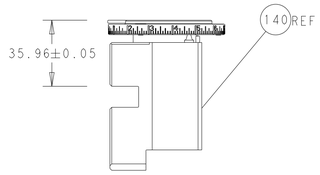

RAM SET-UP

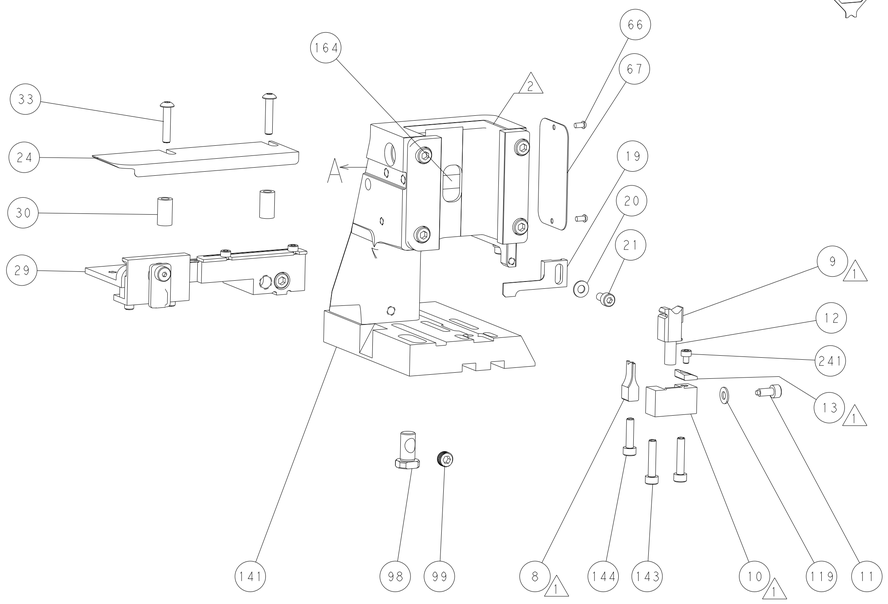

ITEM 30 LOCATED AT
FRONT HOLES

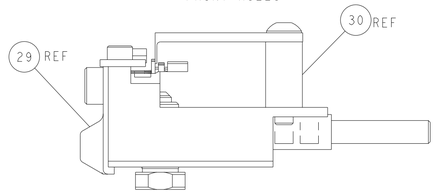

FEED TRACK POSITION
GUIDE BY INSULATION BARREL

CAM POSITIONS

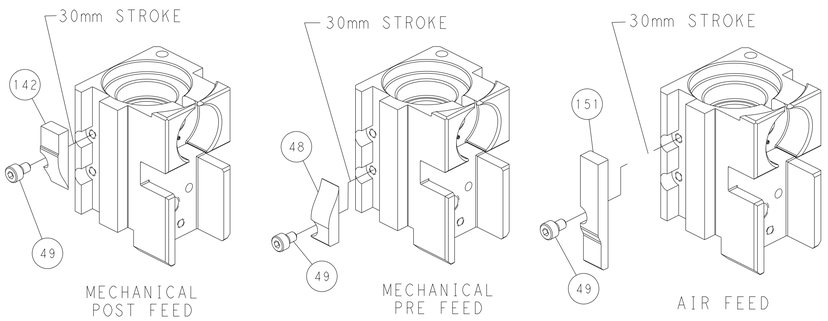

MECHANICAL POST FEED

MECHANICAL PRE FEED

AIR FEED

PACIFIC VERSION

Shown on sheets 3 of 4 & 4 of 4
(Atlantic version shown on sheets 1 of 4 & 2 of 4)

THIS DRAWING IS A CONTROLLED DOCUMENT FOR TYCO ELECTRONICS CORPORATION. IT IS SUBJECT TO CHANGE AND THE CONTROLLING ENGINEERING ORGANIZATION SHOULD BE CONTACTED FOR THE LATEST REVISION.

DIMENSIONS: mm

TOLERANCES UNLESS OTHERWISE SPECIFIED:
0 PLC ±-
1 PLC ±-
2 PLC ±-
3 PLC ±-
4 PLC ±-
ANGLES ±-

MATERIAL - - -
FINISH - -

DWN Y. YIN	31AUG2011	TE Connectivity, Harrisburg, PA 17105-3608
CHK G. BAILEY	31AUG2011	
APVD S. XI	31AUG2011	NAME: Ocean Side Feed Applicator -
PRODUCT SPEC -		
APPLICATION SPEC -		SIZE A1 · CAGE CODE 00779 · DRAWING NO C-2151082 · RESTRICTED TO -
WEIGHT -		
Customer Accessible Production Drawing		SCALE 1:2 · SHEET 4 OF 4 · REV L1

AMP 4805 REV 31MAR2000

SHEETS 1 & 2 ARE NOT REQUIRED FOR PACIFIC VERSION