THIS DRAWING IS UNPUBLISHED. | RELEASED FOR PUBLICATION – , – .
© Copyright 2022 TE Connectivity Ltd. | ALL RIGHTS RESERVED.

REVISION			
LTR	DESCRIPTION	DATE	INITIAL
AA	ORIGINAL	9–5–03	SWJ

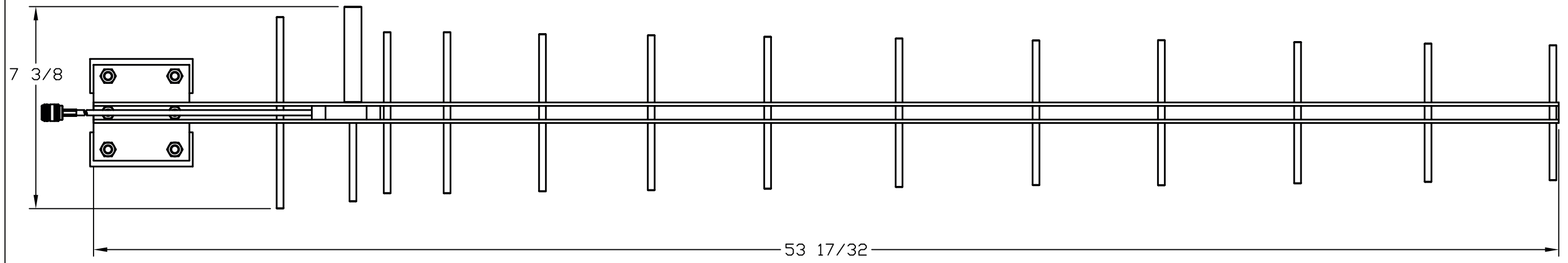

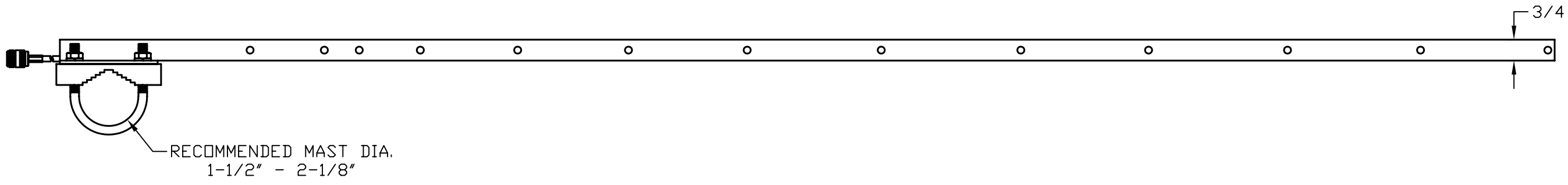

Parameter	Performance
Model Number	PC9013N
Frequency	902-928 MHz
Gain	13dBd
Polarization	Vertical
VSWR	1.5:1 Nominal
E-Plane 3 dB Beamwidth	35°
H-Plane 3 dB Beamwidth	40°
Front to Back Ratio	20dB
RF Connector	N (female)
Power	200W
Weight	3.12 lbs

MATERIAL:

DO NOT SCALE DRAWING

UNLESS OTHERWISE SPECIFIED TOLERANCES ARE:
ANGLES ± 2°
FRACTIONS ± 1/16″
.XX ± 0.030″
.XXX + 0.015″

DRAWN S JOHNSON DATE 9–5–03

ENGINEER R LITTLEFIELD DATE 9–5–03

ENGINEERING MGR A ALEVY DATE 9–5–03

FINISH:

TE connectivity

PC9013N

DRAWING NO. PC9013NMO REV AA

SCALE 1:4 SIZE B SHEET 1 OF 1