THIS DRAWING IS UNPUBLISHED. RELEASED FOR PUBLICATION -.- .
© COPYRIGHT – By – ALL RIGHTS RESERVED.

REVISIONS					
P	LTR	DESCRIPTION	DATE	DWN	APVD
	C	LC20-0014-12 / ECO-12-003549	21FEB2012	DM	BJ
	D	LC20-0031-16 / ECO-16-005675	14APR2016	DM	BJ
	E	LC20-0085-16 / ECO-16-011010	21JUL2016	DM	BJ
	F	LC20-0060-19 / ECO-19-010173	29JUN2019	DM	BJ

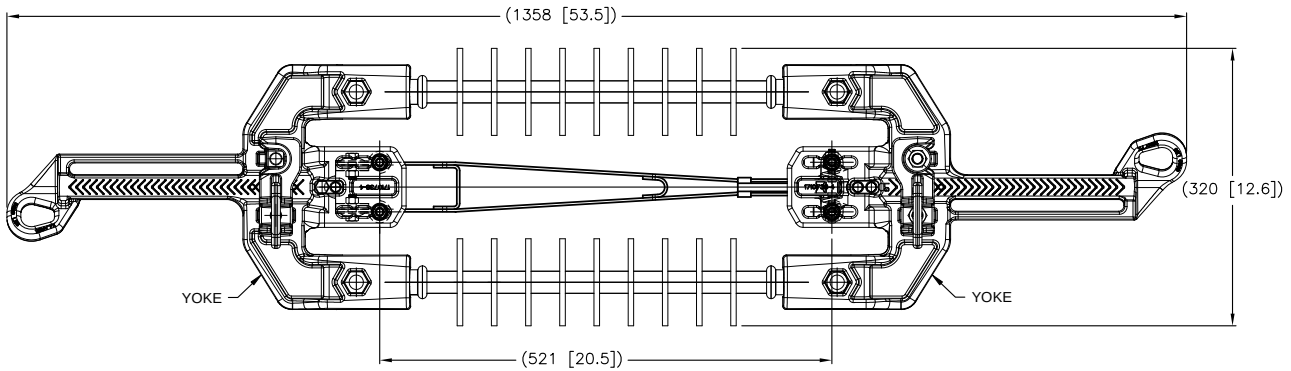

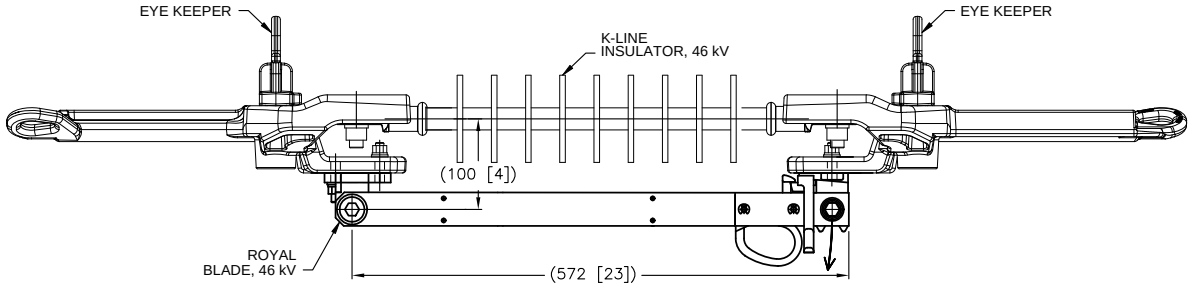

1. BODY STRENGTH: 10,000 lbs.
   PULLING EYE STRENGTH: 6000 lbs.
2. BLADE DETAIL MAY NOT BE EXACTLY AS SHOWN.
3. 1710734-1 WILL BE REPLACED BY 1710734-5 IN THE FUTURE.

40,000 AMPERE RMS, ASYMMETRICAL	25,000 AMPERE RMS, SYMMETRICAL	900 AMPERE RMS	60 HERTZ	275 kV	46 kV AC
MOMENTARY CURRENT	THREE SECOND CURRENT	CONTINUOUS CURRENT ALLOWABLE RATING: (PER ANSI C37-32.3.2.1 2002)	FREQUENCY	BASIC IMPULSE INSULATION LEVEL (BIL)	VOLTAGE
SHORT TIME CURRENT					
RATINGS					

YOKE SIZE IN ILD ASSEMBLY	PART NO.
X-SMALL	1710734-5
X-SMALL	1710734-4
X-LARGE	1710734-3
LARGE	1710734-2
SMALL	1710734-1

1710734

THIS DRAWING IS A CONTROLLED DOCUMENT.

DIMENSIONS: mm [INCHES]

TOLERANCES UNLESS OTHERWISE SPECIFIED:
0 PLC ± –
1 PLC ± –
2 PLC ± –
3 PLC ± –
4 PLC ± –
ANGLES ± –

MATERIAL –
FINISH –

DWN D. MURUGIAH 12FEB2010
CHK S. KAMEL 29MAR2010
APVD B. JOHNSON 29MAR2010
PRODUCT SPEC –
APPLICATION SPEC –
WEIGHT 0

TE Connectivity

NAME INLINE DISCONNECT SWITCH ASSEMBLY WITHOUT TAPS, AMPACT, 46 kV, 900 Amp
–

SIZE	CAGE CODE	DRAWING NO	RESTRICTED TO
A2	00779	C-1710734	–

CUSTOMER DRAWING | SCALE NTS | SHEET 1 OF 1 | REV F

1471-9 (1/15)