AT25DF021A

2-Mbit, 1.65 V Minimum SPI Serial Flash Memory with Dual-I/O Support

Features

- Single 1.65 V - 3.6 V Supply (-40°C to +85°C)
- Single 1.7 V - 3.6 V Supply (-40°C to +125°C)
- Serial Peripheral Interface (SPI) Compatible
  - Supports SPI Modes 0 and 3
  - Supports Dual I/O Operation
- 104 MHz Maximum Operating Frequency
  - Clock-to-Output (t_V) of 6 ns
- Flexible, Optimized Erase Architecture for Code + Data Storage Applications
  - Small (256 Byte) Page Erase
  - Uniform 4-kByte Block Erase
  - Uniform 32-kByte Block Erase
  - Uniform 64-kByte Block Erase
  - Full Chip Erase
- Hardware Controlled Locking of Protected Sectors through $\overline{WP}$ Pin
- 128-Byte Programmable One-Time Programmable (OTP) Security Register
  - 64 Bytes factory programmed with a unique identifier
  - 64 Bytes user programmable
- Flexible Programming
  - Byte/Page Program (1 to 256 Bytes)
  - Dual-Input Byte/Page Program (1 to 256 Bytes)
  - Sequential Program Mode Capability
- Fast Program and Erase Times
  - 1.25 ms Typical Page Program (256 Bytes) Time
  - 40 ms Typical 4-kByte Block Erase Time
  - 250 ms Typical 32-kByte Block Erase Time
  - 500 ms Typical 64-kByte Block Erase Time
- Automatic Checking and Reporting of Erase/Program Failures
- Software Controlled Reset
- JEDEC Standard Manufacturer and Device ID Read Methodology
- Low Power Dissipation
  - 200 nA Ultra Deep Power Down current (Typical)
  - 4.5 µA Deep Power-Down Current (Typical)
  - 25 µA Standby current (Typical)
  - 4.5 mA Active Read Current (Typical)
- Endurance:
  - 100,000 Program/Erase Cycles (-40°C to +85°C)
  - 20,000 Program/Erase Cycles (-40°C to +125°C)
- Data Retention: 20 Years
- Complies with Full Industrial Temperature Range
- Industry Standard Green (Pb/Halide-free/RoHS Compliant) Package Options
  - 8-lead SOIC (150-mil)
  - 8-pad Ultra Thin DFN (2 x 3 x 0.6 mm)
  - 8-pad Ultra Thin DFN (5 x 6 x 0.6 mm)
  - 8-lead TSSOP
  - 8-ball WLCSP (3 x 2 x 3 ball matrix)

© 2023 Renesas Electronics

Contents

Features 1
Figures 4
Tables 5
1. Description 6
2. Pin Descriptions and Pinouts 7
3. Block Diagram 9
4. Memory Array 10
5. Device Operation 11
5.1 Dual Output Read 11
6. Commands and Addressing 12
7. Read Commands 14
7.1 Read Array 14
7.2 Dual-Output Read Array 15
8. Program and Erase Commands 16
8.1 Byte/Page Program 16
8.2 Dual-Input Byte/Page Program 17
8.3 Sequential Program Mode 19
8.4 Page Erase 20
8.5 Block Erase 21
8.6 Chip Erase 22
9. Protection Commands and Features 23
9.1 Write Enable 23
9.2 Write Disable 23
9.3 Protect Sector 24
9.4 Unprotect Sector 25
9.5 Global Protect/Unprotect 25
9.6 Read Sector Protection Registers 27
9.7 Protected States and the Write Protect ($\overline{WP}$) Pin 28
10. Security Commands 29
10.1 Program OTP Security Register 29
10.2 Read OTP Security Register 30
11. Status Register Commands 31
11.1 Read Status Register 31
11.2 Active Status Interrupt 34
11.3 Write Status Register 35
11.4 Write Status Register Byte 2 36
12. Other Commands and Functions 37
12.1 Read Manufacturer and Device ID 37
12.2 Deep Power-Down 38
12.3 Resume from Deep Power-Down 39
12.4 Ultra-Deep Power-Down 40
12.5 Exit Ultra-Deep Power-Down 41

© 2023 Renesas Electronics

12.6 Hold 42
12.7 Reset 43

13. Electrical Specifications 44

13.1 Absolute Maximum Ratings* 44
13.2 DC and AC Operating Range 44
13.3 DC Characteristics (-40°C to +85°C) 44
13.4 DC Characteristics (-40°C to +125°C) 45
13.5 AC Characteristics - Maximum Clock Frequencies (-40°C to +85°C) 45
13.6 AC Characteristics - Maximum Clock Frequencies (-40°C to +125°C) 45
13.7 AC Characteristics – All Other Parameters 46
13.8 Program and Erase Characteristics (-40°C to +85°C) 47
13.9 Program and Erase Characteristics (-40°C to +125°C) 47

14. Power-On/Reset State 48

14.1 Power-Up/Power-Down Voltage and Timing Requirements 48
14.2 Input Test Waveforms and Measurement Levels 49
14.3 Output Test Load 49

15. AC Waveforms 50

16. Ordering Information 52

17. Packaging Information 53

17.1 8-Lead JEDEC SOIC 53
17.2 8-Pad 2 x 3 x 0.6 mm UDFN/USON 54
17.3 8-Pad 5 x 6 x 0.6 mm UDFN/USON 55
17.4 8X-TSSOP 56
17.5 8-Ball WLCSP 57

18. Revision History 58

© 2023 Renesas Electronics

Figures

Figure 1. 8-SOIC Top View . . . 8
Figure 2. 8-UDFN (Top View). . . . 8
Figure 3. 8-TSSOP Top View. . . . 8
Figure 4. WLCSP Top View . . . 8
Figure 5. Block Diagram. . . . 9
Figure 6. Memory Architecture Diagram . . . 10
Figure 7. SPI Mode 0 and 3 . . . 11
Figure 8. Read Array - 03h Opcode . . . 14
Figure 9. Read Array - 0Bh Opcode. . . . 14
Figure 10. Dual-Output Read Array . . . 15
Figure 11. Byte Program . . . 17
Figure 12. Page Program. . . . 17
Figure 13. Dual-Input Byte Program. . . . 18
Figure 14. Dual-Input Page Program . . . 18
Figure 15. Sequential Program Mode – Status Register Polling . . . 20
Figure 16. Sequential Program Mode – Waiting Maximum Byte Program Time . . . 20
Figure 17. Block Erase. . . . 21
Figure 18. Chip Erase . . . 22
Figure 19. Write Enable . . . 23
Figure 20. Write Disable. . . . 23
Figure 21. Protect Sector . . . 24
Figure 22. Unprotect Sector . . . 25
Figure 23. Read Sector Protection Register. . . . 27
Figure 24. Program OTP Security Register . . . 30
Figure 25. Read OTP Security Register. . . . 30
Figure 26. Read Status Register . . . 33
Figure 27. Active Status Interrupt. . . . 34
Figure 28. Write Status Register . . . 35
Figure 29. Write Status Register Byte 2 . . . 36
Figure 30. Read Manufacturer and Device ID . . . 38
Figure 31. Deep Power-Down . . . 38
Figure 32. Resume from Deep Power-Down . . . 39
Figure 33. Ultra-Deep Power-Down . . . 40
Figure 34. Exit Ultra-Deep Power-Down (Chip Select Toggle) . . . 41
Figure 35. Exit Ultra-Deep Power-Down (Chip Select Low). . . . 41
Figure 36. Hold Mode. . . . 42
Figure 37. Reset. . . . 43
Figure 38. Power-Up Timing . . . 48
Figure 39. Serial Input Timing . . . 50
Figure 40. Serial Output Timing . . . 50
Figure 41. $\overline{\text{WP}}$ Timing for Write Status Register Command When BPL = 1. . . . 50
Figure 42. $\overline{\text{HOLD}}$ Timing – Serial Input . . . 51
Figure 43. $\overline{\text{HOLD}}$ Timing – Serial Output . . . 51

© 2023 Renesas Electronics

Tables

Table 1. Pin Descriptions 7
Table 2. Command Listing 12
Table 3. Sector Protection Register Values 24
Table 4. Valid SPRL and Global Protect/Unprotect Conditions 26
Table 5. Read Sector Protection Register – Output Data 27
Table 6. Sector Protection Register States 28
Table 7. Hardware and Software Locking 28
Table 8. OTP Security Register 29
Table 9. Status Register Format 31
Table 10. Status Register Format – Byte 2 33
Table 11. Write Status Register Format 35
Table 12. Write Status Register Byte 2 Format 36
Table 13. Manufacturer and Device ID Information 37
Table 14. Manufacturer and Device ID Details. 37
Table 15. Voltage and Timing Requirements for Power-Up/Power-Down 48

© 2023 Renesas Electronics

1. Description

The AT25DF021A is a serial interface Flash memory device designed for use in a wide variety of high-volume consumer based applications in which program code is shadowed from Flash memory into embedded or external RAM for execution. The flexible erase architecture of the AT25DF021A, with its page erase granularity it is ideal for data storage as well, eliminating the requirement for additional data storage devices.

The erase block sizes of the AT25DF021A have been optimized to meet the requirements of today's code and data storage applications. By optimizing the size of the erase blocks, the memory space can be used much more efficiently. Because certain code modules and data storage segments must reside by themselves in their own erase regions, the wasted and unused memory space that occurs with large sectored and large block erase Flash memory devices can be greatly reduced. This increased memory space efficiency allows additional code routines and data storage segments to be added while still maintaining the same overall device density.

The device also contains a specialized OTP (One-Time Programmable) Security Register that can be used for purposes such as unique device serialization, system-level Electronic Serial Number (ESN) storage, locked key storage, etc.

Specifically designed for use in many different systems, the AT25DF021A supports read, program, and erase operations with a wide supply voltage range of 1.65 V to 3.6 V. No separate voltage is required for programming and erasing.

© 2023 Renesas Electronics

2. Pin Descriptions and Pinouts

Table 1. Pin Descriptions

Symbol	Name and Function	Asserted State	Type
$\overline{CS}$	**CHIP SELECT** Asserting the $\overline{CS}$ pin selects the device. When the $\overline{CS}$ pin is deasserted, the device is deselected and normally be placed in standby mode (not Deep Power-Down mode), and the SO pin is in a high-impedance state. When the device is deselected, data is not accepted on the SI pin. A high-to-low transition on the $\overline{CS}$ pin is required to start an operation, and a low-to-high transition is required to end an operation. When ending an internally self-timed operation such as a program or erase cycle, the device does not enter the standby mode until the completion of the operation.	Low	Input
SCK	**SERIAL CLOCK** This pin is used to provide a clock to the device and is used to control the flow of data to and from the device. Command, address, and input data present on the SI pin is always latched in on the rising edge of SCK, while output data on the SO pin is always clocked out on the falling edge of SCK.	-	Input
SI (I/O_0)	**SERIAL INPUT** The SI pin is used to shift data into the device. The SI pin is used for all data input including command and address sequences. Data on the SI pin is always latched in on the rising edge of SCK. With the Dual-Output Read commands, the SI Pin becomes an output pin (I/O_0) in conjunction with other pins to allow two bits of data on (I/O_{1-0}) to be clocked out on every falling edge of SCK. To maintain consistency with the SPI nomenclature, the SI (I/O_0) pin is referenced as the SI pin unless specifically addressing the Dual-I/O modes in which case it is referenced as I/O_0. Data present on the SI pin is ignored whenever the device is deselected ($\overline{CS}$ is deasserted).	-	Input/ Output
SO (I/O_1)	**SERIAL OUTPUT** The SO pin is used to shift data out from the device. Data on the SO pin is always clocked out on the falling edge of SCK. With the Dual-Output Read commands, the SO Pin remains an output pin (I/O_1) in conjunction with other pins to allow two bits of data on (I/O_{1-0}) to be clocked out on every falling edge of SCK. To maintain consistency with the SPI nomenclature, the SO (I/O_1) pin is referenced as the SO pin unless specifically addressing the Dual-I/O modes in which case it is referenced as I/O_1. The SO pin is in a high-impedance state whenever the device is deselected ($\overline{CS}$ is deasserted).	-	Input/ Output
$\overline{WP}$	**WRITE PROTECT** The $\overline{WP}$ pin controls the hardware locking feature of the device. See "Protection Commands and Features" on page 23 for more details on protection features and the $\overline{WP}$ pin. The $\overline{WP}$ pin is internally pulled-high and can be left floating if hardware controlled protection is not used. However, it is recommended that the $\overline{WP}$ pin also be externally connected to V_{CC} whenever possible.	Low	Input

© 2023 Renesas Electronics

Table 1. Pin Descriptions (Continued)

Symbol	Name and Function	Asserted State	Type
$\overline{HOLD}$	**HOLD** The $\overline{HOLD}$ pin is used to temporarily pause serial communication without deselecting or resetting the device. While the $\overline{HOLD}$ pin is asserted, transitions on the SCK pin and data on the SI pin is ignored, and the SO pin is in a high-impedance state. The $\overline{CS}$ pin must be asserted, and the SCK pin must be in the low state in order for a Hold condition to start. A Hold condition pauses serial communication only and does not have an effect on internally self-timed operations such as a program or erase cycle. See "Hold" on page 42 for additional details on the Hold operation. The $\overline{HOLD}$ pin is internally pulled-high and can be left floating if the Hold function is not used. However, it is recommended that the $\overline{HOLD}$ pin also be externally connected to V_{CC} whenever possible.	Low	Input
V_{CC}	**DEVICE POWER SUPPLY** The V_{CC} pin is used to supply the source voltage to the device. Do not attempt operations at invalid V_{CC} voltages because they might produce spurious results.	-	Power
GND	**GROUND** The ground reference for the power supply. GND must be connected to the system ground.	-	Power

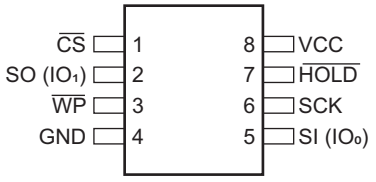

Figure 1. 8-SOIC Top View

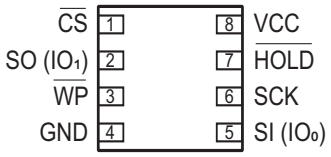

Figure 2. 8-UDFN (Top View)

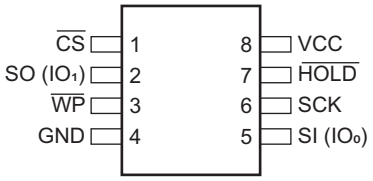

Figure 3. 8-TSSOP Top View

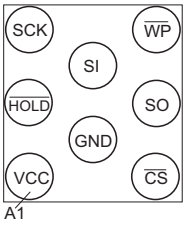

Figure 4. WLCSP Top View

© 2023 Renesas Electronics

3. Block Diagram

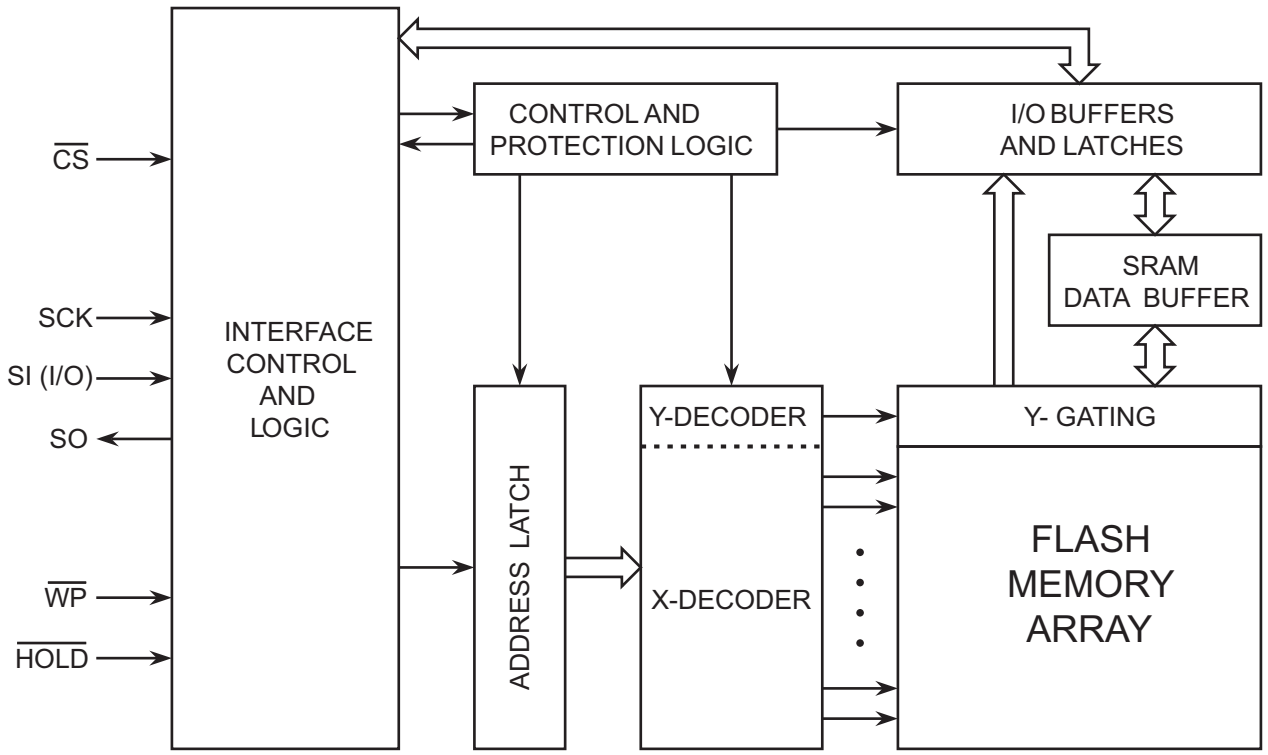

Figure 5. Block Diagram

© 2023 Renesas Electronics

4. Memory Array

To provide the greatest flexibility, the memory array of the AT25DF021A can be erased in three levels of granularity including a full chip erase. The size of the erase blocks is optimized for both code and data storage applications, allowing both code and data segments to reside in their own erase regions. The Memory Architecture Diagram illustrates the breakdown of each erase level.

	Block Erase Detail				Page Program Detail	
Internal Sectoring fo Sector Protection Function	64 kB Block Erase (D8h Command)	32 kB Block Erase (52h Command)	4 kB Block Erase (20h Command)	Block Address Range	1-256 Byte Page Program (02h Command)	Page Address Range
64 kB (Sector 3)	64 kB	32 kB	4KB	03F000h – 03FFFFh	256 Bytes	03FF00h – 03FFFFh
			4KB	03E000h – 03EFFFh	256 Bytes	03FE00h – 03FEFFh
			4KB	03D000h – 03DFFFh	256 Bytes	03FD00h – 03FDFFh
			4KB	03C000h – 03CFFFh	256 Bytes	03FC00h – 03FCFFh
			4KB	03B000h – 03BFFFh	256 Bytes	03FB00h – 03FBFFh
			4KB	03A000h – 03AFFFh	256 Bytes	03FA00h – 03FAFFh
			4KB	039000h – 039FFFh	256 Bytes	03F900h – 03F9FFh
			4KB	038000h – 038FFFh	256 Bytes	03F800h – 03F8FFh
		32 kB	4KB	037000h – 037FFFh	256 Bytes	03F700h – 03F7FFh
			4KB	036000h – 036FFFh	256 Bytes	03F600h – 03F6FFh
			4KB	035000h – 035FFFh	256 Bytes	03F500h – 03F5FFh
			4KB	034000h – 034FFFh	256 Bytes	03F400h – 03F4FFh
			4KB	033000h – 033FFFh	256 Bytes	03F300h – 03F3FFh
			4KB	032000h – 032FFFh	256 Bytes	03F200h – 03F2FFh
			4KB	031000h – 031FFFh	256 Bytes	03F100h – 03F1FFh
			4KB	030000h – 030FFFh	256 Bytes	03F000h – 03F0FFh
64 kB (Sector 2)	64 kB	32 kB	4KB	02F000h – 02FFFFh	256 Bytes	03EF00h – 03EFFFh
			4KB	02E000h – 02EFFFh	256 Bytes	03EE00h – 03EEFFh
			4KB	02D000h – 02DFFFh	256 Bytes	03ED00h – 03EDFFh
			4KB	02C000h – 02CFFFh	256 Bytes	03EC00h – 03ECFFh
			4KB	02B000h – 02BFFFh	256 Bytes	03EB00h – 03EBFFh
			4KB	02A000h – 02AFFFh	256 Bytes	03EA00h – 03EAFFh
			4KB	029000h – 029FFFh	256 Bytes	03E900h – 03E9FFh
			4KB	028000h – 028FFFh	256 Bytes	03E800h – 03E8FFh
		32 kB	4KB	027000h – 027FFFh	⋮	
			4KB	026000h – 026FFFh		
			4KB	025000h – 025FFFh		
			4KB	024000h – 024FFFh	256 Bytes	001700h – 0017FFh
			4KB	023000h – 023FFFh	256 Bytes	001600h – 0016FFh
			4KB	022000h – 022FFFh	256 Bytes	001500h – 0015FFh
			4KB	021000h – 021FFFh	256 Bytes	001400h – 0014FFh
			4KB	020000h – 020FFFh	256 Bytes	001300h – 0013FFh
⋮	⋮	⋮	⋮		256 Bytes	001200h – 0012FFh
					256 Bytes	001100h – 0011FFh
					256 Bytes	001000h – 0010FFh
64 kB (Sector 0)	64 kB	32 kB	4KB	00F000h – 00FFFFh	256 Bytes	000F00h – 000FFFh
			4KB	00E000h – 00EFFFh	256 Bytes	000E00h – 000EFFh
			4KB	00D000h – 00DFFFh	256 Bytes	000D00h – 000DFFh
			4KB	00C000h – 00CFFFh	256 Bytes	000C00h – 000CFFh
			4KB	00B000h – 00BFFFh	256 Bytes	000B00h – 000BFFh
			4KB	00A000h – 00AFFFh	256 Bytes	000A00h – 000AFFh
			4KB	009000h – 009FFFh	256 Bytes	000900h – 0009FFh
			4KB	008000h – 008FFFh	256 Bytes	000800h – 0008FFh
		32 kB	4KB	007000h – 007FFFh	256 Bytes	000700h – 0007FFh
			4KB	006000h – 006FFFh	256 Bytes	000600h – 0006FFh
			4KB	005000h – 005FFFh	256 Bytes	000500h – 0005FFh
			4KB	004000h – 004FFFh	256 Bytes	000400h – 0004FFh
			4KB	003000h – 003FFFh	256 Bytes	000300h – 0003FFh
			4KB	002000h – 002FFFh	256 Bytes	000200h – 0002FFh
			4KB	001000h – 001FFFh	256 Bytes	000100h – 0001FFh
			4KB	000000h – 000FFFh	256 Bytes	000000h – 0000FFh

Figure 6. Memory Architecture Diagram

© 2023 Renesas Electronics

5. Device Operation

The AT25DF021A is controlled by a set of commands that are sent from a host controller, commonly referred to as the SPI Master. The SPI Master communicates with the AT25DF021A through the SPI bus which is comprised of four signal lines: Chip Select ($\overline{CS}$), Serial Clock (SCK), Serial Input (SI), and Serial Output (SO).

The SPI protocol defines a total of four modes of operation (mode 0, 1, 2, or 3) with each mode differing in respect to the SCK polarity and phase and how the polarity and phase control the flow of data on the SPI bus. The AT25DF021A supports the two most common modes, SPI Modes 0 and 3. The only difference between SPI Modes 0 and 3 is the polarity of the SCK signal when in the inactive state (when the SPI Master is in standby mode and not transferring any data). With SPI Modes 0 and 3, data is always latched in on the rising edge of SCK and always output on the falling edge of SCK.

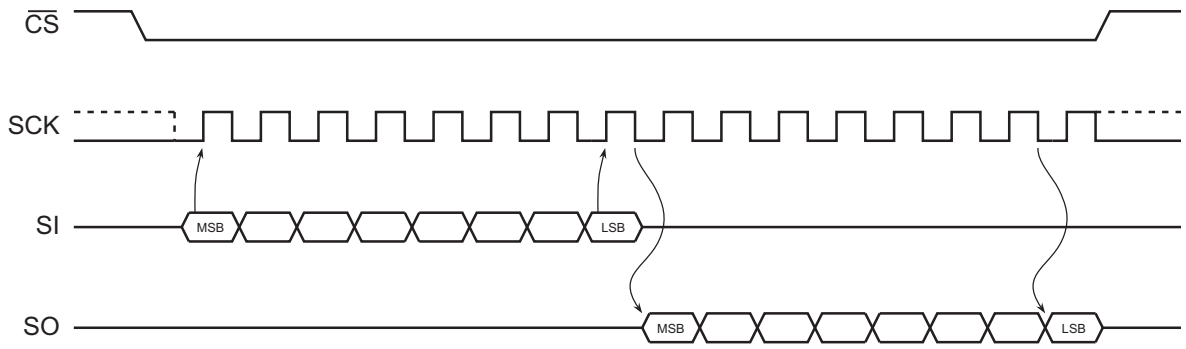

Figure 7. SPI Mode 0 and 3

5.1 Dual Output Read

The AT25DF021A features a Dual-Output Read mode that allow two bits of data to be clocked out of the device every clock cycle to improve throughput. To do this, both the SI and SO pins are used as outputs for the transfer of data bytes. With the Dual-Output Read Array command, the SI pin becomes an output along with the SO pin.

© 2023 Renesas Electronics

6. Commands and Addressing

A valid command or operation must always be started by first asserting the $\overline{CS}$ pin. After the $\overline{CS}$ pin has been asserted, the host controller must then clock out a valid 8-bit opcode on the SPI bus. Following the opcode, command-dependent information, such as address and data bytes, are then clocked out by the host controller. All opcode, address, and data bytes are transferred with the most-significant bit (MSB) first. An operation is ended by deasserting the $\overline{CS}$ pin.

Opcodes not supported by the AT25DF021A are ignored by the device and no operations are started. The device continues to ignore any data presented on the SI pin until the start of the next operation ($\overline{CS}$ pin being deasserted and then reasserted). Also, if the $\overline{CS}$ pin is deasserted before complete opcode and address information is sent to the device, then no operation is performed and the device simply returns to the idle state and wait for the next operation.

Addressing of the device requires a total of three bytes of information to be sent, representing address bits A23-A0. Since the upper address limit of the AT25DF021A memory array is 00FFFFh, address bits A23-A16 are always ignored by the device.

Table 2. Command Listing

Command		Opcode		Clock Frequency	Address Bytes	Dummy Bytes	Data Bytes
Read Commands							
	Read Array	0Bh	0000 1011	Up to 104 MHz	3	1	1+
		03h	0000 0011	Up to 33 MHz[1]	3	0	1+
	Dual Output Read	3Bh	0011 1011	Up to 104 MHz	3	1	1+
Program and Erase Commands							
	Page Erase	81h	1000 0001	Up to 104 MHz	3	0	0
	Block Erase (4 kBytes)	20h	0010 0000	Up to 104 MHz	3	0	0
	Block Erase (32 kBytes)	52h	0101 0010	Up to 104 MHz	3	0	0
	Block Erase (64 kBytes)	D8h	1101 1000	Up to 104 MHz	3	0	0
	Chip Erase	60h	0110 0000	Up to 104 MHz	0	0	0
		C7h	1100 0111	Up to 104 MHz	0	0	0
	Byte/Page Program (1 to 256 Bytes)	02h	0000 0010	Up to 104 MHz	3	0	1+
	Sequential Program Mode	ADh	1010 1101	Up to 104 MHz	3, 0[2]	0	1
		AFh	1010 1111	Up to 104 MHz	3, 0[2]	0	1
	Dual-Input Byte/Page Program (1 to 256 bytes)	A2h	1010 0010	Up to 104 MHz	3	0	1+
Protection Commands							
	Write Enable	06h	0000 0110	Up to 104 MHz	0	0	0
	Write Disable	04h	0000 0100	Up to 104 MHz	0	0	0
	Protect Sector	36h	0011 0110	Up to 104 MHz	3	0	0
	Unprotect Sector	39h	0011 1001	Up to 104 MHz	3	0	0
	Read Sector Protection Registers	3Ch	0011 1100	Up to 104 MHz	3	0	1+
Security Commands							
	Program OTP Security Register	9Bh	1001 1011	Up to 104 MHz	3	0	1+
	Read OTP Security Register	77h	0111 0111	Up to 104 MHz	3	2	1+
Status Register Commands							
	Read Status Register	05h	0000 0101	Up to 104 MHz	0	0	1+
	Active Status Interrupt	25h	0010 0101	Up to 104 MHz	0	1	0
	Write Status Register Byte 1	01h	0000 0001	Up to 104 MHz	0	0	1
	Write Status Register Byte 2	31h	0011 0001	Up to 104 MHz	0	0	1

© 2023 Renesas Electronics

Table 2. Command Listing (Continued)

Command		Opcode		Clock Frequency	Address Bytes	Dummy Bytes	Data Bytes
Miscellaneous Commands							
	Reset	F0h	1111 0000	Up to 104 MHz	0	0	1(D0h)
	Read Manufacturer and Device ID	9Fh	1001 1111	Up to 104 MHz	0	0	1 to 4
	Deep Power-Down	B9h	1011 1001	Up to 104 MHz	0	0	0
	Resume from Deep Power-Down	ABh	1010 1011	Up to 104 MHz	0	0	0
	Ultra Deep Power-Down	79h	0111 1001	Up to 104 MHz	0	0	0

1. Varies by voltage range. See **"AC Characteristics - Maximum Clock Frequencies (-40°C to +125°C)" on page 45**
2. Three address bytes are required for the first operation to designate the address to start programming. Afterwards, the internal address counter automatically increments, so subsequent Sequential Program Mode operations only require clocking in of the opcode and the data byte until the Sequential Program Mode has been exited.

© 2023 Renesas Electronics

7. Read Commands

7.1 Read Array

The Read Array command can be used to sequentially read a continuous stream of data from the device by simply providing the clock signal once the initial starting address is specified. The device incorporates an internal address counter that automatically increments every clock cycle.

Two opcodes (0Bh and 03h) can be used for the Read Array command. The use of each opcode depends on the maximum clock frequency that is used to read data from the device. The 0Bh opcode can be used at any clock frequency up to the maximum specified by f_{CLK}, and the 03h opcode can be used for lower frequency read operations up to the maximum specified by f_{RDLF}.

To perform the Read Array operation, the $\overline{CS}$ pin must first be asserted and the appropriate opcode (0Bh or 03h) must be clocked into the device. After the opcode has been clocked in, the three address bytes must be clocked in to specify the starting address location of the first byte to read within the memory array. Following the three address bytes, an additional dummy byte must be clocked into the device if the 0Bh opcode is used for the Read Array operation.

After the three address bytes (and the dummy byte if using opcode 0Bh) have been clocked in, additional clock cycles result in data being output on the SO pin. The data is always output with the MSB of a byte first. When the last byte (03FFFFh) of the memory array has been read, the device continues reading back at the beginning of the array (000000h). No delays are incurred when wrapping around from the end of the array to the beginning of the array.

Deasserting the $\overline{CS}$ pin stops the read operation and put the SO pin into high-impedance state. The $\overline{CS}$ pin can be deasserted at any time and does not require a full byte of data be read.

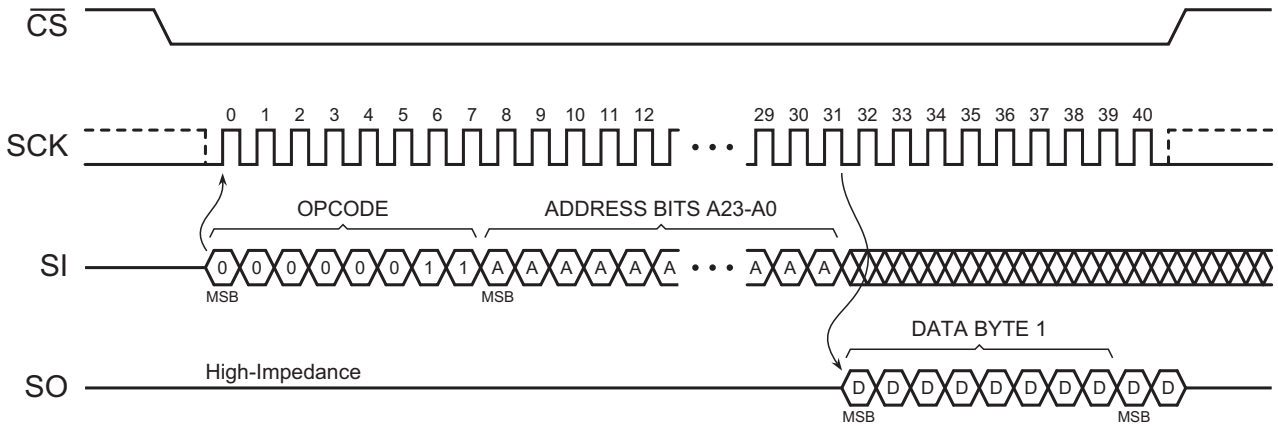

Figure 8. Read Array - 03h Opcode

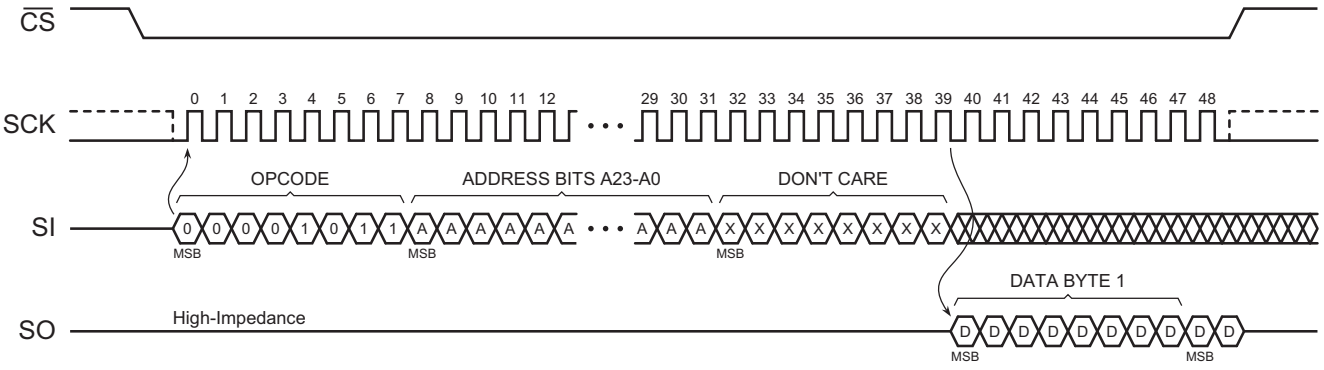

Figure 9. Read Array - 0Bh Opcode

© 2023 Renesas Electronics

7.2 Dual-Output Read Array

The Dual-Output Read Array command is similar to the standard Read Array command and can be used to sequentially read a continuous stream of data from the device by simply providing the clock signal once the initial starting address has been specified. Unlike the standard Read Array command, however, the Dual-Output Read Array command allows two bits of data to be clocked out of the device on every clock cycle, rather than just one.

The Dual-Output Read Array command can be used at any clock frequency, up to the maximum specified by f_{RDDO}. To perform the Dual-Output Read Array operation, the $\overline{CS}$ pin must first be asserted and then the opcode 3Bh must be clocked into the device. After the opcode has been clocked in, the three address bytes must be clocked in to specify the location of the first byte to read within the memory array. Following the three address bytes, a single dummy byte must also be clocked into the device.

After the three address bytes and the dummy byte have been clocked in, additional clock cycles result in data being output on both the SO and SI pins. The data is always output with the MSB of a byte first and the MSB is always output on the SO pin. During the first clock cycle, bit seven of the first data byte is output on the SO pin, while bit six of the same data byte is output on the SIO pin. During the next clock cycle, bits five and four of the first data byte are output on the SO and SIO pins, respectively. The sequence continues with each byte of data being output after every four clock cycles. When the last byte (03FFFFh) of the memory array has been read, the device continues reading from the beginning of the array (000000h). No delays are incurred when wrapping around from the end of the array to the beginning of the array.Deasserting the $\overline{CS}$ pin stops the read operation and put the SO and SI pins into a high-impedance state. The $\overline{CS}$ pin can be deasserted at any time and does not require that a full byte of data be read.

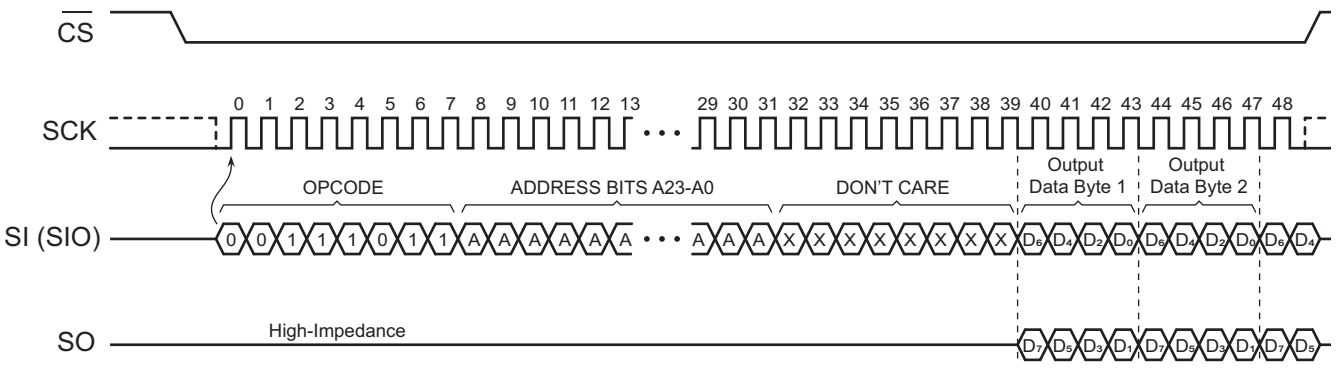

Figure 10. Dual-Output Read Array

© 2023 Renesas Electronics

8. Program and Erase Commands

8.1 Byte/Page Program

The Byte/Page Program command allows anywhere from a single byte of data to 256 bytes of data to be programmed into previously erased memory locations. An erased memory location is one that has all eight bits set to the logical 1 state (a byte value of FFh). Before a Byte/Page Program command can be started, the Write Enable command must have been previously issued to the device (see "Write Enable" on page 23) to set the Write Enable Latch (WEL) bit of the Status Register to a logical 1 state.

To perform a Byte/Page Program command, an opcode of 02h must be clocked into the device followed by the three address bytes denoting the first byte location of the memory array to begin programming at. After the address bytes have been clocked in, data can then be clocked into the device and are stored in an internal buffer.

If the starting memory address denoted by A23-A0 does not fall on an even 256-byte page boundary (A7-A0 are not all 0), then special circumstances regarding which memory locations to be programmed apply. In this situation, any data that is sent to the device that goes beyond the end of the page wraps around back to the beginning of the same page. For example, if the starting address denoted by A23-A0 is 0000FEh, and three bytes of data are sent to the device, then the first two bytes of data are programmed at addresses 0000FEh and 0000FFh while the last byte of data is programmed at address 000000h. The remaining bytes in the page (addresses 000001h through 0000FDh) are not programmed and remain in the erased state (FFh). Also, if more than 256 bytes of data are sent to the device, then only the last 256 bytes sent are latched into the internal buffer.

When the $\overline{CS}$ pin is deasserted, the device takes the data stored in the internal buffer and program it into the appropriate memory array locations based on the starting address specified by A23-A0 and the number of data bytes sent to the device. If less than 256 bytes of data were sent to the device, then the remaining bytes within the page are not programmed and remain in the erased state (FFh). The programming of the data bytes is internally self-timed and takes place in a time of t_{PP} or t_{BP} if only programming a single byte.

The three address bytes and at least one complete byte of data must be clocked into the device before the $\overline{CS}$ pin is deasserted, and the $\overline{CS}$ pin must be deasserted on even byte boundaries (multiples of eight bits); otherwise, the device stops the operation and no data are programmed into the memory array. Also, if the memory is in the protected state (see "Protect Sector" on page 24), then the Byte/Page Program command is not executed, and the device returns to the idle state once the $\overline{CS}$ pin has been deasserted. The WEL bit in the Status Register is reset back to the logical 0 state if the program cycle stops due to an incomplete address being sent, an incomplete byte of data being sent, the $\overline{CS}$ pin being deasserted on uneven byte boundaries, or because the memory location to be programmed is protected.

While the device is programming, the Status Register can be read and indicates that the device is busy. For faster throughput, it is recommended that the Status Register be polled rather than waiting the t_{BP} or t_{PP} time to determine if the data bytes have finished programming. For fastest throughput and least power consumption, it is recommended that the Active Status Interrupt command 25h be used. After the initial 16 clocks, no more clocks are required. Once the BUSY cycle is done, SO is driven low immediately to signal the device has finished programming.At some point before the program cycle completes, the WEL bit in the Status Register is reset back to the logical 0 state.

The device also incorporates an intelligent programming algorithm that can detect when a byte location fails to program properly. If a programming error arises, it is indicated by the EPE bit in the Status Register.

© 2023 Renesas Electronics

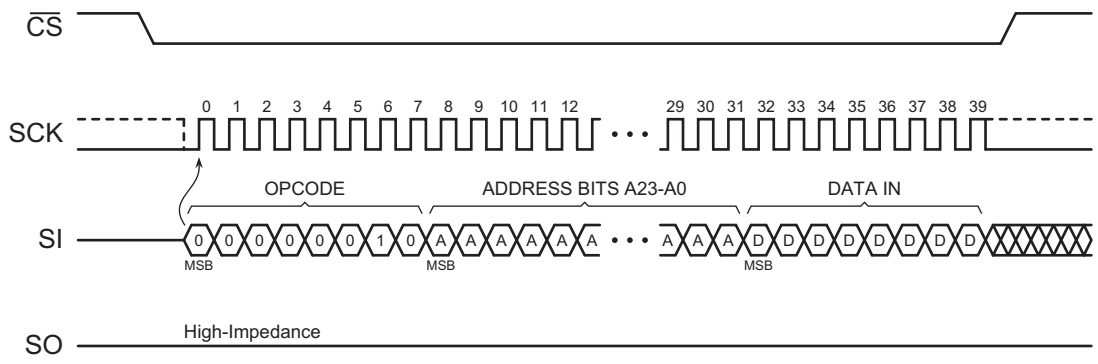

Figure 11. Byte Program

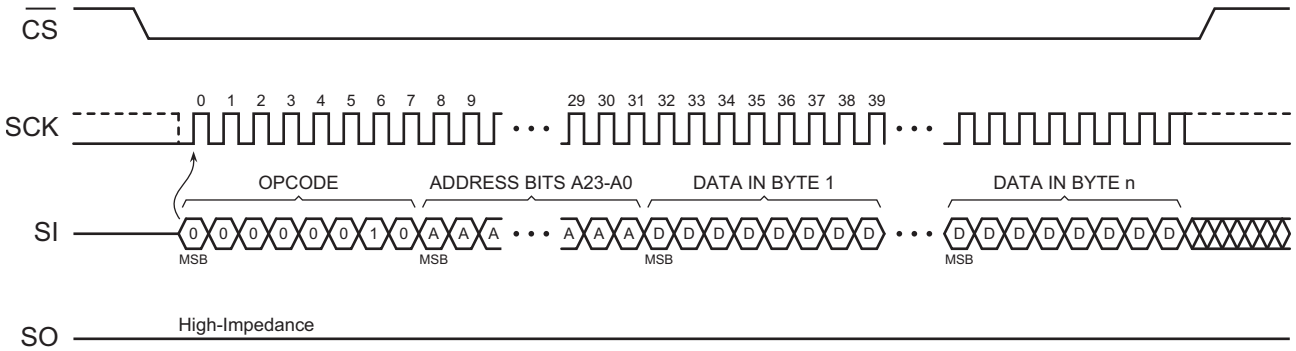

Figure 12. Page Program

8.2 Dual-Input Byte/Page Program

The Dual-Input Byte/Page Program command is similar to the standard Byte/Page Program command and can be used to program anywhere from a single byte of data up to 256 bytes of data into previously erased memory locations. Unlike the standard Byte/Page Program command, however, the Dual-Input Byte/Page Program command allows two bits of data to be clocked into the device on every clock cycle rather than just one.

Before the Dual-Input Byte/Page Program command can be started, the Write Enable command must have been previously issued to the device (see "Write Enable" on page 23) to set the Write Enable Latch (WEL) bit of the Status Register to a Logical 1 state. To perform a Dual-Input Byte/Page Program command, an A2h opcode must be clocked into the device followed by the three address bytes denoting the first location of the memory array to begin programming at. After the address bytes have been clocked in, data can then be clocked into the device two bits at a time on both the SO and SI pins.

The data is always input with the MSB of a byte first, and the MSB is always input on the SO pin. During the first clock cycle, bit seven of the first data byte is input on the SO pin while bit six of the same data byte is input on the SI pin. During the next clock cycle, bits five and four of the first data byte are input on the SO and SI pins, respectively. The sequence continues with each byte of data being input after every four clock cycles. Like the standard Byte/Page Program command, all data clocked into the device are stored in an internal buffer.

If the starting memory address denoted by A23-A0 does not fall on an even 256-byte page boundary (A7-A0 are not all 0), then special circumstances regarding which memory locations are to be programmed apply. In this situation, any data that are sent to the device that go beyond the end of the page wrap around to the beginning of the same page. Also, if more than 256 bytes of data is sent to the device, then only the last 256 bytes sent are latched into the internal buffer.

For example: If the starting address denoted by A23-A0 is 0000FEh and three bytes of data are sent to the device, then the first two bytes of data are programmed at addresses 0000FEh and 0000FFh, while the last byte of data is

© 2023 Renesas Electronics

programmed at address 000000h. The remaining bytes in the page (addresses 000001h through 0000FDh) are not programmed and remain in the erased state (FFh).

When the $\overline{CS}$ pin is deasserted, the device programs the data stored in the internal buffer into the appropriate memory array locations based on the starting address specified by A23-A0 and the number of data bytes sent to the device. If fewer than 256 bytes of data is sent to the device, then the remaining bytes within the page are not programmed and remain in the erased state (FFh). The programming of the data bytes is internally self-timed and takes place in a time of t_{PP} or t_{BP} if only programming a page (t_{PP}) or a single byte (t_{BP}).

The three address bytes and at least one complete byte of data must be clocked into the device before the $\overline{CS}$ pin is deasserted, and the $\overline{CS}$ pin must be deasserted on even byte boundaries (multiples of eight bits); otherwise, the device stops the operation and no data are programmed into the memory array. Also, if the address specified by A23-A0 points to a memory location within a sector that is in the protected state (see "Protect Sector" on page 24), then the Byte/Page Program command is not executed and the device returns to the idle state once the $\overline{CS}$ pin has been deasserted. The WEL bit in the Status Register is reset back to the Logical 0 state if the program cycle stops due to an incomplete address being sent, an incomplete byte of data being sent, the $\overline{CS}$ pin being deasserted on uneven byte boundaries, or because the memory location to be programmed is protected or locked down.

While the device is programming, the Status Register can be read and indicates that the device is busy. For faster throughput, it is recommended that the Status Register be polled rather than waiting the t_{BP} or t_{PP} time to determine if the data bytes have finished programming. For fastest throughput and least power consumption, it is recommended that the Active Status Interrupt command 25h be used. At some point before the program cycle completes, the WEL bit in the Status Register is reset back to the Logical 0 state.

The device also incorporates an intelligent programming algorithm that can detect when a byte location fails to program properly. If a programming error arises, it is indicated by the EPE bit in the Status Register.

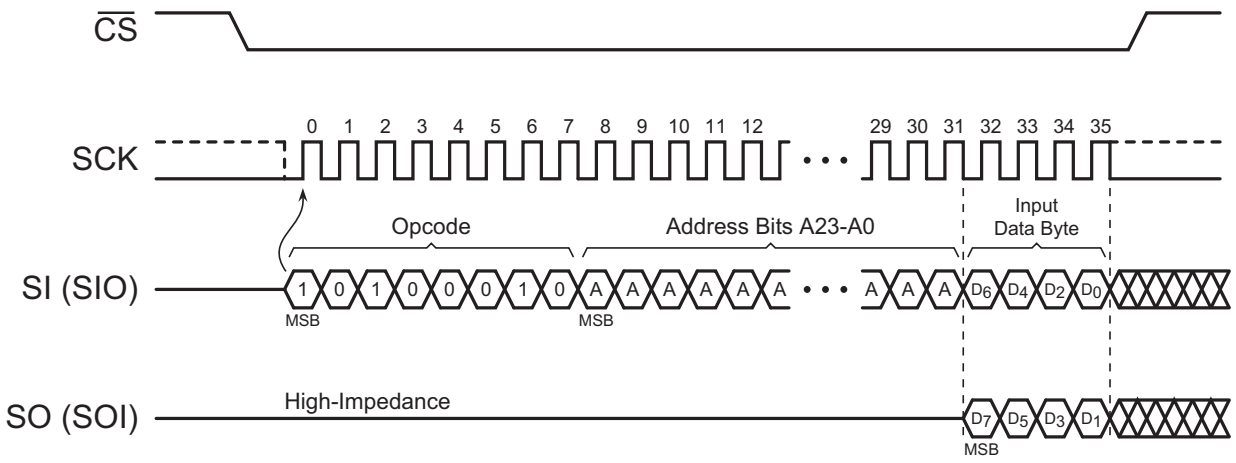

Figure 13. Dual-Input Byte Program

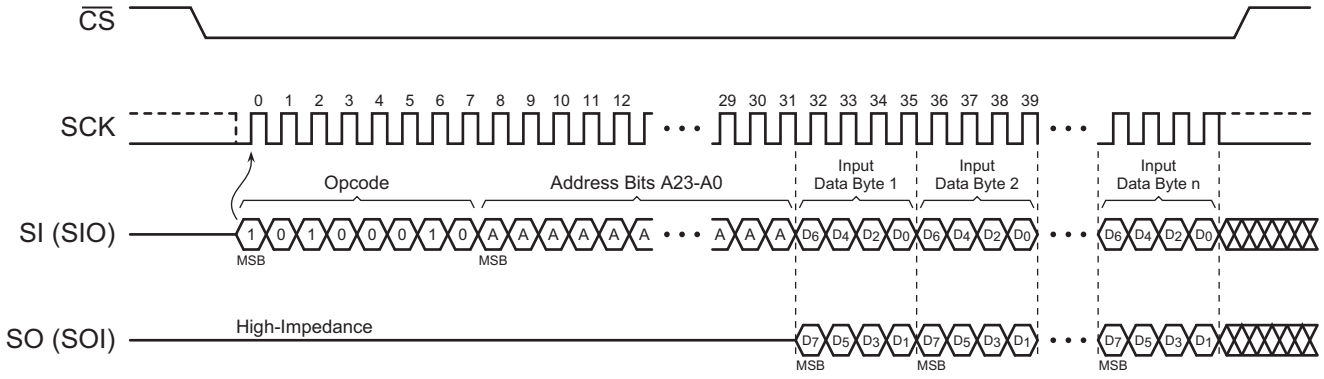

Figure 14. Dual-Input Page Program

© 2023 Renesas Electronics

8.3 Sequential Program Mode

The Sequential Program Mode improves throughput over the Byte/Page Program command when the Byte/Page Program command is used to program single bytes only into consecutive address locations. For example, some systems are designed to program only a single byte of information at a time and cannot use a buffered Page Program operation due to design restrictions. In such a case, the system would normally have to perform multiple Byte Program operations in order to program data into sequential memory locations. This approach can add considerable system overhead and SPI bus traffic.

The Sequential Programming Mode helps reduce system overhead and bus traffic by incorporating an internal address counter that keeps track of the byte location to program, thereby eliminating the need to supply an address sequence to the device for every byte to program. When using the Sequential Program mode, all address locations to be programmed must be in the erased state. Before the Sequential Program mode can first be entered, the Write Enable command must have been previously issued to the device to set the WEL bit of the Status Register to a logical 1 state.

To start the Sequential Program Mode, the $\overline{CS}$ pin must first be asserted, and either an opcode of ADh or AFh must be clocked into the device. For the first program cycle, three address bytes must be clocked in after the opcode to designate the first byte location to program. After the address bytes have been clocked in, the byte of data to be programmed can be sent to the device. Deasserting the $\overline{CS}$ pin starts the internally self-timed program operation, and the byte of data is programmed into the memory location specified by A23 - A0.

After the first byte has been successfully programmed, a second byte can be programmed by simply reasserting the $\overline{CS}$ pin, clocking in the ADh or AFh opcode, and then clocking in the next byte of data. When the $\overline{CS}$ pin is deasserted, the second byte of data is programmed into the next sequential memory location. The process would be repeated for any additional bytes. There is no need to reissue the Write Enable command once the Sequential Program Mode has been entered.

When the last desired byte has been programmed into the memory array, the Sequential Program Mode operation can be stopped by reasserting the $\overline{CS}$ pin and sending the Write Disable command to the device to reset the WEL bit in the Status Register back to the logical 0 state.

If more than one byte of data is ever clocked in during each program cycle, then only the last byte of data sent on the SI pin is stored in the internal latches. The programming of each byte is internally self-timed and takes place in a time of t_{BP}. For each program cycle, a complete byte of data must be clocked into the device before the $\overline{CS}$ pin is deasserted, and the $\overline{CS}$ pin must be deasserted on even byte boundaries (multiples of eight bits); otherwise, the device stops the operation, the byte of data is not programmed into the memory array, and the WEL bit in the Status Register is reset back to the logical 0 state.

If the address initially specified by A23 - A0 points to a memory location within a sector that is in the protected state, then the Sequential Program Mode command is not executed, and the device returns to the idle state once the $\overline{CS}$ pin has been deasserted. The WEL bit in the Status Register is also reset back to the logical 0 state.

There is no address wrapping when using the Sequential Program Mode. Thus, when the last byte (03FFFFh) of the memory array has been programmed, the device automatically exits the Sequential Program mode and reset the WEL bit in the Status Register back to the logical 0 state. Also, the Sequential Program mode does not automatically skip over protected sectors; thus, once the highest unprotected memory location in a programming sequence has been programmed, the device automatically exits the Sequential Program mode and reset the WEL bit in the Status Register. For example, if Sector 1 was protected and Sector 0 was currently being programmed, once the last byte of Sector 0 was programmed, the Sequential Program mode would automatically end. To continue programming with Sector 2, the Sequential Program mode would have to be restarted by supplying the ADh or AFh opcode, the three address bytes, and the first byte of Sector 2 to program.

While the device is programming a byte, the Status Register can be read and indicates that the device is busy. For faster throughput, it is recommended that the Status Register be polled at the end of each program cycle rather than waiting the t_{BP} time to determine if the byte has finished programming before starting the next Sequential Program mode cycle.

© 2023 Renesas Electronics

The device also incorporates an intelligent programming algorithm that can detect when a byte location fails to program properly. If a programming error arises, it is indicated by the EPE bit in the Status Register.

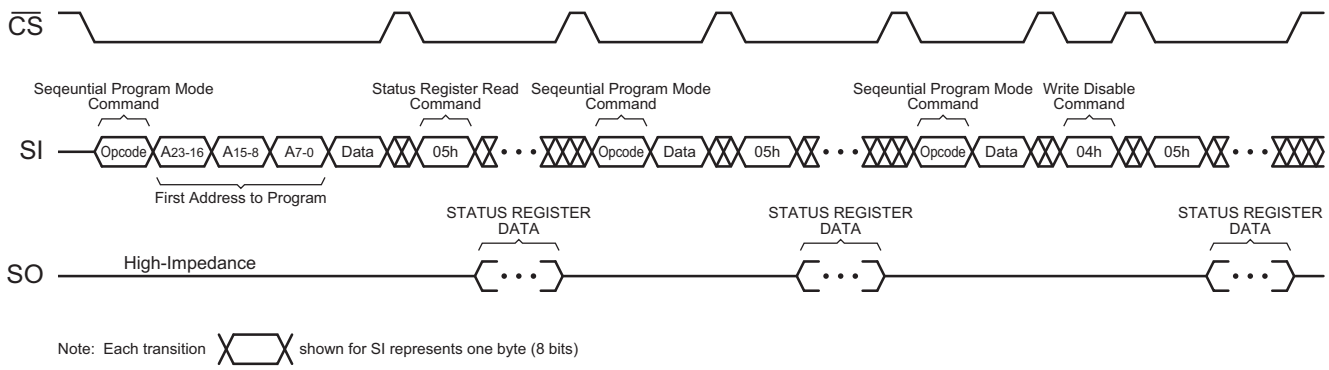

Figure 15. Sequential Program Mode – Status Register Polling

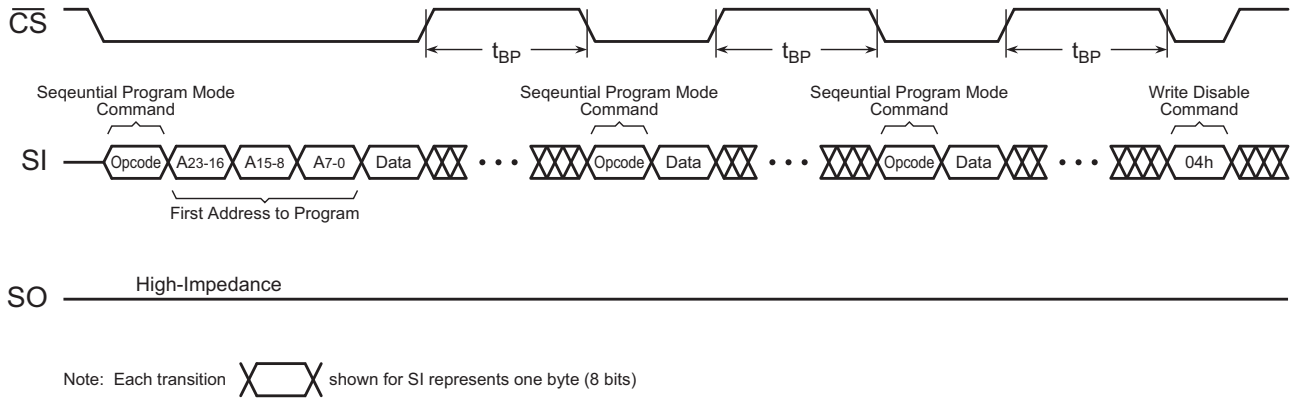

Figure 16. Sequential Program Mode – Waiting Maximum Byte Program Time

8.4 Page Erase

Page Erase for 2Mbit, 1024 Pages [ten (10) page address bits, PA<9:0>] of 256Bytes each.

The Page Erase command can be used to individually erase any page in the main memory array. The Main Memory Byte/Page Program command can be used at a later time.

To perform a Page Erase with the standard page size (256 bytes), an opcode of 81h must be clocked into the device followed by three address bytes comprised of:

Byte 0: 81h the page erase command code.

Byte 1: XXXX XX, PA9, PA8; which is six (6) dummy bits and two (2) page address bits.

Byte 2: PA<7:0>; which is eight (8) page address bits.

Byte 3: XXXX XXXX; which is eight (8) dummy bits.

When a low-to-high transition occurs on the $\overline{CS}$ pin, the device erases the selected page (the erased state is a Logic 1). The erase operation is internally self-timed and should take place in a maximum time of t_{PE}. During this time, the RDY/BUSY bit in the Status Register indicates that the device is busy.

The device also incorporates an intelligent erase algorithm that can detect when a byte location fails to erase properly. If an erase error arises, it is indicated by the EPE bit in the Status Register.

© 2023 Renesas Electronics

8.5 Block Erase

A block of 4, 32, or 64 kBytes can be erased (all bits set to the logical 1 state) in a single operation by using one of three different opcodes for the Block Erase command. An opcode of 20h is used for a 4-kByte erase, an opcode of 52h for a 32-kByte erase, and an opcode of D8h is used for a 64-kByte erase. Before a Block Erase command can be started, the Write Enable command must have been previously issued to the device to set the WEL bit of the Status Register to a logical 1 state.

To perform a Block Erase, the $\overline{CS}$ pin must first be asserted and the appropriate opcode (20h, 52h, or D8h) must be clocked into the device. After the opcode has been clocked in, the three address bytes specifying an address within the 4-, 32-, or 64-kByte block to be erased must be clocked in. Any additional data clocked into the device is ignored. When the $\overline{CS}$ pin is deasserted, the device erases the appropriate block. The erasing of the block is internally self-timed and takes place in a time of t_{BLKE}.

Since the Block Erase command erases a region of bytes, the lower order address bits do not need to be decoded by the device. Thus, for a 4-kByte erase, address bits A11-A0 are ignored by the device and their values can be either a logical 1 or 0. For a 32-kByte erase, address bits A14-A0 are ignored by the device. For a 64-kByte erase, address bits A15-A0 are ignored by the device. Despite the lower order address bits not being decoded by the device, the complete three address bytes must still be clocked into the device before the $\overline{CS}$ pin is deasserted, and the $\overline{CS}$ pin must be deasserted on an even byte boundary (multiples of eight bits); otherwise, the device stops the operation and no erase operation is performed.

If the memory is in the protected state, then the Block Erase command is not executed, and the device returns to the idle state once the $\overline{CS}$ pin has been deasserted.

The WEL bit in the Status Register is reset back to the logical 0 state if the erase cycle stops due to an incomplete address being sent, the $\overline{CS}$ pin being deasserted on uneven byte boundaries, or because a memory location within the region to be erased is protected.

While the device is executing a successful erase cycle, the Status Register can be read and indicates that the device is busy. For faster throughput, it is recommended that the Status Register be polled rather than waiting the t_{BLKE} time to determine if the device has finished erasing. At some point before the erase cycle completes, the WEL bit in the Status Register is reset back to the logical 0 state.

For fastest throughput and least power consumption, it is recommended that the Active Status Interrupt command 25h be used. After the initial 16 clocks, no more clocks are required. Once the BUSY cycle is done, SO is driven low immediately to signal the device has finished erasing.

The device also incorporates an intelligent erase algorithm that can detect when a byte location fails to erase properly. If an erase error occurs, it is indicated by the EPE bit in the Status Register.

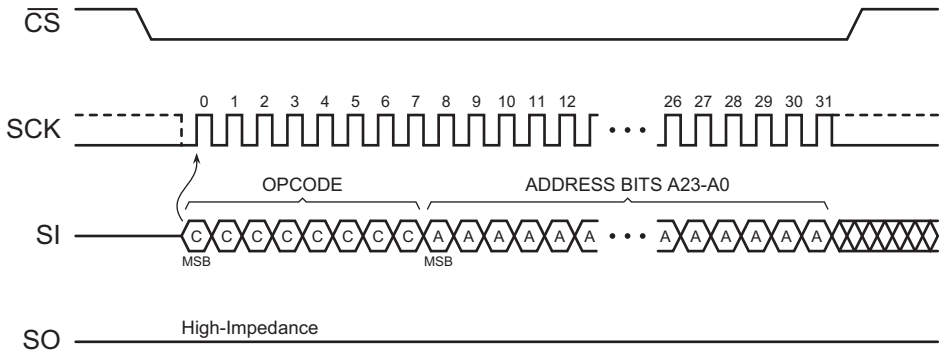

Figure 17. Block Erase

© 2023 Renesas Electronics

8.6 Chip Erase

The entire memory array can be erased in a single operation by using the Chip Erase command. Before a Chip Erase command can be started, the Write Enable command must have been previously issued to the device to set the WEL bit of the Status Register to a logical 1 state.

Two opcodes (60h and C7h) can be used for the Chip Erase command. There is no difference in device functionality when utilizing the two opcodes, so they can be used interchangeably. To perform a Chip Erase, one of the two opcodes must be clocked into the device. Since the entire memory array is to be erased, no address bytes are required to be clocked into the device, and any data clocked in after the opcode is ignored. When the $\overline{CS}$ pin is deasserted, the device erases the entire memory array. The erasing of the device is internally self-timed and takes place in a time of t_{CHPE}.

The complete opcode must be clocked into the device before the $\overline{CS}$ pin is deasserted, and the $\overline{CS}$ pin must be deasserted on an even byte boundary (multiples of eight bits); otherwise, no erase is performed. Also, if any sector in the memory array is in the protected state, then the Chip Erase command is not executed, and the device returns to the idle state once the $\overline{CS}$ pin has been deasserted. The WEL bit in the Status Register is reset back to the logical 0 state if the $\overline{CS}$ pin is deasserted on uneven byte boundaries or if the memory is in the protected state.

While the device is executing a successful erase cycle, the Status Register can be read and indicates that the device is busy. For faster throughput, it is recommended that the Status Register be polled rather than waiting the t_{CHPE} time to determine if the device has finished erasing. At some point before the erase cycle completes, the WEL bit in the Status Register is reset back to the logical 0 state.

The device also incorporates an intelligent erase algorithm that can detect when a byte location fails to erase properly. If an erase error occurs, it is indicated by the EPE bit in the Status Register.

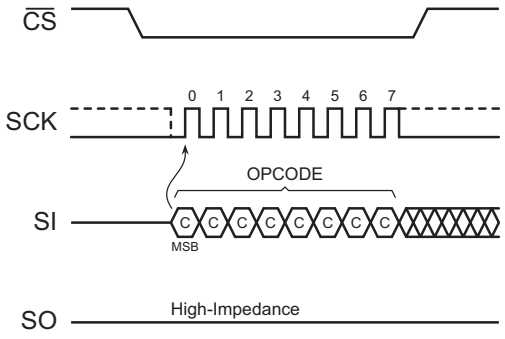

Figure 18. Chip Erase

© 2023 Renesas Electronics

9. Protection Commands and Features

9.1 Write Enable

The Write Enable command is used to set the Write Enable Latch (WEL) bit in the Status Register to a logical 1 state. The WEL bit must be set before a Byte/Page Program, Erase, Program OTP Security Register, or Write Status Register command can be executed. This makes the issuance of these commands a two step process, thereby reducing the chances of a command being accidentally or erroneously executed. If the WEL bit in the Status Register is not set prior to the issuance of one of these commands, then the command is not executed.

To issue the Write Enable command, the $\overline{CS}$ pin must first be asserted and the opcode of 06h must be clocked into the device. No address bytes are required to be clocked into the device, and any data clocked in after the opcode is ignored. When the $\overline{CS}$ pin is deasserted, the WEL bit in the Status Register is set to a logical 1. The complete opcode must be clocked into the device before the $\overline{CS}$ pin is deasserted, and the $\overline{CS}$ pin must be deasserted on an even byte boundary (multiples of eight bits); otherwise, the device stops the operation and the state of the WEL bit does not change.

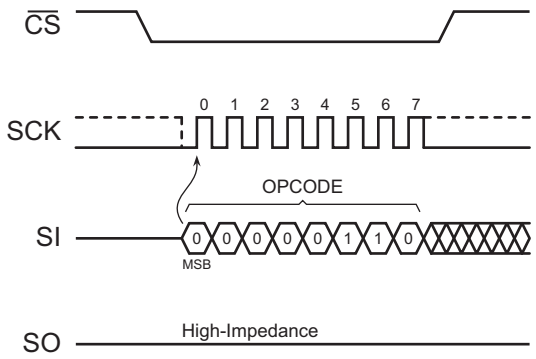

Figure 19. Write Enable

9.2 Write Disable

The Write Disable command is used to reset the Write Enable Latch (WEL) bit in the Status Register to the logical 0 state. With the WEL bit reset, all Byte/Page Program, Erase, Program OTP Security Register, and Write Status Register commands is not executed. Other conditions can also cause the WEL bit to be reset; for more details, refer to the WEL bit section of the Status Register description.

To issue the Write Disable command, the $\overline{CS}$ pin must first be asserted and the opcode of 04h must be clocked into the device. No address bytes are required to be clocked into the device, and any data clocked in after the opcode is ignored. When the $\overline{CS}$ pin is deasserted, the WEL bit in the Status Register is reset to a logical 0. The complete opcode must be clocked into the device before the $\overline{CS}$ pin is deasserted, and the $\overline{CS}$ pin must be deasserted on an even byte boundary (multiples of eight bits); otherwise, the device stops the operation and the state of the WEL bit does not change.

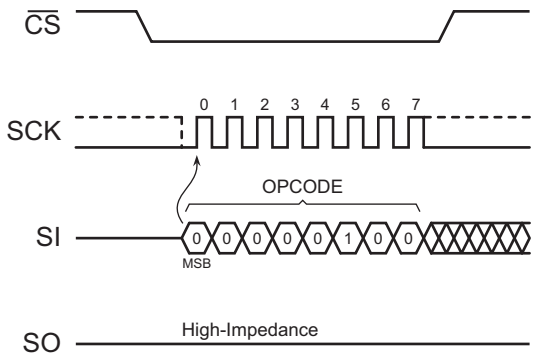

Figure 20. Write Disable

© 2023 Renesas Electronics

9.3 Protect Sector

Every physical sector of the device has a corresponding single-bit Sector Protection Register that is used to control the software protection of a sector. Upon device power-up or after a device reset, each Sector Protection Register defaults to the logical 1 state indicating that all sectors are protected and cannot be programmed or erased.

Issuing the Protect Sector command to a particular sector address sets the corresponding Sector Protection Register to the logical 1 state. The following table outlines the two states of the Sector Protection Registers.

Table 3. Sector Protection Register Values

Value	Sector Protection Status
0	Sector is unprotected and can be programmed and erased.
1	Sector is protected and cannot be programmed or erased. This is the default state.

Before the Protect Sector command can be issued, the Write Enable command must have been previously issued to set the WEL bit in the Status Register to a logical 1. To issue the Protect Sector command, the $\overline{CS}$ pin must first be asserted and the opcode of 36h must be clocked into the device followed by three address bytes designating any address within the sector to be protected. Any additional data clocked into the device is ignored. When the $\overline{CS}$ pin is deasserted, the Sector Protection Register corresponding to the physical sector addressed by A23 - A0 is set to the logical 1 state, and the sector itself is then protected from program and erase operations. Also, the WEL bit in the Status Register is reset back to the logical 0 state.

The complete three address bytes must be clocked into the device before the $\overline{CS}$ pin is deasserted, and the $\overline{CS}$ pin must be deasserted on an even byte boundary (multiples of eight bits); otherwise, the device stops the operation, the state of the Sector Protection Register is unchanged, and the WEL bit in the Status Register is reset to a logical 0.

As a safeguard against accidental or erroneous protecting or unprotecting of sectors, the Sector Protection Registers can themselves be locked from updates by using the SPRL (Sector Protection Registers Locked) bit of the Status Register (see the Status Register description for more details). If the Sector Protection Registers are locked, then any attempts to issue the Protect Sector command is ignored, and the device resets the WEL bit in the Status Register back to a logical 0 and return to the idle state once the $\overline{CS}$ pin has been deasserted.

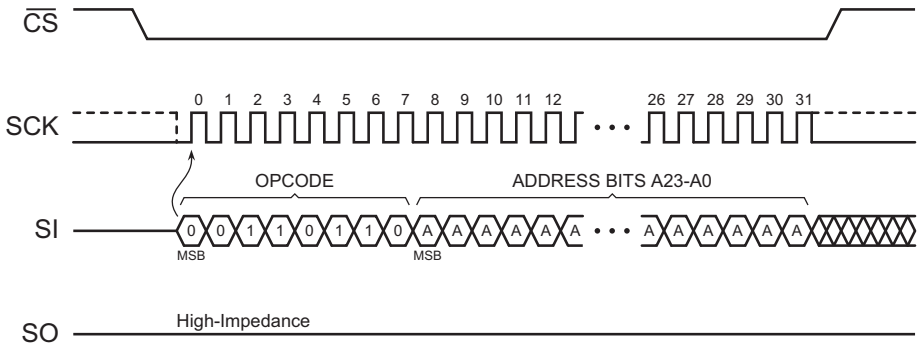

Figure 21. Protect Sector

© 2023 Renesas Electronics

9.4 Unprotect Sector

Issuing the Unprotect Sector command to a particular sector address resets the corresponding Sector Protection Register to the logical 0 state (see Table 3 for Sector Protection Register values). Every physical sector of the device has a corresponding single-bit Sector Protection Register that is used to control the software protection of a sector.

Before the Unprotect Sector command can be issued, the Write Enable command must have been previously issued to set the WEL bit in the Status Register to a logical 1. To issue the Unprotect Sector command, the $\overline{CS}$ pin must first be asserted and the opcode of 39h must be clocked into the device. After the opcode has been clocked in, the three address bytes designating any address within the sector to be unlocked must be clocked in. Any additional data clocked into the device after the address bytes are ignored. When the $\overline{CS}$ pin is deasserted, the Sector Protection Register corresponding to the sector addressed by A23 - A0 is reset to the logical 0 state, and the sector itself is unprotected. Also, the WEL bit in the Status Register is reset back to the logical 0 state.

The complete three address bytes must be clocked into the device before the $\overline{CS}$ pin is deasserted, and the $\overline{CS}$ pin must be deasserted on an even byte boundary (multiples of eight bits); otherwise, the device stops the operation, the state of the Sector Protection Register is unchanged, and the WEL bit in the Status Register is reset to a logical 0.

As a safeguard against accidental or erroneous locking or unlocking of sectors, the Sector Protection Registers can themselves be locked from updates by using the SPRL (Sector Protection Registers Locked) bit of the Status Register (see the Status Register description for more details). If the Sector Protection Registers are locked, then any attempts to issue the Unprotect Sector command is ignored, and the device resets the WEL bit in the Status Register back to a logical 0 and return to the idle state once the $\overline{CS}$ pin has been deasserted.

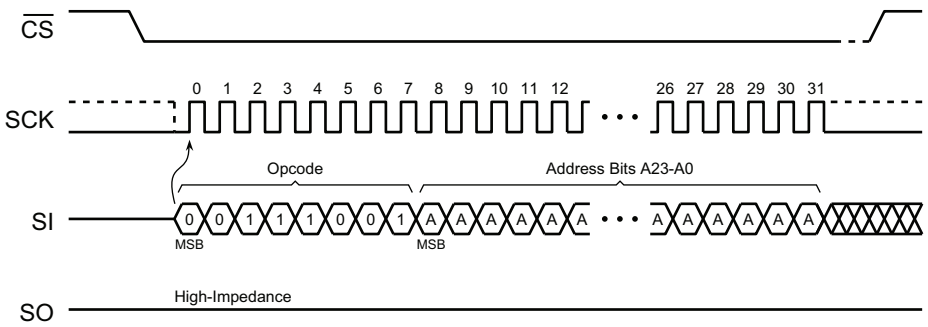

Figure 22. Unprotect Sector

9.5 Global Protect/Unprotect

The Global Protect and Global Unprotect features can work in conjunction with the Protect Sector and Unprotect Sector functions. For example, a system can globally protect the entire memory array and then use the Unprotect Sector command to individually unprotect certain sectors and individually reprotect them later by using the Protect Sector command. Likewise, a system can globally unprotect the entire memory array and then individually protect certain sectors, as required.

Performing a Global Protect or Global Unprotect is done by writing a certain combination of data to the Status Register using the Write Status Register command (see "Write Status Register" on page 35 for command execution details). The Write Status Register command is also used to modify the SPRL (Sector Protection Registers Locked) bit to control hardware and software locking.

To perform a Global Protect, the appropriate $\overline{WP}$ pin and SPRL conditions must be met, and the system must write a logical 1 to bits 5, 4, 3, and 2 of the Status Register. Conversely, to perform a Global Unprotect, the same $\overline{WP}$ and SPRL conditions must be met but the system must write a logical 0 to bits 5, 4, 3, and 2 of the Status Register. Table 4 details the conditions necessary for a Global Protect or Global Unprotect to be performed.

© 2023 Renesas Electronics

Table 4. Valid SPRL and Global Protect/Unprotect Conditions

$\overline{WP}$ State	Current SPRL Value	New Write Status Register Data Bit 7 6 5 4 3 2 1 0	Protection Operation	New SPRL Value
0	0	0 x 0 0 0 0 x x	Global Unprotect – all Sector Protection Registers reset to 0	0
		0 x 0 0 0 1 x x	No change to current protection.	0
		?	No change to current protection.	0
		0 x 1 1 1 0 x x	No change to current protection.	0
		0 x 1 1 1 1 x x	Global Protect – all Sector Protection Registers set to 1	0
		1 x 0 0 0 0 x x	Global Unprotect – all Sector Protection Registers reset to 0	1
		1 x 0 0 0 1 x x	No change to current protection.	1
		?	No change to current protection.	1
		1 x 1 1 1 0 x x	No change to current protection.	1
		1 x 1 1 1 1 x x	Global Protect – all Sector Protection Registers set to 1	1
0	1	x x x x x x x x	No change to the current protection level. All sectors currently protected remain protected and all sectors currently unprotected remain unprotected. The Sector Protection Registers are hard-locked and cannot be changed when the $\overline{WP}$ pin is LOW and the current state of SPRL is 1. Thus, a Global Protect/Unprotect does not occur. Also, the SPRL bit cannot be changed (the $\overline{WP}$ pin must be HIGH in order to change SPRL back to a 0).	
1	0	0 x 0 0 0 0 x x	Global Unprotect – all Sector Protection Registers reset to 0	0
		0 x 0 0 0 1 x x	No change to current protection.	0
		?	No change to current protection.	0
		0 x 1 1 1 0 x x	No change to current protection.	0
		0 x 1 1 1 1 x x	Global Protect – all Sector Protection Registers set to 1	0
		1 x 0 0 0 0 x x	Global Unprotect – all Sector Protection Registers reset to 0	1
		1 x 0 0 0 1 x x	No change to current protection.	1
		?	No change to current protection.	1
		1 x 1 1 1 0 x x	No change to current protection.	1
		1 x 1 1 1 1 x x	Global Protect – all Sector Protection Registers set to 1	1
1	1	0 x 0 0 0 0 x x	No change to the current protection level. All sectors currently protected remain protected, and all sectors currently unprotected remain unprotected.	0
		0 x 0 0 0 1 x x		0
		?		0
		0 x 1 1 1 0 x x		0
		0 x 1 1 1 1 x x	The Sector Protection Registers are soft-locked and cannot be changed when the current state of SPRL is 1. Thus, a Global Protect/Unprotect does not occur. However, the SPRL bit can be changed back to a 0 from a 1 since the $\overline{WP}$ pin is HIGH. To perform a Global Protect/Unprotect, the Write Status Register command must be issued again after the SPRL bit has been changed from a 1 to a 0.	0
		1 x 0 0 0 0 x x		1
		1 x 0 0 0 1 x x		1
		?		1
		1 x 1 1 1 0 x x		1
		1 x 1 1 1 1 x x		1

Essentially, if the SPRL bit of the Status Register is in the logical 0 state (Sector Protection Registers are not locked), then writing a 00h to the Status Register performs a Global Unprotect without changing the state of the SPRL bit. Similarly, writing a 7Fh to the Status Register performs a Global Protect and keep the SPRL bit in the logical 0 state. The SPRL bit can, of course, be changed to a logical 1 by writing an FFh if software-locking or hardware-locking is desired along with the Global Protect.

If the desire is to only change the SPRL bit without performing a Global Protect or Global Unprotect, then the system can simply write a 0Fh to the Status Register to change the SPRL bit from a logical 1 to a logical 0 provided the $\overline{WP}$ pin is deasserted. Likewise, the system can write an F0h to change the SPRL bit from a logical 0

© 2023 Renesas Electronics

to a logical 1 without affecting the current sector protection status (no changes are made to the Sector Protection Registers).

When writing to the Status Register, bits 5, 4, 3, and 2 are not actually modified but are decoded by the device for the purposes of the Global Protect and Global Unprotect functions. Only bit 7, the SPRL bit, is modified. Thus, when reading the Status Register, bits 5, 4, 3, and 2 do not reflect the values written to them but instead indicate the status of the $\overline{WP}$ pin and the sector protection status. See the "Read Status Register" section and Table 9 on page 31 for details on the Status Register format and what values can be read for bits 5, 4, 3, and 2.

9.6 Read Sector Protection Registers

The Sector Protection Registers can be read to determine the current software protection status of each sector. Reading the Sector Protection Registers, however, does not determine the status of the $\overline{WP}$ pin.

To read the Sector Protection Register for a particular sector, the $\overline{CS}$ pin must first be asserted and the opcode of 3Ch must be clocked in. Once the opcode has been clocked in, three address bytes designating any address within the sector must be clocked in. After the last address byte has been clocked in, the device begins outputting data on the SO pin during every subsequent clock cycle. The data being output are a repeating byte of either FFh or 00h to denote the value of the appropriate Sector Protection Register.

Table 5. Read Sector Protection Register – Output Data

Output Data	Sector Protection Register Value
00h	Sector Protection Register value is 0 (sector is unprotected).
FFh	Sector Protection Register value is 1 (sector is protected).

Deasserting the $\overline{CS}$ pin stops the read operation and put the SO pin into a high-impedance state. The $\overline{CS}$ pin can be deasserted at any time and does not require that a full byte of data be read.

In addition to reading the individual Sector Protection Registers, the Software Protection Status (SWP) bit in the Status Register can be read to determine if all, some, or none of the sectors are software protected (refer to the "Status Register Commands" on page 31 for more details).

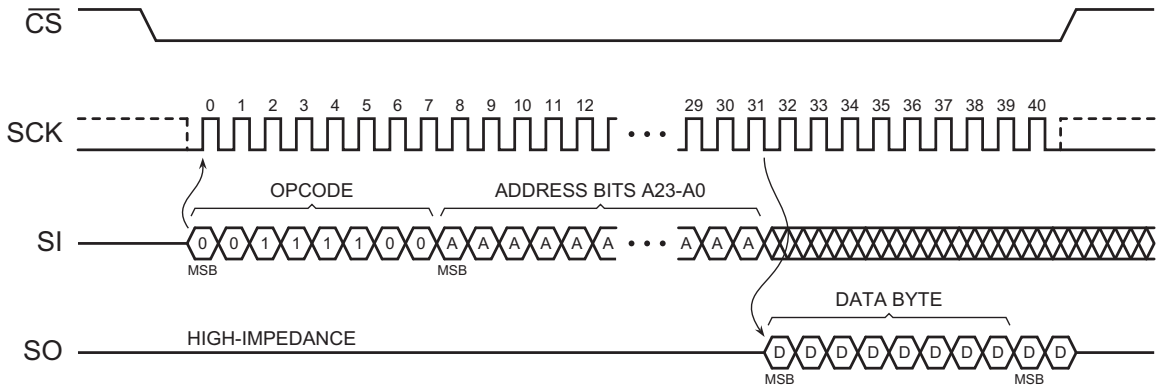

Figure 23. Read Sector Protection Register

© 2023 Renesas Electronics

9.7 Protected States and the Write Protect ($\overline{WP}$) Pin

The $\overline{WP}$ pin is not linked to the memory array itself and has no direct effect on the protection status of the memory array. Instead, the $\overline{WP}$ pin, in conjunction with the SPRL (Sector Protection Registers Locked) bit in the Status Register, is used to control the hardware locking mechanism of the device. For hardware locking to be active, two conditions must be met – the $\overline{WP}$ pin must be asserted and the SPRL bit must be in the logical 1 state.

When hardware locking is active, the Sector Protection Registers are locked and the SPRL bit itself is also locked. Thus, sectors that are protected are locked in the protected state, and sectors that are unprotected are locked in the unprotected state. These states cannot be changed as long as hardware locking is active, so the Protect Sector, Unprotect Sector, and Write Status Register commands are ignored. In order to modify the protection status of a sector, the $\overline{WP}$ pin must first be deasserted, and the SPRL bit in the Status Register must be reset back to the logical 0 state using the Write Status Register command. When resetting the SPRL bit back to a logical 0, it is not possible to perform a Global Protect or Global Unprotect at the same time since the Sector Protection Registers remain soft-locked until after the Write Status Register command has been executed.

If the $\overline{WP}$ pin is permanently connected to GND, then once the SPRL bit is set to a logical 1, the only way to reset the bit back to the logical 0 state is to power-cycle or reset the device. This allows a system to power-up with all sectors software protected but not hardware locked. Thus, sectors can be unprotected and protected, as required, and then hardware locked at a later time, by simply setting the SPRL bit in the Status Register.

When the $\overline{WP}$ pin is deasserted, or if the $\overline{WP}$ pin is permanently connected to VCC, the SPRL bit in the Status Register can still be set to a logical 1 to lock the Sector Protection Registers. This provides a software locking ability to prevent erroneous Protect Sector or Unprotect Sector commands from being processed. When changing the SPRL bit to a logical 1 from a logical 0, it is also possible to perform a Global Protect or Global Unprotect at the same time by writing the appropriate values into bits 5, 4, 3, and 2 of the Status Register.

Tables 6 and 7 detail the various protection and locking states of the device.

Table 6. Sector Protection Register States

$\overline{WP}$	Sector Protection Register n[1]	Sector n(1)
X (Don't Care)	0	Unprotected
	1	Protected

1. “n” represents a sector number

Table 7. Hardware and Software Locking

$\overline{WP}$	SPRL	Locking	SPRL Change Allowed	Sector Protection Registers
0	0		Can be modified from 0 to 1	Unlocked and modifiable using the Protect and Unprotect Sector commands. Global Protect and Unprotect can also be performed.
0	1	Hardware Locked	Locked	Locked in current state. Protect and Unprotect Sector commands are ignored. Global Protect and Unprotect cannot be performed.
1	0		Can be modified from 0 to 1	Unlocked and modifiable using the Protect and Unprotect Sector commands. Global Protect and Unprotect can also be performed.
1	1	Software Locked	Can be modified from 1 to 0	Locked in current state. Protect and Unprotect Sector commands are ignored. Global Protect and Unprotect cannot be performed.

© 2023 Renesas Electronics

10. Security Commands

10.1 Program OTP Security Register

The device contains a specialized OTP (One-Time Programmable) Security Register that can be used for purposes such as unique device serialization, system-level Electronic Serial Number (ESN) storage, locked key storage, etc. The OTP Security Register is independent of the main Flash memory array and is comprised of a total of 128 bytes of memory divided into two portions. The first 64 bytes (byte locations 0 through 63) of the OTP Security Register are allocated as a one-time user-programmable space. Once these 64 bytes have been programmed, they cannot be erased or reprogrammed. The remaining 64 bytes of the OTP Security Register (byte locations 64 through 127) are factory programmed by Renesas Electronics and contain a unique value for each device. The factory programmed data is fixed and cannot be changed

Table 8. OTP Security Register

Security Register Byte Number									
0	1	. . .	62	63	64	65	. . .	126	127
One-Time User Programmable					Factory Programmed by Renesas Electronics				

The user-programmable portion of the OTP Security Register does not need to be erased before it is programmed. Also, the Program OTP Security Register command operates on the entire 64-byte user-programmable portion of the OTP Security Register at one time. Once the user-programmable space has been programmed with any number of bytes, the user-programmable space cannot be programmed again; thus, it is not possible to only program the first two bytes of the register and then program the remaining 62 bytes at a later time.

Before the Program OTP Security Register command can be issued, the Write Enable command must have been previously issued to set the WEL bit in the Status Register to a logical 1. To program the OTP Security Register, the $\overline{CS}$ pin must first be asserted and an opcode of 9Bh must be clocked into the device followed by the three address bytes denoting the first byte location of the OTP Security Register to begin programming at. Since the size of the user-programmable portion of the OTP Security Register is 64 bytes, the upper-order address bits do not need to be decoded by the device. Thus, address bits A23-A6 are ignored by the device and their values can be either a logical 1 or 0. After the address bytes have been clocked in, data can then be clocked into the device and are stored in the internal buffer.

If the starting memory address denoted by A23-A0 does not start at the beginning of the OTP Security Register memory space (A5-A0 are not all 0), then special circumstances regarding which OTP Security Register locations to be programmed apply. In this situation, any data that is sent to the device that goes beyond the end of the 64-byte user-programmable space wraps around back to the beginning of the OTP Security Register. For example, if the starting address denoted by A23-A0 is 00003Eh, and three bytes of data are sent to the device, then the first two bytes of data are programmed at OTP Security Register addresses 00003Eh and 00003Fh while the last byte of data are programmed at address 000000h. The remaining bytes in the OTP Security Register (addresses 000001h through 00003Dh) are not programmed and remain in the erased state (FFh). Also, if more than 64 bytes of data are sent to the device, then only the last 64 bytes sent are latched into the internal buffer.

When the $\overline{CS}$ pin is deasserted, the device takes the data stored in the internal buffer and program it into the appropriate OTP Security Register locations based on the starting address specified by A23-A0 and the number of data bytes sent to the device. If less than 64 bytes of data were sent to the device, then the remaining bytes within the OTP Security Register are not programmed and remain in the erased state (FFh). The programming of the data bytes is internally self-timed and takes place in a time of t_{OTPP}.

The three address bytes and at least one complete byte of data must be clocked into the device before the $\overline{CS}$ pin is deasserted, and the $\overline{CS}$ pin must be deasserted on even byte boundaries (multiples of eight bits); otherwise, the device stops the operation and the user-programmable portion of the OTP Security Register is not programmed. The WEL bit in the Status Register is reset back to the logical 0 state if the OTP Security Register program cycle stops due to an incomplete address being sent, an incomplete byte of data being sent, the $\overline{CS}$ pin being

© 2023 Renesas Electronics

deasserted on uneven byte boundaries, or because the user-programmable portion of the OTP Security Register was previously programmed.

While the device is programming the OTP Security Register, the Status Register can be read and indicates that the device is busy. For faster throughput, it is recommended that the Status Register be polled rather than waiting the t_{OTPP} time to determine if the data bytes have finished programming. At some point before the OTP Security Register programming completes, the WEL bit in the Status Register is reset back to the logical 0 state.

If the device is powered-down during the OTP Security Register program cycle, then the contents of the 64-byte user programmable portion of the OTP Security Register cannot be guaranteed and cannot be programmed again.

The Program OTP Security Register command uses the internal 256-buffer for processing. Thus, the contents of the buffer is altered from its previous state when this command is issued.

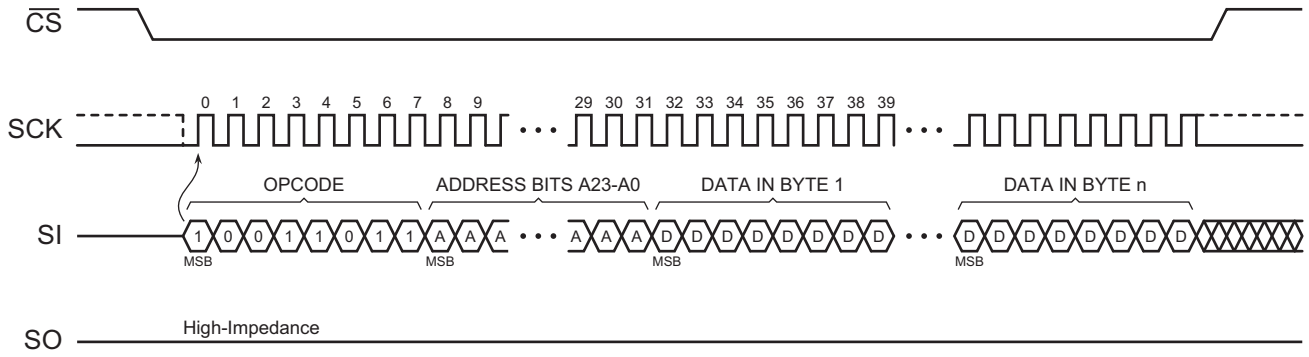

Figure 24. Program OTP Security Register

10.2 Read OTP Security Register

The OTP Security Register can be sequentially read in a similar fashion to the Read Array operation up to the maximum clock frequency specified by f_{CLK}. To read the OTP Security Register, the $\overline{CS}$ pin must first be asserted and the opcode of 77h must be clocked into the device. After the opcode has been clocked in, the three address bytes must be clocked in to specify the starting address location of the first byte to read within the OTP Security Register. Following the three address bytes, two dummy bytes must be clocked into the device before data can be output.

After the three address bytes and the dummy bytes have been clocked in, additional clock cycles result in OTP Security Register data being output on the SO pin. When the last byte (03FFFFh) of the OTP Security Register has been read, the device continues reading back at the beginning of the register (000000h). No delays are incurred when wrapping around from the end of the register to the beginning of the register.

Deasserting the $\overline{CS}$ pin stops the read operation and put the SO pin into a high-impedance state. The $\overline{CS}$ pin can be deasserted at any time and does not require that a full byte of data be read.

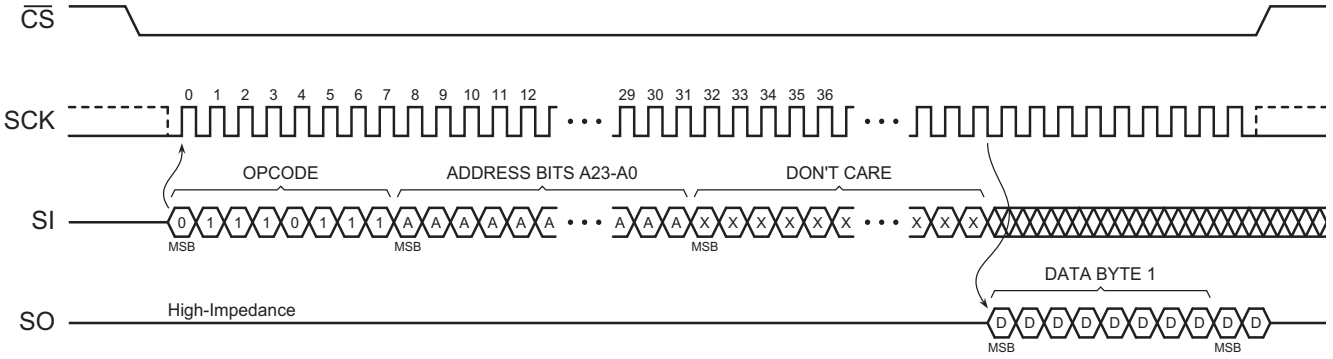

Figure 25. Read OTP Security Register

© 2023 Renesas Electronics

11. Status Register Commands

11.1 Read Status Register

The Status Register can be read to determine the device's ready/busy status, as well as the status of many other functions such as Hardware Locking and Software Protection. The Status Register can be read at any time, including during an internally self-timed program or erase operation.The Status Register consists of two bytes.

To read the Status Register, the $\overline{CS}$ pin must first be asserted and the opcode of 05h must be clocked into the device. After the opcode has been clocked in, the device begins outputting Status Register data on the SO pin during every subsequent clock cycle. After the last bit (bit 0) of Status Register Byte 2 has been clocked out, the sequence repeats itself, starting again with bit 7 of Status Register Byte 1, as long as the $\overline{CS}$ pin remains asserted and the clock pin is being pulsed. The data in the Status Register is constantly being updated, so each repeating sequence outputs new data.

Deasserting the $\overline{CS}$ pin stops the Read Status Register operation and put the SO pin into a high-impedance state. The $\overline{CS}$ pin can be deasserted at any time and does not require that a full byte of data be read.

Table 9. Status Register Format

Bit[1]	Name		Type[2]	Description	
7	SPRL	Sector Protection Registers Locked	R/W	0	Sector Protection Registers are unlocked (default).
				1	Sector Protection Registers are locked.
6	SPM	Sequential Program Mode Status	R	0	Byte/Page Programming Mode (default).
				1	Sequential Programming Mode entered.
5	EPE	Erase/Program Error	R	0	Erase or program operation was successful.
				1	Erase or program error detected.
4	WPP	Write Protect ($\overline{WP}$) Pin Status	R	0	$\overline{WP}$ is asserted.
				1	$\overline{WP}$ is deasserted.
3:2	SWP	Software Protection Status	R	00	All sectors are software unprotected (all Sector Protection Registers are 0).
				01	Some sectors are software protected. Read individual Sector Protection Registers to determine which sectors are protected.
				10	*Reserved for future use.*
				11	All sectors are software protected (all Sector Protection Registers are 1 – default).
1	WEL	Write Enable Latch Status	R	0	Device is not write enabled (default).
				1	Device is write enabled.
0	$\overline{RDY}$/BSY	Ready/Busy Status	R	0	Device is ready.
				1	Device is busy with an internal operation.

1. Only bit 7 of the Status Register are modified when using the Write Status Register command.
2. R/W = Readable and writable
   R = Readable only

11.1.1 SPRL Bit

The SPRL bit is used to control whether the Sector Protection Registers can be modified or not. When the SPRL bit is in the logical 1 state, all Sector Protection Registers are locked and cannot be modified with the Protect Sector and Unprotect Sector commands (the device ignores these commands). Also, the Global Protect and Global Unprotect features cannot be performed. Any sectors that are presently protected remain protected, and any sectors that are presently unprotected remain unprotected.

© 2023 Renesas Electronics

When the SPRL bit is in the logical 0 state, all Sector Protection Registers are unlocked and can be modified (the Protect Sector and Unprotect Sector commands, as well as the Global Protect and Global Unprotect features, are processed as normal). The SPRL bit defaults to the logical 0 state after a power-up or a device reset.

The SPRL bit can be modified freely whenever the $\overline{WP}$ pin is deasserted. However, if the $\overline{WP}$ pin is asserted, then the SPRL bit can only be changed from a logical 0 (Sector Protection Registers are unlocked) to a logical 1 (Sector Protection Registers are locked). In order to reset the SPRL bit back to a logical 0 using the Write Status Register command, the $\overline{WP}$ pin has to first be deasserted.The SPRL bit is the only bit of the Status Register that can be user modified through the Write Status Register command.

11.1.2 SPM Bit

The SPM bit indicates whether the device is in the Byte/Page Program mode or the Sequential Program Mode. The default state after power-up or device reset is the Byte/Page Program mode.

11.1.3 EPE Bit

The EPE bit indicates whether the last erase or program operation completed successfully or not. If at least one byte during the erase or program operation did not erase or program properly, then the EPE bit is set to the logical 1 state. The EPE bit is not set if an erase or program operation stops for any reason such as an attempt to erase or program a protected region or if the WEL bit is not set prior to an erase or program operation. The EPE bit is updated after every erase and program operation.

11.1.4 WPP Bit

The WPP bit can be read to determine if the $\overline{WP}$ pin has been asserted or not.

11.1.5 SWP Bits

The SWP bits provide feedback on the software protection status for the device. There are three possible combinations of the SWP bits that indicate whether none, some, or all of the sectors have been protected using the Protect Sector command or the Global Protect feature. If the SWP bits indicate that some of the sectors have been protected, then the individual Sector Protection Registers can be read with the Read Sector Protection Registers command to determine which sectors are in fact protected.

11.1.6 WEL Bit

The WEL bit indicates the current status of the internal Write Enable Latch. When the WEL bit is in the logical 0 state, the device does not accept any program, erase, Protect Sector, Unprotect Sector, or Write Status Register commands. The WEL bit defaults to the logical 0 state after a device power-up or reset. Also, the WEL bit is reset to the logical 0 state automatically under the following conditions:

- Write Disable operation completes successfully
- Write Status Register operation completes successfully or stops
- Protect Sector operation completes successfully or stops
- Unprotect Sector operation completes successfully or stops
- Byte/Page Program operation completes successfully or stops
- Sequential Program Mode reaches highest unprotected memory location
- Sequential Program Mode reaches the end of the memory array
- Sequential Program Mode stops
- Block Erase operation completes successfully or stops
- Chip Erase operation completes successfully or stops
- Hold condition stops

If the WEL bit is in the logical 1 state, it is not reset to a logical 0 if an operation stops due to an incomplete or unrecognized opcode being clocked into the device before the $\overline{CS}$ pin is deasserted. In order for the WEL bit to be

© 2023 Renesas Electronics

reset when an operation stops prematurely, the entire opcode for a program, erase, Protect Sector, Unprotect Sector, or Write Status Register command must have been clocked into the device.

11.1.7 $\overline{\text{RDY}}$/BSY Bit

The $\overline{\text{RDY}}$/BSY bit is used to determine whether or not an internal operation, such as a program or erase, is in progress. To poll the $\overline{\text{RDY}}$/BSY bit to detect the completion of a program or erase cycle, new Status Register data must be continually clocked out of the device until the state of the $\overline{\text{RDY}}$/BSY bit changes from a logical 1 to a logical 0.Note that the $\overline{\text{RDY}}$/BSY bit can be read either from Status Register Byte 1 or from Status Register Byte 2. See also the Active Status Interrupt command. (11.2)

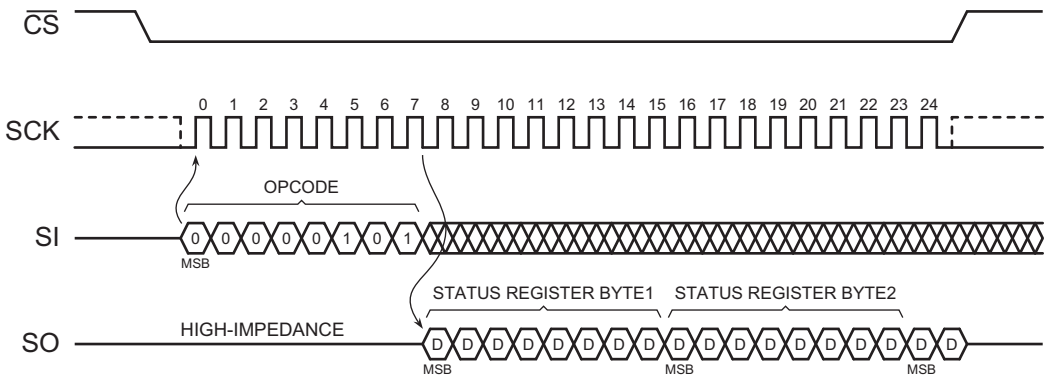

Figure 26. Read Status Register

11.1.8 RSTE Bit

The RSTE bit is used to enable or disable the Reset command. When the RSTE bit is in the Logical 0 state (the default state after power-up), the Reset command is disabled and any attempts to reset the device using the Reset command is ignored. When the RSTE bit is in the Logical 1 state, the Reset command is enabled.

The RSTE bit retains its state as long as power is applied to the device. Once set to the Logical 1 state, the RSTE bit remains in that state until it is modified using the Write Status Register Byte 2 command or until the device has been power cycled. The Reset command itself does not change the state of the RSTE bit.

Table 10. Status Register Format – Byte 2

Bit[1]	Name		Type[2]	Description	
7	RES	Reserved for future use	R	0	Reserved for future use
6	RES	Reserved for future use	R	0	Reserved for future use
5	RES	Reserved for future use	R	0	Reserved for future use
4	RSTE	Reset Enabled	R/W	0	Reset command is disabled (default)
				1	Reset command is enabled
3	RES	Reserved for future use	R	0	Reserved for future use
2	RES	Reserved for future use	R	0	Reserved for future use
1	RES	Reserved for future use	R	0	Reserved for future use
0	$\overline{\text{RDY}}$/BSY	Ready/Busy Status	R	0	Device is ready
				1	Device is busy with an internal operation

1. Only bit 4 of Status Register Byte 2 is modified when using the Write Status Register Byte 2 command
2. R/W = Readable and Writeable, R = Readable only.

© 2023 Renesas Electronics

11.2 Active Status Interrupt

To simplify the readout of the $\overline{\text{RDY}}$/BSY bit, the Active Status Interrupt command (25h) can be used. It is then not necessary to continuously read the status register, it is sufficient to monitor the value of the SO line. If the SO line is connected to an interrupt line on the host controller, the host controller can be in sleep mode until the SO line indicates that the AT25DN021A is ready for the next command.

The $\overline{\text{RDY}}$/BSY bit can be read at any time, including during an internally self-timed program or erase operation.

To enable the Active Status Interrupt command, the $\overline{\text{CS}}$ pin must first be asserted and the opcode of 25h must be clocked into the device. For SPI Mode3, at least one dummy bit has to be clocked into the device after the last bit of the opcode has been clocked in. (In most cases, this is most easily done by sending a dummy byte to the device.) The value of the SI line after the opcode is clocked in is of no significance to the operation. For SPI Mode 0, this dummy bit (dummy byte) is not required.

The value of $\overline{\text{RDY}}$/BSY is then output on the SO line, and is continuously updated by the device for as long as the $\overline{\text{CS}}$ pin remains asserted. Additional clocks on the SCK pin are not required. If the $\overline{\text{RDY}}$/BSY bit changes from 1 to 0 while the $\overline{\text{CS}}$ pin is asserted, the SO line changes from 1 to 0. (The $\overline{\text{RDY}}$/BSY bit cannot change from 0 to 1 during an operation, so if the SO line already is 0, it does not change.)

Deasserting the $\overline{\text{CS}}$ pin stops the Active Status Interrupt operation and put the SO pin into a high-impedance state. The $\overline{\text{CS}}$ pin can be deasserted at any time and does not require that a full byte of data be read.

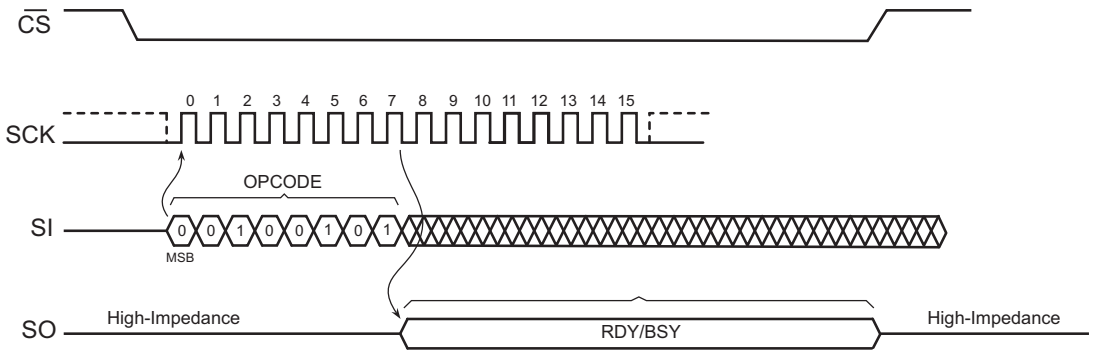

Figure 27. Active Status Interrupt

© 2023 Renesas Electronics

11.3 Write Status Register

The Write Status Register command is used to modify the SPRL bit of the Status Register and/or to perform a Global Protect or Global Unprotect operation. Before the Write Status Register command can be issued, the Write Enable command must have been previously issued to set the WEL bit in the Status Register to a logical 1.

To issue the Write Status Register command, the $\overline{CS}$ pin must first be asserted and the opcode of 01h must be clocked into the device followed by one byte of data. The one byte of data consists of the SPRL bit value, a don't care bit, four data bits to denote whether a Global Protect or Unprotect must be performed, and two additional don't care bits (see Table 11). Any additional data bytes that are sent to the device are ignored. When the $\overline{CS}$ pin is deasserted, the SPRL bit in the Status Register is modified, and the WEL bit in the Status Register is reset back to a logical 0. The values of bits 5, 4, 3, and 2 and the state of the SPRL bit before the Write Status Register command was executed (the prior state of the SPRL bit) determines whether or not a Global Protect or Global Unprotect is performed. See the "Global Protect/Unprotect" on page 25 for more details.

The complete one byte of data must be clocked into the device before the $\overline{CS}$ pin is deasserted; otherwise, the device stops the operation, the state of the SPRL bit does not change, no potential Global Protect or Unprotect is performed, and the WEL bit in the Status Register is reset back to the logical 0 state.

If the $\overline{WP}$ pin is asserted, then the SPRL bit can only be set to a logical 1. If an attempt is made to reset the SPRL bit to a logical 0 while the $\overline{WP}$ pin is asserted, then the Write Status Register command is ignored, and the WEL bit in the Status Register is reset back to the logical 0 state. In order to reset the SPRL bit to a logical 0, the $\overline{WP}$ pin must be deasserted.

Table 11. Write Status Register Format

Bit 7	Bit 6	Bit 5	Bit 4	Bit 3	Bit 2	Bit 1	Bit 0
SPRL	X	Global Protect/Unprotect				X	X

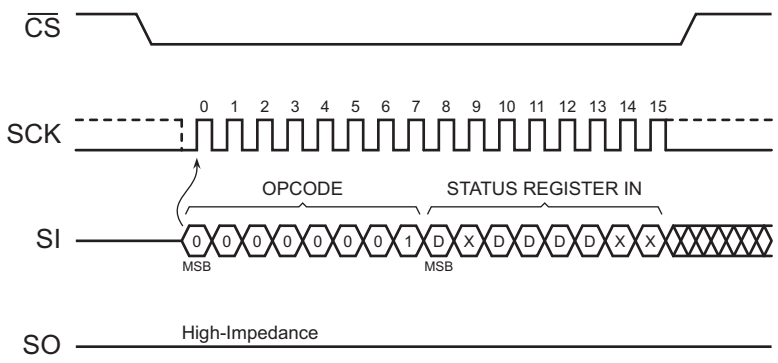

Figure 28. Write Status Register

© 2023 Renesas Electronics

11.4 Write Status Register Byte 2

The Write Status Register Byte 2 command is used to modify the RSTE. Using the Write Status Register Byte 2 command is the only way to modify the RSTE in the Status Register during normal device operation. Before the Write Status Register Byte 2 command can be issued, the Write Enable command must have been previously issued to set the WEL bit in the Status Register to a Logical 1.

To issue the Write Status Register Byte 2 command, the $\overline{CS}$ pin must first be asserted and then the opcode 31h must be clocked into the device followed by one byte of data. The one byte of data consists of three don't-care bits, the RSTE bit value, and four additional don't-care bits (see Table 12). Any additional data bytes sent to the device are ignored. When the $\overline{CS}$ pin is deasserted, the RSTE bit in the Status Register is modified, and the WEL bit in the Status Register is reset back to a Logical 0.

The complete one byte of data must be clocked into the device before the $\overline{CS}$ pin is deasserted, and the $\overline{CS}$ pin must be deasserted on even byte boundaries (multiples of eight bits); otherwise, the device stops the operation, the state of the RSTE bit does not change, and the WEL bit in the Status Register is reset back to the Logical 0 state.

Table 12. Write Status Register Byte 2 Format

Bit 7	Bit 6	Bit 5	Bit 4	Bit 3	Bit 2	Bit 1	Bit 0
X	X	X	RSTE	X	X	X	X

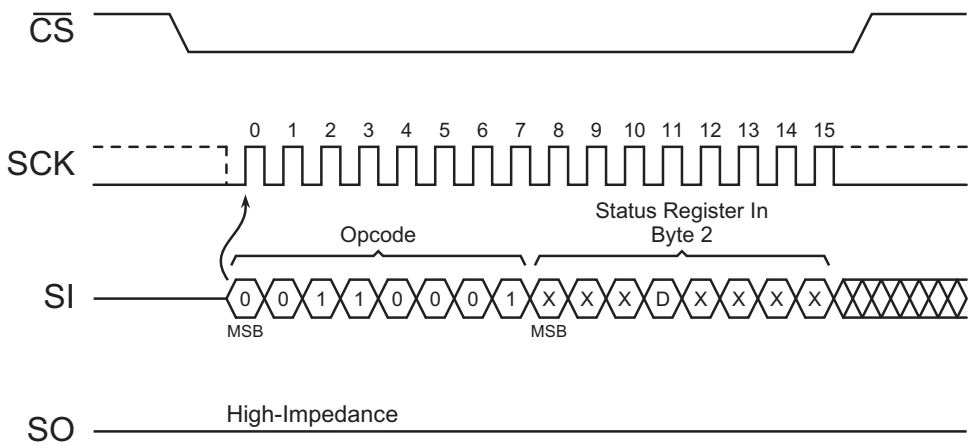

Figure 29. Write Status Register Byte 2

© 2023 Renesas Electronics

12. Other Commands and Functions

12.1 Read Manufacturer and Device ID

Identification information can be read from the device to enable systems to electronically query and identify the device while it is in system. The identification method and the command opcode comply with the JEDEC standard for “Manufacturer and Device ID Read Methodology for SPI Compatible Serial Interface Memory Devices”. The type of information that can be read from the device includes the JEDEC defined Manufacturer ID, the vendor specific Device ID, and the vendor specific Extended Device Information.

Since not all Flash devices are capable of operating at very high clock frequencies, applications must be designed to read the identification information from the devices at a reasonably low clock frequency to ensure all devices used in the application can be identified properly. Once the identification process is complete, the application can increase the clock frequency to accommodate specific Flash devices that are capable of operating at the higher clock frequencies.

To read the identification information, the $\overline{CS}$ pin must first be asserted and the opcode of 9Fh must be clocked into the device. After the opcode has been clocked in, the device begins outputting the identification data on the SO pin during the subsequent clock cycles. The first byte that is output is the Manufacturer ID followed by two bytes of Device ID information. The fourth byte output is the Extended Device Information String Length, which is 00h indicating that no Extended Device Information follows. After the Extended Device Information String Length byte is output, the SO pin goes into a high-impedance state; thus, additional clock cycles have no affect on the SO pin and no data are output. As indicated in the JEDEC standard, reading the Extended Device Information String Length and any subsequent data is optional.Deasserting the $\overline{CS}$ pin stops the Manufacturer and Device ID read operation and put the SO pin into a high-impedance state. The $\overline{CS}$ pin can be deasserted at any time and does not require that a full byte of data be read.

Table 13. Manufacturer and Device ID Information

Byte No.	Data Type	Value
1	Manufacturer ID	1Fh
2	Device ID (Part 1)	43h
3	Device ID (Part 2)	01h
4	Extended Device Information String Length	00h

Table 14. Manufacturer and Device ID Details

Data Type	Bit 7	Bit 6	Bit 5	Bit 4	Bit 3	Bit 2	Bit 1	Bit 0	Hex Value	Details
Manufacturer ID	JEDEC Assigned Code								1Fh	JEDEC Code:0001 1111 (1Fh for Renesas Electronics)
	0	0	0	1	1	1	1	1		
Device ID (Part 1)	Family Code			Density Code					43h	Family Code:010 (AT25F/AT25DFxxx series) Density Code:00011 (2-Mbit)
	0	1	0	0	0	0	1	1		
Device ID (Part 2)	Sub Code			Product Version Code					01h	Sub Code:000 (Standard series) Product Version:00001
	0	0	0	0	0	0	0	1		

© 2023 Renesas Electronics

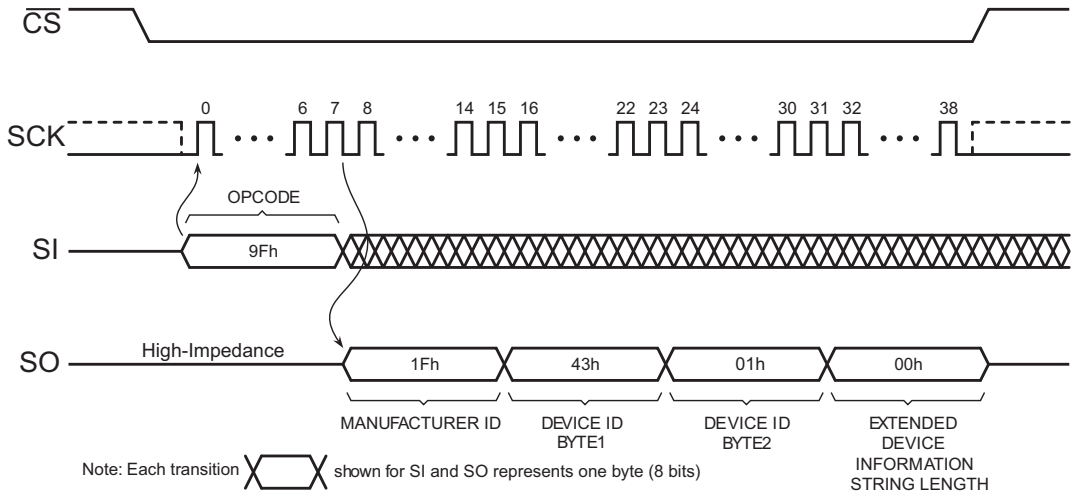

Figure 30. Read Manufacturer and Device ID

12.2 Deep Power-Down

During normal operation, the device is placed in the standby mode to consume less power as long as the $\overline{CS}$ pin remains deasserted and no internal operation is in progress. The Deep Power-Down command offers the ability to place the device into an even lower power consumption state called the Deep Power-Down mode.

When the device is in the Deep Power-Down mode, all commands including the Read Status Register command is ignored with the exception of the Resume from Deep Power-Down command. Since all commands are ignored, the mode can be used as an extra protection mechanism against program and erase operations.

Entering the Deep Power-Down mode is done by simply asserting the $\overline{CS}$ pin, clocking in the opcode of B9h, and then deasserting the $\overline{CS}$ pin. Any additional data clocked into the device after the opcode are ignored. When the $\overline{CS}$ pin is deasserted, the device enters the Deep Power-Down mode within the maximum time of t_{EDPD}.

The complete opcode must be clocked in before the $\overline{CS}$ pin is deasserted, and the $\overline{CS}$ pin must be deasserted on an even byte boundary (multiples of eight bits); otherwise, the device stops the operation and returns to the standby mode once the $\overline{CS}$ pin is deasserted. Also, the device defaults to the standby mode after a power-cycle.

The Deep Power-Down command is ignored if an internally self-timed operation such as a program or erase cycle is in progress. The Deep Power-Down command must be reissued after the internally self-timed operation has been completed in order for the device to enter the Deep Power-Down mode.

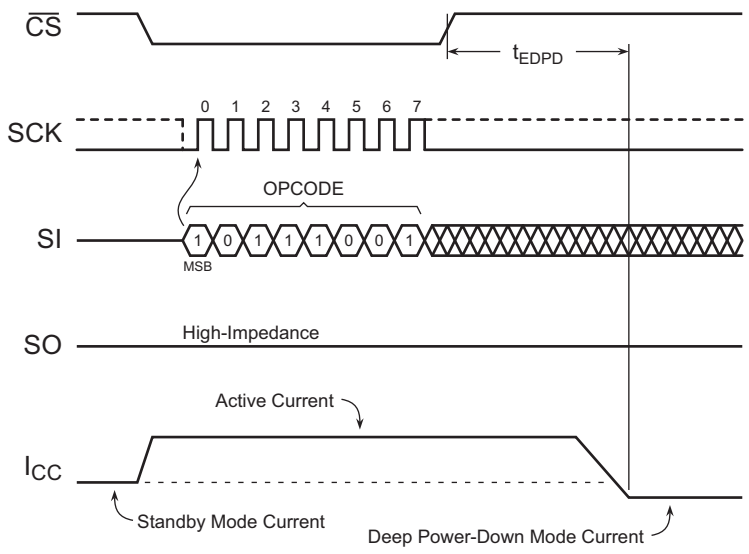

Figure 31. Deep Power-Down

© 2023 Renesas Electronics

12.3 Resume from Deep Power-Down

In order to exit the Deep Power-Down mode and resume normal device operation, the Resume from Deep Power-Down command must be issued. The Resume from Deep Power-Down command is the only command that the device recognize while in the Deep Power-Down mode.

To resume from the Deep Power-Down mode, the $\overline{CS}$ pin must first be asserted and opcode of ABh must be clocked into the device. Any additional data clocked into the device after the opcode are ignored. When the $\overline{CS}$ pin is deasserted, the device exits the Deep Power-Down mode within the maximum time of t_{RDPD} and return to the standby mode. After the device has returned to the standby mode, normal command operations such as Read Array can be resumed.

If the complete opcode is not clocked in before the $\overline{CS}$ pin is deasserted, or if the $\overline{CS}$ pin is not deasserted on an even byte boundary (multiples of eight bits), then the device stops the operation and return to the Deep Power-Down mode.

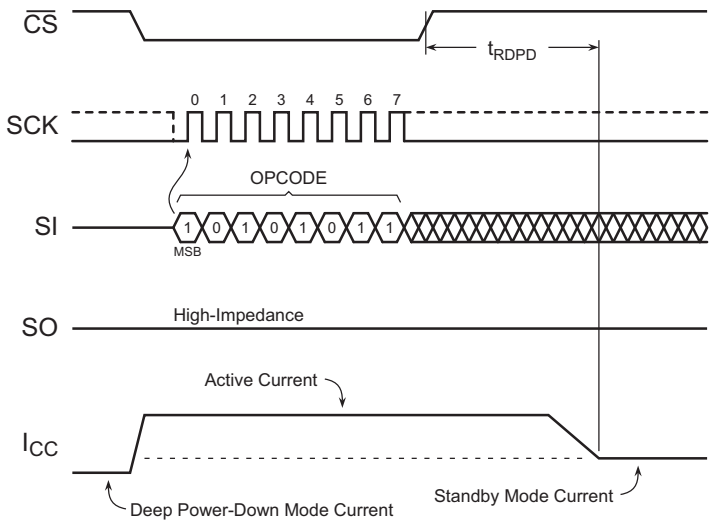

Figure 32. Resume from Deep Power-Down

© 2023 Renesas Electronics

12.4 Ultra-Deep Power-Down

The Ultra-Deep Power-Down mode allows the device to further reduce its energy consumption compared to the existing standby and Deep Power-Down modes by shutting down additional internal circuitry. When the device is in the Ultra-Deep Power-Down mode, all commands including the Status Register Read and Resume from Deep Power-Down commands are ignored. Since all commands are ignored, the mode can be used as an extra protection mechanism against inadvertent or unintentional program and erase operations. Entering the Ultra-Deep Power-Down mode is done by simply asserting the $\overline{CS}$ pin, clocking in the opcode 79h, and then deasserting the $\overline{CS}$ pin. Any additional data clocked into the device after the opcode is ignored. When the $\overline{CS}$ pin is deasserted, the device enters the Ultra-Deep Power-Down mode within the maximum time of t_{EUDPD}

The complete opcode must be clocked in before the $\overline{CS}$ pin is deasserted; otherwise, the device stops the operation and return to the standby mode once the $\overline{CS}$ pin is deasserted. Also, the device defaults to the standby mode after a power cycle. The Ultra-Deep Power-Down command is ignored if an internally self-timed operation such as a program or erase cycle is in progress.

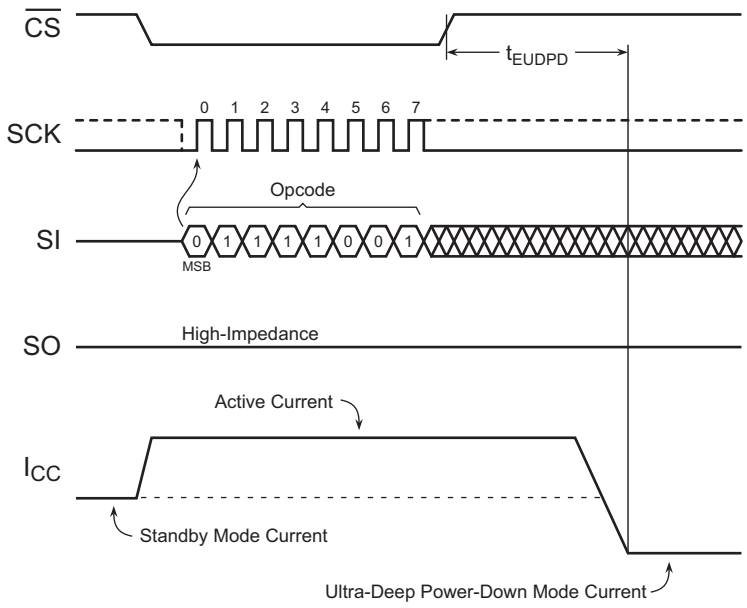

Figure 33. Ultra-Deep Power-Down

© 2023 Renesas Electronics

12.5 Exit Ultra-Deep Power-Down

To exit from the Ultra-Deep Power-Down mode, any one of the three operations described in the subsections below can be performed.

12.5.1 Chip Select Toggle

The $\overline{CS}$ pin must simply be pulsed by asserting the $\overline{CS}$ pin, waiting the minimum necessary t_{CSLU} time, and then deasserting the $\overline{CS}$ pin again. To facilitate simple software development, a dummy byte opcode can also be entered while the $\overline{CS}$ pin is being pulsed; the dummy byte opcode is simply ignored by the device in this case. After the $\overline{CS}$ pin has been deasserted, the device exits from the Ultra-Deep Power-Down mode and return to the standby mode within a maximum time of t_{XUDPD} If the $\overline{CS}$ pin is reasserted before the t_{XUDPD} time has elapsed in an attempt to start a new operation, then that operation is ignored and nothing is performed.

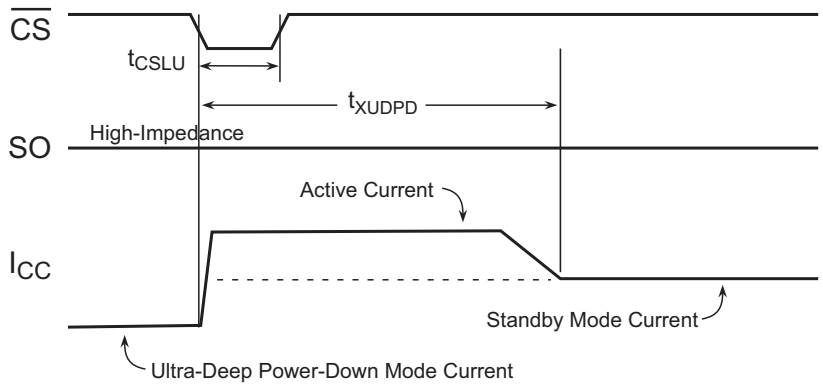

Figure 34. Exit Ultra-Deep Power-Down (Chip Select Toggle)

12.5.2 Chip Select Low

By asserting the $\overline{CS}$ pin, waiting the minimum necessary t_{XUDPD} time, and then clocking in the first bit of the next Opcode command cycle. If the first bit of the next command is clocked in before the t_{XUDPD} time has elapsed, the device exits Ultra Deep Power Down, however the intended operation is ignored.

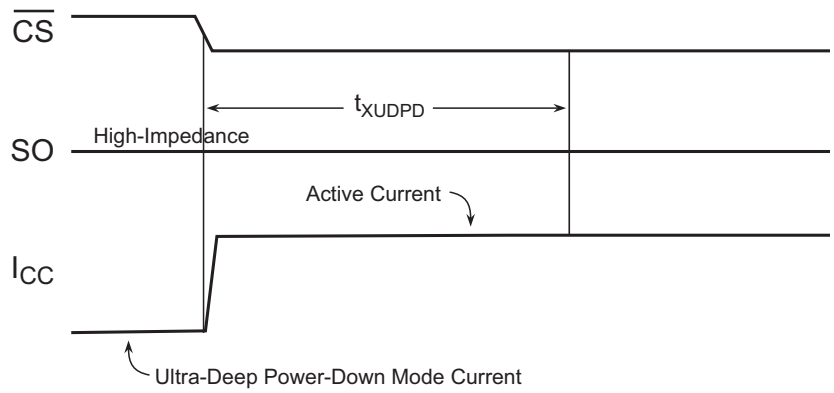

Figure 35. Exit Ultra-Deep Power-Down (Chip Select Low)

12.5.3 Power Cycling

The device can also exit the Ultra Deep Power Mode by power cycling the device. The system must wait for the device to return to the standby mode before normal command operations can be resumed. Upon recovery from Ultra Deep Power Down all internal registers are at their Power-On default state.

© 2023 Renesas Electronics

12.6 Hold

The $\overline{\text{HOLD}}$ pin is used to pause the serial communication with the device without having to stop or reset the clock sequence. The Hold mode, however, does not have an affect on any internally self-timed operations such as a program or erase cycle. Thus, if an erase cycle is in progress, asserting the $\overline{\text{HOLD}}$ pin does not pause the operation, and the erase cycle continues until it is finished.

The Hold mode can only be entered while the $\overline{\text{CS}}$ pin is asserted. The Hold mode is activated simply by asserting the $\overline{\text{HOLD}}$ pin during the SCK low pulse. If the $\overline{\text{HOLD}}$ pin is asserted during the SCK high pulse, then the Hold mode won't be started until the beginning of the next SCK low pulse. The device remains in the Hold mode as long as the $\overline{\text{HOLD}}$ pin and $\overline{\text{CS}}$ pin are asserted.

While in the Hold mode, the SO pin is in a high-impedance state. Also, both the SI pin and the SCK pin is ignored. The $\overline{\text{WP}}$ pin, however, can still be asserted or deasserted while in the Hold mode.

To end the Hold mode and resume serial communication, the $\overline{\text{HOLD}}$ pin must be deasserted during the SCK low pulse. If the $\overline{\text{HOLD}}$ pin is deasserted during the SCK high pulse, then the Hold mode won't end until the beginning of the next SCK low pulse.

If the $\overline{\text{CS}}$ pin is deasserted while the $\overline{\text{HOLD}}$ pin is still asserted, then any operation that was started is stopped, and the device resets the WEL bit in the Status Register back to the logical 0 state.

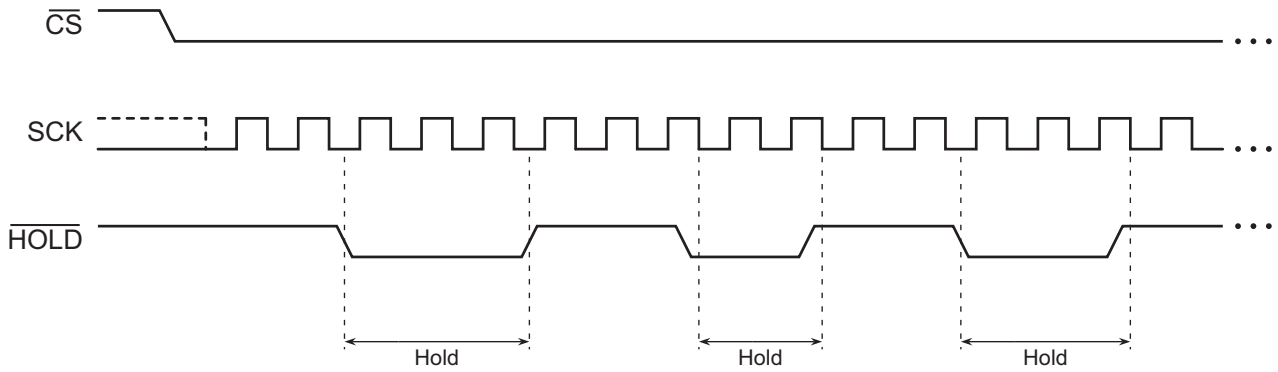

Figure 36. Hold Mode

© 2023 Renesas Electronics

12.7 Reset

In some applications, it may be necessary to prematurely stop a program or erase operation rather than wait the hundreds of microseconds or milliseconds necessary for the program or erase operation to complete normally. The Reset command allows a program or erase operation in progress to be ended abruptly and returns the device to an idle state. Since the device must be reset immediately, the Write Enable command does not need to be issued prior to the Reset command. Thus, the Reset command operates independently of the state of the WEL bit in the Status Register.

The Reset command can be executed only if the command has been enabled by setting the Reset Enabled (RSTE) bit in the Status Register to a Logical 1 using write status register byte 2 command 31h. This command must be entered before a program command is entered. If the Reset command has not been enabled (the RSTE bit is in the Logical 0 state), then any attempts at executing the Reset command is ignored.

To perform a Reset, the $\overline{CS}$ pin must first be asserted, and then the opcode F0h must be clocked into the device. No address bytes need to be clocked in, but a confirmation byte of D0h must be clocked into the device immediately after the opcode. Any additional data clocked into the device after the confirmation byte is ignored. When the $\overline{CS}$ pin is deasserted, the program operation currently in progress is stopped within a time of t_{SWRST}. Since the program or erase operation may not complete before the device is reset, the contents of the page being programmed or erased cannot be guaranteed to be valid.

The Reset command has no effect on the states of the Status Registers. If issued during and erase/program operation (apart from Sequential Programming) the WEL bit is cleared when the erase/program operation stops.

The complete opcode and confirmation byte must be clocked into the device before the $\overline{CS}$ pin is deasserted, and the $\overline{CS}$ pin must be deasserted on an even byte boundary (multiples of eight bits); otherwise, no Reset operation is performed.

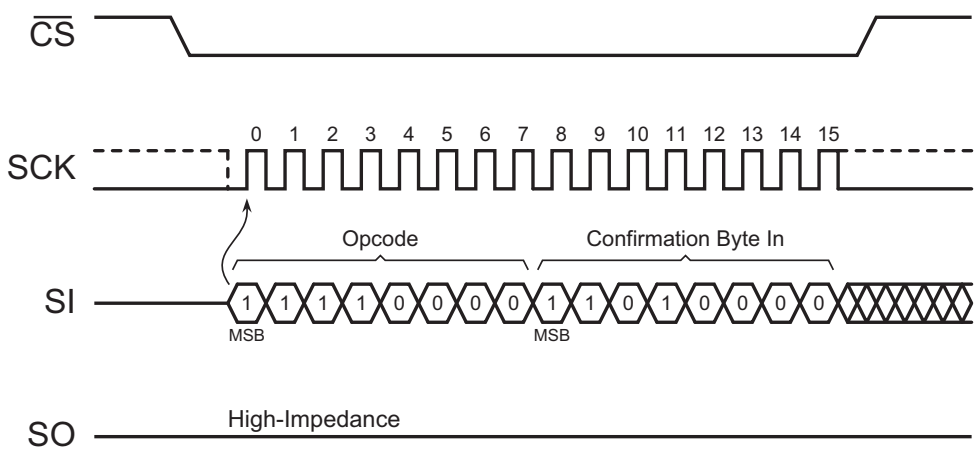

Figure 37. Reset

© 2023 Renesas Electronics

13. Electrical Specifications

13.1 Absolute Maximum Ratings*

Temperature under Bias . . . . . -55°C to +125°C	
Storage Temperature. . . . . -65°C to +150°C	
All Input Voltages (including NC Pins) with Respect to Ground. . . . . -0.6 V to +4.1 V	
All Output Voltages with Respect to Ground. . . . .-0.6 V to V_{CC} + 0.5 V	

*Notice: Stresses beyond those listed under “Absolute Maximum Ratings” can cause permanent damage to the device. This is a stress rating only and functional operation of the device at these or any other conditions beyond those indicated in the operational sections of this specification is not implied. Exposure to absolute maximum rating conditions for extended periods can affect device reliability.

13.2 DC and AC Operating Range

Operating Temperature (Case)	-40°C to +85°C (V_{CC} Power Supply 1.65 V to 3.6 V)
	-40°C to +125°C (V_{CC} Power Supply 1.7 V to 3.6 V)

13.3 DC Characteristics (-40°C to +85°C)

Symbol	Parameter	Condition	1.65 V to 3.6 V			2.3 V to 3.6 V			Units
			Min	Typ	Max	Min	Typ	Max	
I_{UDPD}	Ultra-Deep Power-Down Current	$\overline{CS}$ = $V_{CC.}$ All other inputs at 0 V or V_{CC}		0.2	0.6		0.35	0.6	µA
I_{DPD}[1]	Deep Power-Down Current	$\overline{CS}$ = $V_{CC.}$ All other inputs at 0 V or V_{CC}		4.5	15		5	15	µA
I_{SB}	Standby Current	$\overline{CS}$ = $V_{CC.}$ All other inputs at 0 V or V_{CC}		25	40		25	40	µA
I_{CC1}[2][3]	Active Current, Low Power Read (03h, 0Bh) Operation	f = 1 MHz; I_{OUT} = 0 mA		4.5	6		5	6	mA
		f = 20 MHz; I_{OUT} = 0 mA		5	7		6	7	mA
I_{CC2}[2][3]	Active Current, Read Operation	f = 50 MHz; I_{OUT} = 0 mA		5	7		6	7	mA
		f = 85 MHz; I_{OUT} = 0 mA		5	7		6	7	mA
I_{CC3}[2][3]	Active Current, Program Operation	$\overline{CS}$ = V_{CC}		11	14		12	14	mA
I_{CC4}[2][3]	Active Current, Erase Operation	$\overline{CS}$ = V_{CC}		11	14		12	14	mA
I_{LI}	Input Load Current	All inputs at CMOS levels			1			1	µA
I_{LO}	Output Leakage Current	All inputs at CMOS levels			1			1	µA
V_{IL}	Input Low Voltage				V_{CC} x 0.2			V_{CC} x 0.3	V
V_{IH}	Input High Voltage		V_{CC} x 0.8			V_{CC} x 0.7			V
V_{OL}	Output Low Voltage	I_{OL} = 100 µA			0.2			0.2	V
V_{OH}	Output High Voltage	I_{OH} = -100 µA	V_{CC} - 0.2 V			V_{CC} - 0.2V			V

1. Max. specification is 20 µA @ 85°C
2. Typical values measured at 1.8 V @ 25°C for the 1.65 V to 3.6 V range.
3. Typical values measured at 3.0 V @ 25°C for the 2.3 V to 3.6 V range.

© 2023 Renesas Electronics

13.4 DC Characteristics (-40°C to +125°C)

Symbol	Parameter	Condition	1.7 V to 3.6 V			2.3 V to 3.6 V			Units
			Min	Typ	Max	Min	Typ	Max	
I_{UDPD}	Ultra-Deep Power-Down Current	$\overline{CS}$ = $V_{CC.}$ All other inputs at 0 V or V_{CC}		0.2	1		0.3	1	µA
I_{DPD}	Deep Power-Down Current	$\overline{CS}$ = $V_{CC.}$ All other inputs at 0 V or V_{CC}		5	40		8	40	µA
I_{SB}	Standby Current	$\overline{CS}$ = $V_{CC.}$ All other inputs at 0 V or V_{CC}		25	65		25	65	µA
I_{CC1}[1][2]	Active Current, Low Power Read (03h, 0Bh) Operation	f = 1 MHz; I_{OUT} = 0 mA		4.5	6		5	6	mA
		f = 20 MHz; I_{OUT} = 0 mA		5	7		6	7	mA
I_{CC2}[2][3]	Active Current, Read Operation	f = 50 MHz; I_{OUT} = 0 mA		5	7		6	7	mA
		f = 85 MHz; I_{OUT} = 0 mA		5	7		6	7	mA
I_{CC3}[2][3]	Active Current, Program Operation	$\overline{CS}$ = V_{CC}		11	14.5		12	14.5	mA
I_{CC4}[2][3]	Active Current, Erase Operation	$\overline{CS}$ = V_{CC}		11	14.5		12	14.5	mA
I_{LI}	Input Load Current	All inputs at CMOS levels			1			1	µA
I_{LO}	Output Leakage Current	All inputs at CMOS levels			1			1	µA
V_{IL}	Input Low Voltage				V_{CC} x 0.2			V_{CC} x 0.3	V
V_{IH}	Input High Voltage		V_{CC} x 0.8			V_{CC} x 0.7			V
V_{OL}	Output Low Voltage	I_{OL} = 100 µA			0.2			0.2	V
V_{OH}	Output High Voltage	I_{OH} = -100 µA	V_{CC} - 0.2 V			V_{CC} - 0.2V			V

1. Typical values measured at 1.8 V @ 25°C for the 1.7 V to 3.6 V range.
2. Typical values measured at 3.0 V @ 25°C for the 2.3 V to 3.6 V range.

13.5 AC Characteristics - Maximum Clock Frequencies (-40°C to +85°C)

Symbol	Parameter	1.65 V to 3.6 V			2.3 V to 3.6 V			Units
		Min	Typ	Max	Min	Typ	Max	
f_{CLK}	Maximum Clock Frequency for All Operations (excluding 0Bh opcode)			104			104	MHz
f_{RDLF}	Maximum Clock Frequency for 03h Opcode (Read Array – Low Frequency)			25			33	MHz
f_{RDDO}	Maximum Clock Frequency for 3B Opcode			50			50	MHz

13.6 AC Characteristics - Maximum Clock Frequencies (-40°C to +125°C)

Symbol	Parameter	1.7 V to 3.6 V			2.3 V to 3.6 V			Units
		Min	Typ	Max	Min	Typ	Max	
f_{CLK}	Maximum Clock Frequency for All Operations (excluding 0Bh opcode)			85			85	MHz
f_{RDLF}	Maximum Clock Frequency for 03h Opcode (Read Array – Low Frequency)			25			25	MHz
f_{RDDO}	Maximum Clock Frequency for 3B Opcode			40			40	MHz

© 2023 Renesas Electronics

13.7 AC Characteristics – All Other Parameters

Symbol	Parameter	1.65 V to 3.6 V and 1.7 V to 3.6 V			2.3 V to 3.6 V			Units
		Min	Typ	Max	Min	Typ	Max	
t_{CLKH}	Clock High Time	4.5			4.5			ns
t_{CLKL}	Clock Low Time	4			4			ns
t_{CLKR}[1]	Clock Rise Time, Peak-to-Peak (Slew Rate)	0.1			0.1			V/ns
t_{CLKF}[1]	Clock Fall Time, Peak-to-Peak (Slew Rate)	0.1			0.1			V/ns
t_{CSH}	Chip Select High Time	35			25			ns
t_{CSLS}	Chip Select Low Setup Time (relative to Clock)	6			5			ns
t_{CSLH}	Chip Select Low Hold Time (relative to Clock)	6			5			ns
t_{CSHS}	Chip Select High Setup Time (relative to Clock)	6			5			ns
t_{CSHH}	Chip Select High Hold Time (relative to Clock)	6			5			ns
t_{DS}	Data In Setup Time	2			2			ns
t_{DH}	Data In Hold Time	1			1			ns
t_{DIS}[1]	Output Disable Time			8			6	ns
t_V	Output Valid Time			7.5			7	ns
t_{OH}	Output Hold Time	0			0			ns
t_{HLS}	$\overline{HOLD}$ Low Setup Time (relative to Clock)	6			5			ns
t_{HLH}	$\overline{HOLD}$ Low Hold Time (relative to Clock)	6			5			ns
t_{HHS}	$\overline{HOLD}$ High Setup Time (relative to Clock)	6			5			ns
t_{HHH}	$\overline{HOLD}$ High Hold Time (relative to Clock)	6			5			ns
t_{HLQZ}[1]	$\overline{HOLD}$ Low to Output High-Z			7			6	ns
t_{HHQX}[1]	$\overline{HOLD}$ High to Output Low-Z			7			6	ns
t_{WPS}[1]	Write Protect Setup Time	20			20			ns
t_{WPH}[1]	Write Protect Hold Time	100			100			ns
t_{EDPD}[1]	Chip Select High to Deep Power-Down			3			3	µs
t_{EUDPD}.	Chip Select High to Ultra Deep Power-Down			3			3	µs
t_{SWRST}	Software Reset Time			40			40	µs
t_{CSLU}	Minimum Chip Select Low to Exit Ultra Deep Power-Down	20			20			ns
t_{XUDPD}	Exit Ultra Deep Power-Down Time	70			70			µs
t_{RDPD}[1]	Chip Select High to Standby Mode			8			8	µs

1. Not 100% tested (value guaranteed by design and characterization).

© 2023 Renesas Electronics

13.8 Program and Erase Characteristics (-40°C to +85°C)

Symbol	Parameter		1.65V-3.6V			2.3V-3.6V			
			Min	Typ	Max	Min	Typ	Max	Units
t_{PP}[1]	Page Program Time (256 Bytes)			1.25	2.5		1.25	2.5	ms
t_{BP}	Byte Program Time			8			8		µs
t_{PE}	Page Erase Time (256 Bytes)			6	20		6	15	ms
t_{BLKE}[1]	Block Erase Time	4 kBytes		40	60		40	50	ms
		32 kBytes		250	500		250	400	
		64 kBytes		500	1000		500	800	
t_{CHPE}[1][2]	Chip Erase Time			2.0	4		2.0	3.2	sec
t_{OTPP}[1]	OTP Security Register Program Time			400	950		400	950	µs
t_{WRSR}	Write Status Register Time				200			200	ns

1. Maximum values indicate worst-case performance after 100,000 erase/program cycles.
2. Not 100% tested (value guaranteed by design and characterization).

13.9 Program and Erase Characteristics (-40°C to +125°C)

Symbol	Parameter		1.7 V-3.6V			2.3V-3.6V			
			Min	Typ	Max	Min	Typ	Max	Units
t_{PP}[1]	Page Program Time (256 Bytes)			2	6		2	5	ms
t_{BP}	Byte Program Time			12			12		µs
t_{PE}	Page Erase Time (256 Bytes)			6	20		6	20	ms
t_{BLKE}[1]	Block Erase Time	4 kBytes		45	100		45	100	ms
		32 kBytes		300	700		300	700	
		64 kBytes		500	1400		500	1400	
t_{CHPE}[1][2]	Chip Erase Time			2.5	6		2.5	6	s
t_{OTPP}[1]	OTP Security Register Program Time			400	950		400	950	µs
t_{WRSR}	Write Status Register Time				200			200	ns

1. Maximum values indicate worst-case performance after 20,000 erase/program cycles.
2. Not 100% tested (value guaranteed by design and characterization).

© 2023 Renesas Electronics

14. Power-On/Reset State

When power is first applied to the device, or when recovering from a reset condition, the output pin (SO) is in a high-impedance state, and a high-to-low transition on the CSB pin is required to start a valid command. The SPI mode (Mode 3 or Mode 0) is automatically selected on every falling edge of CSB by sampling the inactive clock state.

14.1 Power-Up/Power-Down Voltage and Timing Requirements

During power-up, the device must not be READ for at least the minimum t_{VCSL} time after the supply voltage reaches the minimum V_{POR} level (V_{POR} min). While the device is being powered-up, the internal Power-On Reset (POR) circuitry keeps the device in a reset mode until the supply voltage rises above the minimum V_{CC}. During this time, all operations are disabled, and the device does not respond to any commands.

If the first operation to the device after power-up is a program or erase operation, then the operation cannot be started until the supply voltage reaches the minimum V_{CC} level and an internal device delay has elapsed. This delay is a maximum time of t_{PUW}. After the t_{PUW} time, the device is in the standby mode (if CSB is at logic high), or active mode (if CSB is at logic low). For the case of Power-down then Power-up operation, or if a power interruption occurs (such that V_{CC} drops below V_{POR} max), the V_{CC} of the Flash device must be maintained below V_{PWD} for at least the minimum specified T_{PWD} time. This is to ensure the Flash device resets properly after a power interruption.

Table 15. Voltage and Timing Requirements for Power-Up/Power-Down

Symbol	Parameter	Min	Max	Units
V_{PWD}	V_{CC} for device initialization		1.0	V
T_{PWD}	Minimum duration for device initialization	300		µs
T_{VCSL}	Minimum V_{CC} to chip select low time for Read command	70		µs
T_{VR}	V_{CC} rise time	1	500000	µs/V
V_{POR}	Power on reset voltage	1.45	1.6	V
T_{PUW}	Power up delay time before Program or Erase is allowed		3	ms

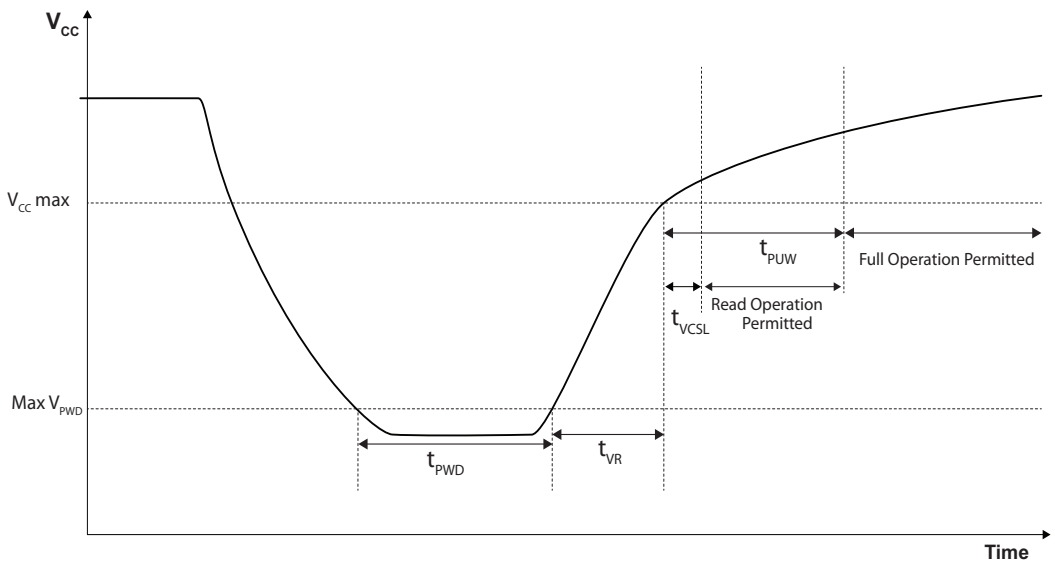

Figure 38. Power-Up Timing

© 2023 Renesas Electronics

14.2 Input Test Waveforms and Measurement Levels

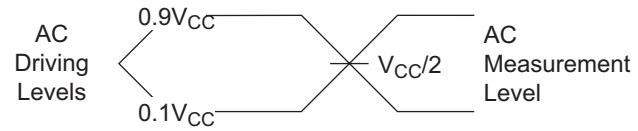

t_R, t_F < 2ns (10% to 90%)

14.3 Output Test Load

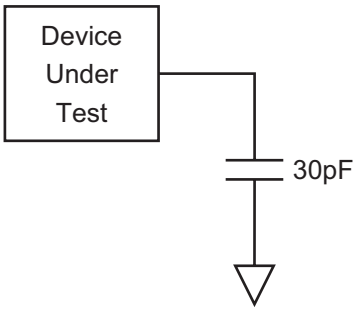

© 2023 Renesas Electronics

15. AC Waveforms

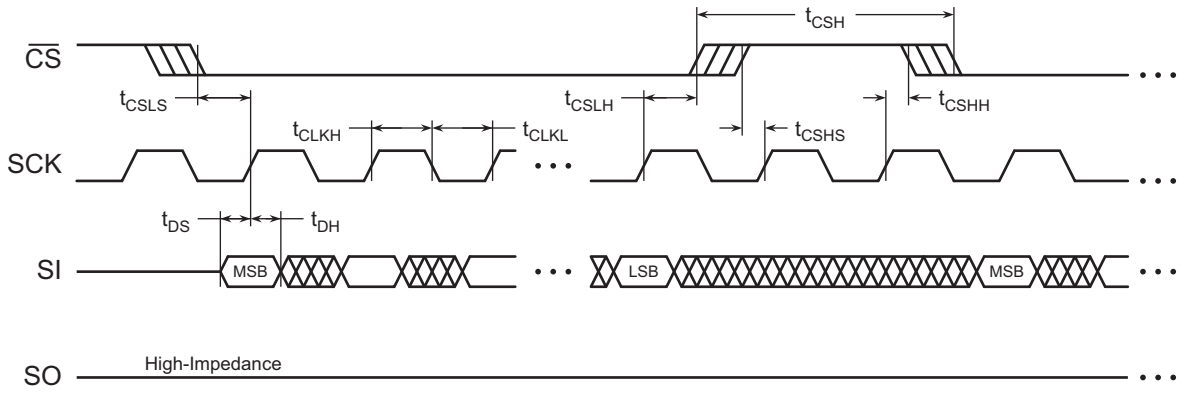

Figure 39. Serial Input Timing

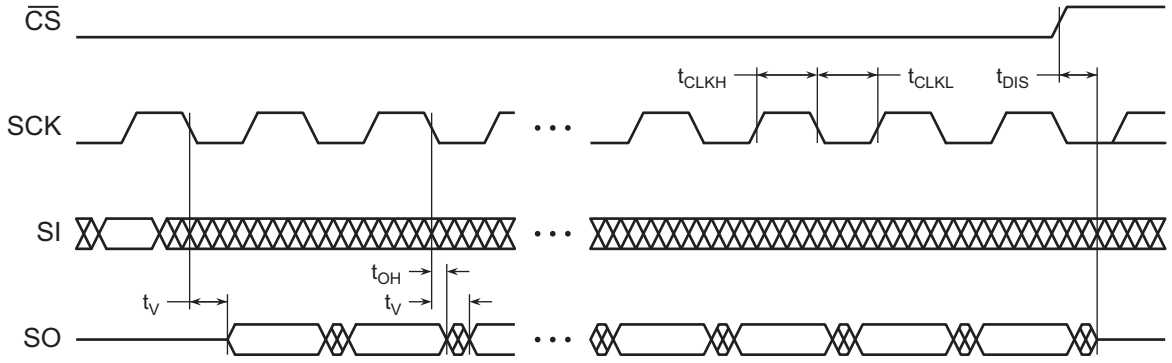

Figure 40. Serial Output Timing

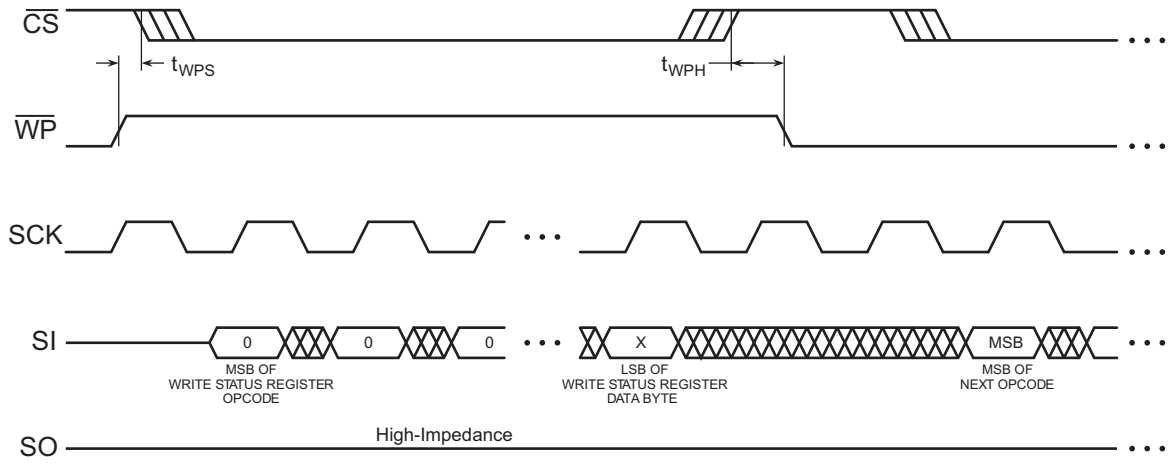

Figure 41. $\overline{WP}$ Timing for Write Status Register Command When BPL = 1

© 2023 Renesas Electronics

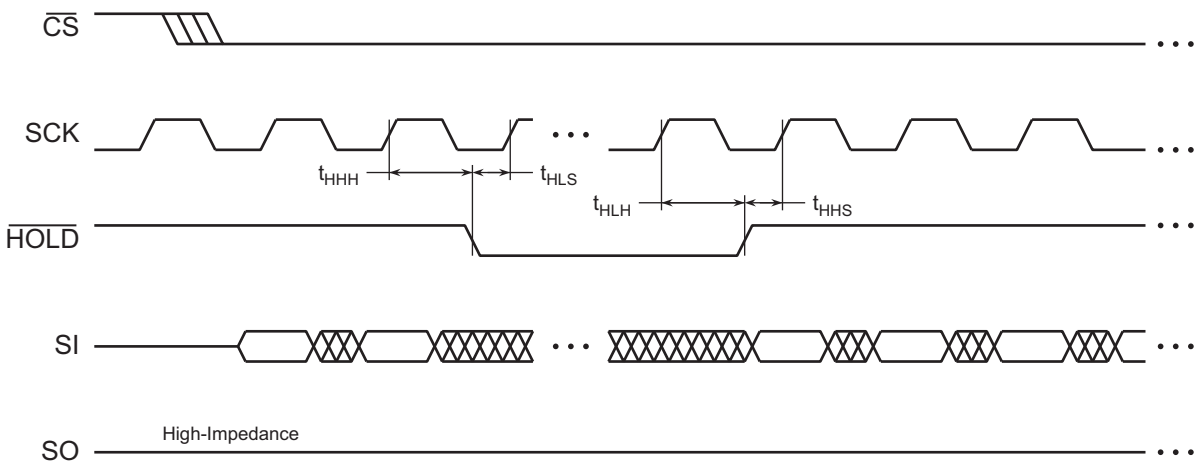

Figure 42. $\overline{\text{HOLD}}$ Timing – Serial Input

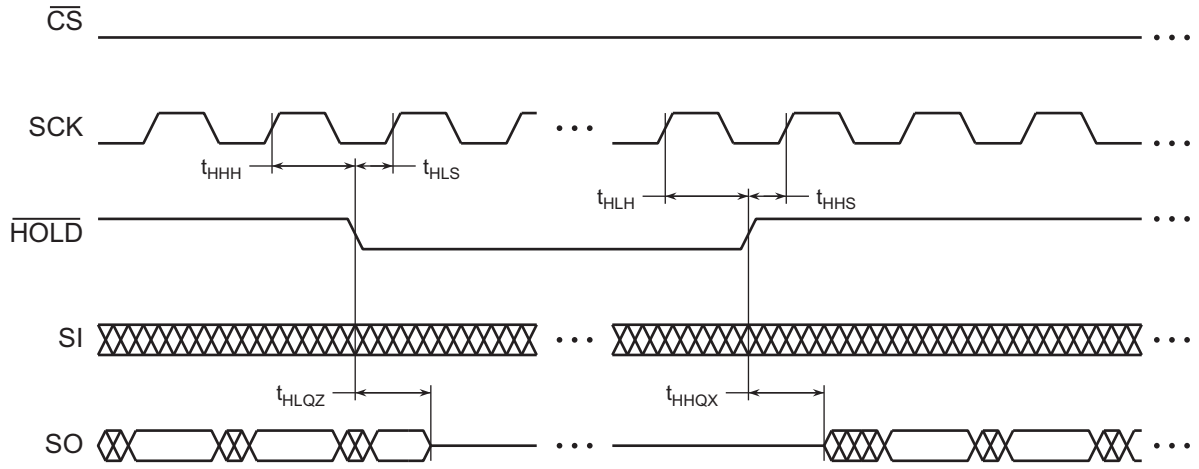

Figure 43. $\overline{\text{HOLD}}$ Timing – Serial Output

© 2023 Renesas Electronics

16. Ordering Information

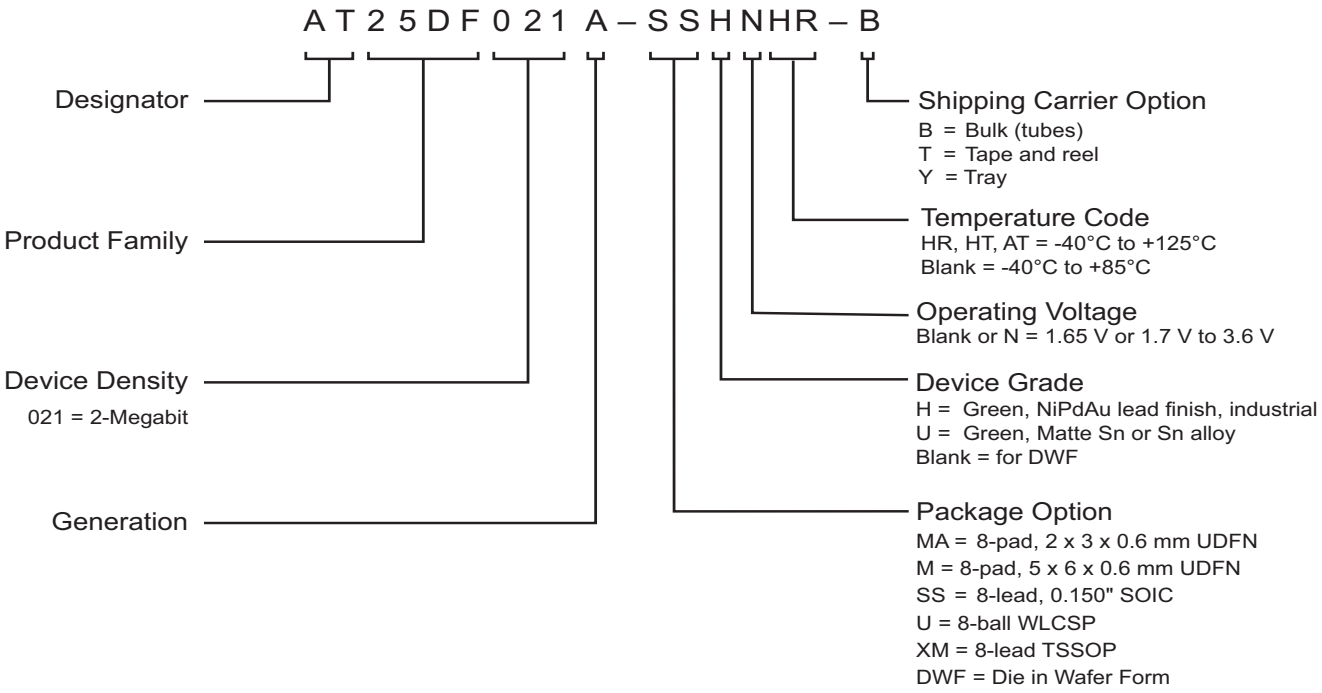

Ordering Code[1]	Package	Lead Finish	Operating Voltage	Max. Freq.	Temperature Range
AT25DF021A-SSHN-B	JEDEC SOIC: 8-lead, 0.150" Wide, Plastic Gull Wing Small Outline Pkg	NiPdAu	1.65 V to 3.6 V	104 MHz	Industrial (-40°C to +85°C)
AT25DF021A-SSHN-T					
AT25DF021A-MHN-Y	UDFN: 8-pad, 5 x 6 x 0.6 mm, Thermally Enhanced Plastic Ultra Thin Dual Flat No Lead Pkg				
AT25DF021A-MHN-T					
AT25DF021A-MAHN-T	UDFN: 8-pad, 2 x 3 x 0.6 mm Thermally Enhanced Plastic Ultra Thin Dual Flat No Lead Pkg				
AT25DF021A-XMHN-B	8X: 8-lead, Thin Shrink Small Outline Pkg				
AT25DF021A-XMHN-T					
AT25DF021A-UUN-T	8-WLCSP: 8-ball, 3 x 2 x 3 mm Ball Matrix, 0.35 mm Z-height	SnAgCu			
AT25DF021A-DWF[2]	Die in Wafer Form	n/a			
AT25DF021A-SSHNHR-T	JEDEC SOIC: 8-lead, 0.150" Wide, Plastic Gull Wing Small Outline Pkg	NiPdAu	1.7 V to 3.6 V	85 MHz	Extended (-40°C to +125°C)
AT25DF021A-MHNHR-T	UDFN: 8-pad, 2 x 3 x 0.6 mm or 5 x 6 x 0.6 mm, Thermally Enhanced Plastic Ultra Thin Dual Flat No Lead Pkg				
AT25DF021A-MAHNHR-T					
AT25DF021A-XMHNHR-T	8X: 8-lead, Thin Shrink Small Outline Package				
AT25DF021A-UUNHR-T	8-WLCSP: 8-ball, 3 x 2 x 3 mm Ball Matrix, 0.35 mm Z-height	SnAgCu			
AT25DF021A-DWFHT [2]	Die in Wafer Form	n/a			
AT25DF021A-DWFAT[2][3]					

1. The shipping carrier code is not marked on the device.
2. Contact Renesas Electronics for mechanical drawing and Die sales information.
3. Automotive Service Pack.

© 2023 Renesas Electronics

17. Packaging Information

17.1 8-Lead JEDEC SOIC

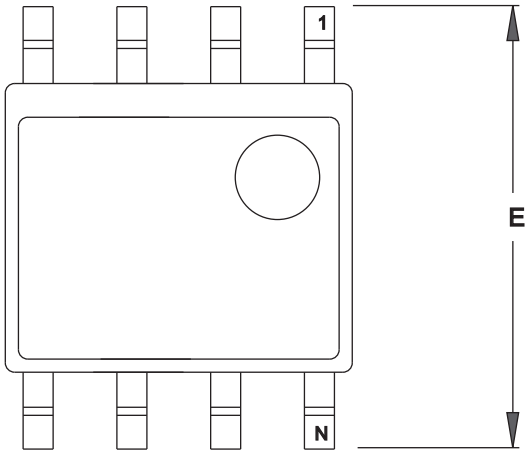

TOP VIEW

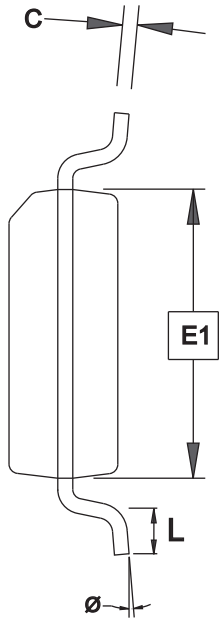

END VIEW

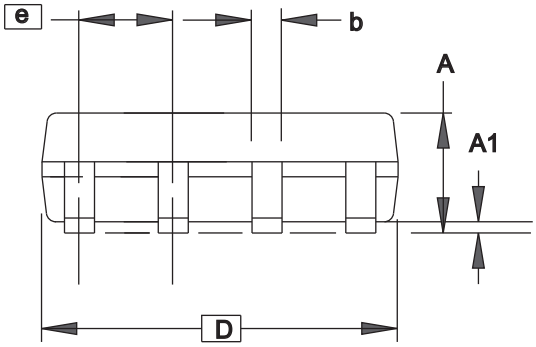

SIDE VIEW

Notes: This drawing is for general information only. Refer to JEDEC Drawing MS-012, Variation AA for proper dimensions, tolerances, datums, etc.

COMMON DIMENSIONS
(Unit of Measure = mm)

SYMBOL	MIN	NOM	MAX	NOTE
A	1.35	–	1.75	
A1	0.10	–	0.25	
b	0.31	–	0.51	
C	0.17	–	0.25	
D	4.80	–	5.05	
E1	3.81	–	3.99	
E	5.79	–	6.20	
e	1.27 BSC			
L	0.40	–	1.27	
Ø	0°	–	8°	

5/19/10

	TITLE	GPC	REV.
RENESAS	8-Lead (0.150” Wide Body), Plastic Gull Wing Small Outline (JEDEC SOIC)	SWB	F

© 2023 Renesas Electronics

17.2 8-Pad 2 x 3 x 0.6 mm UDFN/USON

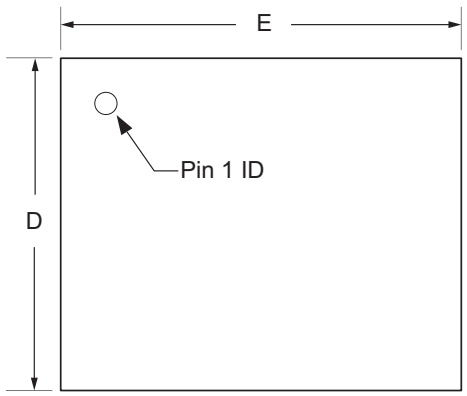

TOP VIEW

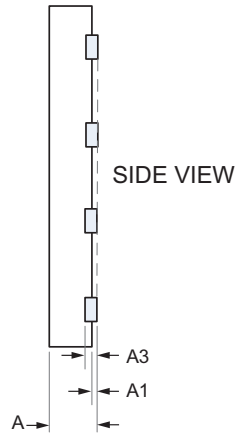

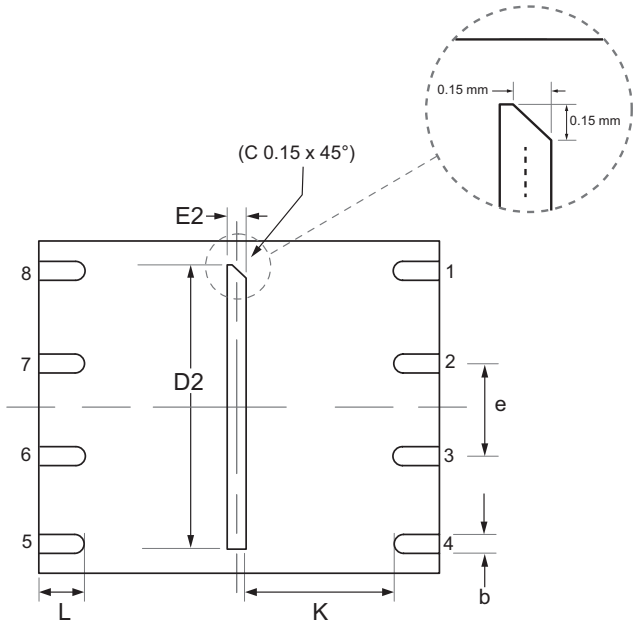

BOTTOM VIEW

COMMON DIMENSIONS
(Unit of Measure = mm)

SYMBOL	MIN	NOM	MAX
A	0.50	0.55	0.60
A1	0.00	0.02	0.05
A3		0.150 REF	
b	0.20	0.25	0.30
D		2.00 BSC	
D2	1.55	1.60	1.65
E		3.00 BSC	
e		0.50 BSC	
E2	0.15	0.20	0.25
K	0.20		
L	0.40	0.45	0.50

Notes: 1. This package conforms to JEDEC reference MO-229, Saw Singulation.
2. The terminal #1 ID is a Laser-marked feature.

	TITLE	GPC
RENESAS	8-pad (2 x 3 x 0.6 mm Body), Thermally Enhanced Plastic Ultra Thin Dual Flat No Lead Package (UDFN)	YFG

© 2023 Renesas Electronics

17.3 8-Pad 5 x 6 x 0.6 mm UDFN/USON

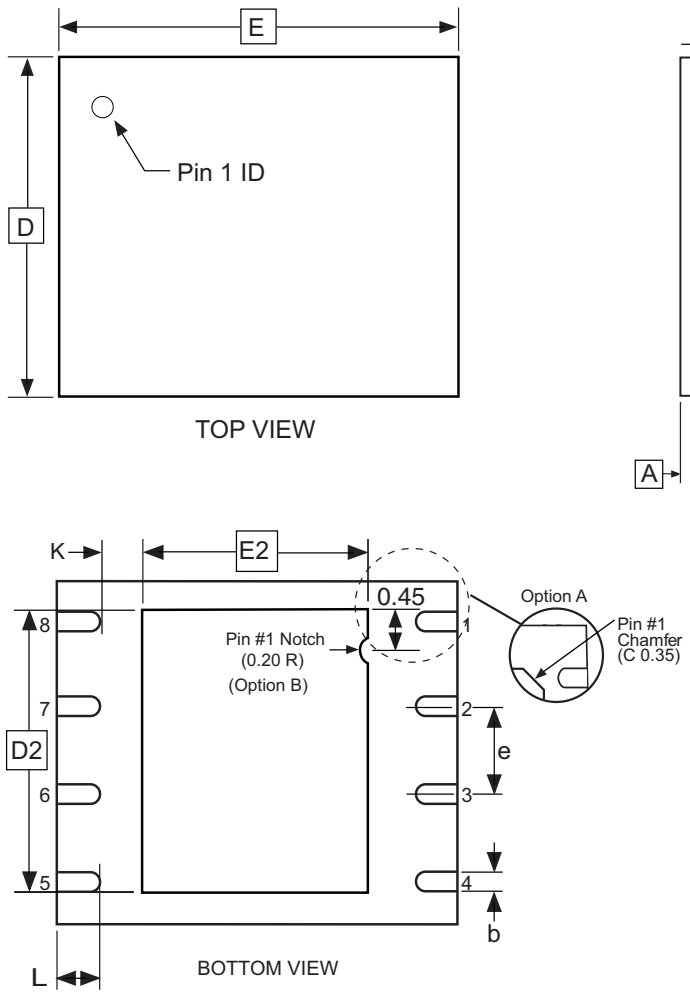

COMMON DIMENSIONS
(Unit of Measure = mm)

SYMBOL	MIN	NOM	MAX	NOTE
A	0.45	0.55	0.60	
A1	0.00	0.02	0.05	
b	0.35	0.40	0.48	
C		0.152 REF		
D	4.90	5.00	5.10	
D2	3.80	4.00	4.20	
E	5.90	6.00	6.10	
E2	3.20	3.40	3.60	
e		1.27		
L	0.50	0.60	0.75	
y	0.00	–	0.08	
K	0.20	–	–	

Notes: 1. This package conforms to JEDEC reference MO-229, Saw Singulation.
2. The terminal #1 ID is a Laser-marked Feature.

4/15/08

	TITLE	GPC	REV.
RENESAS	8-pad (5 x 6 x 0.6 mm Body), Thermally Enhanced Plastic Ultra Thin Dual Flat No Lead Package (UDFN)	YFG	D

© 2023 Renesas Electronics

17.4 8X-TSSOP

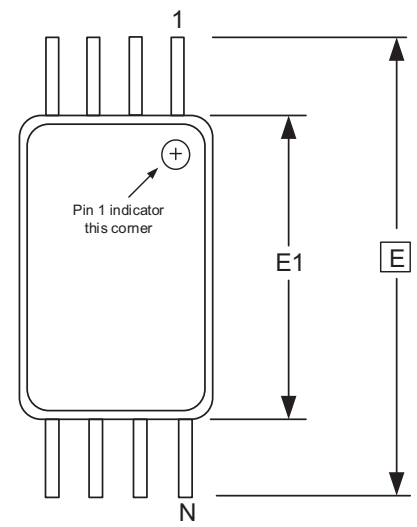

TOP VIEW

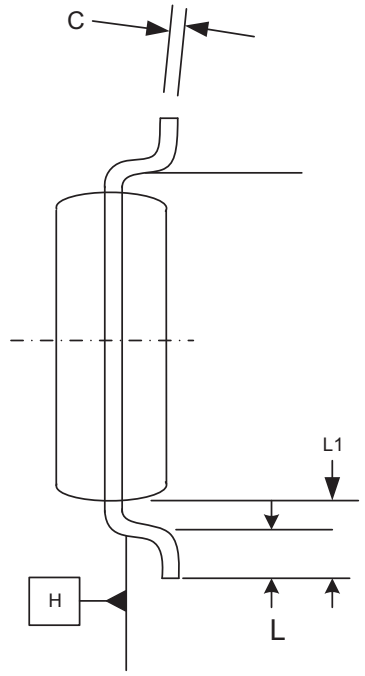

END VIEW

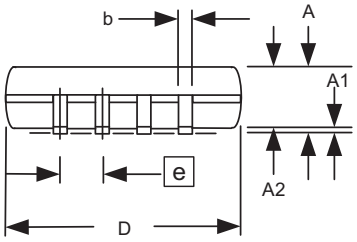

SIDE VIEW

Notes: 1. This drawing is for general information only.
Refer to JEDEC Drawing MO-153. Variation AA, for proper dimensions, tolerances, daturns, etc.
2. Dimension D does not include mold Flash, protrusions or gate burrs. Mold Flash, protrusions and gate burrs shall not exceed 0.15mm (0.006 in) per side.
3. Dimension E1 does not include inter-lead Flash or protrusions, Inter-lead Flash and protrusions shall not exceed 0.2 5mm (0.01 in) per side.4. Dimension b does not include Dambar protrusion. Allowable Dambar protrusion shall be 0.08 mm total in excess of the b dimension at maximum material condition. Damber cannot be located on the lower redius of the foot. Minimum space between protrusion and adjacent lead is 0.07 mm.
5. Dimension D and E1 to be determined at Datum Plane H.

COMMON DIMENSIONS
(Unit of Measure = mm)

SYMBOL	MIN	NOM	MAX	NOTE
A	--	–	1.20	
A1	0.05	–	0.15	
A2	0.80	1.00	1.05	
D	2.90	3.00	3.10	2, 5
E	6.40 BSC			
E1	4.30	4.40	4.50	3, 5
b	0.19	–	0.30	4
e	0.65 BSC			
L	0.45	0.60	0.75	
L1	1.00 REF			
C	0.09	–	0.20	

	TITLE	GPC	DRAWING NO.	REV.
RENESAS	8X, 8-lead 4.4 mm Body. Plastic Thin Shrink Small Outline Package (TSSOP)	TNR	8X	E

© 2023 Renesas Electronics

17.5 8-Ball WLCSP

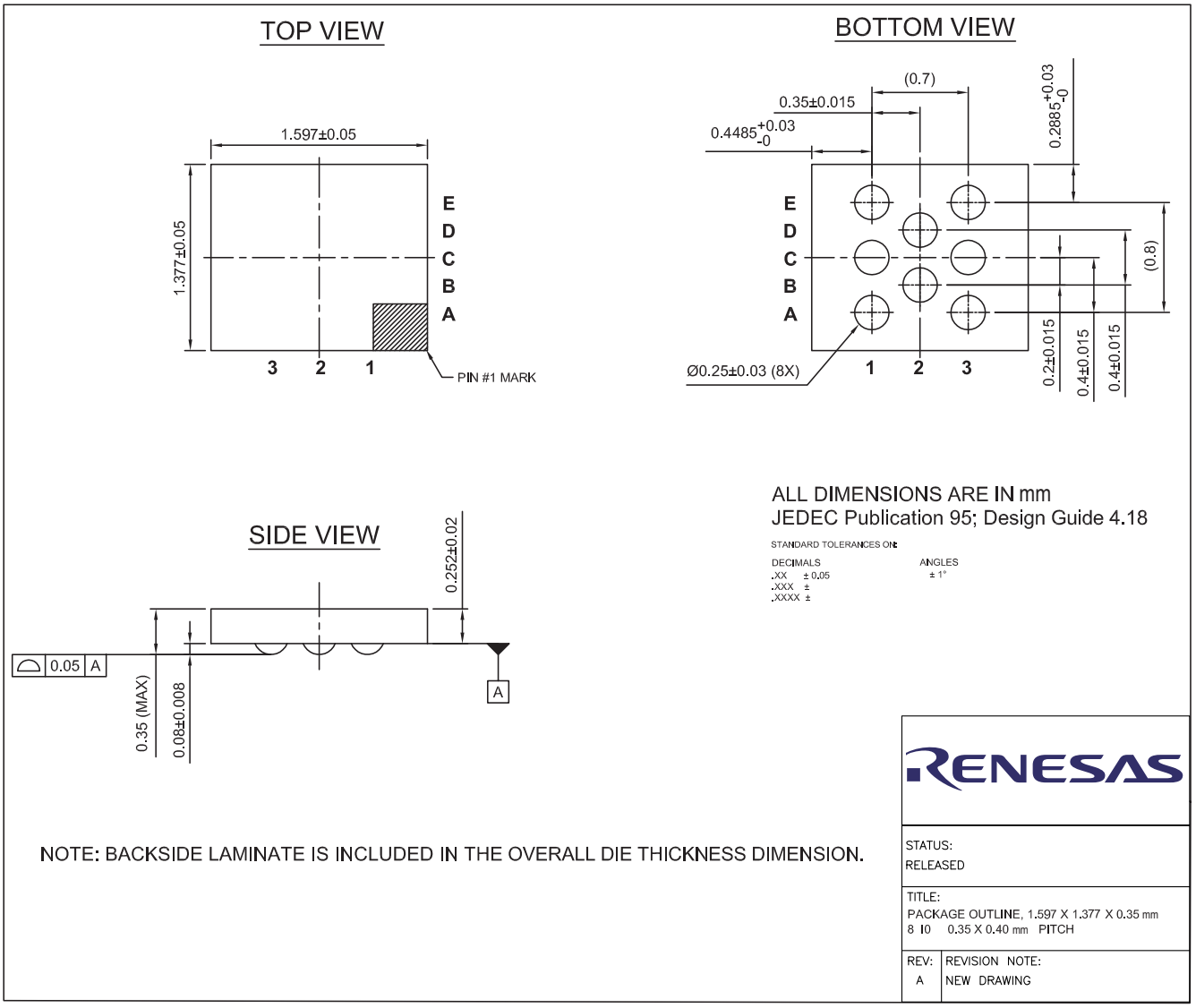

© 2023 Renesas Electronics

18. Revision History

Revision Level – Release Date	History
A – September 2014	Initial release
B – October 2014	Updated AC and DC specifications. Changed document status to preliminary.
C – February 2015	Added Die in Wafer Form (DWF) ordering operation. Added I_{DPD} specification footnote. Updated T_{PE} specification.
D – May 2015	Updated AC and DC characteristics. Expanded explanation of Power Up/Power Down (Section 14)
E – November 2015	Updated I_{DPD} and I_{SB} specification conditions. Updated document status from preliminary to complete.
F – February 2017	Added patent information. Updated description in section 8.4 (Page Erase).
G – December 2021	Updated package drawing in section 17.3.
H – February 2022	Changed company logo to Renesas.
I – June 2022	Applied new corporate template to document. Changed wording of the fourth paragraph in Section 12.7. Added the following to the description of $\overline{CS}$ in Table 1: “To ensure correct power-up sequencing, it is recommended to add a 10k Ohm pull-up resistor from $\overline{CS}$ to V_{CC}. This ensures $\overline{CS}$ ramps together with V_{CC} during power-up.”
J – December 2022	Integrated the AT25DF021A-042E-HR Addendum to content. Added AT25DF021A-DWFAT and DWFHT ordering codes to Section 16. Replaced POD in Section 17.2 with latest version. Added UUN-T package option and 8-ball WLCSP package drawing.
K – May 2023	Changed the upper limit of the industrial temperature from 104°C to 85°C in the Features list of the front page. Added parameters to the Ordering Information diagram in Section 16, and removed temperature range from Device Grade. Changed dimension in the WLCSP POD from 1.575+/-0.05 and 1.355+/-0.05 to 1.597 and 1.377, as well as from 0.4375 and 0.2775 to 0.4485 and 0.2885. Removed The SSHNHR-B and XMHNHR-B package options in the Ordering Info section. Changed the lead finish on the -UUN and -UUNHR packages in the Ordering Info section.
L – August 2023	In Sections 13.3 and 13.4, changed max value of V_{OL} from 0.4 V to 0.2 V.

© 2023 Renesas Electronics

IMPORTANT NOTICE AND DISCLAIMER

RENESAS ELECTRONICS CORPORATION AND ITS SUBSIDIARIES (“RENESAS”) PROVIDES TECHNICAL SPECIFICATIONS AND RELIABILITY DATA (INCLUDING DATASHEETS), DESIGN RESOURCES (INCLUDING REFERENCE DESIGNS), APPLICATION OR OTHER DESIGN ADVICE, WEB TOOLS, SAFETY INFORMATION, AND OTHER RESOURCES “AS IS” AND WITH ALL FAULTS, AND DISCLAIMS ALL WARRANTIES, EXPRESS OR IMPLIED, INCLUDING, WITHOUT LIMITATION, ANY IMPLIED WARRANTIES OF MERCHANTABILITY, FITNESS FOR A PARTICULAR PURPOSE, OR NON-INFRINGEMENT OF THIRD PARTY INTELLECTUAL PROPERTY RIGHTS.

These resources are intended for developers skilled in the art designing with Renesas products. You are solely responsible for (1) selecting the appropriate products for your application, (2) designing, validating, and testing your application, and (3) ensuring your application meets applicable standards, and any other safety, security, or other requirements. These resources are subject to change without notice. Renesas grants you permission to use these resources only for development of an application that uses Renesas products. Other reproduction or use of these resources is strictly prohibited. No license is granted to any other Renesas intellectual property or to any third party intellectual property. Renesas disclaims responsibility for, and you will fully indemnify Renesas and its representatives against, any claims, damages, costs, losses, or liabilities arising out of your use of these resources. Renesas' products are provided only subject to Renesas' Terms and Conditions of Sale or other applicable terms agreed to in writing. No use of any Renesas resources expands or otherwise alters any applicable warranties or warranty disclaimers for these products.

(Rev.1.0 Mar 2020)

Corporate Headquarters

TOYOSU FORESIA, 3-2-24 Toyosu,
Koto-ku, Tokyo 135-0061, Japan
www.renesas.com

Contact Information

For further information on a product, technology, the most up-to-date version of a document, or your nearest sales office, please visit:
www.renesas.com/contact/

Trademarks

Renesas and the Renesas logo are trademarks of Renesas Electronics Corporation. All trademarks and registered trademarks are the property of their respective owners.

© 2023 Renesas Electronics