CT10.241, CT10.241-C1

3-PHASE, 24V, 10A, 240W

POWER SUPPLY

- 3AC 380-480V wide-range input
- 2 or 3-phase operation possible
- Width only 62mm
- Efficiency up to 92.9% due to synchronous rectifier
- Excellent partial load efficiency
- 20% output power reserves (PowerBoost)
- Easy fuse tripping due to high overload current
- Input -transient blanking circuit included
- Minimal inrush current surge
- Three input fuses included
- Current sharing feature for parallel use
- Full power between -25°C and +60°C
- 3 year warranty

PRODUCT DESCRIPTION

The Dimension CT-Series are cost optimized power supplies without compromising quality, reliability and performance. The CT-Series is part of the DIMENSION power supply family. The most outstanding features of CT10.241 are the high efficiency, electronic inrush current limitation, active input transient filter and wide operational temperature range. The small size is achieved by a synchronous rectification and further technological design details.

The CT10.241-C1 is equipped with conformal coating preferred for applications in harsh areas.

The CT-Series includes all the essential basic functions. The devices also offer PowerBoost: Power reserves of 20%, which may even be used continuously at temperatures up to +45°C. Additionally, the CT10.241 can deliver 3 times the nominal output current for 10ms which helps to trip fuses on faulty output branches.

SHORT-FORM DATA

Output voltage	DC 24V	Nominal
Adjustment range	24 - 28V	Factory setting 24.1V
Output current	10.0 - 8.6A	Up to +60°C ambient
	7.5 – 6.5A	At +70°C ambient
	Derate linearly between +45°C and +70°C	
PowerBoost	12.0A	Up to +45°C ambient
	Linear decrease to nominal power between +45°C and +60°C	
Input voltage AC	3AC 380-480V	-15%/+20%
Mains frequency	50-60Hz	±6%
Input current AC	0.7 / 0.6A	At 3x400 / 480Vac
Power factor	0.53 / 0.52	At 3x400 / 480Vac
AC Inrush current	4 / $4A_{peak}$	At 3x400 / 480Vac
Efficiency	92.8 / 92.9%	At 3x400 / 480Vac
Losses	18.6 / 18.3W	At 3x400 / 480Vac
Hold-up time	34 / 54ms	At 3x400 / 480Vac
Temperature range	-25°C to +70°C	
Size (WxHxD)	62x124x117mm	Without DIN rail
Weight	750g	

ORDER NUMBERS

Power Supply	**CT10.241**	
	CT10.241-C1	Conformal coating
Accessory	ZM1.WALL	Wall/panel mount bracket
	ZM13.SIDE	Side mount bracket

MAIN APPROVALS

For details and the complete approval list, see chapter18.

UL 508 — UL 60950-1 — SEMI F47

Marine — Marine

INDEX

Page

1. Intended Use 3
2. Installation Instructions 3
3. AC-Input....5
4. DC-Input....6
5. Input Inrush Current 6
6. DC Output....7
7. Hold-up Time....8
8. Efficiency and Power Losses....9
9. Functional Diagram....10
10. Front Side and User Elements....10
11. Connection Terminals 11
12. Lifetime Expectancy 12
13. MTBF 12
14. EMC....13
15. Environment....14
16. Safety and Protection Features 15
17. Dielectric Strength 16
18. Approved, Fulfilled or Tested Standards 17
19. Regulatory Product Compliance 18
20. Physical Dimensions and Weight 19
21. Accessories 20
    21.1. ZM1.WALL - Wall/Panel Mount Bracket ..20
    21.2. ZM13.SIDE - Side Mount Bracket 21
    21.3. YRM2.DIODE - Redundancy Modules 22
22. Application Notes.... 23
    22.1. Peak Current Capability 23
    22.2. Output Circuit Breakers....24
    22.3. Charging of Batteries 24
    22.4. Series Operation 25
    22.5. Parallel Use to Increase Output Power....25
    22.6. Parallel Use for Redundancy 26
    22.7. Operation on Two Phases 27
    22.8. Use in a Tightly Sealed Enclosure 28
    22.9. Mounting Orientations 29

The information given in this document is correct to the best of our knowledge and experience at the time of publication. If not expressly agreed otherwise, this information does not represent a warranty in the legal sense of the word. As the state of our knowledge and experience is constantly changing, the information in this data sheet is subject to revision. We therefore kindly ask you to always use the latest issue of this document (available under www.pulspower.com).

No part of this document may be reproduced or utilized in any form without our prior permission in writing.

TERMINOLOGY AND ABBREVIATIONS

PE and ⏚ symbol	PE is the abbreviation for **P**rotective **E**arth and has the same meaning as the symbol ⏚.
Earth, Ground	This document uses the term “earth” which is the same as the U.S. term “ground”.
t.b.d.	To be defined, value or description will follow later.
AC 400V	A figure displayed with the AC or DC before the value represents a nominal voltage with standard tolerances (usually ±15%) included. E.g.: DC 12V describes a 12V battery disregarding whether it is full (13.7V) or flat (10V)
400Vac	A figure with the unit (Vac) at the end is a momentary figure without any additional tolerances included.
50Hz vs. 60Hz	As long as not otherwise stated, AC 380V and AC 400V parameters are valid at 50Hz and AC 480V parameters are valid at 60Hz mains frequency.
may	A key word indicating flexibility of choice with no implied preference.
shall	A key word indicating a mandatory requirement.
should	A key word indicating flexibility of choice with a strongly preferred implementation.

1. INTENDED USE

This device is designed for installation in an enclosure and is intended for commercial use, such as in industrial control, process control, monitoring and measurement equipment or the like.

Do not use this device in equipment, where malfunctioning may cause severe personal injury or threaten human life without additional appropriate safety devices, that are suited for the end-application.

If this device is used in a manner outside of its specification, the protection provided by the device may be impaired.

2. INSTALLATION INSTRUCTIONS

⚠ WARNING Risk of electrical shock, fire, personal injury or death.

- Turn power off before working on the device. Protect against inadvertent re-powering.
- Do not open, modify or repair the device.
- Use caution to prevent any foreign objects from entering the housing.
- Do not use in wet locations or in areas where moisture or condensation can be expected.
- Do not touch during power-on and immediately after power-off. Hot surfaces may cause burns.

Obey the following installation requirements:

This device may only be installed and put into operation by qualified personnel.

This device does not contain serviceable parts. If damage or malfunction should occur during installation or operation, immediately turn power off and send unit to the factory for inspection. The tripping of an internal fuse is caused by an internal defect.

Install device in an enclosure providing protection against electrical, mechanical and fire hazards.

Install the device onto a DIN rail according to EN 60715 with the input terminals on the bottom of the device. Other mounting orientations require a reduction in output current.

Make sure that the wiring is correct by following all local and national codes. Use appropriate copper cables that are designed for a minimum operating temperature of +60°C for ambient temperatures up to +45°C, +75°C for ambient temperatures up to +60°C and +90°C for ambient temperatures up to +70°C. Ensure that all strands of a stranded wire enter the terminal connection. Use ferrules for wires on the input terminals. Unused screw terminals should be securely tightened.

The device is designed for pollution degree 2 areas in controlled environments. No condensation or frost is allowed.

The enclosure of the device provides a degree of protection of IP20. The housing does not provide protection against spilled liquids.

The device is designed for overvoltage category II zones. Below 2000m altitude the device is tested for impulse withstand voltages up to 4kV, which corresponds to OVC III according to IEC 60664-1 (except for corner grounded delta systems).

The device is designed as “Class of Protection I” equipment according to IEC 61140. Do not use without a proper PE (Protective Earth) connection.

The device is suitable to be supplied from TN, TT or IT mains networks. The continuous voltage between the input terminals and the PE potential must not exceed 500Vac. Corner grounded delta systems are allowed.

A disconnecting means shall be provided for the input of the device.

The device is designed for convection cooling and does not require an external fan. Do not obstruct airflow and do not cover ventilation grid!

The device is designed for altitudes up to 5000m. Above 2000m a reduction in output current is required. Keep the following minimum installation clearances: 40mm on top, 20mm on the bottom, 5mm left and right side. Increase the 5mm to 15mm in case the adjacent device is a heat source. When the device is permanently loaded with less than 50%, the 5mm can be reduced to zero.

The device is designed, tested and approved for branch circuits up to 32A (IEC) and 30A (UL) without additional protection device. If an external fuse is utilized, do not use circuit breakers smaller than 6A B- or C-Characteristic to avoid a nuisance tripping of the circuit breaker.

The maximum surrounding air temperature is +70°C. The operational temperature is the same as the ambient or surrounding air temperature and is defined 2cm below the device.

The device is designed to operate in areas between 5% and 95% relative humidity.

The device can also operate on only 2 phases of three-phase mains systems. Use L1 and L2 in such cases. The rated input current will be 1.5A for 380Vac and 1.3A for 480Vac mains voltages.

3. AC-INPUT

The device is suitable to be supplied from TN-, TT- and IT mains networks with AC voltage. Grounding of one phase is allowed except for UL508 applications.

The device can also operate on only two legs of the three-phase system. See chapter 22.7 for more information.

AC input	Nom.	3AC 380-480V	
AC input range		3x 323-576Va	
		3x 576-700Vac	For maximal 1s (occasional)
Allowed voltage L or N to earth	Max.	500Vac	Continuous operation, according to IEC 62477-1
Input frequency	Nom.	50–60Hz	±6%
Turn-on voltage	Typ.	3x 260Vac	Steady-state value, see Fig. 3-1
Shut-down voltage	Typ.	3x 185Vac	Steady-state value, see Fig. 3-1
External input protection	See recommendations in chapter 2.		

		3AC 400V	3AC 480V	
Input current	Typ.	0.7A	0.6A	At 24V, 10A, per phase, see Fig. 3-3
Power factor	Typ.	0.53	0.52	At 24V, 10A, see Fig. 3-4
Start-up delay	Typ.	90ms	90ms	See Fig. 3-2
Rise time	Typ.	40ms	40ms	At 24V, 10A const. current load, 0mF load capacitance, see Fig. 3-2
	Typ.	85ms	85ms	At 24V, 10A const. current load, 10mF load capacitance, see Fig. 3-2
Turn-on overshoot	Max.	200mV	200mV	See Fig. 3-2

Fig. 3-1 **Input voltage range**

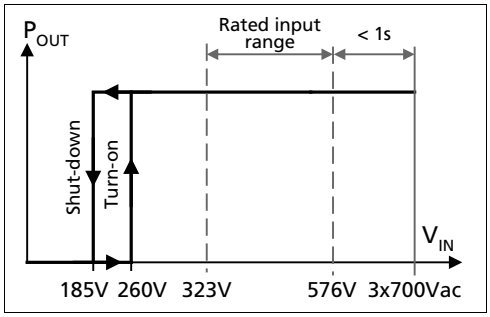

Fig. 3-2 **Turn-on behavior, definitions**

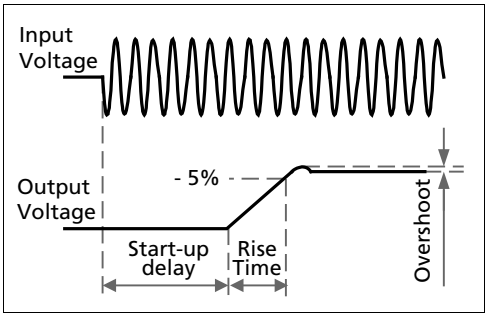

Fig. 3-3 **Input current vs. output load at 24V**

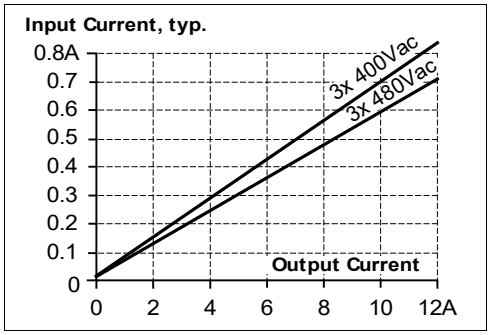

Fig. 3-4 **Power factor vs. output load**

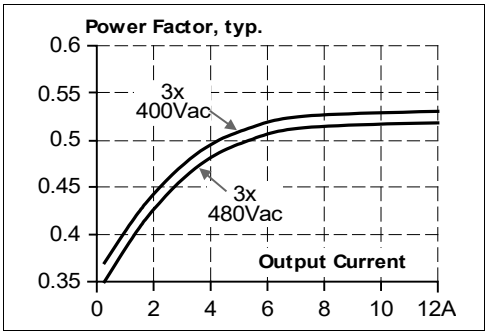

4. DC-INPUT

Do not use the power supply with DC-input voltages.

5. INPUT INRUSH CURRENT

An active inrush limitation circuit limits the input inrush current after turn-on of the input voltage and after short input voltage interruptions.

The charging current into EMI suppression capacitors is disregarded in the first microseconds after switch-on.

		3AC 400V	3AC 480V	
Inrush current	Max.	$10A_{peak}$	$10A_{peak}$	Temperature independent
	Typ.	$4A_{peak}$	$4A_{peak}$	Temperature independent
Inrush energy	Max.	$0.5A^2s$	$0.5A^2s$	Temperature independent

Fig. 5-1 **Typical input inrush current behaviour at nominal load and 25°C ambient**

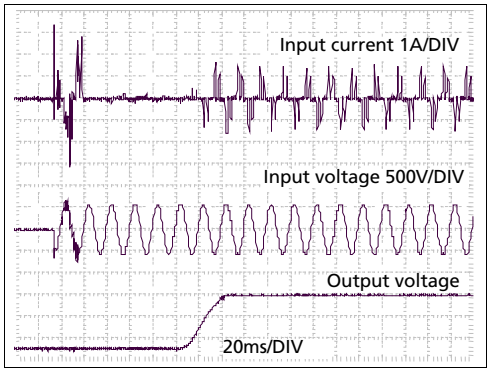

6. DC OUTPUT

The output provides a SELV/PELV rated voltage, which is galvanically isolated from the input voltage.

The device is designed to supply any kind of loads, including unlimited capacitive and inductive loads.

The output is electronically protected against overload, no-load and short-circuits. In case of a protection event, audible noise may occur.

Output voltage	Nom.	24V	
Adjustment range		24-28V	Guaranteed value
	Max.	30V	This is the maximum output voltage which can occur at the clockwise end position of the potentiometer due to tolerances. It is not a guaranteed value which can be achieved.
Factory setting output voltage	Typ.	24.1V	±0.2% in “single use” mode at full load, cold unit
	Typ.	24.1V	±0.2% in “parallel use” mode at 10A, cold unit (results to 23.9V ±0.7% at 12A and 25.0V ±0.2% at no load)
Line regulation	Max.	10mV	Between 3x 323 and 3x 576Vac input voltage change
Load regulation	Max.	100mV	Between 0 and 10A in “single use” mode, static value
	Typ.	1000mV	Between 0 and 10A in “parallel use” mode, static value, see Fig. 6-2
Ripple and noise voltage	Max.	50mVpp	Bandwidth 20Hz to 20MHz, 50Ohm
Output current	Nom.	10A	At 24V and up to +60°C ambient temperature
	Nom.	7.5A	At 24V and +70°C ambient temperature
	Nom.	8.6A	At 28V and up to +60°C ambient temperature
	Nom.	6.5A	At 28V and +70°C ambient temperature
	Derate linearly between +60°C and +70°C, see chapter 15		
PowerBoost[1)]	Nom.	12A	At 24V and up to +45°C ambient temperature
	Nom.	10.3A	At 28V and up to +45°C ambient temperature
	PowerBoost decreases linearly to nominal power between+45°C and+60°C, see chapter 15		
Fuse breaking current	Typ.	23A	Up to 20ms once every five seconds, see Fig. 6-1. The fuse braking current is an enhanced transient current which helps to trip fuses on faulty output branches. The output voltage stays above 40V.
Overload behavior		Continuous current	See Fig. 6-1
Overload/ short-circuit current	Max.	23A	Continuous current, see Fig. 6-1
Output capacitance	Typ.	6 500µF	Included inside the power supply
Back-feeding loads	Max.	35V	The unit is resistant and does not show malfunctioning when a load feeds back voltage to the power supply. It does not matter whether the power supply is on or off. The absorbing energy can be calculated according to the built-in large sized output capacitor.

[1)] **PowerBoost**
This power/current is continuously allowed up to an ambient temperature of +45°C.
Above +45°C, do not use this power/current longer than a duty cycle of 10% and/or not longer than 1 minute every 10 minutes

Fig. 6-1 **Output voltage vs. output current, typ.**

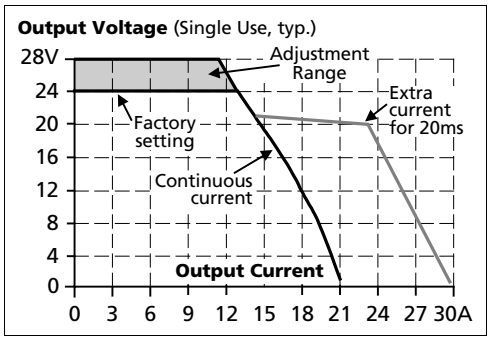

Fig. 6-2 **Output voltage in "parallel use" mode, typ.**

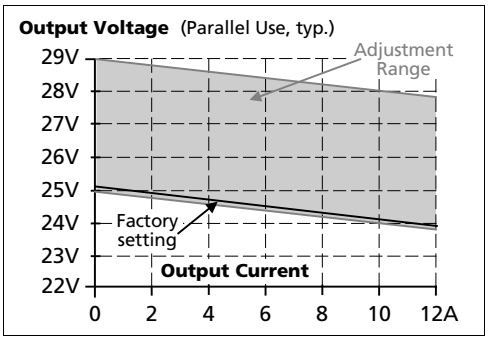

7. HOLD-UP TIME

		3AC 400V	3AC 480V	
Hold-up Time	Typ.	34ms	54ms	At 24V, 10A, see Fig. 7-1
	Typ.	68ms	108ms	At 24V, 5A, see Fig. 7-1
	Min	28ms	44ms	At 24V, 10A, see Fig. 7-1
	Min.	56ms	87ms	At 24V, 5A, see Fig. 7-1

Fig. 7-1 **Hold-up time vs. input voltage**

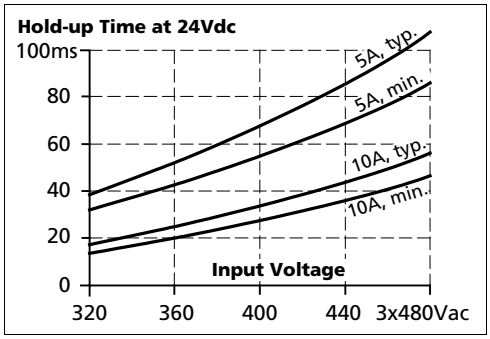

Fig. 7-2 **Shut-down behavior, definitions**

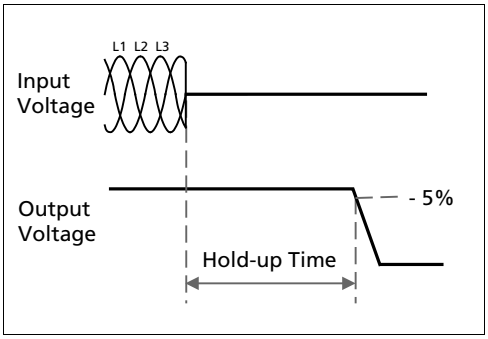

8. EFFICIENCY AND POWER LOSSES

		3AC 400V	3AC 480V	
Efficiency	Typ.	92.8%	92.9%	At 24V, 10A, 3-phase operation
	Typ.	92.4%	92.6%	At 24V, 10A, when using only two legs of a 3-phase system, see also chapter 22.7.
Average efficiency *)	Typ.	92.2%	92.0%	25% at 2.5A, 25% at 5A, 25% at 7.5A. 25% at 10A, 3-phase operation
Power losses	Typ.	2.3W	2.6W	At 0A, 3-phase operation
	Typ.	11.8W	11.8W	At 24V, 5A, 3-phase operation
	Typ.	18.6W	18.3W	At 24V, 10A, 3-phase operation
	Typ.	23.5W	22.8W	At 24V, 12A, 3-phase operation (PowerBoost)

*) The average efficiency is an assumption for a typical application where the power supply is loaded with 25% of the nominal load for 25% of the time, 50% of the nominal load for another 25% of the time, 75% of the nominal load for another 25% of the time and with 100% of the nominal load for the rest of the time.

Fig. 8-1 **Efficiency vs. output current at 24V, typ., 3-phase operation**

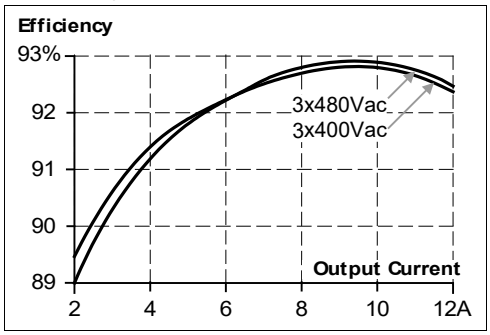

Fig. 8-2 **Losses vs. output current at 24V, typ., 3-phase operation**

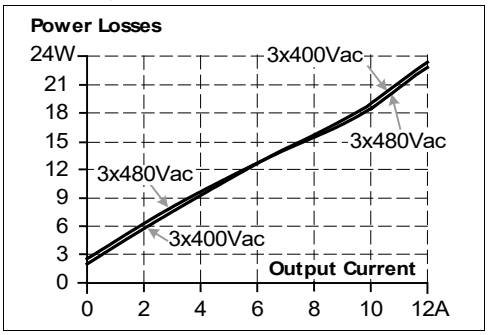

Fig. 8-3 **Efficiency vs. input voltage at 24V, 10A, typ., 3-phase operation**

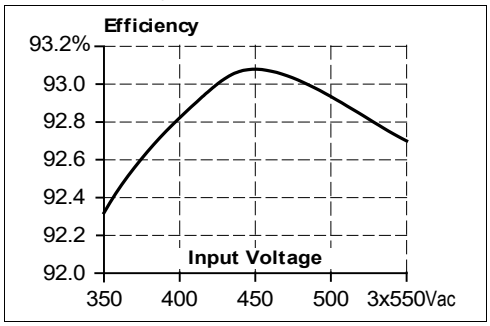

Fig. 8-4 **Losses vs. input voltage at 24V, 10A, typ., 3-phase operation**

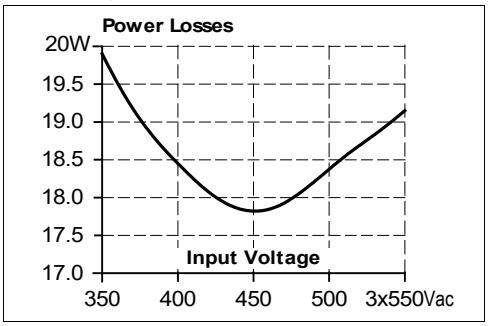

9. FUNCTIONAL DIAGRAM

Fig. 9-1 **Functional diagram**

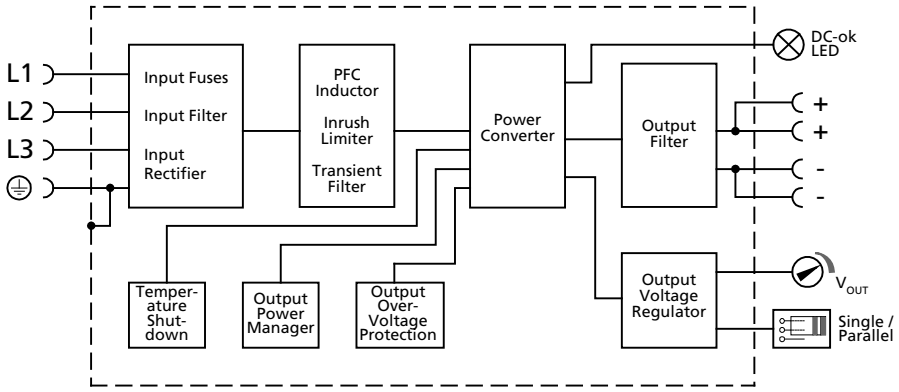

10. FRONT SIDE AND USER ELEMENTS

Fig. 10-1 **Front side**

A Output Terminals

+	Positive output (two identical + poles)
–	Negative/ return output (two identical - poles)

B Input Terminals

L1, L2, L3	Line input
⏚	PE (Protective Earth) input

C Output voltage potentiometer
Open the flap to adjust the output voltage. The factory setting is 24.1V

D Jumper for "Parallel Use" "Single Use"
Set the jumper to "Parallel Use" when devices are connected in parallel to increase the output power. In order to achieve a sharing of the load current between the individual power supplies, the "Parallel Use" regulates the output voltage in such a manner that the voltage at no load is approx. 4% higher than at nominal load.
A missing jumper equals "Single Use" mode, which is also the factory setting.

E DC-OK LED (green)
On, when the output voltage is above 21V.

11. CONNECTION TERMINALS

The terminals are IP20 Finger safe constructed and suitable for field- and factory wiring.

	Input	**Output**
Type	Screw Terminal	Screw Terminal
Solid wire	Max. 6mm²	Max. 6mm²
Stranded wire	Max. 4mm²	Max. 4mm²
American Wire Gauge	AWG 20-10	AWG 20-10
Max. wire diameter (including ferrules)	2.8mm	2.8mm
Recommended tightening torque	1Nm	1Nm
Wire stripping length	7mm	7mm
Screwdriver	3.5mm slotted or Phillips No 1	3.5mm slotted or Phillips No 1

Daisy chaining:

Daisy chaining (jumping from one power supply output to the next) is allowed as long as the average output current through one terminal pin does not exceed 25A. If the current is higher, use a separate distribution terminal block as shown in Fig. 11-2.

Fig. 11-1 **Daisy chaining of outputs**

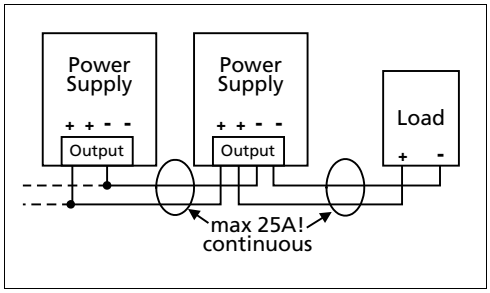

Fig. 11-2 **Using distribution terminals**

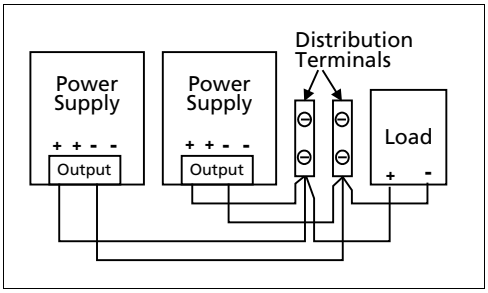

12. LIFETIME EXPECTANCY

The Lifetime expectancy shown in the table indicates the minimum operating hours (service life) and is determined by the lifetime expectancy of the built-in electrolytic capacitors. Lifetime expectancy is specified in operational hours and is calculated according to the capacitor's manufacturer specification. The manufacturer of the electrolytic capacitors only guarantees a maximum life of up to 15 years (131 400h). Any number exceeding this value is a calculated theoretical lifetime which can be used to compare devices.

	3AC 400V	3AC 480V	
Lifetime expectancy	54 000h	62 000h	At 24V, 10A and +40°C, 3-phase operation
	133 000h	134 000h	At 24V, 5A and +40°C, 3-phase operation
	41 000h	47 000h	At 24V, 12A and +40°C, 3-phase operation
	151 000h	176 000h	At 24V, 10A and +25°C, 3-phase operation
	376 000h	379 000h	At 24V, 5A and +25°C, 3-phase operation
	116 000h	133 000h	At 24V, 12A and +25°C, 3-phase operation
Lifetime expectancy	48 000h	58 000h	At 24V, 10A and +40°C, 2-phase operation
	134 000h	145 000h	At 24V, 5A and +40°C, 2-phase operation
	36 000h	42 000h	At 24V, 12A and +40°C, 2-phase operation
	135 000h	164 000h	At 24V, 10A and +25°C, 2-phase operation
	379 000h	410 000h	At 24V, 5A and +25°C, 2-phase operation
	102 000h	119 000h	At 24V, 12A and +25°C, 2-phase operation

13. MTBF

MTBF stands for **M**ean **T**ime **B**etween **F**ailures, which is calculated according to statistical device failures, and indicates reliability of a device. It is the statistical representation of the likelihood of a unit to fail and does not necessarily represent the life of a product.

The MTBF figure is a statistical representation of the likelihood of a device to fail. A MTBF figure of e.g. 1 000 000h means that statistically one unit will fail every 100 hours if 10 000 units are installed in the field. However, it can not be determined if the failed unit has been running for 50 000h or only for 100h.

For these types of units the MTTF (**M**ean **T**ime **T**o **F**ailure) value is the same value as the MTBF value.

	3AC 400V	3AC 480V	
MTBF SN 29500, IEC 61709	975 000h	985 000h	At 24V, 10A and +40°C, 3-phase operation
	1 706 000h	1 723 000h	At 24V, 10A and +25°C, 3-phase operation
	925 000h	939 000h	At 24V, 10A and +40°C, 2-phase operation
	1 633 000h	1 656 000h	At 24V, 10A and +25°C, 2-phase operation
MTBF MIL HDBK 217F	444 000h	428 000h	At 24V, 10A and +40°C, 3-phase Ground Benign GB40
	584 000h	563 000h	At 24V, 10A and +25°C, 3-phase Ground Benign GB25
	100 000h	100 000h	At 24V, 10A and +40°C, 3-phase Ground Fixed GF40
	132 000h	132 000h	At 24V, 10A and +25°C, 3-phase Ground Fixed GF25
	436 000h	423 000h	At 24V, 10A and +40°C, 2-phase Ground Benign GB40
	555 000h	572 000h	At 24V, 10A and +25°C, 2-phase Ground Benign GB25
	98 000h	98 000h	At 24V, 10A and +40°C, 2-phase Ground Fixed GF40
	129 000h	129 000h	At 24V, 10A and +25°C, 2-phase Ground Fixed GF25

14. EMC

The EMC behavior of the device is designed for applications in industrial environment as well as in residential, commercial and light industry environments. The output is allowed to be grounded or floating.

The device is investigated according to the generic standards EN 61000-6-1, EN 61000-6-2, EN 61000-6-3 and EN 61000-6-4.

Without additional measures to reduce the conducted emissions on the output (e.g. by using a filter), the device is not suited to supply a local DC power network in residential, commercial and light-industrial environments. No restrictions apply for local DC power networks in industrial environments.

EMC Immunity

Electrostatic discharge	EN 61000-4-2	Contact discharge Air discharge	8kV 15kV	Criterion A Criterion A
Electromagnetic RF field	EN 61000-4-3	80MHz-2.7GHz	10V/m	Criterion A
Fast transients (Burst)	EN 61000-4-4	Input lines Output lines	4kV 2kV	Criterion A Criterion A
Surge voltage on input	EN 61000-4-5	L1 → L2, L2 → L3, L1 → L3 L1 / L2 / L3 → PE	2kV 4kV	Criterion A Criterion A
Surge voltage on output	EN 61000-4-5	+ → - + / - → PE	500V 1kV	Criterion A Criterion A
Conducted disturbance	EN 61000-4-6	0.15-80MHz	10V	Criterion A
Mains voltage dips (Dips on three phases)	EN 61000-4-11	0% of 380Vac 0% of 480Vac	0Vac, 20ms 0Vac, 20ms	Criterion A Criterion A
Mains voltage dips (Dips on two phases)	EN 61000-4-11	40% of 380Vac 40% of 480Vac 70% of 380Vac 70% of 480Vac	200ms 200ms 500ms 500ms	Criterion A Criterion A Criterion A Criterion A
Voltage interruptions	EN 61000-4-11		5s	Criterion C
Powerful transients	VDE 0160	Over entire load range	1550V, 1.3ms	Criterion A

Criterions:
A: The device shows normal operation behavior within the defined limits.
C: Temporary loss of function is possible. The device may shut down and restarts by itself. No damage or hazards for the device will occur.

EMC Emission

Conducted emission input lines	EN 55011, EN 55032, FCC Part 15, CISPR 11, CISPR 32	Class B
Radiated emission	EN 55011, EN 55032	Class B
Harmonic input current	EN 61000-3-2	Fulfilled for Class A equipment
Voltage fluctuations, flicker	EN 61000-3-3	Fulfilled, tested with constant current loads, non pulsing

This device complies with FCC Part 15 rules.
Operation is subjected to following two conditions: (1) this device may not cause harmful interference, and (2) this device must accept any interference received, including interference that may cause undesired operation.

Switching Frequency

Main converter	60kHz to 140kHz	Output load and input voltage dependent

15. ENVIRONMENT

Operational temperature	-25°C to +70°C	The operational temperature is the ambient or surrounding temperature and is defined as the air temperature 2cm below the device.
Storage temperature	-40°C to +85°C	For storage and transportation
Output derating	6W/K 15W/1000m or 5K/1000m 9W/-5kPa or 3°C/-5kPa	Between +60°C and +70°C For altitudes >2000m, see Fig. 15-2 For atmospheric pressures <80kPa, see Fig. 15-2
	The derating is not hardware controlled. The customer has to take care by himself to stay below the derated current limits in order not to overload the unit.	
Humidity	5 to 95% r.h.	According to IEC 60068-2-30
Atmospheric pressure	110-47kPa	See Fig. 15-2 for details
Altitude	Up to 6000m	See Fig. 15-2 for details
Overvoltage category	III	According to IEC 60664-1 for altitudes up to 2000m
	II	According to IEC 60664-1 for altitudes from 2000 to 6000m and atmospheric pressures from 80 to 47kPa
Degree of pollution	2	According to IEC 62477-1, not conductive
Vibration sinusoidal	2-17.8Hz: ±1.6mm; 17.8-500Hz: 2g 2 hours / axis	According to IEC 60068-2-6
Shock	30g 6ms, 20g 11ms 3 bumps / direction, 18 bumps in total	According to IEC 60068-2-27
	Shock and vibration is tested in combination with DIN rails according to EN 60715 with a height of 15mm and a thickness of 1.3mm and standard orientation.	
Audible noise	Some audible noise may be emitted from the power supply during no load, overload or short circuit.	

Fig. 15-1 **Output current vs. ambient temp. (Inom = 10A; Iout with PowerBoost = 12A)**

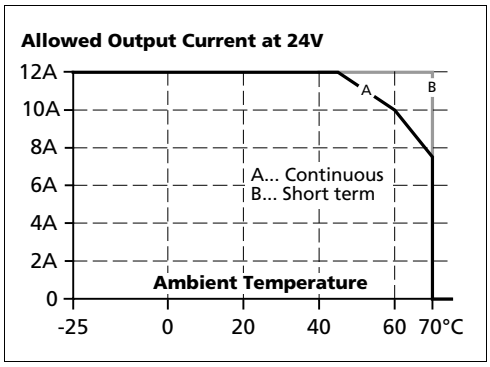

Fig. 15-2 **Output current vs. altitude at 24V**

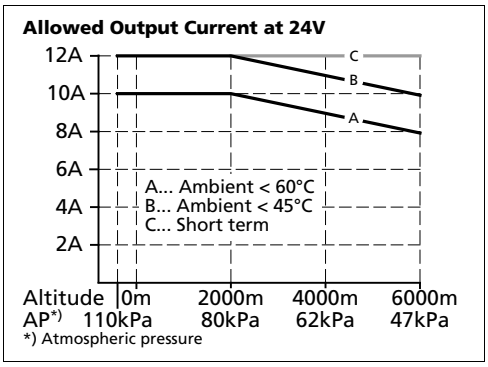

16. SAFETY AND PROTECTION FEATURES

Isolation resistance	Min.	500MOhm	At delivered condition between input and output, measured with 500Vdc
	Min.	500MOhm	At delivered condition between input and PE, measured with 500Vdc
	Min.	500MOhm	At delivered condition between output and PE, measured with 500Vdc
	Min.	500MOhm	At delivered condition between output and DC-OK contacts, measured with 500Vdc
PE resistance	Max.	0.1Ohm	Resistance between PE terminal and the housing in the area of the DIN rail mounting bracket.
Output overvoltage protection	Typ.	30.5Vdc	
	Max.	32Vdc	
		In case of an internal defect, a redundant circuit limits the maximum output voltage. The output shuts down and automatically attempts to restart.	
Class of protection		I	According to IEC 61140 A PE (Protective Earth) connection is required
Degree of protection		IP 20	According to EN/IEC 60529
Overtemperature protection		Included	Output shuts down with automatic restart. Temperature sensors are installed on critical components inside the unit and turn the unit off in safety critical situations, which can happen e.g. when ambient temperature is too high, ventilation is obstructed or the derating requirements are not followed. There is no correlation between the operating temperature and turn-off temperature since this is dependent on input voltage, load and installation methods.
Input transient protection		MOV (Metal Oxide Varistor)	For protection values see chapter 14 (EMC).
Internal input fuse		Included	Not user replaceable slow-blow high-braking capacity fuse
Touch current (leakage current)	Typ.	0.17mA	At 3x 400Vac, 50Hz, TN-,TT-mains
	Typ.	0.24mA	At 3x 480Vac, 60Hz, TN-,TT-mains
	Max.	0.22mA	At 3x 440Vac, 60Hz, TN-,TT-mains
	Max.	0.31mA	At 3x 528Vac, 50Hz, TN-,TT-mains

17. DIELECTRIC STRENGTH

The output voltage is floating and has no ohmic connection to the ground.

The output is insulated to the input by a double or reinforced insulation.

Type and routine tests are conducted by the manufacturer. Field tests may be conducted in the field using the appropriate test equipment which applies the voltage with a slow ramp (2s up and 2s down). Connect all input-terminals together as well as all output poles before conducting the test. When testing, set the cut-off current settings to the value in the table below.

Fig. 17-1 **Dielectric strength**

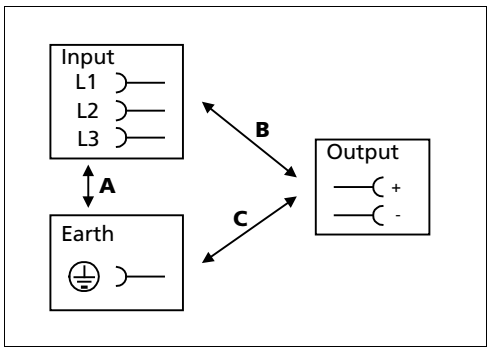

		A	B	C
Type test	60s	2500Vac	3000Vac	500Vac
Routine test	5s	2500Vac	2500Vac	500Vac
Field test	5s	2000Vac	2000Vac	500Vac
Cut-off current setting for field test		> 10mA	> 10mA	> 30mA

It is recommend that either the + pole, the – pole or any other part of the output circuit shall be connected to the earth/ground system. This helps to avoid situations in which a load starts unexpectedly or can not be switched off when unnoticed earth faults occur.

18. APPROVED, FULFILLED OR TESTED STANDARDS

UL 508		UL Certificate Listed equipment for category NMTR - Industrial Control Equipment Applicable for US and Canada E-File: E198865
IEC 61010-2-201		Manufacturer's Declaration Electrical Equipment for Measurement, Control and Laboratory Use - Particular requirements for control equipment
IEC 60950-1		CB Scheme Certificate General safety requirements for Information Technology Equipment (ITE)
UL 60950-1		UL Certificate Recognized component for category QQGQ - Information Technology Equipment (ITE) Applicable for US and Canada E-File: E137006
Marine (DNV)		DNV Certificate DNV Type approved product Certificate: TAA00002YX
Marine (ABS)		ABS Design Assessment Certificate ABS (American Bureau of Shipment) assessed product Certificate: 22-2231447-PDA
SEMI F47		Test Report Voltage Sag Immunity for Semiconductor Processing Equipment Tested for AC 208V L-L or L-N mains voltages, nominal output voltage and nominal output load
VDMA 24364		Paint Wetting Impairment Substances Test (or LABS-Test) Tested for Zone 2 and test class C1 according to VDMA 24364-C1-L/W for solvents and water-based paints

19. REGULATORY PRODUCT COMPLIANCE

EU Declaration of Conformity	CE	The CE mark indicates conformance with the - EMC directive - Low-voltage directive - RoHS directive
REACH Regulation (EU)	REACH ✓	Manufacturer's Declaration EU regulation regarding the Registration, Evaluation, Authorisation and Restriction of Chemicals (REACH) fulfilled. EU Regulation (EC) 1907/2006.
WEEE Directive (2012/19/EU)		Manufacturer's Statement EU-Directive on Waste Electrical and Electronic Equipment (WEEE) Registered in Germany as business to business (B2B) products. WEEE-Reg.-Nr. DE 55837529
KC Koran Certificate (CT10.241)	KC	KC Korean Certification Korean - Registration of Broadcasting and Communication Equipment Registered under Clause3, Article 58-2 of Radio Waves Act. Registration No. R-R-PUG-CT10_241

20. PHYSICAL DIMENSIONS AND WEIGHT

Width	62mm
Height	124mm
Depth	117mm The DIN rail depth must be added to the unit depth to calculate the total required installation depth.
Weight	750g
DIN rail	Use 35mm DIN rails according to EN 60715 or EN 50022 with a height of 7.5 or 15mm.
Housing material	Body: Aluminium alloy Cover: Zinc-plated steel
Installation clearances	See chapter 2
Penetration protection	Small parts like screws, nuts, etc. with a diameter larger than 3.5mm

Fig. 20-1 **Front view**

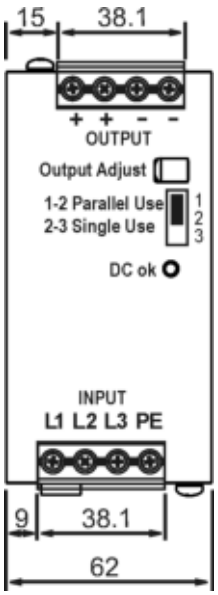

All dimensions in mm

Fig. 20-2 **Side view**

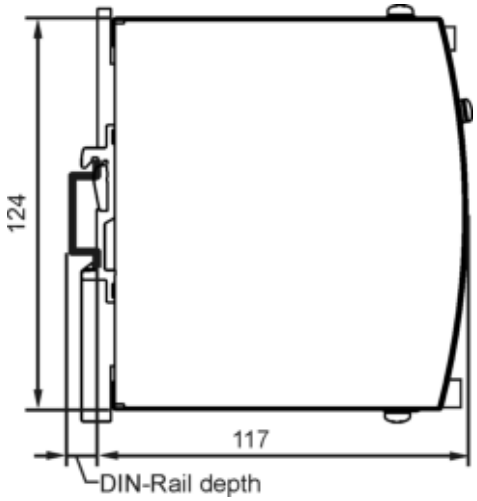

All dimensions in mm

21. ACCESSORIES

21.1. ZM1.WALL - WALL/PANEL MOUNT BRACKET

These brackets are used to mount the device on a flat surface or panel without utilizing a DIN rail.

The two aluminum brackets and the black plastic slider of the unit have to be detached, so that the steel brackets can be mounted in the holes of the aluminum brackets.

The order number ZM1.WALL contains two brackets needed for one device.

Fig. 21-1 **ZM1.Wall**

Fig. 21-2 **Hole pattern**

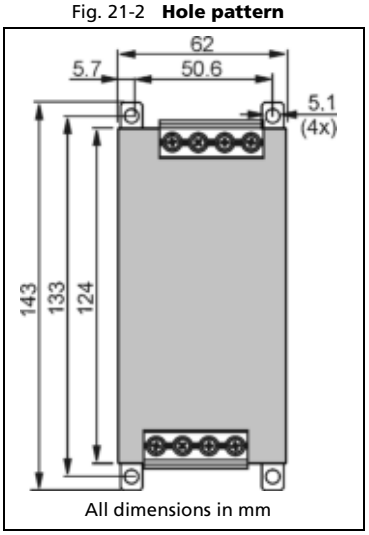

Fig. 21-3 **Side view**

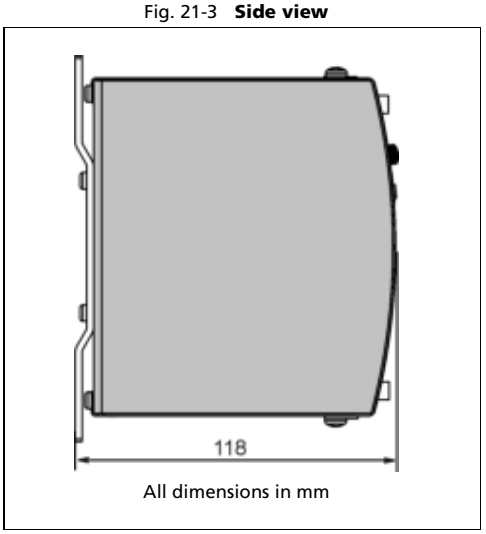

Fig. 21-4 **Isometric view**

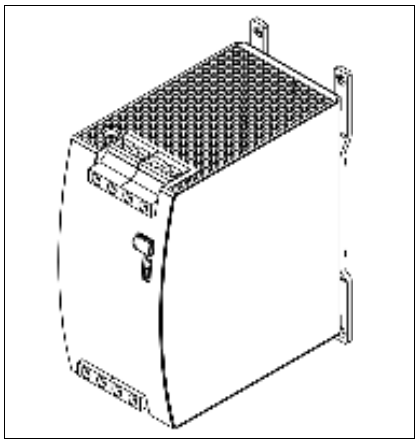

Fig. 21-5 **Isometric view**

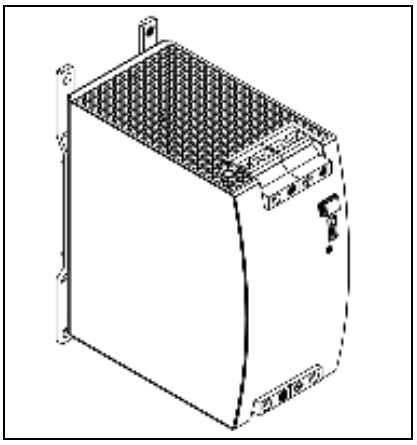

Fig. 21-6 **Isometric view**

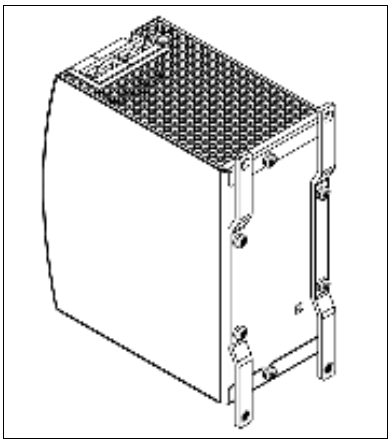

21.2. ZM13.SIDE - SIDE MOUNT BRACKET

This ZM13.SIDE bracket is used to mount the device sideways with or without utilizing a DIN rail to save installation depth.

The two aluminum brackets and the black plastic slider of the unit have to be detached, so that the ZM13.SIDE steel bracket can be mounted.

For sideway DIN rail mounting, the removed aluminum brackets and the black plastic slider need to be mounted on the ZM13.SIDE steel bracket.

Fig. 21-7 **ZM13.SIDE**

Fig. 21-8
Mounting instructions

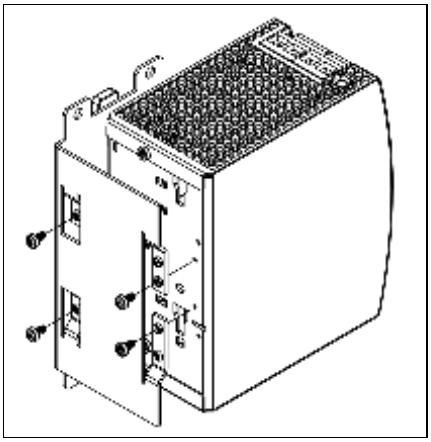

Fig. 21-9
Side mounting without DIN rail brackets

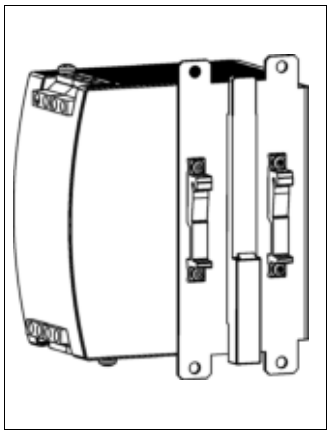

Fig. 21-10
Side mounting with DIN rail brackets

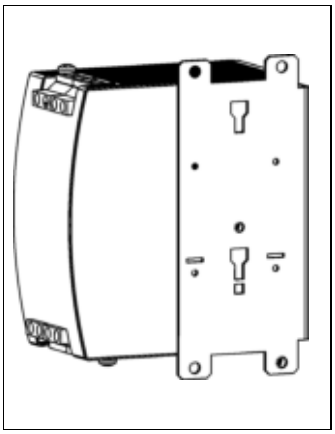

Fig. 21-11
Hole pattern

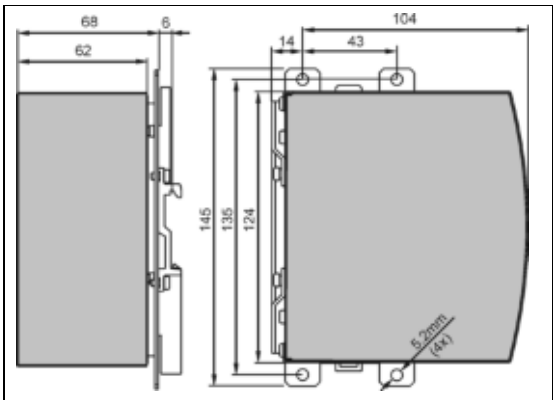

All dimensions in mm

21.3. YRM2.DIODE - REDUNDANCY MODULES

The YRM2.DIODE is a dual redundancy module, which can be used to build 1+1 or N+1 redundant systems.

The device is equipped with two input channels each 10A nominal, which are individually decoupled by utilizing diode technology. The output can be loaded with nominal 20A.

The device does not require an additional auxiliary voltage and is self-powered even in case of a short circuit across the output.

The device has a monitoring circuit included and is the perfect choice when the power supply has no DC-OK function. Two LEDs and two relay contacts signal when one of the two input voltages is not in range due to a non-functioning or disconnected power supply.

The unit is very slender and only requires 32mm width on the DIN rail.

See chapter 22.6 for wiring information.

22. APPLICATION NOTES

22.1. PEAK CURRENT CAPABILITY

The unit can deliver peak currents (up to several milliseconds) which are higher than the specified short term currents.

This helps to start current demanding loads. Solenoids, contactors and pneumatic modules often have a steady state coil and a pick-up coil. The inrush current demand of the pick-up coil is several times higher than the steady-state current and usually exceeds the nominal output current (including the PowerBoost). The same situation applies when starting a capacitive load.

The peak current capability also ensures the safe operation of subsequent circuit breakers of load circuits. The load branches are often individually protected with circuit breakers or fuses. In case of a short or an overload in one branch circuit, the fuse or circuit breaker need a certain amount of overcurrent to open in a timely manner. This avoids voltage loss in adjacent circuits.

The extra current (peak current) is supplied by the power converter and the built-in large sized output capacitors of the power supply. The capacitors get discharged during such an event, which causes a voltage dip on the output. The following examples show typical voltage dips for resistive loads:

Fig. 22-1 **20A peak current for 50ms, typ. (2x the nominal current)**

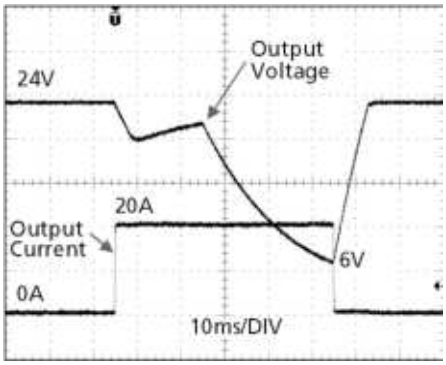

Fig. 22-2 **50A peak current for 5ms, typ. (5x the nominal current)**

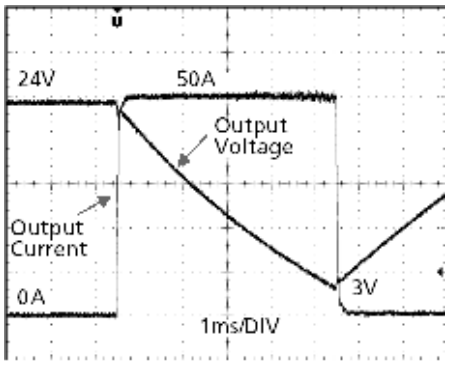

Peak current voltage dips	Typ.	from 24V to 6V	At 20A for 50ms, resistive load
	Typ.	from 24V to 12V	At 50A for 2ms, resistive load
	Typ.	from 24V to 3V	At 50A for 5ms, resistive load

22.2. OUTPUT CIRCUIT BREAKERS

Standard miniature circuit breakers (MCB's or UL 1077 circuit breakers) are commonly used for AC-supply systems and may also be used on 24V branches.

MCB's are designed to protect wires and circuits. If the ampere value and the characteristics of the MCB are adapted to the wire size that is used, the wiring is considered as thermally safe regardless of whether the MCB opens or not.

To avoid voltage dips and under-voltage situations in adjacent 24V branches which are supplied by the same source, a fast (magnetic) tripping of the MCB is desired. A quick shutdown within 10ms is necessary corresponding roughly to the ride-through time of PLC's. This requires power supplies with high current reserves and large output capacitors. Furthermore, the impedance of the faulty branch must be sufficiently small in order for the current to actually flow. The best current reserve in the power supply does not help if Ohm's law does not permit current flow. The following table has typical test results showing which B- and C-Characteristic MCBs magnetically trip depending on the wire cross chapter and wire length.

The following test results indicate the maximal wire length for a magnetic (fast) tripping. The wire length is always two times the distance to the load (+ and – wire).

Fig. 22-3 **Test circuit for maximum wire length**

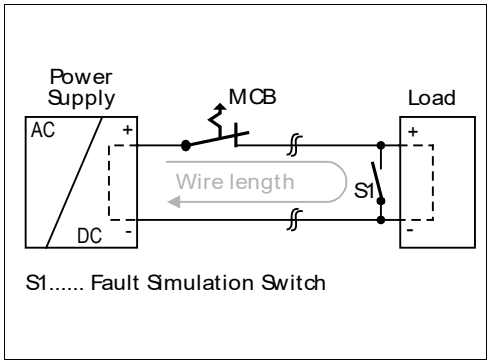

Test results for maximum wire length:

	0.75mm²	1.0mm²	1.5mm²	2.5mm²
C-2A	23m	28m	43m	69m
C-3A	18m	23m	34m	54m
C-4A	6m	12m	18m	28m
C-6A	3m	4m	6m	7m
C-8A	2m	3m	4m	5m
C-10A	1m	2m	3m	4m
B-6A	9m	14m	19m	33m
B-10A	4m	5m	6m	9m
B-13A	3m	4m	5m	8m

22.3. CHARGING OF BATTERIES

The power supply can be used to charge lead-acid or maintenance free batteries. Two 12V SLA or VRLA batteries are needed in series connection.

Instructions for charging batteries:

a) Ensure that the ambient temperature of the power supply stays below 45°C.

b) Set the output voltage, measured at no load and at the battery end of the cable, very precisely to the end-of-charge voltage.

End-of-charge voltage	27.8V	27.5V	27.15V	26.8V
Battery temperature	10°C	20°C	30°C	40°C

c) Use a 16A circuit breaker or a blocking diode between the power supply and the battery.

d) Ensure that the output current of the power supply is below the allowed charging current of the battery.

e) Use only matched batteries when putting 12V types in series.

f) The return current to the power supply is typically 8mA. This return current can discharge the battery when the power supply is switched off except in case a blocking diode is utilized.

22.4. SERIES OPERATION

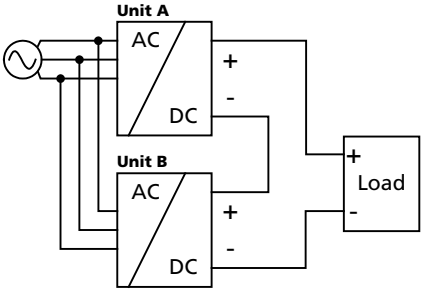

Devices of the same type can be connected in series for higher output voltages. It is possible to connect as many units in series as needed, providing the sum of the output voltage does not exceed 150Vdc. Voltages with a potential above 60Vdc must be installed with a protection against touching.

Avoid return voltage (e.g. from a decelerating motor or battery) which is applied to the output terminals.

Keep an installation clearance of 15mm (left / right) between two power supplies and avoid installing the power supplies on top of each other. Do not use power supplies in series in mounting orientations other than the standard mounting orientation.

Pay attention that leakage current, EMI, inrush current, harmonics will increase when using multiple devices.

22.5. PARALLEL USE TO INCREASE OUTPUT POWER

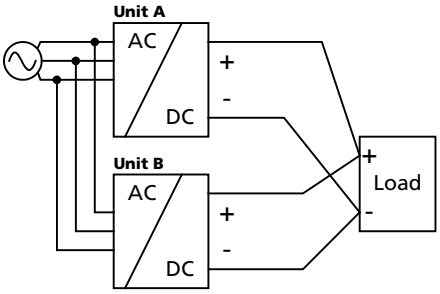

Devices can be paralleled to increase the output power. The output voltage of all devices shall be adjusted to the same value (±100mV) in “Single Use” mode with the same load conditions on all units, or the units can be left with the factory settings. After the adjustments, set the unit to “Parallel Use” mode, in order to achieve load sharing. The “Parallel Use” mode regulates the output voltage in such a manner that the voltage at no load is approx. 4% higher than at nominal load.

The ambient temperature is not allowed to exceed +60°C.

If more than three units are connected in parallel, a fuse or circuit breaker with a rating of 15A or 16A is required on each output. Alternatively, a diode or redundancy module can also be utilized.

Keep an installation clearance of 15mm (left / right) between two devices and avoid installing devices on top of each other. Do not use devices in parallel in mounting orientations other than the standard mounting orientation or in any other condition where a reduction of the output current is required (e.g. altitude).

Pay attention that leakage current, EMI, inrush current, harmonics will increase when using multiple devices.

22.6. PARALLEL USE FOR REDUNDANCY

1+1 Redundancy:
Devices can be paralleled for redundancy to gain higher system availability. Redundant systems require a certain amount of extra power to support the load in case one device fails. The simplest way is to put two devices in parallel. This is called a 1+1 redundancy. In case one device fails, the other one is automatically able to support the load current without any interruption. It is essential to use a redundancy module to decouple devices from each other. This prevents that the defective unit becomes a load for the other device and the output voltage cannot be maintained any more.

For 1+1 redundancy the ambient temperature is not allowed to exceed +70°C.

Recommendations for building redundant power systems:

- Use separate input fuses for each device.
- Use separate mains systems for each device whenever it is possible.
- Monitor the outputs of the individual devices. Use the DC-OK contact, which is included in the redundancy module.
- It is desirable to set the output voltages of all devices to the same value (± 100mV) or leave it at the factory setting.
- Set the devices into "Parallel Use" mode.

Pay attention that leakage current, EMI, inrush current, harmonics will increase when using multiple devices.

N+1 Redundancy:
Redundant systems for a higher power demand are usually built in a N+1 method. E.g. four devices, each rated for 10A are paralleled to build a 30A redundant system.

Pay attention that leakage current, EMI, inrush current, harmonics will increase when using multiple devices.

Keep an installation clearance of 15mm (left / right) between two devices and avoid installing the devices on top of each other.
Do not use devices in parallel in mounting orientations other than the standard mounting orientation or in any other condition, where a reduction of the output current is required.

For 1+1 redundancy the ambient temperature is not allowed to exceed +60°C.

Wiring examples for 1+1 and n+1 redundancy:

Fig. 22-4 **1+1 Redundant configuration for 10A load current and redundancy modules**

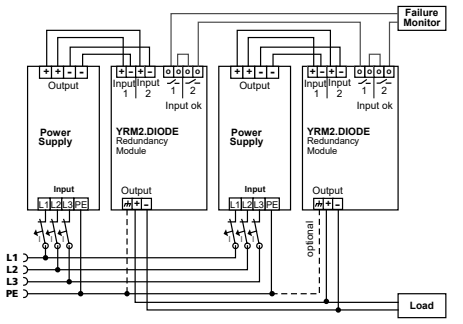

Fig. 22-5 **N+1 Redundant configuration for 30A load current with multiple power supplies and redundancy modules**

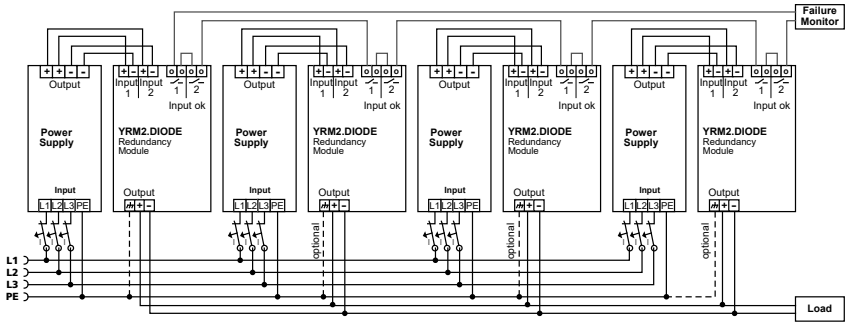

22.7. OPERATION ON TWO PHASES

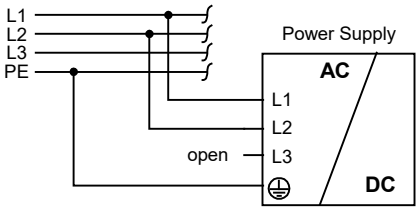

No external protection device is required to protect against a phase-loss failure.

The power supply is allowed to run permanently on only two legs of a 3-phase system, when the output power is reduced according to the curves below. A long-term exceeding of these limits will result in a thermal shut-down of the device.

Pay attention that EMC performance, hold-up time and losses differ from a three phase operation. Therefore, check suitability of your individual application.

Using only two legs of a 3-phase system is only included in the IEC/UL 60950-1 approval.

Fig. 22-6 **Allowed output current for use on only two legs of a 3-phase system**

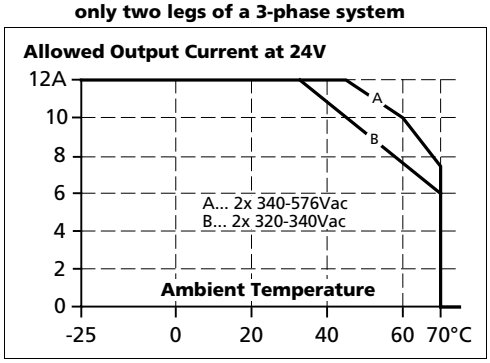

Fig. 22-7 **Hold-up time for use on only two legs of a 3-phase system**

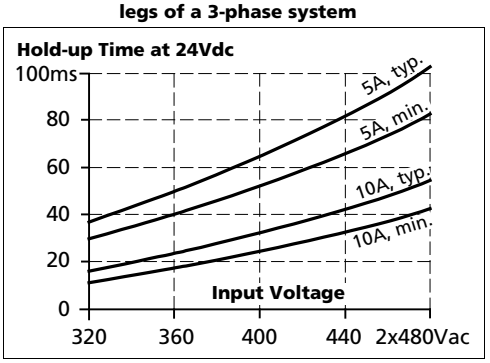

Fig. 22-8 **Efficiency vs. output current at 24V for use on only two legs of a 3-phase system**

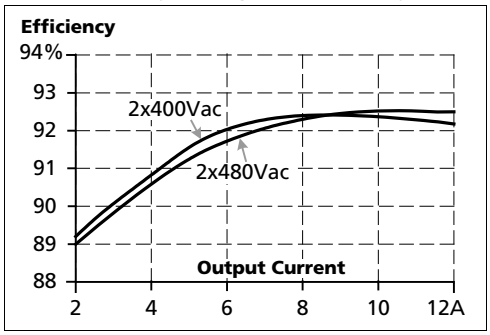

Fig. 22-9 **Losses vs. output current at 24V for use on only two legs of a 3-phase system**

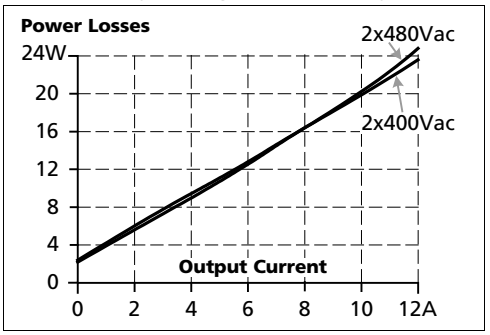

22.8. USE IN A TIGHTLY SEALED ENCLOSURE

When the device is installed in a tightly sealed enclosure, the temperature inside the enclosure will be higher than outside. In such situations, the inside temperature defines the ambient temperature for the device.

In the following test setup, the device is placed in the middle of the box, no other heat producing items are inside the box. The load is placed outside the box.

The temperature sensor inside the box is placed in the middle of the right side of the power supply with a distance of 1cm.
The following measurement results can be used as a reference to estimate the temperature rise inside the enclosure.

	Case A	**Case B**
Enclosure size	180x180x165mm Rittal Typ IP66 Box PK 9519 100, plastic	180x180x165mm Rittal Typ IP66 Box PK 9519 100, plastic
Input voltage	3x 400Vac	3x 400Vac
Load	24V, 8A; (=**80%**)	24V, 10A; (=**100%**)
Temperature inside the box	48.4°C	54.7°C
Temperature outside the box	24.5°C	24.9°C
Temperature rise	23.9K	29.8K

22.9. MOUNTING ORIENTATIONS

Mounting orientations other than input terminals on the bottom and output on the top require a reduction in continuous output power or a limitation in the maximum allowed ambient temperature.

The listed lifetime and MTBF values from this datasheet apply only for the standard mounting orientation.

The following curves give an indication for allowed output currents for altitudes up to 2000m.

Fig. 22-10
Mounting Orientation A
(Standard orientation)

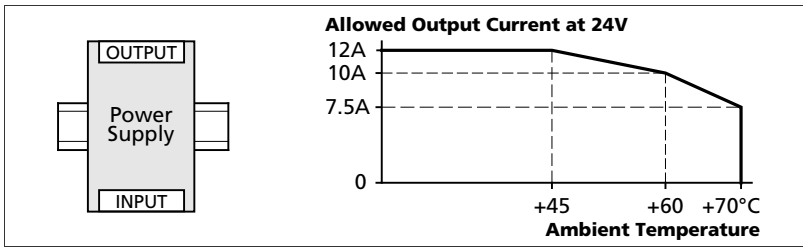

Fig. 22-11
Mounting Orientation B
(Upside down)

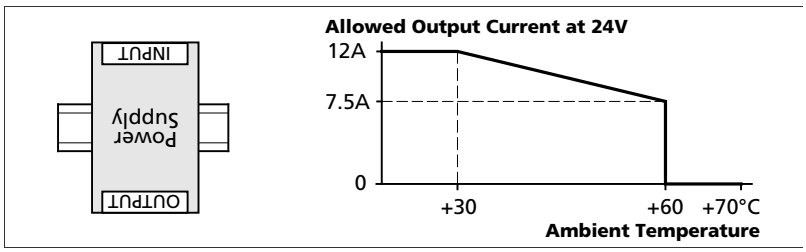

Fig. 22-12
Mounting Orientation C
(Table-top mounting)

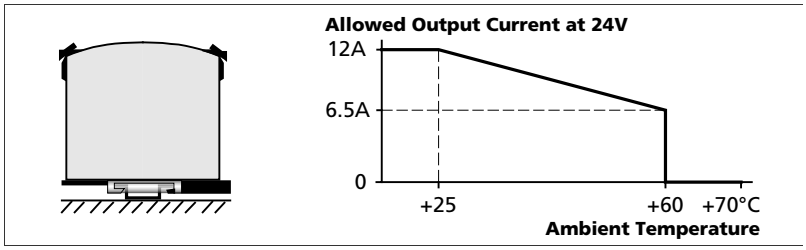

Fig. 22-13
Mounting Orientation D
(Horizontal cw)

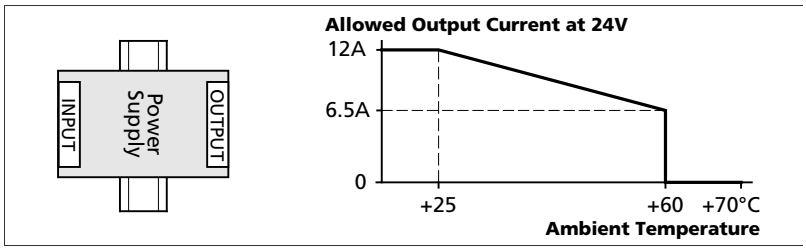
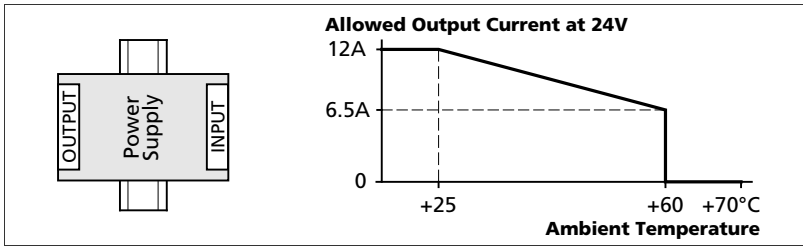
Fig. 22-14
Mounting Orientation E
(Horizontal ccw)