POWER SUPPLY

- AC 100-240V wide-range Input
- Width only 39mm
- +10% (5.4A) continuous current up to +60°C
- +20% (6A) continuous current up to +45°C (PowerBoost)
- Efficiency up to 95.5%
- Excellent partial load efficiency
- Safe Hiccup^{PLUS} overload mode
- Active power factor correction (PFC)
- Minimal inrush current surge
- Full power between -25°C and +60°C
- DC-OK relay contact
- 3 year warranty

PRODUCT DESCRIPTION

The DIMENSION CP-Series units are high-end power supplies in a medium price range without compromising quality, reliability and performance. The CP-Series is part of the DIMENSION power supply family. The most outstanding features of CP10.481 are the high efficiency, advanced inrush current limitation, active PFC and the wide operational temperature range.

The CP-Series includes all the essential basic functions. The devices also offer PowerBoost: Power reserves of 20%, which may even be used continuously at temperatures up to +45°C. Additionally, the CP10 can deliver three times the nominal output current for at least 12ms which helps to trip fuses on faulty output branches.

High immunity to transients and power surges as well as low electromagnetic emission, a DC-OK relay contact and a large international approval package for a variety of applications makes this unit suitable for nearly every situation.

SHORT-FORM DATA

Output voltage	DC 48V	Nominal
Adjustment range	48 – 56V	Factory setting 48.0V
Output current	5.4-4.6A	Up to +60°C ambient
	4.0-3.4A	At +70°C ambient
	Derate linearly between +60°C and +70°C	
PowerBoost	6.0	Up to +45°C ambient
	Linear decrease to nominal power between +45°C and +60°C	
Input voltage AC	AC 100-240V	±10%
Mains frequency	50-60Hz	±6%
Input current AC	2.32 / 1.20A	At 120 / 230Vac
Power factor	0.99 / 0.98	At 120 / 230Vac
Input voltage DC	DC 110-150V	±20%
Input current DC	2.51A	At 110Vdc
Reduce output current to 5-4.3A (48-56V) below 93.5Vdc		
AC Inrush current	6 / 9A pk	At +40°C 120/230Vac
Efficiency	93.8 / 95.5%	At 120 / 230Vac
Losses	17.2 / 12.3W	At 120 / 230Vac
Hold-up time	34 / 34ms	At 120 / 230Vac
Temperature range	-25°C to +70°C	
Size (w x h x d)	39x124x117mm	Without DIN rail
Weight	600g	

ORDER NUMBERS

Power Supply	**CP10.481**	
Accessory	ZM10.WALL	Wall/panel mount bracket
	ZM12.SIDE	Side mount bracket

MAIN APPROVALS

For details and the complete approval list, see chapter 20.

UL 508	UL 60950-1	ATEX
IECEx	Class I Div 2	Marine

INDEX

Page
1. Intended Use 3
2. Installation Instruction 3
3. AC-Input 5
4. DC-Input 6
5. Input Inrush Current 7
6. Output 8
7. Hold-up Time 9
8. DC-OK Relay Contact 10
9. Efficiency and Power Losses 11
10. Lifetime Expectancy 12
11. MTBF 12
12. Functional Diagram 13
13. Terminals and Wiring 14
14. Front Side and User Elements 15
15. EMC 16
16. Environment 17
17. Protection Features 18
18. Safety Features 18
19. Dielectric Strength 19
20. Approved, Fulfilled or Tested Standards 20
21. Regulatory Product Compliance 22
22. Physical Dimensions and Weight 23
23. Accessories 24
23.1. ZM10.WALL - Wall/Panel Mount Bracket 24
23.2. ZM12.SIDE - Side Mounting Bracket 25
23.3. YR2.DIODE - Redundancy Module 26
23.4. YR40.482 - Redundancy Module 26
24. Application Notes 27
24.1. Peak Current Capability 27
24.2. Back-feeding Loads 28
24.3. External Input Protection 28
24.4. Output Circuit Breakers 28
24.5. Parallel Use to Increase Output Power 29
24.6. Parallel Use for Redundancy 29
24.7. Series Operation 30
24.8. Inductive and Capacitive Loads 30
24.9. Charging of Batteries 30
24.10. Operation on Two Phases 31
24.11. Use in a Tightly Sealed Enclosure 31
24.12. Mounting Orientations 32

The information given in this document is correct to the best of our knowledge and experience at the time of publication. If not expressly agreed otherwise, this information does not represent a warranty in the legal sense of the word. As the state of our knowledge and experience is constantly changing, the information in this data sheet is subject to revision. We therefore kindly ask you to always use the latest issue of this document (available under www.pulspower.com).

No part of this document may be reproduced or utilized in any form without our prior permission in writing.

TERMINOLOGY AND ABREVIATIONS

PE and ⏚ symbol	PE is the abbreviation for **P**rotective **E**arth and has the same meaning as the symbol ⏚.
t.b.d.	To be defined, value or description will follow later.
AC 230V	A figure displayed with the AC or DC before the value represents a nominal voltage with standard tolerances (usually ±15%) included. E.g.: DC 12V describes a 12V battery disregarding whether it is full (13.7V) or flat (10V)
230Vac	A figure with the unit (Vac) at the end is a momentary figure without any additional tolerances included.
50Hz vs. 60Hz	As long as not otherwise stated, AC 100V and AC 230V parameters are valid at 50Hz mains frequency. AC 120V parameters are valid for 60Hz mains frequency.
may	A key word indicating flexibility of choice with no implied preference.
shall	A key word indicating a mandatory requirement.
should	A key word indicating flexibility of choice with a strongly preferred implementation.

1. INTENDED USE

This device is designed for installation in an enclosure and is intended for commercial use, such as in industrial control, process control, monitoring and measurement equipment or the like.

Do not use this device in equipment, where malfunctioning may cause severe personal injury or threaten human life without additional appropriate safety devices, that are suited for the application.

If this device is used in a manner outside of its specification, the protection provided by the device may be impaired.

2. INSTALLATION INSTRUCTION

⚠ WARNING **Risk of electrical shock, fire, personal injury or death.**

- Turn power off before working on the device and protect against inadvertent re-powering.
- Do not open, modify or repair the device.
- Use caution to prevent any foreign objects from entering into the housing.
- Do not use in wet locations or in areas where moisture or condensation can be expected.
- Do not touch during power-on, and immediately after power-off. Hot surface may cause burns.

Obey the following installation instructions:

This device may only be installed and put into operation by qualified personnel.

This device does not contain serviceable parts. The tripping of an internal fuse is caused by an internal defect.

If damage or malfunction should occur during installation or operation, immediately turn power off and send unit to the factory for inspection.

Install device in an enclosure providing protection against electrical, mechanical and fire hazards.

Install the device onto a DIN rail according to EN 60715 with the input terminals on the bottom of the device. Other mounting orientations require a reduction in output current.

Make sure that the wiring is correct by following all local and national codes. Use appropriate copper cables that are designed for a minimum operating temperature of 60°C for ambient temperatures up to +45°C, +75°C for ambient temperatures up to +60°C and 90°C for ambient temperatures up to +70°C.

Ensure that all strands of a stranded wire enter the terminal connection. Use ferrules for wires on the input terminals. Unused screw terminals should be securely tightened.

The device is designed for pollution degree 2 areas in controlled environments. No condensation or frost is allowed.

The enclosure of the device provides a degree of protection of IP20. The enclosure does not provide protection against spilled liquids.

The isolation of the device is designed to withstand impulse voltages of overvoltage category III according to IEC 60664-1.

The device is designed as “Class of Protection I” equipment according to IEC 61140. Do not use without a proper PE (Protective Earth) connection.

The device is suitable to be supplied from TN, TT or IT mains networks. The continuous voltage between the input terminal and the PE potential must not exceed 300Vac.

The input can also be powered from batteries or similar DC sources. The continuous voltage between the supply voltage and the PE/ground potential must not exceed 375Vdc.

A disconnecting means shall be provided for the input of the device.

The device is designed for convection cooling and does not require an external fan.

Do not obstruct airflow and do not cover ventilation grid! The device is designed for altitudes up to 5000m. Above 2000m a reduction in output current and overvoltage category is required.

Keep the following minimum installation clearances: 40mm on top, 20mm on the bottom, 5mm left and right side. Increase the 5mm to 15mm in case the adjacent device is a heat source. When the device is permanently loaded with less than 50%, the 5mm can be reduced to zero.

The device is designed, tested and approved for branch circuits up to 32A (IEC) and 30A (UL) without additional protection device. If an external fuse is utilized, do not use circuit breakers smaller than 6A B- or C-Characteristic to avoid a nuisance tripping of the circuit breaker.

The maximum surrounding air temperature is +70°C. The operational temperature is the same as the ambient or surrounding air temperature and is defined 2cm below the device.

The device is designed to operate in areas between 5% and 95% relative humidity.

Installation Instructions for Hazardous Location Areas

The device is suitable for use in Class I Division 2 Groups A, B, C, D locations and for use in Group II Category 3 (Zone 2) environments.

Classification: ATEX: EPS 15 ATEX 1 101 X, II 3G Ex ec nC IIC T4 Gc / IECEx EPS 15.0079X.

WARNING EXPLOSION HAZARDS!

Use only in standard vertical mounting orientation with the input terminals on bottom of the unit.

Substitution of components may impair suitability for this environment.

Do not disconnect the device or operate the voltage adjustment unless power has been switched off or the area is known to be non-hazardous.

A suitable enclosure must be provided for the end product, which has a minimum protection of IP54 and fulfils the requirements of the EN 60079-0.

3. AC-INPUT

AC input	Nom.	AC 100-240V	Suitable for TN-, TT- and IT mains networks
AC input range		85-264Vac	Below 90Vac, reduce output current according to Fig. 3-5.
		264-300Vac	For maximal 500ms
Allowed voltage L or N to earth	Max.	300Vac	Continuous according to IEC 62477-1
Input frequency	Nom.	50–60Hz	±6%
Turn-on voltage	Typ.	80Vac	Steady-state value, see Fig. 3-1
Shut-down voltage	Typ.	70Vac	Steady-state value, see Fig. 3-1
	Typ.	55Vac	Dynamic value for maximal 250ms
External input protection	See recommendations in chapter 24.3.		

		AC 100V	AC 120V	AC 230V	
Input current	Typ.	2.82A	2.32A	1.20A	At 48V, 5.4A, see Fig. 3-3
Power factor*)	Typ.	0.99	0.99	0.98	At 48V, 5.4A, see Fig. 3-4
Crest factor**)	Typ.	1.5	1.5	1.65	At 48V, 5.4A
Start-up delay	Typ.	300ms	290ms	240ms	See Fig. 3-2
Rise time	Typ.	63ms	63ms	63ms	At 48V, 5.4A const. current load, 0mF load capacitance, see Fig. 3-2
	Typ.	210ms	210ms	210ms	At 48V, 5.4A const. current load, 5mF load capacitance, see Fig. 3-2
Turn-on overshoot	Max.	200mV	200mV	200mV	See Fig. 3-2
External input protection	See recommendations in chapter 24.3.				

*) The power factor is the ratio of the true (or real) power to the apparent power in an AC circuit.
**) The crest factor is the mathematical ratio of the peak value to RMS value of the input current waveform.

Fig. 3-1 **Input voltage range**

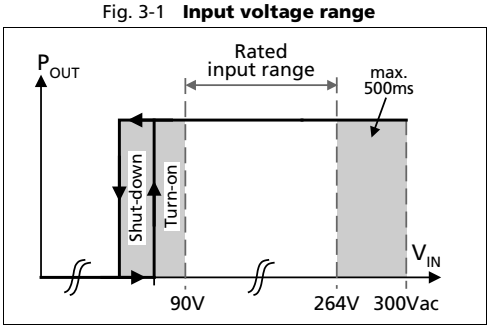

Fig. 3-2 **Turn-on behavior, definitions**

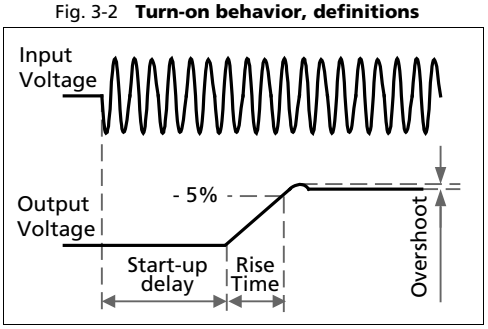

Fig. 3-3 **Input current vs. output current at 48V output voltage**

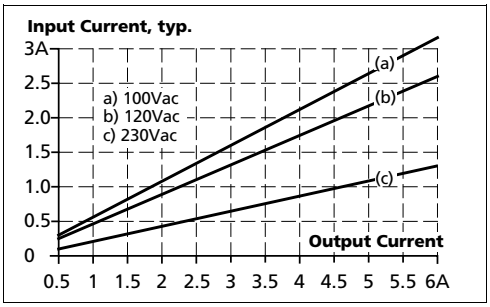

Fig. 3-4 **Power factor vs. output current at 48V output voltage**

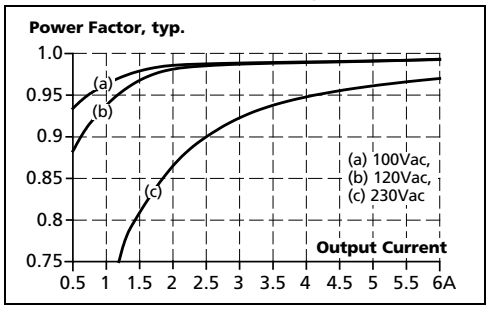

Fig. 3-5 **Derating requirements**

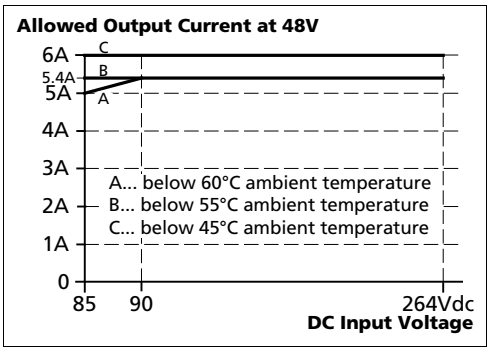

4. DC-INPUT

DC input	Nom.	DC 110-150V	±20%
DC input range		88-180Vdc	Below 93.5Vdc, reduce output current according to Fig. 4-2.
DC input current	Typ.	2.51A	At 110Vdc
Allowed Voltage L/N to Earth	Max.	375Vdc	Continuous, according to IEC 62477-1
Turn-on voltage	Typ.	80Vdc	Steady state value
Shut-down voltage	Typ.	70Vdc	Steady state value
	Typ.	55Vdc	Dynamic value for maximal 250ms

Instructions for DC use:

a) Use a battery or a similar DC source. A supply from the intermediate DC-bus of a frequency converter is not recommended and can cause a malfunction or damage the unit.
b) Connect +pole to L and –pole to N.
c) Connect the PE terminal to an earth wire or to the machine ground.

Fig. 4-1 **Wiring for DC Input**

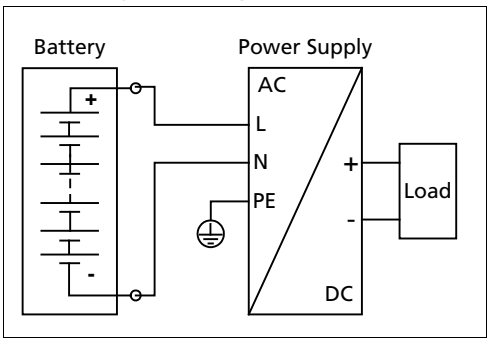

Fig. 4-2 **Derating requirements**

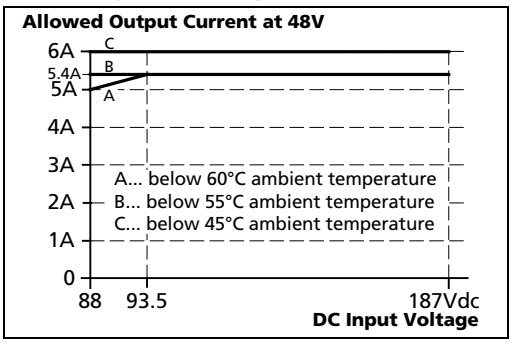

5. INPUT INRUSH CURRENT

An active inrush limitation circuit (NTCs, which are bypassed by a relay contact) limits the input inrush current after turn-on of the input voltage.

The charging current into EMI suppression capacitors is disregarded in the first microseconds after switch-on.

		AC 100V	AC 120V	AC 230V	
Inrush current	Max.	$11A_{peak}$	$7A_{peak}$	$11A_{peak}$	At +40°C, cold start
	Typ.	$9A_{peak}$	$6A_{peak}$	$6A_{peak}$	At +25°C, cold start
	Typ.	$9A_{peak}$	$6A_{peak}$	$9A_{peak}$	At +40°C, cold start
Inrush energy	Max.	$0.1A^2s$	$0.1A^2s$	$0.4A^2s$	At +40°C, cold start

Fig. 5-1 **Typical turn-on behavior at nominal load, 120Vac input and 25°C ambient**

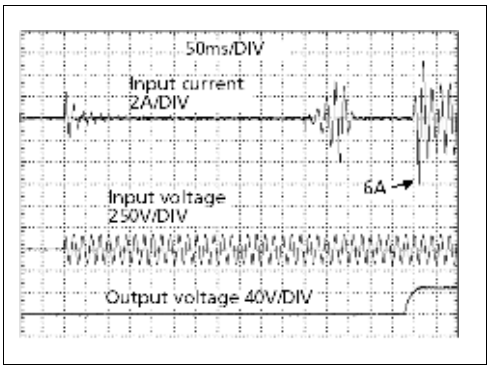

Fig. 5-2 **Typical turn-on behavior at nominal load, 230Vac input and 25°C ambient**

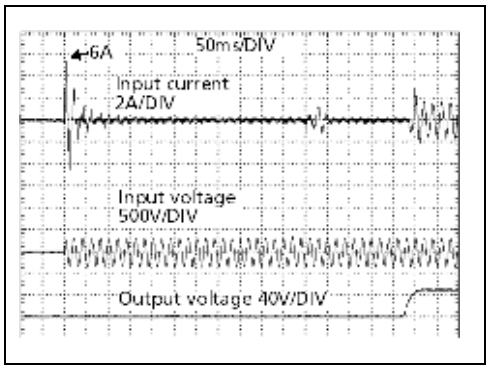

6. OUTPUT

Output voltage	Nom.	48V	
Adjustment range		48-56V	Guaranteed value
	Max.	58.0V	This is the maximum output voltage which can occur at the clockwise end position of the potentiometer due to tolerances. It is not a guaranteed value which can be achieved.
Factory settings	Typ.	48.0V	±0.2%, at full load and cold unit
Line regulation	Max.	10mV	Between 85 and 300Vac
Load regulation	Max.	50mV	Between 0 and 6A, static value, see Fig. 6-1
Ripple and noise voltage	Max.	50mVpp	Bandwidth 20Hz to 20MHz, 50Ohm
Output current	Nom.	5.4A	At 48V and up to60°C ambient temperature, see Fig. 6-1
	Nom.	4.0A	At 48V and +70°C ambient temperature, see Fig. 16-1
	Nom.	4.6A	At 56V and up to +60°C ambient temperature, see Fig. 6-1
	Nom.	3.4A	At 56V and +70°C ambient temperature, see Fig. 16-1
	Derate linearly between +60°C to +70°C, see chapter 16		
PowerBoost[1)]	Nom.	6.0A	At 48V and up to +45°C ambient temperature, see Fig. 16-
	Nom.	5.2A	At 56V and up to +45°C ambient temperature, see Fig. 16-
	PowerBoost decreases linearly to nominal power between +45°C and +60°C, see chapter 16		
Fuse breaking current	Typ.	15A	For minimal 12ms once every five seconds, see Fig. 6-2. The output voltage stays above 40V. See chapter 24.1 for more peak current measurements. For AC 100V mains, the pulse length is shorter than 12ms.
Overload behavior		Continuous current	Output voltage above 26Vdc, see Fig. 6-1
		Hiccup*PLUS* mode[2)]	Output voltage below 26Vdc, see Fig. 6-1
Short-circuit current	Min.	6.3A[3)]	Load impedance <90mOhm, see Fig. 6-3
	Max.	7.7A[3)]	Load impedance <90mOhm, see Fig. 6-3
	Max.	2.2A	Average (R.M.S.) current, load impedance 50mOhm, see Fig. 6-3
	Min.	14.5A	Up to 12ms, load impedance <90mOhm, see Fig. 6-2
	Typ.	16.0A	Up to 12ms, load impedance <90mOhm, see Fig. 6-2
Output capacitance	Typ.	960µF	Included inside the power supply

1) **PowerBoost**
This power/ current is continuously allowed up to an ambient temperature of +45°C.
Above +45°C, do not use this power/ current longer than a duty cycle of 10% and/ or not longer than 1 minute every 10 minutes.

2) **Hiccup*PLUS* Mode**
At heavy overloads (when output voltage falls below 26V), the power supply delivers continuous output current for 2s. After this, the output is switched off for approx. 18s before a new start attempt is automatically performed. This cycle is repeated as long as the overload exists. If the overload has been cleared, the device will operate normally. See Fig. 6-3

3) Discharge current of output capacitors is not included.

Fig. 6-1 **Output voltage vs. output current, typ.**

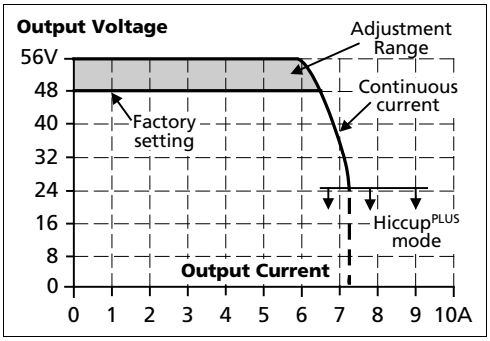

Fig. 6-2 **Dynamic output current capability, typ.**

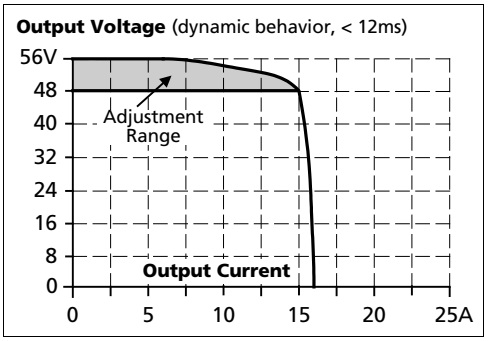

Fig. 6-3 **Short-circuit on output, Hiccup^{PLUS} mode, typ.**

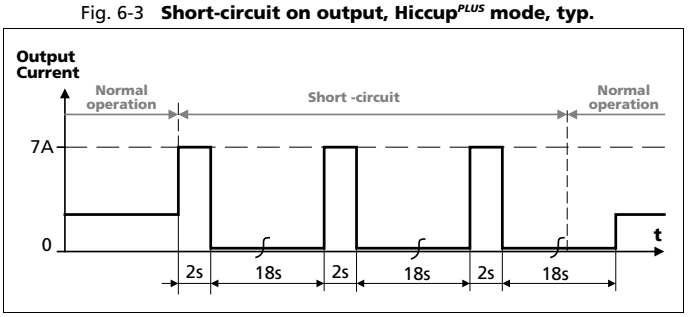

7. HOLD-UP TIME

		AC 100V	AC 120V	AC 230V	
Hold-up Time	Typ.	67ms	67ms	67ms	At 48V, 2.7A, see Fig. 7-1
	Min.	50ms	50ms	50ms	At 48V, 2.7A, see Fig. 7-1
	Typ.	34ms	34ms	34ms	At 48V, 5.4A, see Fig. 7-1
	Min.	26ms	26ms	26ms	At 48V, 5.4A, see Fig. 7-1

Fig. 7-1 **Hold-up time vs. input voltage**

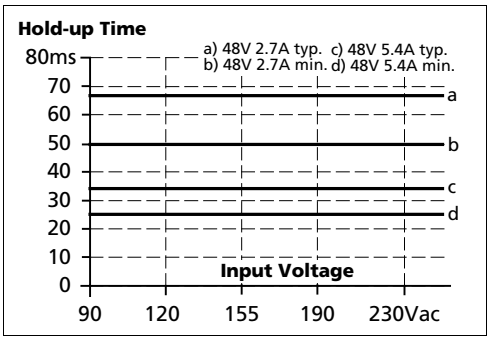

Fig. 7-2 **Shut-down behavior, definitions**

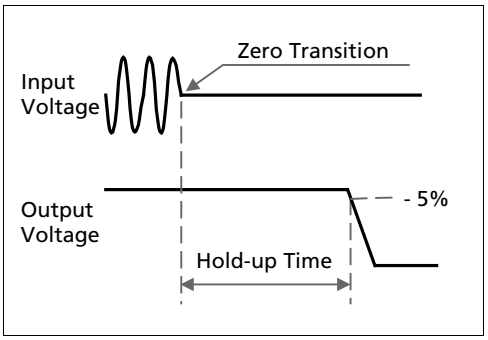

8. DC-OK RELAY CONTACT

This feature monitors the output voltage on the output terminals of a running power supply.

Contact closes	As soon as the output voltage reaches typ. 90% of the adjusted output voltage level.
Contact opens	As soon as the output voltage dips more than 10% below the adjusted output voltage. Short dips will be extended to a signal length of 100ms. Dips shorter than 1ms will be ignored.
Switching hysteresis	Typ. 2V
Contact ratings	Maximal 60Vdc 0.3A, 30Vdc 1A, 30Vac 0.5A, resistive load Minimal permissible load: 1mA at 5Vdc
Isolation voltage	See dielectric strength table in chapter 18.

Fig. 8-1 **DC-OK relay contact behavior**

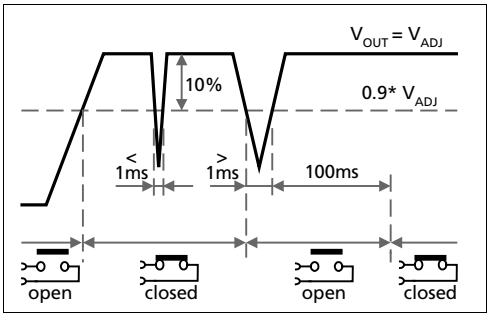

9. EFFICIENCY AND POWER LOSSES

		AC 100V	AC 120V	AC 230V	
Efficiency	Typ.	93.0%	93.8%	95.5%	At 48V, 5.4A
	Typ.	92.7%	93.6%	95.4%	At 48V, 6A (PowerBoost)
Average efficiency*)	Typ.	92.8%	93.4%	94.5%	25% at 1.3A, 25% at 2.6A, 25% at 3.9A. 25% at 5.4A
Power losses	Typ.	2.5W	2.3W	2.0W	At 48V, 0A
	Typ.	10.2W	9.5W	7.4W	At 48V, 2.7A
	Typ.	19.5W	17.2W	12.3W	At 48V, 5.4A
	Typ.	22.7W	19.7W	13.9W	At 48V, 6A (PowerBoost)

*) The average efficiency is an assumption for a typical application where the power supply is loaded with 25% of the nominal load for 25% of the time, 50% of the nominal load for another 25% of the time, 75% of the nominal load for another 25% of the time and with 100% of the nominal load for the rest of the time.

Fig. 9-1 **Efficiency vs. output current at 48V, typ.**

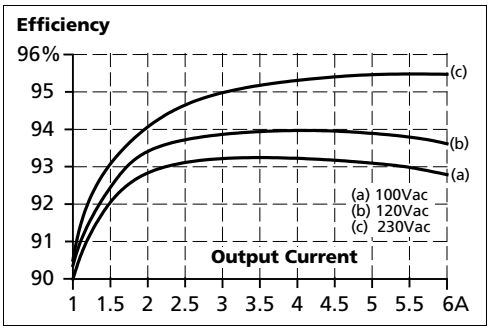

Fig. 9-2 **Losses vs. output current at 48V, typ.**

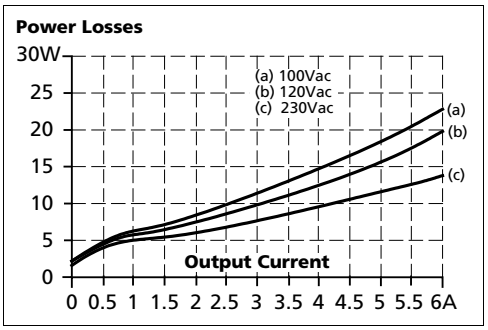

Fig. 9-3 **Efficiency vs. input voltage at 48V, 5.4A, typ.**

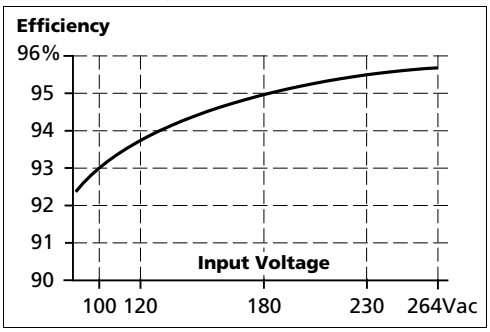

Fig. 9-4 **Losses vs. input voltage at 48V, 5.4A, typ.**

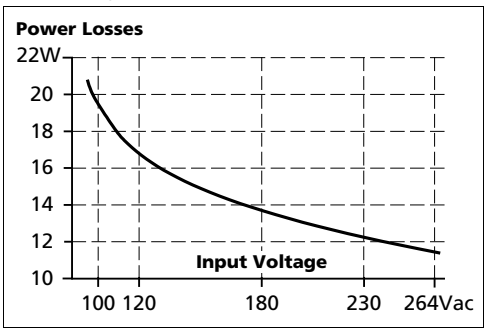

10. LIFETIME EXPECTANCY

The Lifetime expectancy shown in the table indicates the minimum operating hours (service life) and is determined by the lifetime expectancy of the built-in electrolytic capacitors. Lifetime expectancy is specified in operational hours and is calculated according to the capacitor's manufacturer specification. The manufacturer of the electrolytic capacitors only guarantees a maximum life of up to 15 years (131 400h). Any number exceeding this value is a calculated theoretical lifetime which can be used to compare devices.

	AC 100V	**AC 120V**	**AC 230V**	
Lifetime expectancy	141 000h	158 000h	188 000h	At 48V, 2.7A and +40°C
	399 000h	446 000h	531 000h	At 48V, 2.7A and +25°C
	63 000h	77 000h	120 000h	At 48V, 5.4A and +40°C
	178 000h	219 000h	338 000h	At 48V, 5.4A and +25°C
	45 000h	57 000h	97 000h	At 48V, 6A and +40°C
	126 000h	161 000h	275 000h	At 48V, 6A and +25°C

11. MTBF

MTBF stands for **M**ean **T**ime **B**etween **F**ailures, which is calculated according to statistical device failures, and indicates reliability of a device. It is the statistical representation of the likelihood of a unit to fail and does not necessarily represent the life of a product.

The MTBF figure is a statistical representation of the likelihood of a device to fail. A MTBF figure of e.g. 1 000 000h means that statistically one unit will fail every 100 hours if 10 000 units are installed in the field. However, it cannot be determined if the failed unit has been running for 50 000h or only for 100h.

	AC 100V	**AC 120V**	**AC 230V**	
MTBF SN 29500, IEC 61709	506 000h	523 000h	699 000h	At 48V, 5.4A and +40°C
	897 000h	923 000h	1 201 000h	At 48V, 5.4A and +25°C
MTBF MIL HDBK 217F	223 000h	224 000h	248 000h	At 48V, 5.4A and +40°C; Ground Benign GB40
	303 000h	303 000h	339 000h	At 48V, 5.4A and +25°C; Ground Benign GB25
	50 000h	51 000h	58 000h	At 48V, 5.4A and +40°C; Ground Fixed GF40
	65 000h	65 000h	74 000h	At 48V, 5.4A and +25°C; Ground Fixed GF25

12. FUNCTIONAL DIAGRAM

Fig. 12-1 **Functional diagram**

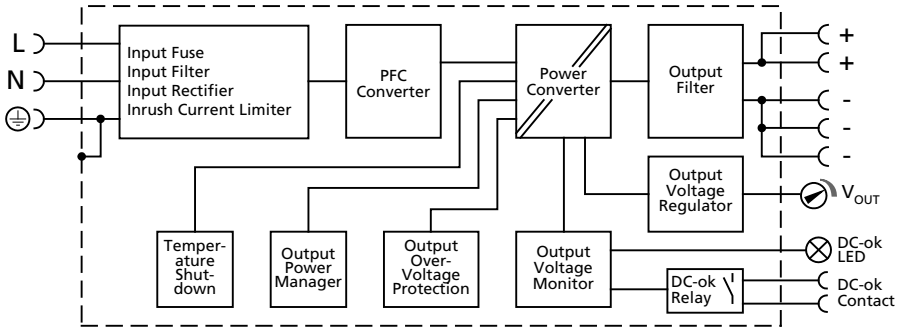

13. TERMINALS AND WIRING

The terminals are IP20 finger safe constructed and suitable for field- and factory wiring.

	Input and output	**DC-OK Signal**
Type	Screw terminals	Push-in terminals
Solid wire	Max. 6mm²	Max. 1.5mm²
Stranded wire	Max. 4mm²	Max. 1.5mm²
American Wire Gauge	AWG 20-10	AWG 24-16
Wire diameter	Max. 2.8mm (including ferrules)	Max. 1.6mm (including ferrules)
Wire stripping length	7mm	8mm
Screwdriver	3.5mm slotted or cross-head No 2	Not required
Recommended tightening torque	1Nm	Not applicable

Instructions:

a) Use appropriate copper cables that are designed for minimum operating temperatures of:
60°C for ambient temperature up to 45°C and
75°C for ambient temperature up to 60°C and
90°C for ambient temperature up to 70°C.
b) Follow national installation codes and installation regulations!
c) Ensure that all strands of a stranded wire enter the terminal connection!
d) Unused terminal compartments should be securely tightened.
e) Ferrules are allowed.

Daisy chaining:

Daisy chaining (jumping from one power supply output to the next) is allowed as long as the average output current through one terminal pin does not exceed 25A. If the current is higher, use a separate distribution terminal block as shown in Fig. 13-2.

Fig. 13-1 Daisy chaining of outputs

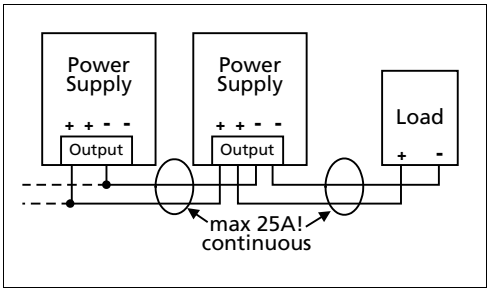

Fig. 13-2 Using distribution terminals

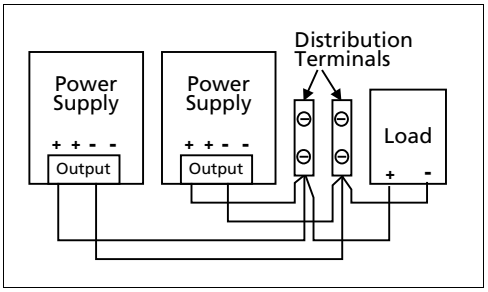

14. FRONT SIDE AND USER ELEMENTS

Fig. 14-1
Front side

A **Input Terminals** (screw terminals)
N, L Line input
⏚ PE (Protective Earth) input

B **Output Terminals** (screw terminals)
(two identical + poles and three identical - poles)
+ Positive output
– Negative (return) output

C **Output voltage potentiometer**
Open the flap to adjust the output voltage. Factory set: 48.0V

D **DC-OK LED** (green)
On, when the output voltage is >90% of the adjusted output voltage

E **DC-OK Relay Contact**
(spring-clamp terminals)
Monitors the output voltage of the running power supply. See chapter 8 for details.

15. EMC

The power supply is suitable for applications in industrial environment as well as in residential, commercial and light industry environments.

EMC Immunity	According to generic standards: EN 61000-6-1 and EN 61000-6-2			
Electrostatic discharge	EN 61000-4-2	Contact discharge Air discharge	8kV 15kV	Criterion A Criterion A
Electromagnetic RF field	EN 61000-4-3	80MHz-2.7GHz	20V/m	Criterion A
Fast transients (Burst)	EN 61000-4-4	Input lines Output lines DC-OK signal (coupling clamp)	4kV 2kV 2kV	Criterion A Criterion A Criterion A
Surge voltage on input	EN 61000-4-5	L → N L → PE, N → PE	2kV 4kV	Criterion A Criterion A
Surge voltage on output	EN 61000-4-5	+ → - + / - → PE	1kV 2kV	Criterion A Criterion A
Surge voltage on Signals	EN 61000-4-5	DC-OK signal → PE	1kV	Criterion A
Conducted disturbance	EN 61000-4-6	0.15-80MHz	20V	Criterion A
Mains voltage dips	EN 61000-4-11	0% of 100Vac 40% of 100Vac 70% of 100Vac 0% of 200Vac 40% of 200Vac 70% of 200Vac	0Vac, 20ms 40Vac, 200ms 70Vac, 500ms 0Vac, 20ms 80Vac, 200ms 140Vac, 500ms	Criterion A Criterion C Criterion C Criterion A Criterion A Criterion A
Voltage interruptions	EN 61000-4-11	0% of 200Vac (=0V)	5000ms	Criterion C
Voltage sags	SEMI F47	Dips on the input voltage according to SEMI F47 standard		
		80% of 120Vac (96Vac) 70% of 120Vac (84Vac) 50% of 120Vac (60Vac)	1000ms 500ms 200ms	Criterion A Criterion A Criterion A
Powerful transients	VDE 0160	Over entire load range	750V, 0.3ms	Criterion A

Criterions:

A: Power supply shows normal operation behavior within the defined limits.

C: Temporary loss of function is possible. Power supply may shut-down and restarts by itself. No damage or hazards for the power supply will occur.

EMC Emission	According to generic standards: EN 61000-6-3 and EN 61000-6-4	
Conducted emission input lines	EN 55011, EN 55015, EN 55032, FCC Part 15, CISPR 11, CISPR 32	Class B
Conducted emission output lines[2)]	IEC/CISPR 16-1-2, IEC/CISPR 16-2-1	Limits for DC power port according EN 61000-6-3 fulfilled
Radiated emission	EN 55011, EN 55032	Class B
Harmonic input current	EN 61000-3-2	Class A fulfilled between 0A and 6A load Class C fulfilled between 2.5A and 6A load
Voltage fluctuations, flicker	EN 61000-3-3	Fulfilled[1)]

This device complies with FCC Part 15 rules.
Operation is subjected to following two conditions: (1) this device may not cause harmful interference, and (2) this device must accept any interference received, including interference that may cause undesired operation.

1) Tested with constant current loads, non pulsing
2) For information only, not mandatory for EN 61000-6-3

Switching Frequencies

PFC converter	110kHz	Fixed frequency
Main converter	84kHz to 140kHz	Output load dependent
Auxiliary converter	60kHz	Fixed frequency

16. ENVIRONMENT

Operational temperature [1]	-25°C to +70°C	Reduce output power according to Fig. 16-1
Storage temperature	-40°C to +85°C	For storage and transportation
Output derating	6.5W/K	Between +60°C and +70°C
Humidity	5 to 95% r.h.	According to IEC 60068-2-30 Do not energize while condensation is present
Vibration sinusoidal [2]	2-17.8Hz: ±1.6mm; 17.8-500Hz: 2g 2 hours / axis	According to IEC 60068-2-6
Shock [2]	30g 6ms, 20g 11ms 3 bumps / direction, 18 bumps in total	According to IEC 60068-2-27
Altitude	0 to 2000m	Without any restrictions
	2000 to 6000m	Reduce output power or ambient temperature, see Fig. 16-2.
Altitude derating	15W/1000m or 5K/1000m	Above 2000m , see Fig. 16-2
Overvoltage category	III	According to IEC 62477-1 for altitudes up to 2000m
	II	According to IEC 62477-1 for altitudes from 2000m to 6000m
Degree of pollution	2	According to IEC 62477-1, not conductive
Audible noise	Some audible noise may be emitted from the power supply during no load, overload or short circuit.	

1) Operational temperature is the same as the ambient or surrounding temperature and is defined as the air temperature 2cm below the unit.
2) Tested in combination with DIN rails according to EN 60715 with a height of 15mm and a thickness of 1.3mm and standard orientation.

Fig. 16-1 **Output current vs. ambient temp. (Inom = 5.4A; Iout with PowerBoost = 6A)**

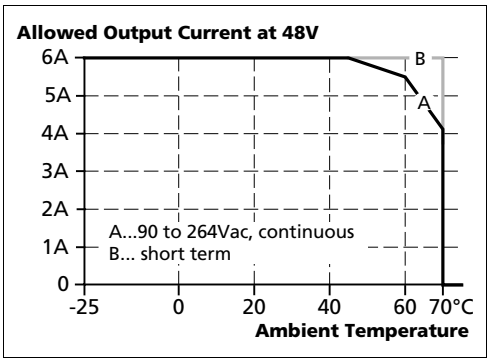

Fig. 16-2 **Output current vs. altitude**

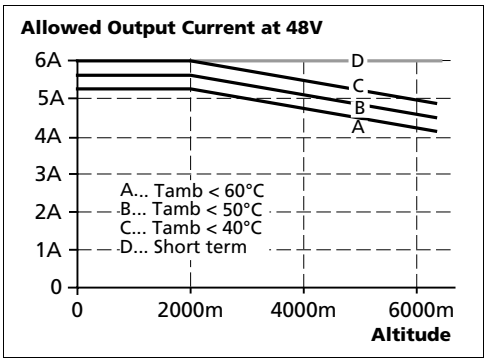

17. PROTECTION FEATURES

Output protection	Electronically protected against overload, no-load and short-circuits. In case of a protection event, audible noise may occur.	
Output overvoltage protection	Typ. 58.5Vdc Max. 60Vdc	In case of an internal power supply defect, a redundant circuit limits the maximum output voltage. The output shuts down and automatically attempts to restart.
Degree of protection	IP20	EN/IEC 60529
Penetration protection	> 4mm	E.g. screws, small parts
Overtemperature protection	Yes	Output shut-down with automatic restart. The temperature sensor is installed on critical components inside the unit and turns the unit off in safety critical situations (e.g. derating requirements not observed, high ambient temperature, ventilation obstructed or the mounting orientation derating is not followed). There is no correlation between the operating temperature and turn-off temperature since this is dependent on input voltage, load and installation methods.
Input transient protection	MOV (Metal Oxide Varistor)	For protection values see chapter 15 (EMC).
Internal input fuse	Included	Not user replaceable slow-blow high-braking capacity fuse

18. SAFETY FEATURES

Input / output separation	Double or reinforced galvanic isolation	
	SELV	IEC/EN 60950-1
	PELV	IEC/EN 60204-1, EN 62477-1, IEC 60364-4-41
Class of protection	I	PE (Protective Earth) connection required
Isolation resistance	> 500MOhm	At delivered condition between input and output, measured with 500Vdc
	> 500MOhm	At delivered condition between input and PE, measured with 500Vdc
	> 500MOhm	At delivered condition between output and PE, measured with 500Vdc
	> 500MOhm	At delivered condition between output and DC-OK contacts, measured with 500Vdc
PE resistance	< 0.1Ohm	Resistance between PE terminal and the housing in the area of the DIN rail mounting bracket.
Touch current (leakage current)	Typ. 0.14mA / 0.36mA	At 100Vac, 50Hz, TN-,TT-mains / IT-mains
	Typ. 0.20mA / 0.50mA	At 120Vac, 60Hz, TN-,TT-mains / IT-mains
	Typ. 0.33mA / 0.86mA	At 230Vac, 50Hz, TN-,TT-mains / IT-mains
	Max. 0.18mA / 0.43mA	At 110Vac, 50Hz, TN-,TT-mains / IT-mains
	Max. 0.26mA / 0.61mA	At 132Vac, 60Hz, TN-,TT-mains / IT-mains
	Max. 0.44mA / 1.05mA	At 264Vac, 50Hz, TN-,TT-mains / IT-mains

19. DIELECTRIC STRENGTH

The output voltage is floating and has no ohmic connection to the ground. Type and factory tests are conducted by the manufacturer. Field tests may be conducted in the field using the appropriate test equipment which applies the voltage with a slow ramp (2s up and 2s down). Connect all input-terminals together as well as all output poles before conducting the test. When testing, set the cut-off current settings to the value in the table below.

Fig. 19-1 **Dielectric strength**

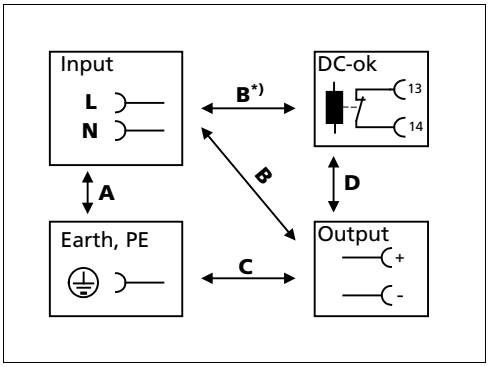

		A	B	C	D
Type test	60s	2500Vac	4000Vac	1000Vac	500Vac
Factory test	5s	2500Vac	2500Vac	500Vac	500Vac
Field test	5s	2000Vac	2000Vac	500Vac	500Vac
Cut-off current setting		> 10mA	> 10mA	> 20mA	> 1mA

To fulfil the PELV requirements according to EN60204-1 § 6.4.1, we recommend that either the + pole, the – pole or any other part of the output circuit shall be connected to the protective earth system. This helps to avoid situations in which a load starts unexpectedly or can not be switched off when unnoticed earth faults occur.

B*) When testing input to DC-OK ensure that the max. voltage between DC-OK and the output is not exceeded (column D). We recommend connecting DC-OK pins and the output pins together when performing the test.

20. APPROVED, FULFILLED OR TESTED STANDARDS

UL 508		UL Certificate Listed equipment for category NMTR - Industrial Control Equipment Applicable for US and Canada E-File: E198865
IEC 61010-2-201		CB Scheme Certificate Electrical Equipment for Measurement, Control and Laboratory Use - Particular requirements for control equipment
IEC 60950-1		CB Scheme Certificate General safety requirements for Information Technology Equipment (ITE)
UL 60950-1		UL Certificate Recognized component for category QQGQ - Information Technology Equipment (ITE) Applicable for US and Canada E-File: E137006
ATEX		Agency Certificate (Bureau Veritas) EN 60079-0 Explosive atmospheres - General requirements EN 60079-7, EN 60079-15 Equipment protection by type of protection "e" and "n" Certificate: EPS 15 ATEX 1 101 X Temperature Code: T4 Type of Protection: ec nC
IECEx		IECEx Certificate IEC 60079-0 Explosive atmospheres - General requirements IEC 60079-7, IEC 60079-15 Equipment protection by type of protection "e" and "n" Certificate: IECEx EPS 15.0079X Temperature Code: T4 Type of Protection: ec nC
Class I Div 2		UL Certificate Listed equipment for category NRAD - Listed equipment Industrial Control Equipment for Use in Hazardous Locations Applicable for US and Canada E-File: E327416 Temperature Code: T4 Groups: A, B, C and D
Marine (DNV)		DNV Certificate DNV Type approved product Certificate: TAA00002YX
Marine (ABS)		ABS Design Assessment Certificate ABS (American Bureau of Shipment) assessed product Certificate: 22-2231447-PDA

IEC 60068-2-60	Corrosion IEC 60068-2-60 Method 4	Manufacturer's Declaration (Online Document) Environmental Tests, Flowing Mixed Gas Corrosion Test IEC 60068-2-60 Method 4 Test Ke - Method 4 H2S: 10ppb NO2: 200ppb Cl2: 10ppb SO2: 200ppb Test Duration: 3 weeks, this simulates a service life of 10 years.
ISA-71.04 G3	Corrosion G3-ISA-71.04	Manufacturer's Declaration (Online Document) Airborne Contaminants Corrosion Test ISA-71.04 G3 Severity Level: G3 Harsh H2S: 100ppb NOx: 1250ppb Cl2: 20ppb SO2: 300ppb Test Duration: 3 weeks, this simulates a service life of 10 years.
Labs	LABS VDMA 24364-C1-L/W	Paint Wetting Impairment Substances Test (or LABS-Test) Tested for Zone 2 and test class C1 according to VDMA 24364-C1-L/W for solvents and water-based paints

21. REGULATORY PRODUCT COMPLIANCE

EU Declaration of Conformity	CE	The CE mark indicates conformance with the - EMC directive - ATEX directive - RoHS directive
REACH Regulation (EU)	REACH ✓	Manufacturer's Declaration EU regulation regarding the Registration, Evaluation, Authorisation and Restriction of Chemicals (REACH) fulfilled. EU Regulation (EC) 1907/2006.
WEEE Regulation		Manufacturer's Declaration EU Regulation on Waste Electrical and Electronic Equipment Registered as business to business (B2B) products. EU Regulation 2012/19/EU
KC	KC	KC Korean Certification Korean - Registration of Broadcasting and Communication Equipment Registered under Clause3, Article 58-2 of Radio Waves Act. Registration No. R-R-PUG-CP10_481.
CCC	CCC	CCC Certificate China Compulsory Certification (CNCA-C23-01:2019) Certificate for devices made in Suzhou/China (PULS Electronics): 2021122303114443 Certificate for devices made in Chomutov/Czech Republic (PULS investiční): 2021122303114444 CCC-Ex

22. PHYSICAL DIMENSIONS AND WEIGHT

Width	39mm
Height	124mm
Depth	117mm The DIN rail depth must be added to the unit depth to calculate the total required installation depth.
Weight	600g
DIN rail	Use 35mm DIN rails according to EN 60715 or EN 50022 with a height of 7.5 or 15mm.
Housing material	Body: Aluminium alloy Cover: Zinc-plated steel
Installation clearances	See chapter 2

Fig. 22-1
Front view

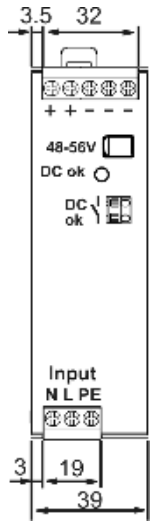

All dimensions in mm

Fig. 22-2
Side view

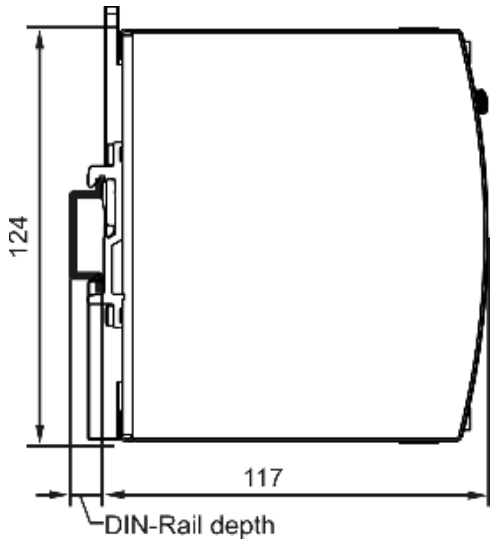

All dimensions in mm

23. ACCESSORIES

23.1. ZM10.WALL - WALL/PANEL MOUNT BRACKET

This bracket is used to mount the devices on a wall/panel without utilizing the DIN rail. The bracket can be mounted without detaching the DIN rail brackets from the power supply. PSU for illustration purpose only.

Fig. 23-1 **Isometric view**

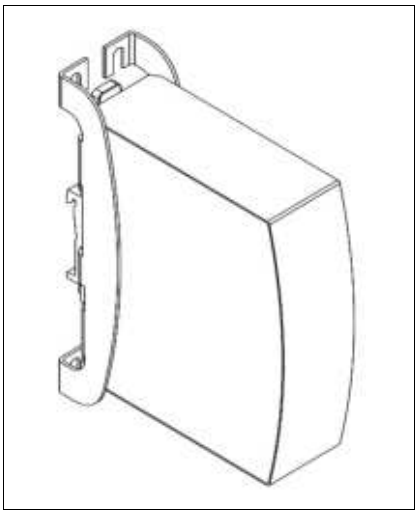

Fig. 23-2 **Isometric view**

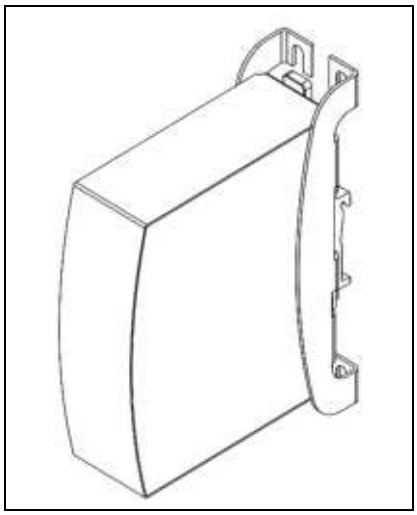

Fig. 23-3 **Isometric view**

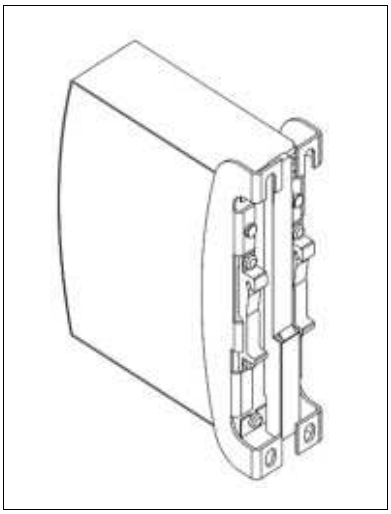

Fig. 23-4 **Wall/panel mounting, side view**

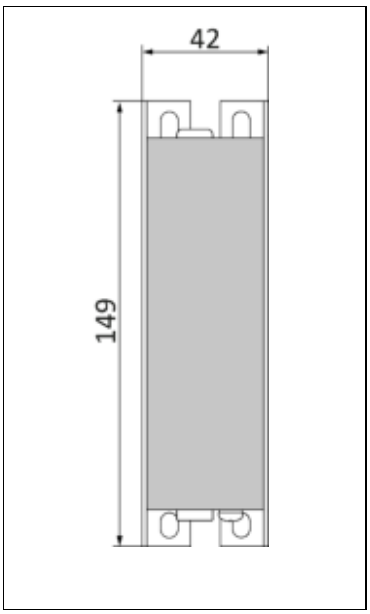

Fig. 23-5 **Hole pattern for wall mounting**

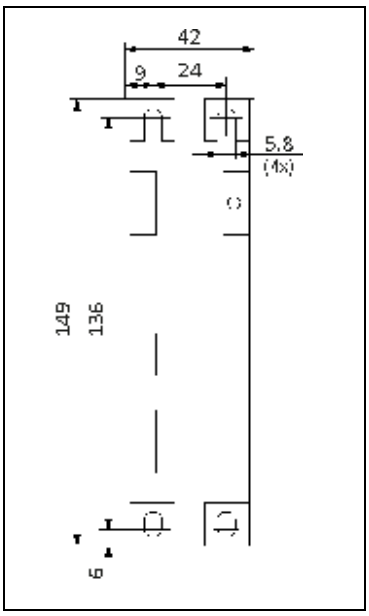

Fig. 23-6 **Wall/panel mounting, side view**

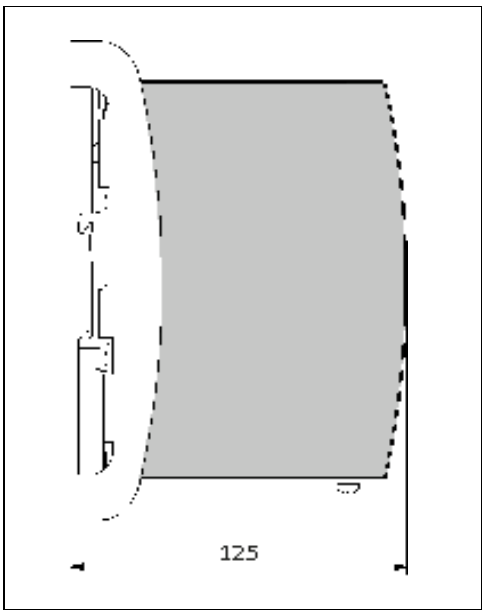

23.2. ZM12.SIDE - SIDE MOUNTING BRACKET

This bracket is used to mount DIMENSION units sideways with or without utilizing a DIN rail. The two aluminum brackets and the black plastic slider of the unit have to be detached, so that the steel brackets can be mounted.

For sideway DIN rail mounting, the removed aluminum brackets and the black plastic slider need to be mounted on the steel bracket.

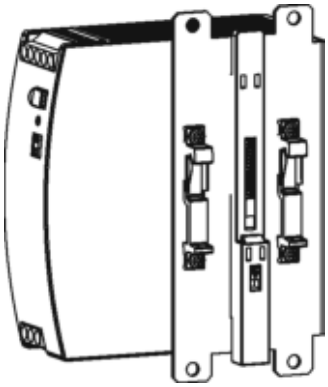

Side mounting with DIN rail brackets

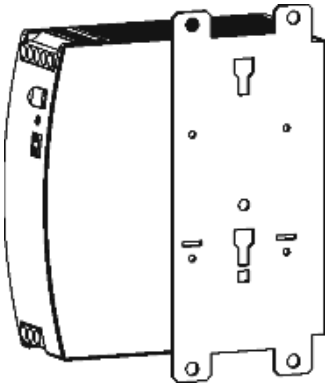

Side mounting without DIN rail brackets

23.3. YR2.DIODE - REDUNDANCY MODULE

(2x 10A Inputs, 1x 20A output)

The YR2.DIODE is a dual redundancy module, which has two diodes as decoupling devices included. It can be used for various purposes. The most popular application is to configure highly reliable and true redundant power supply systems. Another interesting application is the separation of sensitive loads from non-sensitive loads. This avoids the distortion of the power quality for the sensitive loads which can cause controller failures.

The YR2.DIODE does not require an additional auxiliary voltage and is self-powered even in case of a short circuit across the output.

The unit is very slender and only requires 32mm width on the DIN rail.

23.4. YR40.482 - REDUNDANCY MODULE

(2x 20A Inputs, 1x 40A output)

The YR40.482 is equipped with two input channels, which are individually decoupled by utilizing MOSFET technology. Using MOSFETs instead of diodes reduces the heat generation and the voltage drop between input and output. The YR40.482 does not require an additional auxiliary voltage and is self-powered even in case of a short circuit across the output.

Due to the low power losses, the unit is very slender and only requires 46mm width on the DIN rail.

Fig. 23-7 **Typical 1+1 Redundant configuration for 5A with the YR2.DIODE redundancy module**

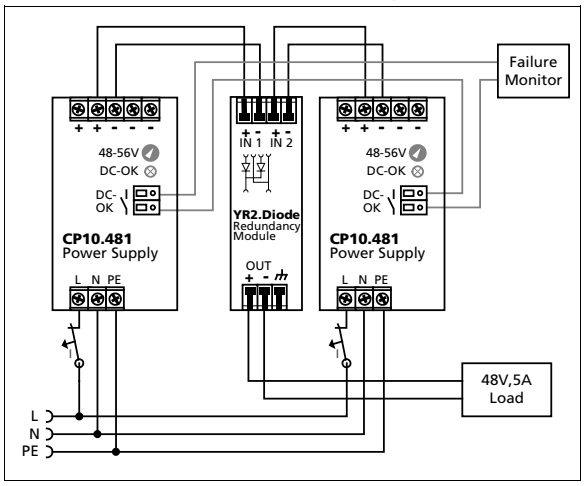

Fig. 23-8 **Typical 1+1 Redundant configuration for 5A with the YR40.482 MOSFET redundancy module**

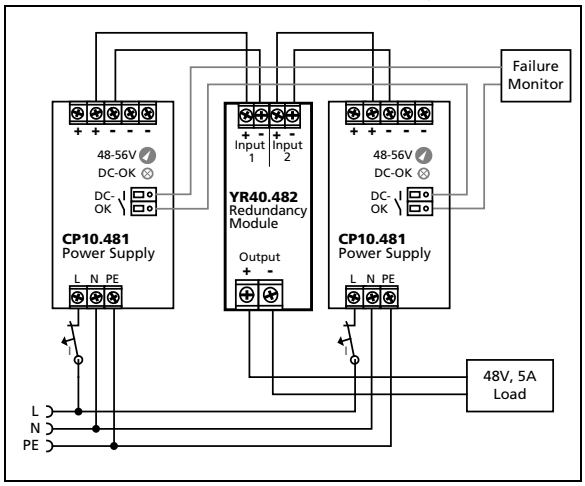

24. APPLICATION NOTES

24.1. PEAK CURRENT CAPABILITY

The unit can deliver peak currents (up to several milliseconds) which are higher than the specified short term currents.

This helps to start current demanding loads. Solenoids, contactors and pneumatic modules often have a steady state coil and a pick-up coil. The inrush current demand of the pick-up coil is several times higher than the steady-state current and usually exceeds the nominal output current (including the PowerBoost). The same situation applies when starting a capacitive load.

The peak current capability also ensures the safe operation of subsequent circuit breakers of load circuits. The load branches are often individually protected with circuit breakers or fuses. In case of a short or an overload in one branch circuit, the fuse or circuit breaker need a certain amount of overcurrent to open in a timely manner. This avoids voltage loss in adjacent circuits.

The extra current (peak current) is supplied by the power converter and the built-in large sized output capacitors of the power supply. The capacitors get discharged during such an event, which causes a voltage dip on the output. The following two examples show typical voltage dips for resistive loads:

Fig. 24-1 **10.8A peak current for 50ms , typ. (2x the nominal current)**

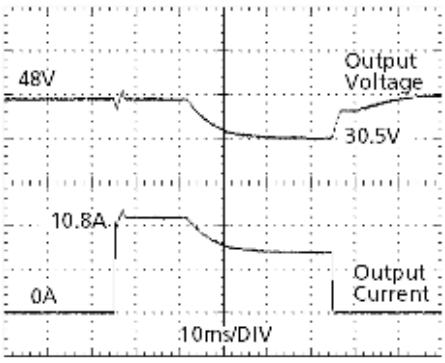

Fig. 24-2 **27A peak current for 5ms , typ. (5x the nominal current)**

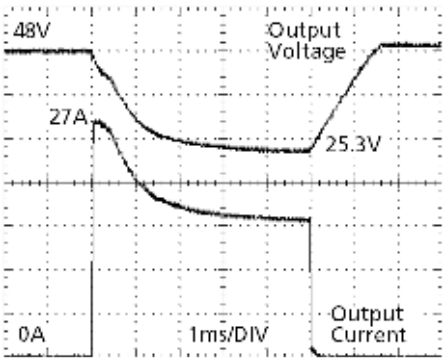

Fig. 24-3 **16A peak current for 12ms , typ. (3x the nominal current)**

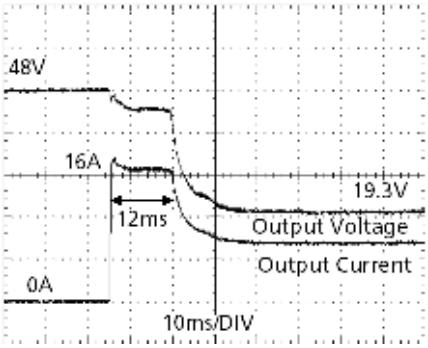

Please note: The DC-OK relay triggers when the voltage dips more than 10% for longer than 1ms.

Peak current voltage dips	Typically from 48V to 30.5V	At 10.8A for 50ms, resistive load
	Typically from 48V to 30.0V	At 27A for 2ms, resistive load
	Typically from 48V to 25.3V	At 27A for 5ms, resistive load

24.2. BACK-FEEDING LOADS

Loads such as decelerating motors and inductors can feed voltage back to the power supply. This feature is also called return voltage immunity or resistance against Back- E.M.F. (Electro Magnetic Force).

This power supply is resistant and does not show malfunctioning when a load feeds back voltage to the power supply. It does not matter whether the power supply is on or off.

The maximum allowed feed-back-voltage is 63Vdc. The maximum allowed feed-back peak current is 21A. Higher currents can temporarily shut-down the output voltage. The absorbing energy can be calculated according to the built-in large sized output capacitor which is specified in chapter 6.

24.3. EXTERNAL INPUT PROTECTION

The unit is tested and approved for branch circuits up to 30A (UL) and 32A (IEC). An external protection is only required if the supplying branch has an ampacity greater than this. Check also local codes and local requirements. In some countries local regulations might apply.

If an external fuse is necessary or utilized, minimum requirements need to be considered to avoid nuisance tripping of the circuit breaker. A minimum value of 6A B- or C-Characteristic breaker should be used.

24.4. OUTPUT CIRCUIT BREAKERS

Standard miniature circuit breakers (MCB's or UL 1077 circuit breakers) are commonly used for AC-supply systems and may also be used on 48V branches.

MCB's are designed to protect wires and circuits. If the ampere value and the characteristics of the MCB are adapted to the wire size that is used, the wiring is considered as thermally safe regardless of whether the MCB opens or not.

To avoid voltage dips and under-voltage situations in adjacent 48V branches which are supplied by the same source, a fast (magnetic) tripping of the MCB is desired. A quick shutdown within 10ms is necessary corresponding roughly to the ride-through time of PLC's. This requires power supplies with high current reserves and large output capacitors. Furthermore, the impedance of the faulty branch must be sufficiently small in order for the current to actually flow. The best current reserve in the power supply does not help if Ohm's law does not permit current flow. The following table has typical test results showing which B- and C-Characteristic MCBs magnetically trip depending on the wire cross chapter and wire length.

Fig. 24-4 **Test circuit**

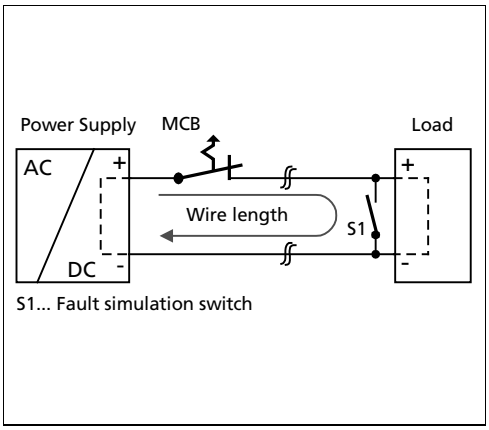

Maximal wire length*) for a fast (magnetic) tripping:

	0.75mm²	1.0mm²	1.5mm²	2.5mm²
C-2A	42m	49m	59m	109m
C-3A	13m	24m	28m	42m

*) Don't forget to consider twice the distance to the load (or cable length) when calculating the total wire length (+ and – wire).

24.5. PARALLEL USE TO INCREASE OUTPUT POWER

CP10.481 power supplies can be paralleled to increase the output power. The output voltage of all power supplies shall be adjusted to the same value (±100mV) with the same load conditions on all units, or the units can be left with the factory settings. There is no feature included which balances the load current between the power supplies. Usually the power supply with the higher adjusted output voltage draws current until it goes into current limitation. This means no harm to this power supply as long as the ambient temperature stays below 40°C.

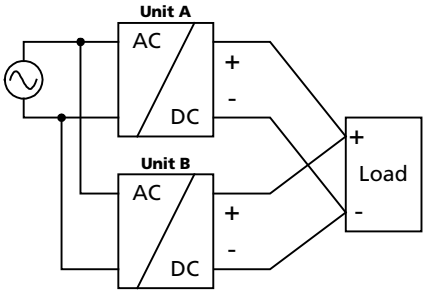

If more than three units are connected in parallel, a fuse or circuit breaker with a rating of 10A or 12A is required on each output. Alternatively, a diode or redundancy module can also be utilized.

Energize all units at the same time to avoid the overload Hiccup*PLUS* mode. It also might be necessary to cycle the input power (turn-off for at least five seconds), if the output was in Hiccup*PLUS* mode due to overload or short circuits and the required output current is higher than the current of one unit.

Restrictions:
Keep an installation clearance of 15mm (left / right) between two power supplies and avoid installing the power supplies on top of each other.
Do not use power supplies in parallel in mounting orientations other than the standard mounting orientation (terminals on bottom of the unit) or in any other condition where a derating of the output current is required (e.g. altitude, …).

Pay attention that leakage current, EMI, inrush current, harmonics will increase when using multiple power supplies.

24.6. PARALLEL USE FOR REDUNDANCY

Power supplies can be paralleled for redundancy to gain higher system availability. Redundant systems require a certain amount of extra power to support the load in case one power supply unit fails. The simplest way is to put two decoupled power supplies in parallel. This is called a 1+1 redundancy. In case one power supply unit fails, the other one is automatically able to support the load current without any interruption. Redundant systems for a higher power demand are usually built in a N+1 method. E.g. five power supplies, each rated for 5A are paralleled to build a 20A redundant system. For N+1 redundancy the same restrictions apply as for increasing the output power, see also chapter 24.5.

Please note: Always use a redundancy module to decouple power supplies from each other. This prevents that the defective unit becomes a load for the other power supplies and the output voltage cannot be maintained any more. Further information and wiring configurations can be found in chapter 23.3.

Recommendations for building redundant power systems:

a) Use separate input fuses for each power supply.
b) Monitor the individual power supply units. Therefore, use the DC-OK relay contact of the CP10 power supply.
c) It is desirable to set the output voltages of all units to the same value (± 100mV) or leave it at the factory setting.

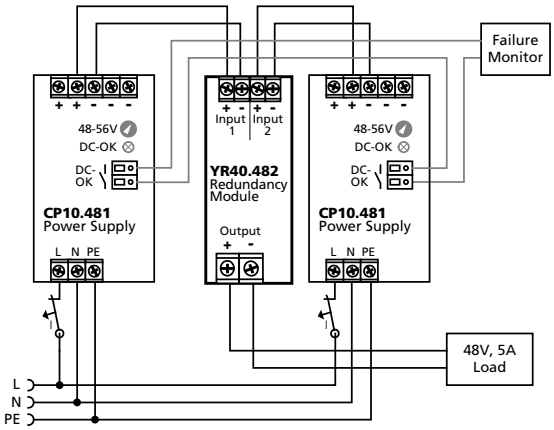

24.7. SERIES OPERATION

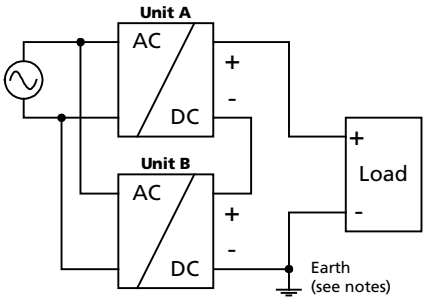

Power supplies of the same type can be connected in series for higher output voltages. It is possible to connect as many units in series as needed, providing the sum of the output voltage does not exceed 150Vdc. Voltages with a potential above 60Vdc are not SELV any more and can be dangerous. Such voltages must be installed with a protection against touching.

Earthing of the output is required when the sum of the output voltage is above 60Vdc.

Avoid return voltage (e.g. from a decelerating motor or battery) which is applied to the output terminals.

Restrictions:
Keep an installation clearance of 15mm (left / right) between two power supplies and avoid installing the power supplies on top of each other.
Do not use power supplies in series in mounting orientations other than the standard mounting orientation (terminals on bottom of the unit).

Pay attention that leakage current, EMI, inrush current, harmonics will increase when using multiple power supplies.

24.8. INDUCTIVE AND CAPACITIVE LOADS

The unit is designed to supply any kind of loads, including capacitive and inductive loads. If extreme large capacitors, such as EDLCs (electric double layer capacitors or "UltraCaps") with a capacitance larger than 0.5F are connected to the output, the unit might charge the capacitor in the Hiccup^{PLUS} mode (see chapter 6).

24.9. CHARGING OF BATTERIES

The power supply can be used to charge lead-acid or maintenance free batteries (SLA or VRLA batteries). Four 12V batteries are needed in series.

Instructions for charging batteries:

a) Set output voltage (measured at no load and at the battery end of the cable) very precisely to the end-of-charge voltage.

End-of-charge voltage	55.6V	55.0V	54.3V	53.6V
Battery temperature	10°C	20°C	30°C	40°C

b) Use a 10A or 12A circuit breaker (or blocking diode) between the power supply and the battery.

c) Ensure that the output current of the power supply is below the allowed charging current of the battery.

d) Use only matched batteries when putting 12V types in series.

e) Ensure that the ambient temperature of the power supply stays below 40°C.

f) The return current to the power supply (battery discharge current is typ. 1.8mA when the power supply is switched off (except in case a blocking diode is utilized).

24.10. OPERATION ON TWO PHASES

The power supply can also be used on two-phases of a three-phase-system. Such a phase-to-phase connection is allowed as long as the supplying voltage is below 240V$^{+10\%}$.

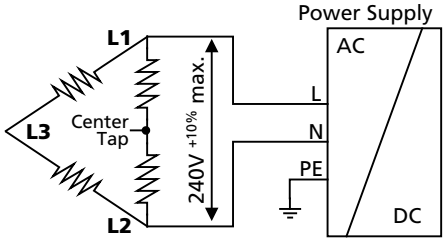

24.11. USE IN A TIGHTLY SEALED ENCLOSURE

When the power supply is installed in a tightly sealed enclosure, the temperature inside the enclosure will be higher than outside. In such situations, the inside temperature defines the ambient temperature for the power supply.

The following measurement results can be used as a reference to estimate the temperature rise inside the enclosure.

The power supply is placed in the middle of the box, no other heat producing items are inside the box

The temperature sensor inside the box is placed in the middle of the right side of the power supply with a distance of 1cm.

	Case A	**Case B**	**Case C**	**Case D**
Enclosure size	**110**x180x165mm Rittal Typ IP66 Box PK 9516 100, plastic	**110**x180x165mm Rittal Typ IP66 Box PK 9516 100, plastic	**180**x180x165mm Rittal Typ IP66 Box PK 9519 100, plastic	**180**x180x165mm Rittal Typ IP66 Box PK 9519 100, plastic
Input voltage	230Vac	230Vac	230Vac	230Vac
Load	48V, 4.3A; (=**80%**)	48V, 5.4A; (=**100%**)	48V, 4.3A; (=**80%**)	48V, 5.4A; (=**100%**)
Temperature inside the box	43.7°C	48.6°C	40.9°C	45.0°C
Temperature outside the box	24.1°C	25.4°C	23.9°C	25.0°C
Temperature rise	19.6K	23.2K	17.0K	20.0K

24.12. MOUNTING ORIENTATIONS

Mounting orientations other than all terminals on the bottom require a reduction in continuous output power or a limitation in the maximum allowed ambient temperature. The amount of reduction influences the lifetime expectancy of the power supply. Therefore, two different derating curves for continuous operation can be found below:

Curve A1 Recommended output current.
Curve A2 Max allowed output current (results in approximately half the lifetime expectancy of A1).

Fig. 24-5
Mounting Orientation A
(Standard orientation)

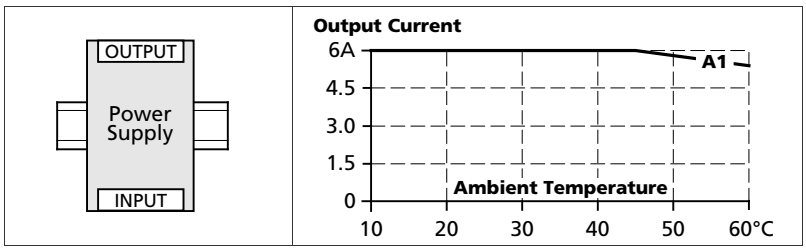

Fig. 24-6
Mounting Orientation B
(Upside down)

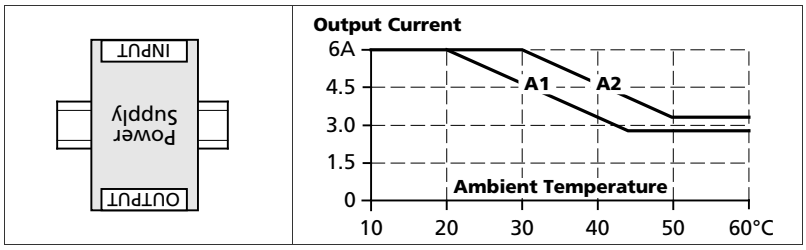

Fig. 24-7
Mounting Orientation C
(Table-top mounting)

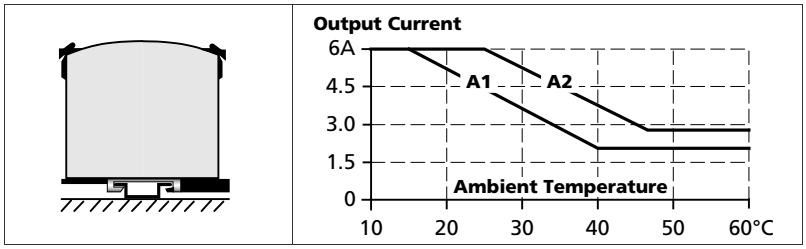

Fig. 24-8
Mounting Orientation D
(Horizontal cw)

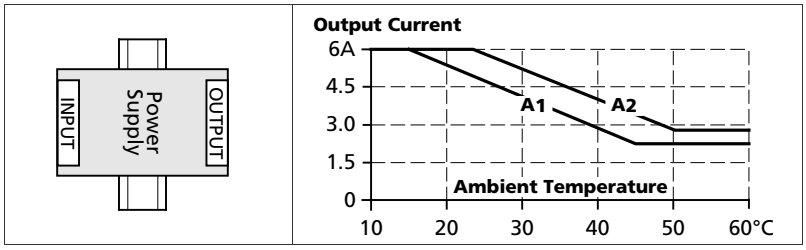
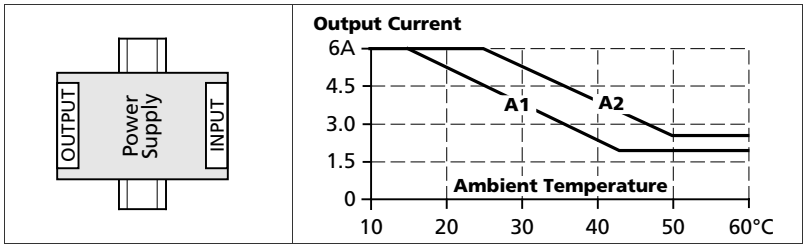
Fig. 24-9
Mounting Orientation E
(Horizontal ccw)