THIS DOCUMENT IS THE PROPERTY OF KEYSTONE ELECTRONICS CORP. AND SHALL NOT BE REPRODUCED, DISTRIBUTED OR USED AS A BASIS FOR MANUFACTURE WITHOUT PRIOR WRITTEN PERMISSION FROM KEYSTONE ELECTRONICS CORP.

ACTUAL SIZE



PCB TRACE

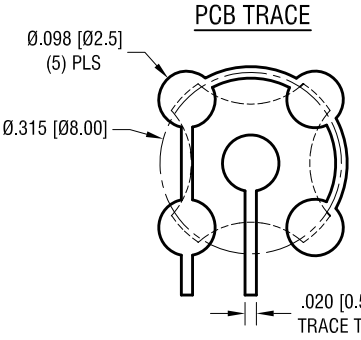

KEYPAD DOMES ARE DESIGNED TO BE PLACED ON PCB, NOT SOLDERED

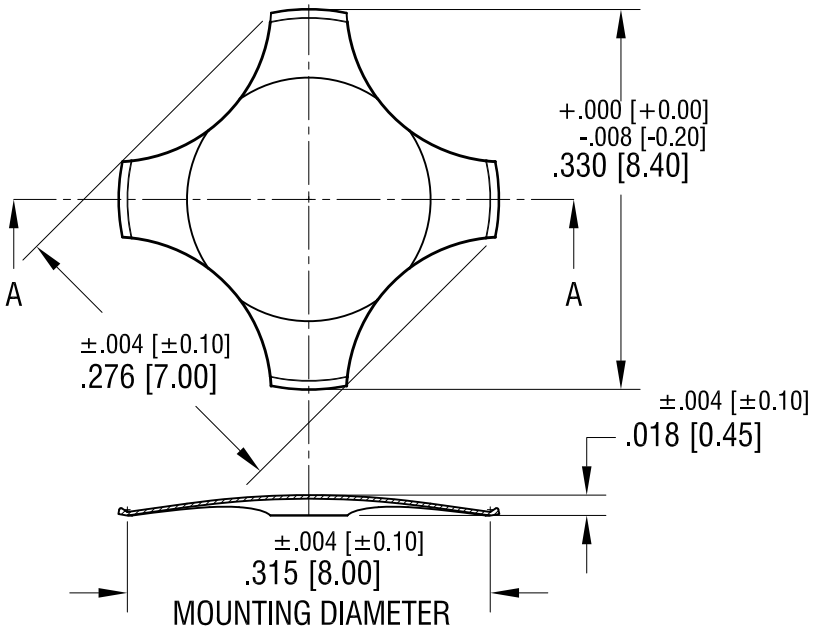

SECTION A-A

NOTE:

1. VOLTAGE/CURRENT MAXIMUM: 12mA@ 24 Volts DC
2. OPERATING TEMPERATURE: -40°F [-40°C] TO 220°F [105°C]
3. STORAGE TEMPERATURE: -65°F [-55°C] TO 250°F [125°C]
4. TRIP FORCE: 220g

DATE	DESCRIPTION	REV.
	SUPPLIED IN BULK WAS SUPPLIED IN TUBE	
5.11.22	CHANGE AS PER ECN 22-068	A

KEYSTONE ELECTRONICS CORP.

www.keyelco.com • NEW HYDE PARK NY 11040 • Tel (516)328-7500

PART NAME: MINI 4 LEG DOME			
MATERIAL: .003 [0.08] TH'K STAINLESS STEEL			
FINISH: NICKEL PLATE		DRN BY: NT	DATE: 2.15.17
		APP'D: RH	SCALE: 5X
TOLERANCES INCH [MM] DECIMAL ± .005 [± 0.13] ANGULAR ± 1° UNLESS OTHERWISE SPECIFIED	CODE: C	DWG NO.: 5133	