LM4050-N/-Q1 Precision Micropower Shunt Voltage Reference

1 Features

- Small Package: SOT-23
- No Output Capacitor Required
- Tolerates Capacitive Loads
- Fixed Reverse Breakdown Voltages of 2.048V, 2.5V, 4.096V, 5V, 8.192V, and 10V
- Key Specifications (LM4050-N)
  - Output Voltage Tolerance (A Grade, 25°C) ±0.1% (Maximum)
  - Low Output Noise (10Hz to 10kHz) 41µVrms (Typical)
  - Wide Operating Current Range 60µA to 15mA
  - Industrial Temperature Range −40°C to 85°C
  - Extended Temperature Range −40°C to 125°C
  - Low Temperature Coefficient 50ppm/°C (max)
  - LM4050-N-Q1 is AEC-Q100 Grade 1 Qualified and are Manufactured on an Automotive Grade Flow

2 Applications

- Battery-Powered Equipment
- Data-Acquisition Systems
- Instrumentation and Test Equipment
- Process Control
- Energy Management/Metering
- Automotive Electronics
- Precision Audio

3 Description

Designed for space-critical applications, the LM4050-N precision voltage reference is available in the sub-miniature (3mm × 1.3mm) SOT-23 surface-mount package. The LM4050-N design eliminates the need for an external stabilizing capacitor while maintaining stability with any capacitive load, thus making the LM4050-N easy to use. Further reducing design effort is the availability of several fixed reverse breakdown voltages: 2.048V, 2.5V, 4.096V, 5V, 8.192V, and 10V. The minimum operating current increases from 60µA for the LM4050-N-2.0 to 100µA for the LM4050-N-10.0. All versions have a maximum operating current of 15mA.

The LM4050-N utilizes fuse and Zener-zap reverse breakdown voltage trim during wafer sort to make sure that the prime parts have an accuracy of better than ±0.1% (A grade) at 25°C. Bandgap reference temperature drift curvature correction and low dynamic impedance verify stable reverse breakdown voltage accuracy over a wide range of operating temperatures and currents.

All grades and voltage options of the LM4050-N are available in both an industrial temperature range (−40°C and 85°C) and an extended temperature range (−40°C and 125°C).

Device Information

PART NUMBER	PACKAGE (1)	BODY SIZE (NOM) (2)
LM4050-N	SOT-23 (3)	2.92mm × 1.30mm
LM4050-N-Q1		

(1) For all available packages, see the orderable addendum at the end of the data sheet.
(2) The package size (length × width) is a nominal value and includes pins, where applicable.

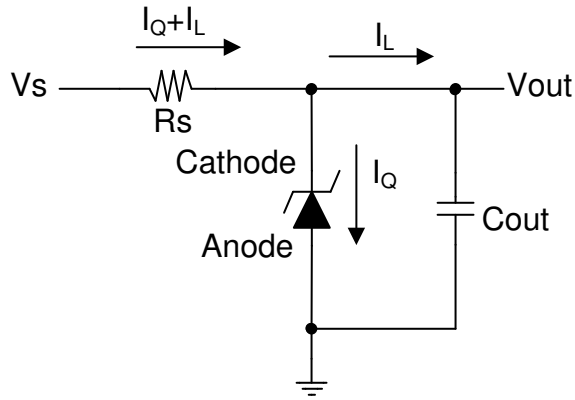

Shunt Regulator Schematic

An IMPORTANT NOTICE at the end of this data sheet addresses availability, warranty, changes, use in safety-critical applications, intellectual property matters and other important disclaimers. PRODUCTION DATA.

Table of Contents

1 Features....1
2 Applications....1
3 Description....1
4 Pin Configuration and Functions....3
5 Specifications....4
5.1 Absolute Maximum Ratings....4
5.2 ESD Ratings....4
5.3 Recommended Operating Conditions....5
5.4 Thermal Information....5
5.5 Electrical Characteristics: 2V Option....6
5.6 Electrical Characteristics: 2.5V Option....7
5.7 Electrical Characteristics: 4.1V Option....8
5.8 Electrical Characteristics: 5V Option....9
5.9 Electrical Characteristics: 8.2V Option....10
5.10 Electrical Characteristics: 10V Option....11
5.11 Typical Characteristics....12
6 Parameter Measurement Information....13
7 Detailed Description....14
7.1 Overview....14
7.2 Functional Block Diagram....14
7.3 Feature Description....14
7.4 Device Functional Modes....14
8 Application and Implementation....15
8.1 Application Information....15
8.2 Typical Applications....16
8.3 Power Supply Recommendations....22
8.4 Layout....22
9 Device and Documentation Support....23
9.1 Support Resources....23
9.2 Trademarks....23
9.3 Electrostatic Discharge Caution....23
9.4 Glossary....23
10 Revision History....23
11 Mechanical, Packaging, and Orderable Information....24

Copyright © 2025 Texas Instruments Incorporated

4 Pin Configuration and Functions

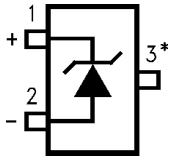

*This pin must be left floating or connected to pin 2.[1]

Figure 4-1. DBZ Package
3-Pin SOT-23
Top View

Table 4-1. Pin Functions

PIN		I/O	DESCRIPTION
NAME	NO.		
Cathode	1	I/O	Shunt current and input voltage
Anode	2	O	Common pin, normally connected to ground
NC	3	—	No internal connection [1]

(1) **In applications with high electromagnetic interference (for example, when placed near transformers or other electromagnetic sources) or significant high-frequency switching noise, TI recommends to connect this pin to the anode.**

Copyright © 2025 Texas Instruments Incorporated

5 Specifications

5.1 Absolute Maximum Ratings

See [(1)],[(2)]

	MIN	MAX	UNIT
Reverse Current		20	mA
Forward Current		10	mA
Power Dissipation (T_A = 25°C)[(1)]		280	mW
Maximum Junction Temperature [(2)]		150	°C
Storage Temperature	–65	150	°C

(1) Stresses beyond those listed under *Absolute Maximum Ratings* may cause permanent damage to the device. These are stress ratings only, which do not imply functional operation of the device at these or any other conditions beyond those indicated under *Recommended Operating Conditions*. Exposure to absolute-maximum-rated conditions for extended periods may affect device reliability.
(2) If Military/Aerospace specified devices are required, please contact the Texas Instruments Sales Office/ Distributors for availability and specifications.

5.2 ESD Ratings

			VALUE	UNIT
$V_{(ESD)}$	Electrostatic discharge	Human body model (HBM), per ANSI/ESDA/JEDEC JS-001[(1)]	±2000	V
		Charged device model (CDM), per JEDEC specification JESD22-C101[(2)]	±500	

(1) JEDEC document JEP155 states that 500V HBM allows safe manufacturing with a standard ESD control process.
(2) JEDEC document JEP157 states that 250V CDM allows safe manufacturing with a standard ESD control process.

Copyright © 2025 Texas Instruments Incorporated

5.3 Recommended Operating Conditions

over operating free-air temperature range (unless otherwise noted) [(1)] [(1)]

		MIN	MAX	UNIT
Industrial Temperature Range	Ambient Temperature Range	–40	85	°C
	Junction Temperature Range	–40	85	°C
Extended Temperature Range	Ambient Temperature Range	–40	125	°C
	Junction Temperature	–40	125	°C

(1) *Recommended Operating Conditions* are conditions under the device is intended to be functional. For specifications and conditions, see *Electrical Characteristics* section.

5.4 Thermal Information

THERMAL METRIC[(1)]		LM4050-N/-Q1 DBZ (SOT-23) 3 PINS	UNIT
$R_{\theta JA}$	Junction-to-ambient thermal resistance	287	°C/W
$R_{\theta JC(top)}$	Junction-to-case (top) thermal resistance	106.6	°C/W
$R_{\theta JB}$	Junction-to-board thermal resistance	57.7	°C/W
ψ_{JT}	Junction-to-top characterization parameter	5.5	°C/W
ψ_{JB}	Junction-to-board characterization parameter	56.4	°C/W
$R_{\theta JC(bot)}$	Junction-to-case (bottom) thermal resistance	N/A	°C/W

(1) For more information about traditional and new thermal metrics, see the *Semiconductor and IC Package Thermal Metrics* application report, SPRA953.

Copyright © 2025 Texas Instruments Incorporated

5.5 Electrical Characteristics: 2V Option

All other limits $T_A = T_J = 25°C$. The grades A, B and C designate initial Reverse Breakdown Voltage tolerances of ±0.1%, ±0.2%, and 0.5% respectively.

PARAMETER		TEST CONDITIONS		MIN[4]	TYP[3]	MAX[4]	UNIT
V_R	Reverse Breakdown Voltage	I_R = 100µA			2.048		V
	Reverse breakdown voltage tolerance[5]	I_R = 100µA	LM4050AIM3, LM4050AEM3			±2.048	mV
			LM4050BIM3, LM4050BEM3			±4.096	
			LM4050CIM3, LM4050CEM3			±10.24	
		Industrial temperature range $T_A = T_J = T_{MIN}$ to T_{MAX}	LM4050AIM3			±9.0112	
			LM4050BIM3			±11.4688	
			LM4050CIM3			±14.7456	
		Extended temperature range $T_A = T_J = T_{MIN}$ to T_{MAX}	LM4050AEM3			±12.288	
			LM4050BEM3			±14.7456	
			LM4050CEM3			±17.2032	
I_{RMIN}	Minimum operating current	$T_A = T_J = 25°C$			41	60	µA
		$T_A = T_J = T_{MIN}$ to T_{MAX}				65	
$\Delta V_R/\Delta T$	Average reverse breakdown voltage temperature coefficient[5]	I_R = 10mA			±20		ppm/°C
		I_R = 1mA			±15		
		I_R = 100µA, $T_A = T_J = 25°C$			±15		
		I_R = 100µA, $T_A = T_J = T_{MIN}$ to T_{MAX}				±50	
$\Delta V_R/\Delta I_R$	Reverse breakdown voltage change with operating current change[6]	$I_{RMIN} \le I_R \le$ 1mA, $T_A = T_J = 25°C$			0.3	0.8	mV
		$I_{RMIN} \le I_R \le$ 1mA, $T_A = T_J = T_{MIN}$ to T_{MAX}				1.2	
		1mA $\le I_R \le$ 15mA, $T_A = T_J = 25°C$			2.3	6	
		1mA $\le I_R \le$ 15mA, $T_A = T_J = T_{MIN}$ to T_{MAX}				8	
Z_R	Reverse dynamic impedance	I_R = 1mA, f = 120Hz, I_{AC} = 0.1 I_R			0.3		Ω
e_N	Wideband noise	I_R = 100µA, 10Hz ≤ f ≤ 10kHz			34		μV_{rms}
ΔV_R	Reverse breakdown voltage long term stability	t = 1000 hrs, T = 25°C ±0.1°C, I_R = 100µA			120		ppm
V_{HYST}	Thermal hysteresis [7]	ΔT = −40°C to 125°C			0.7		mV

Copyright © 2025 Texas Instruments Incorporated

5.6 Electrical Characteristics: 2.5V Option

All other limits $T_A = T_J = 25°C$. The grades A, B and C designate initial Reverse Breakdown Voltage tolerances of ±0.1%, ±0.2%, and 0.5% respectively.

PARAMETER		TEST CONDITIONS		MIN[4]	TYP[3]	MAX[4]	UNIT
V_R	Reverse breakdown voltage	I_R = 100µA			2.500		V
		I_R = 100µA	LM4050AIM3, LM4050AEM3			±2.5	mV
			LM4050BIM3, LM4050BEM3			±5	
			LM4050CIM3, LM4050CEM3			±13	
	Reverse breakdown voltage tolerance[5]	Industrial temperature range, $T_A = T_J = T_{MIN}$ to T_{MAX}	LM4050AIM3			±11	mV
			LM4050BIM3			±24	
			LM4050CIM3			±21	
		Extended temperature range, $T_A = T_J = T_{MIN}$ to T_{MAX}	LM4050AEM3			±15	
			LM4050BEM3			±18	
			LM4050CEM3			±25	
I_{RMIN}	Minimum operating current	$T_A = T_J = 25°C$			41	60	µA
		$T_A = T_J = T_{MIN}$ to T_{MAX}				65	
$\Delta V_R/\Delta T$	Average reverse breakdown voltage temperature coefficient[5]	I_R = 10mA			±20		ppm/°C
		I_R = 1mA			±15		
		I_R = 100µA, $T_A = T_J = 25°C$			±15		
		I_R = 100µA, $T_A = T_J = T_{MIN}$ to T_{MAX}				±50	
$\Delta V_R/\Delta I_R$	Reverse breakdown voltage change with operating current change[6]	$I_{RMIN} \le I_R \le$ 1mA, $T_A = T_J = 25°C$			0.3	0.8	mV
		$I_{RMIN} \le I_R \le$ 1mA $T_A = T_J = T_{MIN}$ to T_{MAX}				1.2	
$\Delta V_R/\Delta I_R$	Reverse breakdown voltage change with operating current change[6]	1mA $\le I_R \le$ 15mA, $T_A = T_J = 25°C$			2.3	6	mV
		1mA $\le I_R \le$ 15mA, $T_A = T_J = T_{MIN}$ to T_{MAX}				8	
Z_R	Reverse dynamic impedance	I_R = 1mA, f = 120Hz, I_{AC} = 0.1 I_R			0.3		Ω
e_N	Wideband noise	I_R = 100µA, 10Hz ≤ f ≤ 10kHz			41		μV_{rms}
ΔV_R	Reverse breakdown voltage long term stability	t = 1000 hrs, T = 25°C ±0.1°C, I_R = 100µA			120		ppm
V_{HYST}	Thermal hysteresis [7]	ΔT = −40°C to 125°C			07		mV

5.7 Electrical Characteristics: 4.1V Option

All other limits $T_A = T_J = 25°C$. The grades A, B and C designate initial Reverse Breakdown Voltage tolerances of ±0.1%, ±0.2%, and 0.5% respectively.

PARAMETER		TEST CONDITIONS		MIN	TYP[3]	MAX	UNIT
V_R	Reverse Breakdown Voltage	I_R = 100µA			4.096		V
	Reverse Breakdown Voltage Tolerance[5]	I_R = 100µA	LM4050AIM3, LM4050AEM3			±4.1	mV
			LM4050BIM3,LM4050BEM3			±8.2	
			LM4050CIM3, LM4050CEM3			±21	
		Industrial temperature range, $T_A = T_J = T_{MIN}$ to T_{MAX}	LM4050AIM3			±18	
			LM4050BIM3			±22	
			LM4050CIM3			±34	
		Extended temperature range, $T_A = T_J = T_{MIN}$ to T_{MAX}	LM4050AEM3			±25	
			LM4050BEM3			±29	
			LM4050CEM3			±41	
I_{RMIN}	Minimum Operating Current	$T_A = T_J$ = 25°C			52	68	µA
		Industrial temperature range, $T_A = T_J = T_{MIN}$ to T_{MAX}				73	
		Extended temperature range, $T_A = T_J = T_{MIN}$ to T_{MAX}				78	
$\Delta V_R/\Delta T$	Average reverse breakdown voltage temperature coefficient[5]	I_R = 10mA			±30		ppm/°C
		I_R = 1mA			±20		
		I_R = 100µA, $T_A = T_J$ = 25°C			±20		
		I_R = 100µA, $T_A = T_J = T_{MIN}$ to T_{MAX}				±50	
$\Delta V_R/\Delta I_R$	Reverse breakdown voltage change with operating current change[6]	$I_{RMIN} \le I_R \le$ 1mA, $T_A = T_J$ = 25°C			0.2	0.9	mV
		$I_{RMIN} \le I_R \le$ 1mA, $T_A = T_J = T_{MIN}$ to T_{MAX}				1.2	
		1mA $\le I_R \le$ 15mA, $T_A = T_J$ = 25°C			2	7	
		1mA $\le I_R \le$ 15mA, $T_A = T_J = T_{MIN}$ to T_{MAX}				10	
Z_R	Reverse dynamic impedance	I_R = 1mA, f = 120Hz, $I_{AC} = 0.1\ I_R$			0.5		Ω
e_N	Wideband noise	I_R = 100µA, 10Hz ≤ f ≤ 10kHz			93		μV_{rms}
ΔV_R	Reverse breakdown voltage long term stability	t = 1000 hrs, T = 25°C ±0.1°C, I_R = 100µA			120		ppm
V_{HYST}	Thermal hysteresis[7]	ΔT = −40°C to 125°C			1.148		mV

Copyright © 2025 Texas Instruments Incorporated

5.8 Electrical Characteristics: 5V Option

All other limits $T_A = T_J = 25°C$. The grades A, B and C designate initial Reverse Breakdown Voltage tolerances of ±0.1%, ±0.2% and 0.5% respectively.

PARAMETER		TEST CONDITIONS		MIN[4]	TYP[3]	MAX[4]	UNIT
V_R	Reverse Breakdown Voltage	I_R = 100µA			5		V
	Reverse Breakdown Voltage Tolerance[5]	I_R = 100µA	LM4050AIM3, LM4050AEM3			±5	mV
			LM4050BIM3. LM4050BEM3			±10	
			LM4050CIM3, LM4050CEM3			±25	
		Industrial Temp. Range $T_A = T_J = T_{MIN}$ to T_{MAX}	LM4050AIM3			±22	
			LM4050BIM3			±27	
			LM4050CIM3			±42	
		Extended Temp. Range $T_A = T_J = T_{MIN}$ to T_{MAX}	LM4050AEM3			±30	
			LM4050BEM3			±35	
			LM4050CEM3			±50	
I_{RMIN}	Minimum Operating Current	$T_A = T_J$ = 25°C			56	74	µA
		Industrial Temp. Range $T_A = T_J = T_{MIN}$ to T_{MAX}				80	
		Extended Temp. Range $T_A = T_J = T_{MIN}$ to T_{MAX}				90	
$\Delta V_R/\Delta T$	Average Reverse Breakdown Voltage Temperature Coefficient[5]	I_R = 10mA			±30		ppm/°C
		I_R = 1mA			±20		
		I_R = 100µA, $T_A = T_J$ = 25°C			±20		
		I_R = 100µA $T_A = T_J = T_{MIN}$ to T_{MAX}				±50	
$\Delta V_R/\Delta I_R$	Reverse Breakdown Voltage Change with Operating Current Change[6]	$I_{RMIN} \le I_R \le$ 1mA, $T_A = T_J$ = 25°C			0.2	1	mV
		$I_{RMIN} \le I_R \le$ 1mA $T_A = T_J = T_{MIN}$ to T_{MAX}				1.4	
		1mA $\le I_R \le$ 15mA, $T_A = T_J$ = 25°C			2	8	
		1mA $\le I_R \le$ 15mA $T_A = T_J = T_{MIN}$ to T_{MAX}				12	
Z_R	Reverse Dynamic Impedance	I_R = 1mA, f = 120Hz			0.5		Ω
		I_{AC} = 0.1 I_R					
e_N	Wideband Noise	I_R = 100µA 10Hz ≤ f ≤ 10kHz			93		μV_{rms}
ΔV_R	Reverse Breakdown Voltage Long Term Stability	t = 1000 hrs T = 25°C ±0.1°C I_R = 100µA			120		ppm
V_{HYST}	Thermal Hysteresis[7]	ΔT = –40°C to 125°C			1.4		mV

5.9 Electrical Characteristics: 8.2V Option

All other limits $T_A = T_J = 25°C$. The grades A, B and C designate initial Reverse Breakdown Voltage tolerances of ±0.1% and ±0.2% and 0.5% respectively.

PARAMETER		TEST CONDITIONS		MIN[4]	TYP[3]	MAX[4]	UNIT
V_R	Reverse Breakdown Voltage	I_R = 150µA			8.192		V
	Reverse Breakdown Voltage Tolerance [5]	I_R = 150µA	LM4050AIM3, LM4050AEM3			±8.2	mV
			LM4050BIM3, LM4050BEM3			±16	
			LM4050CIM3, LM4050CEM3			±41	
		Industrial Temp. Range $T_A = T_J = T_{MIN}$ to T_{MAX}	LM4050AIM3			±35	
			LM4050BIM3			±43	
			LM4050CIM3			±68	
		Extended Temp. Range $T_A = T_J = T_{MIN}$ to T_{MAX}	LM4050AEM3			±49	
			LM4050BEM3			±57	
			LM4050CEM3			±82	
I_{RMIN}	Minimum Operating Current	$T_A = T_J$ = 25°C			74	91	µA
		Industrial Temp. Range $T_A = T_J = T_{MIN}$ to T_{MAX}				95	
		Extended Temp. Range $T_A = T_J = T_{MIN}$ to T_{MAX}				100	
$\Delta V_R/\Delta T$	Average Reverse Breakdown Voltage Temperature Coefficient [5]	I_R = 10mA			±40		ppm/°C
		I_R = 1mA			±20		
		I_R = 150µA, $T_A = T_J$ = 25°C			±20		
		I_R = 150µA $T_A = T_J = T_{MIN}$ to T_{MAX}				±50	
$\Delta V_R/\Delta I_R$	Reverse Breakdown Voltage Change with Operating Current Change [6]	$I_{RMIN} \le I_R \le$ 1mA, $T_A = T_J$ = 25°C			0.9	3.1	mV
		$I_{RMIN} \le I_R \le$ 1mA $T_A = T_J = T_{MIN}$ to T_{MAX}				4.6	
		1mA $\le I_R \le$ 15mA, $T_A = T_J$ = 25°C			7	10	
		1mA $\le I_R \le$ 15mA $T_A = T_J = T_{MIN}$ to T_{MAX}				18	
Z_R	Reverse Dynamic Impedance	I_R = 1mA, f = 120Hz, I_{AC} = 0.1 I_R			0.6		Ω
e_N	Wideband Noise	I_R = 150µA 10Hz ≤ f ≤ 10kHz			150		μV_{rms}
ΔV_R	Reverse Breakdown Voltage Long Term Stability	t = 1000 hrs T = 25°C ±0.1°C I_R = 150µA			120		ppm
V_{HYST}	Thermal Hysteresis [7]	ΔT = −40°C to 125°C			2.3		mV

Copyright © 2025 Texas Instruments Incorporated

5.10 Electrical Characteristics: 10V Option

All other limits $T_A = T_J = 25°C$. The grades A, B and C designate initial Reverse Breakdown Voltage tolerances of ±0.1% and ±0.2% and 0.5% respectively.

PARAMETER		TEST CONDITIONS		MIN(4)	TYP(3)	MAX(4)	UNIT
V_R	Reverse Breakdown Voltage	I_R = 150µA			10		V
	Reverse Breakdown Voltage Tolerance (5)	I_R = 150µA	LM4050AIM3, LM4050AEM3			±10	mV (max)
			LM4050BIM3, LM4050BEM3			±20	
			LM4050CIM3, LM4050CEM3			±50	
		Industrial Temp. Range $T_A = T_J = T_{MIN}$ to T_{MAX}	LM4050AIM3			±43	
			LM4050BIM3			±53	
			LM4050CIM3			±83	
		Extended Temp. Range $T_A = T_J = T_{MIN}$ to T_{MAX}	LM4050AEM3			±60	
			LM4050BEM3			±70	
			LM4050CEM3			±100	
I_{RMIN}	Minimum Operating Current	$T_A = T_J = 25°C$			80	100	µA
		Industrial Temp. Range $T_A = T_J = T_{MIN}$ to T_{MAX}				103	
		Extended Temp. Range $T_A = T_J = T_{MIN}$ to T_{MAX}				110	
$\Delta V_R/\Delta T$	Average Reverse Breakdown Voltage Temperature Coefficient (5)	I_R = 10mA			±40		ppm/°C
		I_R = 1mA			±20		
		I_R = 150µA, $T_A = T_J = 25°C$			±20		
		I_R = 150µA $T_A = T_J = T_{MIN}$ to T_{MAX}				±50	
$\Delta V_R/\Delta I_R$	Reverse Breakdown Voltage Change with Operating Current Change (6)	$I_{RMIN} \le I_R \le$ 1mA, $T_A = T_J = 25°C$			2.5	3.8	mV
		$I_{RMIN} \le I_R \le$ 1mA $T_A = T_J = T_{MIN}$ to T_{MAX}				6	
		1mA $\le I_R \le$ 15mA, $T_A = T_J = 25°C$			8	12	
		1mA $\le I_R \le$ 15mA $T_A = T_J = T_{MIN}$ to T_{MAX}				23	
Z_R	Reverse Dynamic Impedance	I_R = 1mA, f = 120Hz, $I_{AC} = 0.1\ I_R$			0.7		Ω
e_N	Wideband Noise	I_R = 150µA 10Hz ≤ f ≤ 10kHz			150		μV_{rms}
ΔV_R	Reverse Breakdown Voltage Long Term Stability	t = 1000 hrs T = 25°C ±0.1°C I_R = 150µA			120		ppm
V_{HYST}	Thermal Hysteresis(7)	ΔT = −40°C to 125°C			2.8		mV

(1) The maximum power dissipation must be derated at elevated temperatures and is dictated by T_{Jmax} (maximum junction temperature), $R_{\theta JA}$ (junction to ambient thermal resistance), and T_A (ambient temperature). The maximum allowable power dissipation at any temperature is $PD_{max} = (T_{Jmax} - T_A)/R_{\theta JA}$ or the number given in the *Absolute Maximum Ratings*, whichever is lower. For the LM4050-N, T_{Jmax} = 150°C, and the typical thermal resistance ($R_{\theta JA}$), when board mounted, is 326°C/W for the SOT-23 package.
(2) High junction temperatures degrade operating lifetimes. Operating lifetime is de-rated for junction temperatures greater than 125°C.
(3) Typicals are at T_J = 25°C and represent most likely parametric norm.
(4) Limits are 100% production tested at 25°C. Limits over temperature are verified through correlation using Statistical Quality Control (SQC) methods. The limits are used to calculate National's AOQL.
(5) The overtemperature limit for Reverse Breakdown Voltage Tolerance is defined as the room temperature Reverse Breakdown Voltage Tolerance $\pm[(\Delta V_R/\Delta T)(\max\Delta T)(V_R)]$. Where, $\Delta V_R/\Delta T$ is the V_R temperature coefficient, maxΔT is the maximum difference in temperature from the reference point of 25°C to T_{MIN} or T_{MAX}, and V_R is the reverse breakdown voltage. The total overtemperature tolerance for the different grades in the industrial temperature range where maxΔT = 65°C is shown below: A-grade: ±0.425% = ±0.1% ±50ppm/°C × 65°C B-grade: ±0.525% = ±0.2% ±50ppm/°C × 65°C C-grade: ±0.825% = ±0.5% ±50ppm/°C × 65°C. Therefore, as an example, the A-grade LM4050-N-2.5 has an overtemperature Reverse Breakdown Voltage tolerance of ±2.5V × 0.425% = ±11 mV.
(6) Load regulation is measured on pulse basis from no load to the specified load current. Output changes due to die temperature change must be taken into account separately.
(7) Thermal hysteresis is defined as the difference in voltage measured at 25°C after cycling to temperature –40°C and the 25°C measurement after cycling to temperature 125°C.

5.11 Typical Characteristics

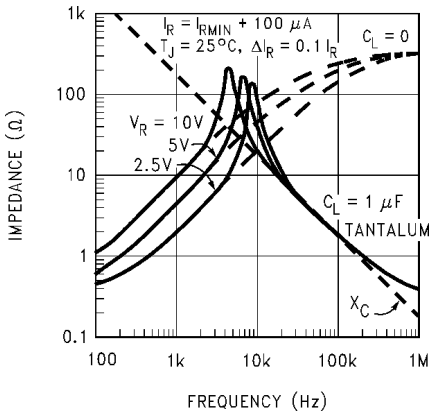

Figure 5-1. Output Impedance vs Frequency

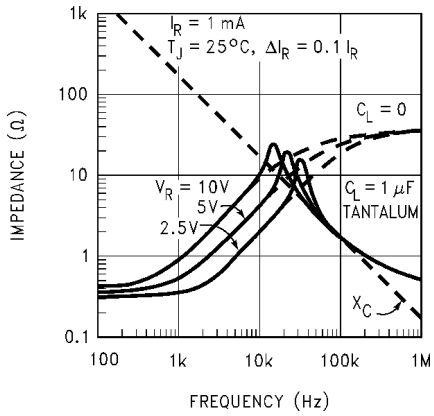

Figure 5-2. Output Impedance vs Frequency

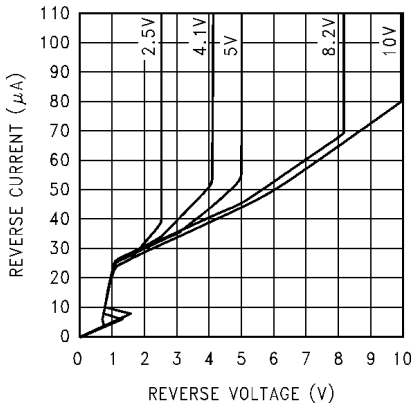

Figure 5-3. Reverse Characteristics and Minimum Operating Current

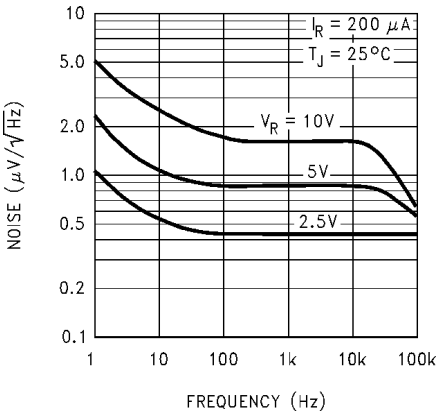

Figure 5-4. Noise Voltage vs Frequency

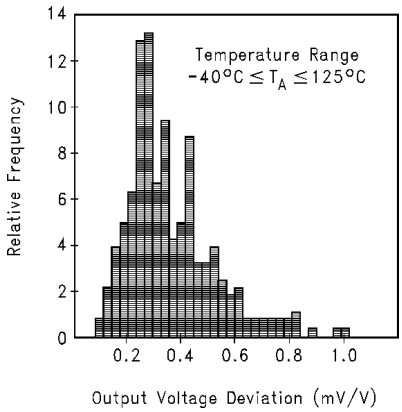

Figure 5-5. Thermal Hysteresis

Copyright © 2025 Texas Instruments Incorporated

5.11.1 Start-Up Characteristics

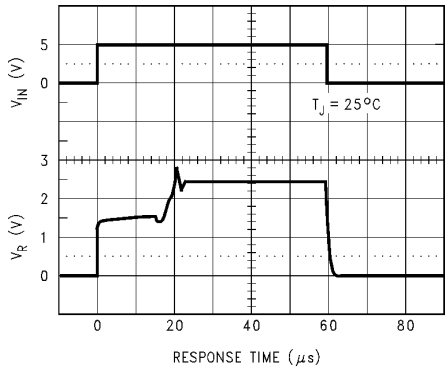

Figure 5-6. Input Voltage Step Response LM4050-N-2.5

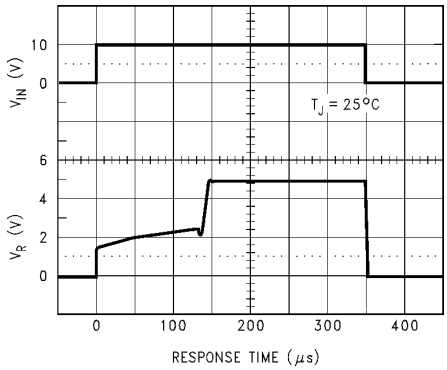

Figure 5-7. Input Voltage Step Response LM4050-N-5

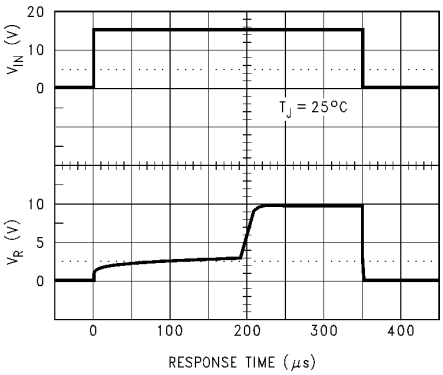

Figure 5-8. Input Voltage Step Response LM4050-N-10

6 Parameter Measurement Information

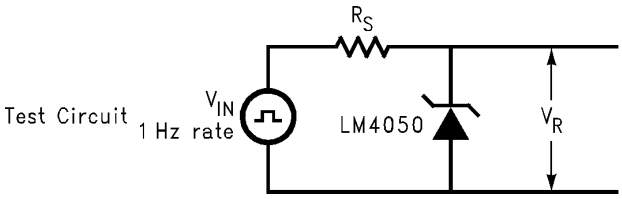

Figure 6-1. Test Circuit

7 Detailed Description

7.1 Overview

The LM4050-N device is a precision micropower shunt voltage reference. The part comes in 6 different fixed-output voltage options for space-constrained applications, removing the need for feedback resistors. The voltage tolerance accuracies are ±0.1%, ±0.2%, and ±0.5% for Versions A, B, and C, respectively. The LM4050-N comes in two application versions, Industrial and Extended temperature range, which are operational from –40°C to 85°C and –40°C to 125°C, respectively.

7.2 Functional Block Diagram

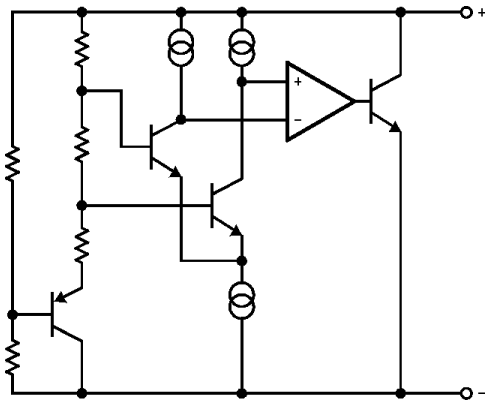

7.3 Feature Description

The LM4050-N behaves as a high-precision Zener diode. The voltage is regulated between the cathode and anode which is dependent on the current being supplied to the cathode. This current is needed for the LM4050-N to regulate within the specified limits. Refer to the minimum and maximum operating requirements for the specific voltage option used. The LM4050-N is internally compensated to be stable without the use of an output capacitor. However, if desired, a bypass capacitor can be used.

7.4 Device Functional Modes

The LM4050-N can only operate in closed loop due to the fact that the feedback resistors are internal to the device. Additionally, the output voltage cannot be adjusted for the same reason. The output voltage is regulated in a closed loop, provided the Rs (see *Section 7.2*) resistor is sized to deliver the current to the cathode within the limits specified for the fixed-voltage version being used.

Copyright © 2025 Texas Instruments Incorporated

8 Application and Implementation

Note

Information in the following applications sections is not part of the TI component specification, and TI does not warrant its accuracy or completeness. TI's customers are responsible for determining suitability of components for their purposes, as well as validating and testing their design implementation to confirm system functionality.

8.1 Application Information

The LM4050-N is a precision micropower curvature-corrected bandgap shunt voltage reference. For space critical applications, the LM4050-N is available in the sub-miniature SOT-23 surface-mount package. The LM4050-N has been designed for stable operation without the need of an external capacitor connected between the + pin and the − pin. If, however, a bypass capacitor is used, the LM4050-N remains stable. Reducing design effort is the availability of several fixed reverse breakdown voltages: 2.048V, 2.5V, 4.096V, 5V, 8.192V, and 10V. The minimum operating current increases from 60µA for the LM4050-N-2.0 to 100µA for the LM4050-N-10.0. All versions have a maximum operating current of 15mA.

LM4050-Ns in the SOT-23 packages have a parasitic Schottky diode between pin 2 (−) and pin 3 (Die attach interface contact). Therefore, pin 3 of the SOT-23 package must be left floating or connected to pin 2.

The 4.096V version allows single 5V 12-bit ADCs or DACs to operate with an LSB equal to 1mV. For 12-bit ADCs or DACs that operate on supplies of 10V or greater, the 8.192V version gives 2mV per LSB.

The typical thermal hysteresis specification is defined as the change in 25°C voltage measured after thermal cycling. The device is thermal cycled to temperature –40°C and then measured at 25°C. Next the device is thermal cycled to temperature 125°C and again measured at 25°C. The resulting V_{OUT} delta shift between the 25°C measurements is thermal hysteresis. Thermal hysteresis is common in precision references and is induced by thermal-mechanical package stress. Changes in environmental storage temperature, operating temperature and board mounting temperature are all factors that can contribute to thermal hysteresis.

In a conventional shunt regulator application (Figure 8-1) , an external series resistor (R_S) is connected between the supply voltage and the LM4050-N. R_S determines the current that flows through the load (I_L) and the LM4050-N (I_Q). Since load current and supply voltage can vary, R_S must be small enough to supply at least the maximum I_{RMIN} (spec. table) to the LM4050-N even when the supply voltage is at the minimum and the load current is at the maximum value. When the supply voltage is at the maximum and I_L is at the minimum, R_S must be large enough so that the current flowing through the LM4050-N is less than 15mA.

R_S is determined by the supply voltage, (V_S), the load and operating current, (I_L and I_Q), and the LM4050-N's reverse breakdown voltage, V_R.

$$R_S = \frac{V_S - V_R}{I_L + I_Q} \tag{1}$$

8.2 Typical Applications

8.2.1 Shunt Regulator

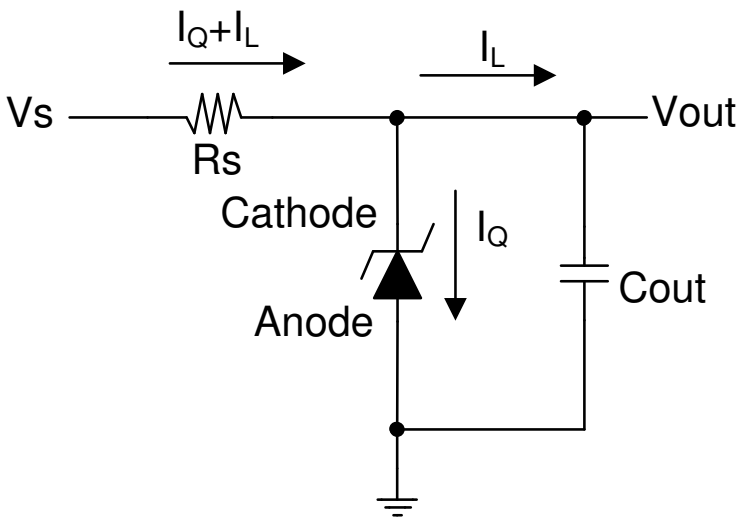

Figure 8-1. Shunt Regulator Schematic

8.2.1.1 Design Requirements

For this design example, use the parameters listed in Table 8-1 as the input parameters.

Table 8-1. Design Parameters

DESIGN PARAMETER	VALUE
Output Voltage	2V, 2.5V, 4.1V, 5V, 8.2V, 10V
Minimum Cathode Current	41µA, 41µA, 52µA, 56µA, 74µA, 80µA (typical) (Respective to Above field)

8.2.1.2 Detailed Design Procedure

R_S sets the cathode current of the shunt reference. Make sure that this current is greater than the minimum cathode current to maintain regulation and less that the maximum reverse current to prevent overheating of the shunt reference. A suggested good starting value for most designs is from approximately 0.5mA to 1mA.

$$I_{RMIN} < \frac{V_s - V_{out}}{R_s} < 0.015A \tag{2}$$

8.2.1.3 Application Curve

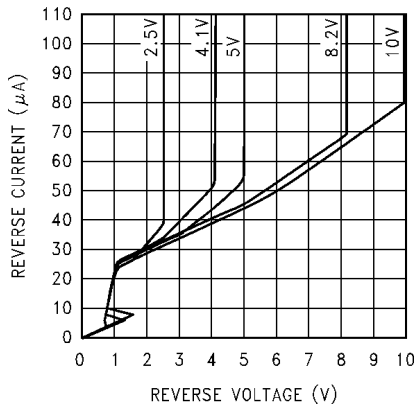

Figure 8-2. Reverse Characteristics and Minimum Operating Current

Copyright © 2025 Texas Instruments Incorporated

8.2.2 Precision Reference for an Analog-to-Digital Converter

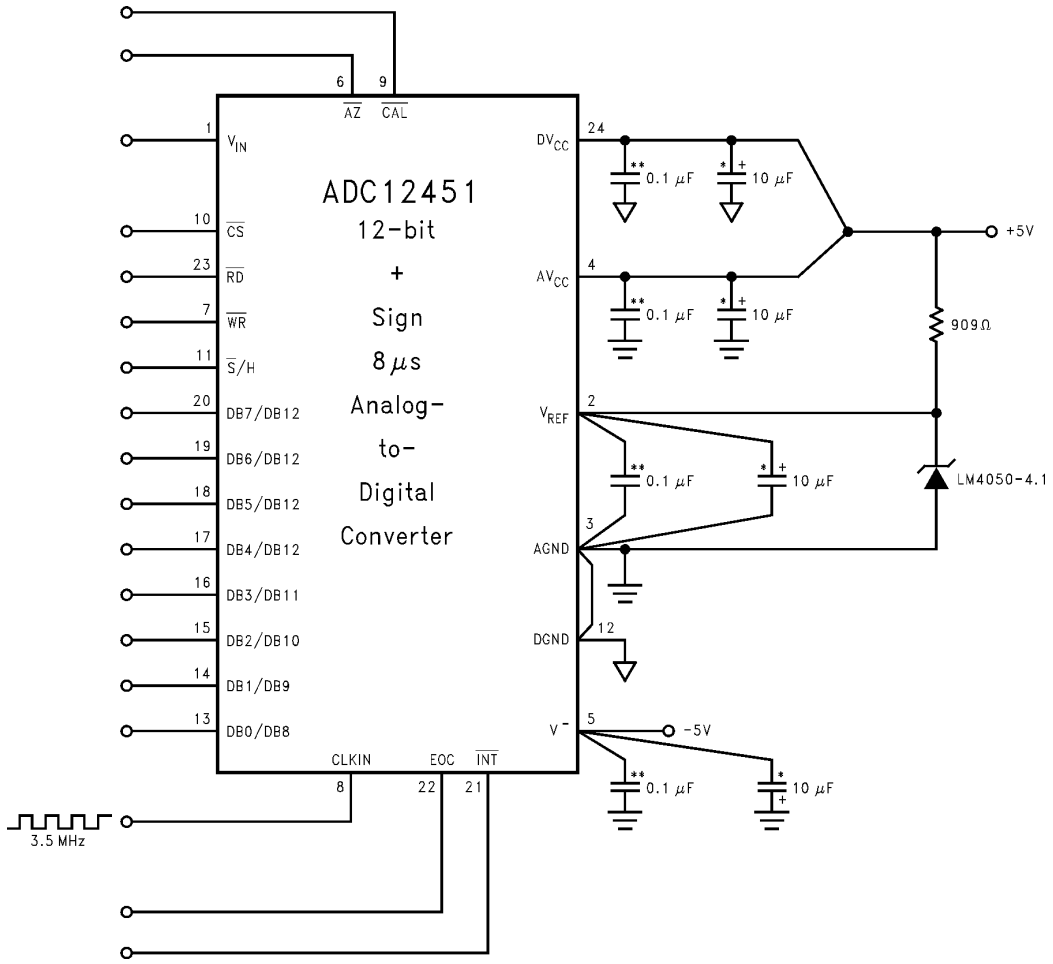

**Ceramic monolithic *Tantalum

Figure 8-3. LM4050-N-4.1'S Nominal 4.096 Breakdown Voltage Gives ADC12451 1MV/LSB

8.2.2.1 Design Requirements

For this design example, use the parameters listed in Table 8-2 as the input parameters.

Table 8-2. Design Parameters

DESIGN PARAMETER	VALUE
Output Voltage	4.1V

8.2.2.2 Detailed Design Procedure

Set I_Q to approximately 1mA.

$$R_s = \frac{V_s - V_{out}}{I_Q} \tag{3}$$

where

- Rs = 900Ω, nearest preferred Value = 909Ω

8.2.3 V_{OUT} Bounded Amplifier

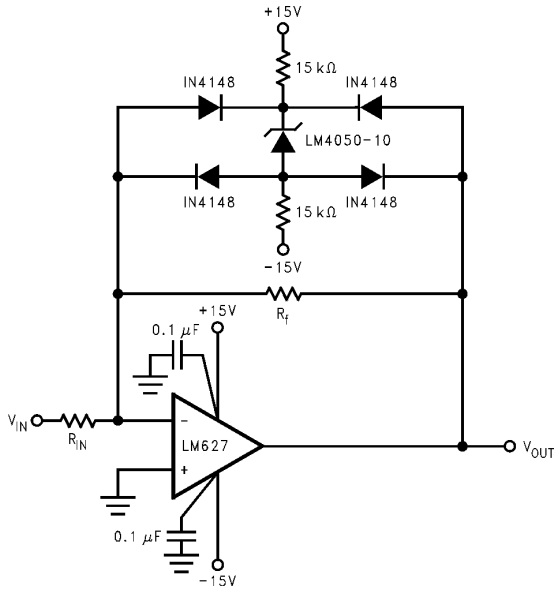

Bounded amplifier reduces saturation-induced delays and can prevent succeeding stage damage. Nominal clamping voltage is ±11.5V (LM4050-N's reverse breakdown voltage +2 diode V_F).

Figure 8-4. Bounded Amplifier

8.2.3.1 Design Requirements

The only design requirement is V_{OUT} bounded to ±11.5V.

8.2.3.2 Detailed Design Procedure

$$V_{bound} = 2 \times V_{wd} + V_{out} \tag{4}$$

$$V_{fwd} = 0.7\ V \tag{5}$$

$$V_{bound} = (2 \times 0.7\ V) + 10\ V \tag{6}$$

Set I_Q to approximately 0.6mA.

$$R_s = \frac{V_s + |-V_s| - V_{out}}{I_Q} \tag{7}$$

$$R_s = \frac{30\ V - 10\ V}{0.0006A} \tag{8}$$

where

- R_S (total) = 33kΩ (select 2 × 15kΩ)

Copyright © 2025 Texas Instruments Incorporated

8.2.4 V_{IN} Bounded Amplifier

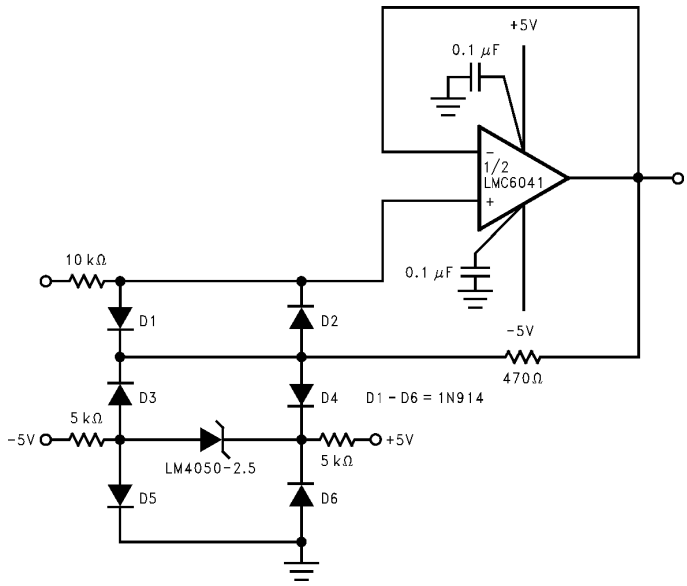

The bounding voltage is ±4V with the LM4050-N-2.5 (LM4050-N's reverse breakdown voltage + 3 diode V_F).

Figure 8-5. Protecting Op Amp Input

8.2.4.1 Design Requirements

The only design requirement is V_{IN} bounded to ±4.6V.

8.2.4.2 Detailed Design Procedure

$$V_{bound} = 3 \times V_{wd} + V_{out} \tag{9}$$

$$V_{fwd} = 0.7\ V \tag{10}$$

$$V_{bound} = (3 \times 0.7\ V) + 2.5\ V \tag{11}$$

Set I_Q to approximately 0.6mA.

$$R_s = \frac{V_s + |-V_s| - V_{out}}{I_Q} \tag{12}$$

$$R_s = \frac{10\ V - 2.5\ V}{0.0006A} \tag{13}$$

where

- R_S (total) = 12.5kΩ (select 2 × 5kΩ)

8.2.5 ±4.096 Precision Reference

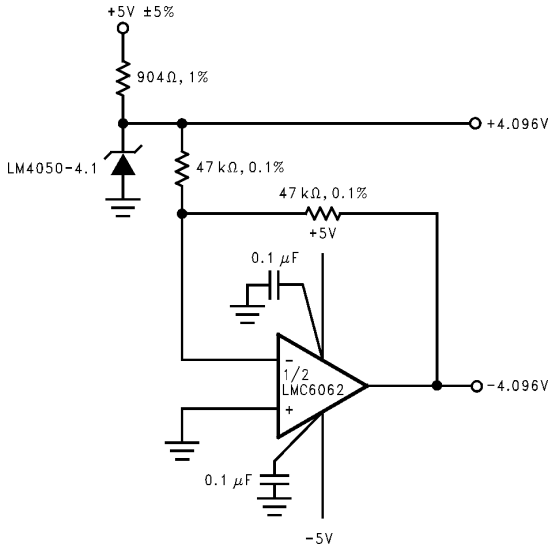

Figure 8-6. Precision ±4.096v Reference

8.2.5.1 Design Requirements

The only design requirement is a positive and negative reference generated from a positive reference, ±4.096V.

8.2.5.2 Detailed Design Procedure

Follow the design procedure set in *Section 8.2.2*.

Copyright © 2025 Texas Instruments Incorporated

8.2.6 ±1mA Precision Current Sources

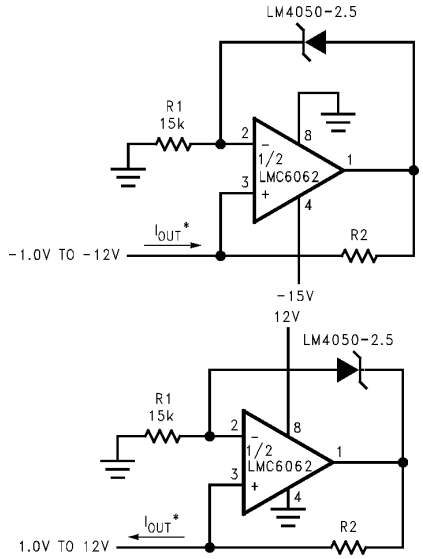

$$I_{out} = \frac{V_{out}}{R2}$$

Figure 8-7. Precision 1µA to 1mA Current Source (±)

8.2.6.1 Design Requirements

The only design requirement is a dual ±1mA current source.

8.2.6.2 Detailed Design Procedure

Set worse-case cathode current to 0.6mA.

$$V_{out_{opamp\,max}} = 12\ V \tag{14}$$

$$R1 = \frac{Vout_{Opampmax} - Vout}{I_Q} \tag{15}$$

$$R1 = \frac{12\ V - 2.5\ V}{0.0006A} \tag{16}$$

$$R1 = 1.583 \times 10^4\ \Omega \tag{17}$$

$$I_{out} = \frac{V_{out}}{R2} \tag{18}$$

8.3 Power Supply Recommendations

Noise on the power supply input to R_S can affect output noise performance. Noise performance can be reduced by using an optional bypass capacitor at the input side of R_S and Ground. TI recommends a 0.1µF ceramic capacitor or higher.

8.4 Layout

8.4.1 Layout Guidelines

Place R_S as close to the cathode as possible. If an input and output capacitor is used, place this as close to the reference as possible.

8.4.2 Layout Example

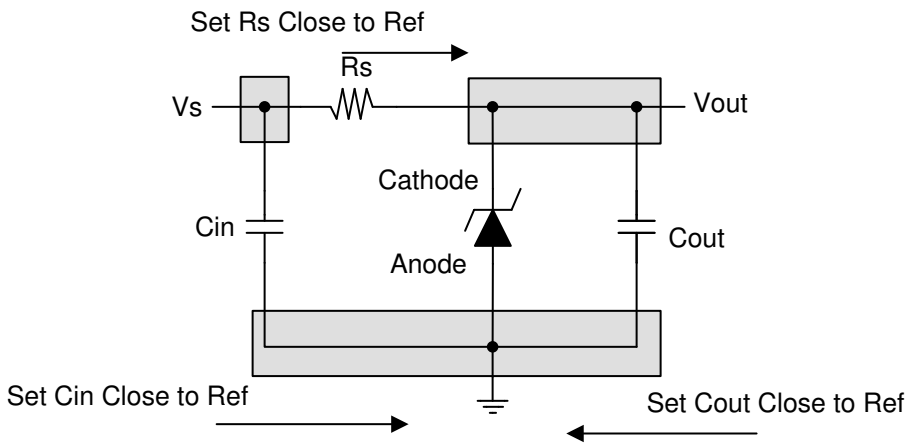

Figure 8-8. Layout Recommendation

Copyright © 2025 Texas Instruments Incorporated

9 Device and Documentation Support

9.1 Support Resources

TI E2E™ support forums are an engineer's go-to source for fast, verified answers and design help — straight from the experts. Search existing answers or ask your own question to get the quick design help you need.

Linked content is provided "AS IS" by the respective contributors. They do not constitute TI specifications and do not necessarily reflect TI's views; see TI's Terms of Use.

9.2 Trademarks

TI E2E™ is a trademark of Texas Instruments.
All trademarks are the property of their respective owners.

9.3 Electrostatic Discharge Caution

This integrated circuit can be damaged by ESD. Texas Instruments recommends that all integrated circuits be handled with appropriate precautions. Failure to observe proper handling and installation procedures can cause damage.

ESD damage can range from subtle performance degradation to complete device failure. Precision integrated circuits may be more susceptible to damage because very small parametric changes could cause the device not to meet its published specifications.

9.4 Glossary

TI Glossary	This glossary lists and explains terms, acronyms, and definitions.

10 Revision History

NOTE: Page numbers for previous revisions may differ from page numbers in the current version.

Changes from Revision G (September 2015) to Revision H (March 2025) — **Page**

- Updated the numbering format for tables, figures, and cross-references throughout the document..... 1
- Updated *Applications* links..... 1
- Added information about high EMI applications..... 3
- Removed machine model (MM) ESD specification and revised the CDM ESD specification..... 4
- Removed industrial temperature range part numbers from extended temperature range row and corrected typos..... 6
- Updated reverse breakdown voltage change with operating current change..... 11
- Clarified orderable part number information. 24

Changes from Revision F (June 2015) to Revision G (September 2015) — **Page**

- Added *ESD Ratings* table, *Feature Description* section, *Device Functional Modes*, *Application and Implementation* section, *Power Supply Recommendations* section, *Layout* section, *Device and Documentation Support* section, and *Mechanical, Packaging, and Orderable Information* section..... 1
- Removed Vapor Phase and Infrared Lead Temperatures from Abs Max Ratings table. 4

Changes from Revision E (April 2013) to Revision F (April 2015) — **Page**

- Deleted "-25" from (LM4050-N) in Key Specifications title and "A/-Q1B/-Q1C" from Key Specification re: auto grade..... 1
- Added Maximum Junction Temperature to Abs Max Ratings table 4
- Added table notes to Operating Ratings table to clarify operating and high junction temperature ranges..... 5
- Deleted "-N" from part numbers in EC table "Limits" column headers 6

Changes from Revision D (April 2013) to Revision E (April 2013)	Page
• Changed layout of National Data Sheet to TI format	21

11 Mechanical, Packaging, and Orderable Information

The following pages include mechanical, packaging, and orderable information. This information is the most current data available for the designated devices. This data is subject to change without notice and revision of this document. For browser-based versions of this data sheet, refer to the left-hand navigation. Part numbers containing an "X" contain the same electrical properties as those which do not contain an "X".

Copyright © 2025 Texas Instruments Incorporated

PACKAGING INFORMATION

Orderable part number	Status (1)	Material type (2)	Package | Pins	Package qty | Carrier	RoHS (3)	Lead finish/ Ball material (4)	MSL rating/ Peak reflow (5)	Op temp (°C)	Part marking (6)
LM4050AEM3-10/NOPB	Active	Production	SOT-23 (DBZ) | 3	3000 | SMALL T&R	Yes	SN	Level-1-260C-UNLIM	-40 to 125	RGA
LM4050AEM3-10/NOPB.A	Active	Production	SOT-23 (DBZ) | 3	3000 | SMALL T&R	Yes	SN	Level-1-260C-UNLIM	-40 to 125	RGA
LM4050AEM3-10/NOPB.B	Active	Production	SOT-23 (DBZ) | 3	3000 | SMALL T&R	Yes	SN	Level-1-260C-UNLIM	-40 to 125	RGA
LM4050AEM3-2.0/NO.A	Active	Production	SOT-23 (DBZ) | 3	3000 | LARGE T&R	Yes	SN	Level-1-260C-UNLIM	-40 to 125	RNA
LM4050AEM3-2.0/NOPB	Active	Production	SOT-23 (DBZ) | 3	3000 | LARGE T&R	Yes	SN	Level-1-260C-UNLIM	-40 to 125	RNA
LM4050AEM3-2.5/NO.A	Active	Production	SOT-23 (DBZ) | 3	3000 | SMALL T&R	Yes	SN	Level-1-260C-UNLIM	-40 to 125	RCA
LM4050AEM3-2.5/NOPB	Active	Production	SOT-23 (DBZ) | 3	3000 | SMALL T&R	Yes	SN	Level-1-260C-UNLIM	-40 to 125	RCA
LM4050AEM3-5.0/NO.A	Active	Production	SOT-23 (DBZ) | 3	3000 | SMALL T&R	Yes	SN	Level-1-260C-UNLIM	-40 to 125	REA
LM4050AEM3-5.0/NOPB	Active	Production	SOT-23 (DBZ) | 3	3000 | SMALL T&R	Yes	SN	Level-1-260C-UNLIM	-40 to 125	REA
LM4050AEM3-8.2/NO.A	Active	Production	SOT-23 (DBZ) | 3	3000 | LARGE T&R	Yes	SN	Level-1-260C-UNLIM	-40 to 125	RFA
LM4050AEM3-8.2/NOPB	Active	Production	SOT-23 (DBZ) | 3	3000 | LARGE T&R	Yes	SN	Level-1-260C-UNLIM	-40 to 125	RFA
LM4050AEM3X-10/NO.A	Active	Production	SOT-23 (DBZ) | 3	3000 | LARGE T&R	Yes	SN	Level-1-260C-UNLIM	-40 to 125	RGA
LM4050AEM3X-10/NO.B	Active	Production	SOT-23 (DBZ) | 3	3000 | LARGE T&R	Yes	SN	Level-1-260C-UNLIM	-40 to 125	RGA
LM4050AEM3X-10/NOPB	Active	Production	SOT-23 (DBZ) | 3	3000 | LARGE T&R	Yes	SN	Level-1-260C-UNLIM	-40 to 125	RGA
LM4050AEM3X-2.5/NO.A	Active	Production	SOT-23 (DBZ) | 3	3000 | LARGE T&R	Yes	SN	Level-1-260C-UNLIM	-40 to 125	RCA
LM4050AEM3X-2.5/NOPB	Active	Production	SOT-23 (DBZ) | 3	3000 | LARGE T&R	Yes	SN	Level-1-260C-UNLIM	-40 to 125	RCA
LM4050AEM3X-5.0/NO.A	Active	Production	SOT-23 (DBZ) | 3	3000 | LARGE T&R	Yes	SN	Level-1-260C-UNLIM	-40 to 125	REA
LM4050AEM3X-5.0/NOPB	Active	Production	SOT-23 (DBZ) | 3	3000 | LARGE T&R	Yes	SN	Level-1-260C-UNLIM	-40 to 125	REA
LM4050AIM3-10/NOPB	Active	Production	SOT-23 (DBZ) | 3	3000 | LARGE T&R	Yes	SN	Level-1-260C-UNLIM	-40 to 85	RGA
LM4050AIM3-10/NOPB.A	Active	Production	SOT-23 (DBZ) | 3	3000 | LARGE T&R	Yes	SN	Level-1-260C-UNLIM	-40 to 85	RGA
LM4050AIM3-10/NOPB.B	Active	Production	SOT-23 (DBZ) | 3	3000 | LARGE T&R	Yes	SN	Level-1-260C-UNLIM	-40 to 85	RGA
LM4050AIM3-2.5/NO.A	Active	Production	SOT-23 (DBZ) | 3	3000 | SMALL T&R	Yes	SN	Level-1-260C-UNLIM	-40 to 125	RCA
LM4050AIM3-2.5/NOPB	Active	Production	SOT-23 (DBZ) | 3	3000 | SMALL T&R	Yes	SN	Level-1-260C-UNLIM	-40 to 85	RCA
LM4050AIM3-4.1/NO.A	Active	Production	SOT-23 (DBZ) | 3	3000 | SMALL T&R	Yes	SN	Level-1-260C-UNLIM	-40 to 125	RDA
LM4050AIM3-4.1/NOPB	Active	Production	SOT-23 (DBZ) | 3	3000 | SMALL T&R	Yes	SN	Level-1-260C-UNLIM	-40 to 85	RDA
LM4050AIM3-5.0/NO.A	Active	Production	SOT-23 (DBZ) | 3	3000 | SMALL T&R	Yes	SN	Level-1-260C-UNLIM	-40 to 125	REA
LM4050AIM3-5.0/NOPB	Active	Production	SOT-23 (DBZ) | 3	3000 | SMALL T&R	Yes	SN	Level-1-260C-UNLIM	-40 to 85	REA
LM4050AIM3X-2.5/NO.A	Active	Production	SOT-23 (DBZ) | 3	3000 | LARGE T&R	Yes	SN	Level-1-260C-UNLIM	-40 to 125	RCA
LM4050AIM3X-2.5/NOPB	Active	Production	SOT-23 (DBZ) | 3	3000 | LARGE T&R	Yes	SN	Level-1-260C-UNLIM	-40 to 85	RCA

Orderable part number	Status (1)	Material type (2)	Package | Pins	Package qty | Carrier	RoHS (3)	Lead finish/ Ball material (4)	MSL rating/ Peak reflow (5)	Op temp (°C)	Part marking (6)
LM4050AIM3X-4.1/NO.A	Active	Production	SOT-23 (DBZ) | 3	3000 | LARGE T&R	Yes	SN	Level-1-260C-UNLIM	-40 to 125	RDA
LM4050AIM3X-4.1/NOPB	Active	Production	SOT-23 (DBZ) | 3	3000 | LARGE T&R	Yes	SN	Level-1-260C-UNLIM	-40 to 85	RDA
LM4050AIM3X-5.0/NO.A	Active	Production	SOT-23 (DBZ) | 3	3000 | LARGE T&R	Yes	SN	Level-1-260C-UNLIM	-40 to 125	REA
LM4050AIM3X-5.0/NOPB	Active	Production	SOT-23 (DBZ) | 3	3000 | LARGE T&R	Yes	SN	Level-1-260C-UNLIM	-40 to 85	REA
LM4050BEM3-10/NOPB	Active	Production	SOT-23 (DBZ) | 3	3000 | SMALL T&R	Yes	SN	Level-1-260C-UNLIM	-40 to 125	RGB
LM4050BEM3-10/NOPB.A	Active	Production	SOT-23 (DBZ) | 3	3000 | SMALL T&R	Yes	SN	Level-1-260C-UNLIM	-40 to 125	RGB
LM4050BEM3-10/NOPB.B	Active	Production	SOT-23 (DBZ) | 3	3000 | SMALL T&R	Yes	SN	Level-1-260C-UNLIM	-40 to 125	RGB
LM4050BEM3-2.5/NO.A	Active	Production	SOT-23 (DBZ) | 3	3000 | SMALL T&R	Yes	SN	Level-1-260C-UNLIM	-40 to 125	RCB
LM4050BEM3-2.5/NOPB	Active	Production	SOT-23 (DBZ) | 3	3000 | SMALL T&R	Yes	SN	Level-1-260C-UNLIM	-40 to 125	RCB
LM4050BEM3-4.1/NO.A	Active	Production	SOT-23 (DBZ) | 3	3000 | LARGE T&R	Yes	SN	Level-1-260C-UNLIM	-40 to 125	RDB
LM4050BEM3-4.1/NOPB	Active	Production	SOT-23 (DBZ) | 3	3000 | LARGE T&R	Yes	SN	Level-1-260C-UNLIM	-40 to 125	RDB
LM4050BEM3-5.0/NO.A	Active	Production	SOT-23 (DBZ) | 3	3000 | SMALL T&R	Yes	SN	Level-1-260C-UNLIM	-40 to 125	REB
LM4050BEM3-5.0/NOPB	Active	Production	SOT-23 (DBZ) | 3	3000 | SMALL T&R	Yes	SN	Level-1-260C-UNLIM	-40 to 125	REB
LM4050BEM3-8.2/NOPB	Active	Production	SOT-23 (DBZ) | 3	3000 | LARGE T&R	Yes	SN	Level-1-260C-UNLIM	-40 to 125	RFB
LM4050BEM3X-10/NO.A	Active	Production	SOT-23 (DBZ) | 3	3000 | LARGE T&R	Yes	SN	Level-1-260C-UNLIM	-40 to 125	RGB
LM4050BEM3X-10/NOPB	Active	Production	SOT-23 (DBZ) | 3	3000 | LARGE T&R	Yes	SN	Level-1-260C-UNLIM	-40 to 125	RGB
LM4050BEM3X-2.5/NO.A	Active	Production	SOT-23 (DBZ) | 3	3000 | LARGE T&R	Yes	SN	Level-1-260C-UNLIM	-40 to 125	RCB
LM4050BEM3X-2.5/NOPB	Active	Production	SOT-23 (DBZ) | 3	3000 | LARGE T&R	Yes	SN	Level-1-260C-UNLIM	-40 to 125	RCB
LM4050BEM3X-5.0/NO.A	Active	Production	SOT-23 (DBZ) | 3	3000 | LARGE T&R	Yes	SN	Level-1-260C-UNLIM	-40 to 125	REB
LM4050BEM3X-5.0/NOPB	Active	Production	SOT-23 (DBZ) | 3	3000 | LARGE T&R	Yes	SN	Level-1-260C-UNLIM	-40 to 125	REB
LM4050BIM3-10/NOPB	Active	Production	SOT-23 (DBZ) | 3	1000 | LARGE T&R	Yes	SN	Level-1-260C-UNLIM	-40 to 85	RGB
LM4050BIM3-10/NOPB.B	Active	Production	SOT-23 (DBZ) | 3	1000 | LARGE T&R	Yes	SN	Level-1-260C-UNLIM	-40 to 85	RGB
LM4050BIM3-2.5/NO.A	Active	Production	SOT-23 (DBZ) | 3	3000 | SMALL T&R	Yes	SN	Level-1-260C-UNLIM	-40 to 125	RCB
LM4050BIM3-2.5/NOPB	Active	Production	SOT-23 (DBZ) | 3	3000 | SMALL T&R	Yes	SN	Level-1-260C-UNLIM	-40 to 85	RCB
LM4050BIM3-4.1/NO.A	Active	Production	SOT-23 (DBZ) | 3	3000 | SMALL T&R	Yes	SN	Level-1-260C-UNLIM	-40 to 125	RDB
LM4050BIM3-4.1/NOPB	Active	Production	SOT-23 (DBZ) | 3	3000 | SMALL T&R	Yes	SN	Level-1-260C-UNLIM	-40 to 85	RDB
LM4050BIM3-5.0/NO.A	Active	Production	SOT-23 (DBZ) | 3	3000 | SMALL T&R	Yes	SN	Level-1-260C-UNLIM	-40 to 125	REB
LM4050BIM3-5.0/NOPB	Active	Production	SOT-23 (DBZ) | 3	3000 | SMALL T&R	Yes	SN	Level-1-260C-UNLIM	-40 to 85	REB
LM4050BIM3X-2.0/NO.A	Active	Production	SOT-23 (DBZ) | 3	3000 | LARGE T&R	Yes	SN	Level-1-260C-UNLIM	-40 to 125	RNB
LM4050BIM3X-2.0/NOPB	Active	Production	SOT-23 (DBZ) | 3	3000 | LARGE T&R	Yes	SN	Level-1-260C-UNLIM	-40 to 85	RNB
LM4050BIM3X-2.5/NO.A	Active	Production	SOT-23 (DBZ) | 3	3000 | LARGE T&R	Yes	SN	Level-1-260C-UNLIM	-40 to 125	RCB

Orderable part number	Status (1)	Material type (2)	Package | Pins	Package qty | Carrier	RoHS (3)	Lead finish/ Ball material (4)	MSL rating/ Peak reflow (5)	Op temp (°C)	Part marking (6)
LM4050BIM3X-2.5/NOPB	Active	Production	SOT-23 (DBZ) | 3	3000 | LARGE T&R	Yes	SN	Level-1-260C-UNLIM	-40 to 85	RCB
LM4050BIM3X-4.1/NO.A	Active	Production	SOT-23 (DBZ) | 3	3000 | LARGE T&R	Yes	SN	Level-1-260C-UNLIM	-40 to 125	RDB
LM4050BIM3X-4.1/NOPB	Active	Production	SOT-23 (DBZ) | 3	3000 | LARGE T&R	Yes	SN	Level-1-260C-UNLIM	-40 to 85	RDB
LM4050BIM3X-5.0/NO.A	Active	Production	SOT-23 (DBZ) | 3	3000 | LARGE T&R	Yes	SN	Level-1-260C-UNLIM	-40 to 125	REB
LM4050BIM3X-5.0/NOPB	Active	Production	SOT-23 (DBZ) | 3	3000 | LARGE T&R	Yes	SN	Level-1-260C-UNLIM	-40 to 85	REB
LM4050CEM3-10/NOPB	Active	Production	SOT-23 (DBZ) | 3	1000 | LARGE T&R	Yes	SN	Level-1-260C-UNLIM	-	RGC
LM4050CEM3-10/NOPB.B	Active	Production	SOT-23 (DBZ) | 3	1000 | LARGE T&R	Yes	SN	Level-1-260C-UNLIM	-40 to 125	RGC
LM4050CEM3-2.5/NO.A	Active	Production	SOT-23 (DBZ) | 3	3000 | SMALL T&R	Yes	SN	Level-1-260C-UNLIM	-40 to 125	RCC
LM4050CEM3-2.5/NOPB	Active	Production	SOT-23 (DBZ) | 3	3000 | SMALL T&R	Yes	SN	Level-1-260C-UNLIM	-40 to 125	RCC
LM4050CEM3-5.0/NO.A	Active	Production	SOT-23 (DBZ) | 3	3000 | SMALL T&R	Yes	SN	Level-1-260C-UNLIM	-40 to 125	REC
LM4050CEM3-5.0/NOPB	Active	Production	SOT-23 (DBZ) | 3	3000 | SMALL T&R	Yes	SN	Level-1-260C-UNLIM	-	REC
LM4050CEM3X-2.5/NO.A	Active	Production	SOT-23 (DBZ) | 3	3000 | LARGE T&R	Yes	SN	Level-1-260C-UNLIM	-40 to 125	RCC
LM4050CEM3X-2.5/NOPB	Active	Production	SOT-23 (DBZ) | 3	3000 | LARGE T&R	Yes	SN	Level-1-260C-UNLIM	-40 to 125	RCC
LM4050CEM3X-5.0/NO.A	Active	Production	SOT-23 (DBZ) | 3	3000 | LARGE T&R	Yes	SN	Level-1-260C-UNLIM	-40 to 125	REC
LM4050CEM3X-5.0/NOPB	Active	Production	SOT-23 (DBZ) | 3	3000 | LARGE T&R	Yes	SN	Level-1-260C-UNLIM	-	REC
LM4050CIM3-10/NOPB	Active	Production	SOT-23 (DBZ) | 3	3000 | LARGE T&R	Yes	SN	Level-1-260C-UNLIM	-40 to 85	RGC
LM4050CIM3-10/NOPB.A	Active	Production	SOT-23 (DBZ) | 3	3000 | LARGE T&R	Yes	SN	Level-1-260C-UNLIM	-40 to 85	RGC
LM4050CIM3-10/NOPB.B	Active	Production	SOT-23 (DBZ) | 3	3000 | LARGE T&R	Yes	SN	Level-1-260C-UNLIM	-40 to 85	RGC
LM4050CIM3-2.5/NO.A	Active	Production	SOT-23 (DBZ) | 3	3000 | SMALL T&R	Yes	SN	Level-1-260C-UNLIM	-40 to 125	RCC
LM4050CIM3-2.5/NOPB	Active	Production	SOT-23 (DBZ) | 3	3000 | SMALL T&R	Yes	SN	Level-1-260C-UNLIM	-40 to 85	RCC
LM4050CIM3-4.1/NO.A	Active	Production	SOT-23 (DBZ) | 3	3000 | SMALL T&R	Yes	SN	Level-1-260C-UNLIM	-40 to 125	RDC
LM4050CIM3-4.1/NOPB	Active	Production	SOT-23 (DBZ) | 3	3000 | SMALL T&R	Yes	SN	Level-1-260C-UNLIM	-40 to 85	RDC
LM4050CIM3-5.0/NO.A	Active	Production	SOT-23 (DBZ) | 3	3000 | SMALL T&R	Yes	SN	Level-1-260C-UNLIM	-40 to 125	REC
LM4050CIM3-5.0/NOPB	Active	Production	SOT-23 (DBZ) | 3	3000 | SMALL T&R	Yes	SN	Level-1-260C-UNLIM	-40 to 85	REC
LM4050CIM3X-2.0/NO.A	Active	Production	SOT-23 (DBZ) | 3	3000 | LARGE T&R	Yes	SN	Level-1-260C-UNLIM	-40 to 125	RNC
LM4050CIM3X-2.0/NOPB	Active	Production	SOT-23 (DBZ) | 3	3000 | LARGE T&R	Yes	SN	Level-1-260C-UNLIM	-40 to 85	RNC
LM4050CIM3X-2.5/NO.A	Active	Production	SOT-23 (DBZ) | 3	3000 | LARGE T&R	Yes	SN	Level-1-260C-UNLIM	-40 to 125	RCC
LM4050CIM3X-2.5/NOPB	Active	Production	SOT-23 (DBZ) | 3	3000 | LARGE T&R	Yes	SN	Level-1-260C-UNLIM	-40 to 85	RCC
LM4050CIM3X-4.1/NO.A	Active	Production	SOT-23 (DBZ) | 3	3000 | LARGE T&R	Yes	SN	Level-1-260C-UNLIM	-40 to 125	RDC
LM4050CIM3X-4.1/NOPB	Active	Production	SOT-23 (DBZ) | 3	3000 | LARGE T&R	Yes	SN	Level-1-260C-UNLIM	-40 to 85	RDC
LM4050CIM3X-5.0/NO.A	Active	Production	SOT-23 (DBZ) | 3	3000 | LARGE T&R	Yes	SN	Level-1-260C-UNLIM	-40 to 125	REC

Orderable part number	Status (1)	Material type (2)	Package | Pins	Package qty | Carrier	RoHS (3)	Lead finish/ Ball material (4)	MSL rating/ Peak reflow (5)	Op temp (°C)	Part marking (6)
LM4050CIM3X-5.0/NOPB	Active	Production	SOT-23 (DBZ) | 3	3000 | LARGE T&R	Yes	SN	Level-1-260C-UNLIM	-40 to 85	REC
LM4050QAEM3-10/NOPB	Obsolete	Production	SOT-23 (DBZ) | 3	-	-	Call TI	Call TI	-40 to 125	RYA
LM4050QAEM3-2.0/NO.A	Active	Production	SOT-23 (DBZ) | 3	3000 | LARGE T&R	Yes	SN	Level-1-260C-UNLIM	-40 to 125	RSA
LM4050QAEM3-2.0/NOPB	Active	Production	SOT-23 (DBZ) | 3	3000 | LARGE T&R	Yes	SN	Level-1-260C-UNLIM	-40 to 125	RSA
LM4050QAEM3-2.5/NO.A	Active	Production	SOT-23 (DBZ) | 3	3000 | LARGE T&R	Yes	SN	Level-1-260C-UNLIM	-40 to 125	RTA
LM4050QAEM3-2.5/NOPB	Active	Production	SOT-23 (DBZ) | 3	3000 | LARGE T&R	Yes	SN	Level-1-260C-UNLIM	-40 to 125	RTA
LM4050QAEM3-4.1/NO.A	Active	Production	SOT-23 (DBZ) | 3	3000 | LARGE T&R	Yes	SN	Level-1-260C-UNLIM	-40 to 125	RUA
LM4050QAEM3-4.1/NOPB	Active	Production	SOT-23 (DBZ) | 3	3000 | LARGE T&R	Yes	SN	Level-1-260C-UNLIM	-40 to 125	RUA
LM4050QAEM3-5.0/NO.A	Active	Production	SOT-23 (DBZ) | 3	3000 | LARGE T&R	Yes	SN	Level-1-260C-UNLIM	-40 to 125	RVA
LM4050QAEM3-5.0/NOPB	Active	Production	SOT-23 (DBZ) | 3	3000 | LARGE T&R	Yes	SN	Level-1-260C-UNLIM	-40 to 125	RVA
LM4050QAEM3X10/NOPB	Active	Production	SOT-23 (DBZ) | 3	3000 | LARGE T&R	Yes	SN	Level-1-260C-UNLIM	-40 to 125	RYA
LM4050QAEM3X2.0/NO.A	Active	Production	SOT-23 (DBZ) | 3	3000 | LARGE T&R	Yes	SN	Level-1-260C-UNLIM	-40 to 125	RSA
LM4050QAEM3X2.0/NOPB	Active	Production	SOT-23 (DBZ) | 3	3000 | LARGE T&R	Yes	SN	Level-1-260C-UNLIM	-40 to 125	RSA
LM4050QAEM3X2.5/NO.A	Active	Production	SOT-23 (DBZ) | 3	3000 | LARGE T&R	Yes	SN	Level-1-260C-UNLIM	-40 to 125	RTA
LM4050QAEM3X2.5/NOPB	Active	Production	SOT-23 (DBZ) | 3	3000 | LARGE T&R	Yes	SN	Level-1-260C-UNLIM	-40 to 125	RTA
LM4050QAEM3X4.1/NO.A	Active	Production	SOT-23 (DBZ) | 3	3000 | LARGE T&R	Yes	SN	Level-1-260C-UNLIM	-40 to 125	RUA
LM4050QAEM3X4.1/NOPB	Active	Production	SOT-23 (DBZ) | 3	3000 | LARGE T&R	Yes	SN	Level-1-260C-UNLIM	-40 to 125	RUA
LM4050QAEM3X5.0/NO.A	Active	Production	SOT-23 (DBZ) | 3	3000 | LARGE T&R	Yes	SN	Level-1-260C-UNLIM	-40 to 125	RVA
LM4050QAEM3X5.0/NOPB	Active	Production	SOT-23 (DBZ) | 3	3000 | LARGE T&R	Yes	SN	Level-1-260C-UNLIM	-40 to 125	RVA
LM4050QAEM3X8.2/NOPB	Active	Production	SOT-23 (DBZ) | 3	3000 | LARGE T&R	Yes	SN	Level-1-260C-UNLIM	-40 to 125	RXA
LM4050QAIM3-10/NOPB	Active	Production	SOT-23 (DBZ) | 3	3000 | LARGE T&R	Yes	SN	Level-1-260C-UNLIM	-40 to 85	RYA
LM4050QAIM3-2.0/NO.A	Active	Production	SOT-23 (DBZ) | 3	3000 | LARGE T&R	Yes	SN	Level-1-260C-UNLIM	-40 to 125	RSA
LM4050QAIM3-2.0/NOPB	Active	Production	SOT-23 (DBZ) | 3	3000 | LARGE T&R	Yes	SN	Level-1-260C-UNLIM	-40 to 85	RSA
LM4050QAIM3-2.5/NO.A	Active	Production	SOT-23 (DBZ) | 3	3000 | LARGE T&R	Yes	SN	Level-1-260C-UNLIM	-40 to 125	RTA
LM4050QAIM3-2.5/NOPB	Active	Production	SOT-23 (DBZ) | 3	3000 | LARGE T&R	Yes	SN	Level-1-260C-UNLIM	-40 to 85	RTA
LM4050QAIM3-4.1/NO.A	Active	Production	SOT-23 (DBZ) | 3	3000 | LARGE T&R	Yes	SN	Level-1-260C-UNLIM	-40 to 125	RUA
LM4050QAIM3-4.1/NOPB	Active	Production	SOT-23 (DBZ) | 3	3000 | LARGE T&R	Yes	SN	Level-1-260C-UNLIM	-40 to 85	RUA
LM4050QAIM3-8.2/NOPB	Active	Production	SOT-23 (DBZ) | 3	3000 | LARGE T&R	Yes	SN	Level-1-260C-UNLIM	-40 to 85	RXA
LM4050QAIM3X4.1/NO.A	Active	Production	SOT-23 (DBZ) | 3	3000 | LARGE T&R	Yes	SN	Level-1-260C-UNLIM	-40 to 125	RUA
LM4050QAIM3X4.1/NOPB	Active	Production	SOT-23 (DBZ) | 3	3000 | LARGE T&R	Yes	SN	Level-1-260C-UNLIM	-40 to 85	RUA
LM4050QBEM3-10/NOPB	Obsolete	Production	SOT-23 (DBZ) | 3	-	-	Call TI	Call TI	-40 to 125	RYB

Orderable part number	Status (1)	Material type (2)	Package | Pins	Package qty | Carrier	RoHS (3)	Lead finish/ Ball material (4)	MSL rating/ Peak reflow (5)	Op temp (°C)	Part marking (6)
LM4050QBEM3-2.0/NO.A	Active	Production	SOT-23 (DBZ) | 3	3000 | LARGE T&R	Yes	SN	Level-1-260C-UNLIM	-40 to 125	RSB
LM4050QBEM3-2.0/NOPB	Active	Production	SOT-23 (DBZ) | 3	3000 | LARGE T&R	Yes	SN	Level-1-260C-UNLIM	-40 to 125	RSB
LM4050QBEM3-2.5/NO.A	Active	Production	SOT-23 (DBZ) | 3	3000 | LARGE T&R	Yes	SN	Level-1-260C-UNLIM	-40 to 125	RTB
LM4050QBEM3-2.5/NOPB	Active	Production	SOT-23 (DBZ) | 3	3000 | LARGE T&R	Yes	SN	Level-1-260C-UNLIM	-40 to 125	RTB
LM4050QBEM3-4.1/NO.A	Active	Production	SOT-23 (DBZ) | 3	3000 | LARGE T&R	Yes	SN	Level-1-260C-UNLIM	-40 to 125	RUB
LM4050QBEM3-4.1/NOPB	Active	Production	SOT-23 (DBZ) | 3	3000 | LARGE T&R	Yes	SN	Level-1-260C-UNLIM	-40 to 125	RUB
LM4050QBEM3-5.0/NO.A	Active	Production	SOT-23 (DBZ) | 3	3000 | LARGE T&R	Yes	SN	Level-1-260C-UNLIM	-40 to 125	RVB
LM4050QBEM3-5.0/NOPB	Active	Production	SOT-23 (DBZ) | 3	3000 | LARGE T&R	Yes	SN	Level-1-260C-UNLIM	-40 to 125	RVB
LM4050QBEM3-8.2/NOPB	Obsolete	Production	SOT-23 (DBZ) | 3	-	-	Call TI	Call TI	-40 to 125	RXB
LM4050QBEM3X10/NOPB	Active	Production	SOT-23 (DBZ) | 3	3000 | LARGE T&R	Yes	SN	Level-1-260C-UNLIM	-40 to 125	RYB
LM4050QBEM3X2.0/NO.A	Active	Production	SOT-23 (DBZ) | 3	3000 | LARGE T&R	Yes	SN	Level-1-260C-UNLIM	-40 to 125	RSB
LM4050QBEM3X2.0/NOPB	Active	Production	SOT-23 (DBZ) | 3	3000 | LARGE T&R	Yes	SN	Level-1-260C-UNLIM	-40 to 125	RSB
LM4050QBEM3X2.5/NO.A	Active	Production	SOT-23 (DBZ) | 3	3000 | LARGE T&R	Yes	SN	Level-1-260C-UNLIM	-40 to 125	RTB
LM4050QBEM3X2.5/NOPB	Active	Production	SOT-23 (DBZ) | 3	3000 | LARGE T&R	Yes	SN	Level-1-260C-UNLIM	-40 to 125	RTB
LM4050QBEM3X4.1/NO.A	Active	Production	SOT-23 (DBZ) | 3	3000 | LARGE T&R	Yes	SN	Level-1-260C-UNLIM	-40 to 125	RUB
LM4050QBEM3X4.1/NOPB	Active	Production	SOT-23 (DBZ) | 3	3000 | LARGE T&R	Yes	SN	Level-1-260C-UNLIM	-40 to 125	RUB
LM4050QBEM3X5.0/NO.A	Active	Production	SOT-23 (DBZ) | 3	3000 | LARGE T&R	Yes	SN	Level-1-260C-UNLIM	-40 to 125	RVB
LM4050QBEM3X5.0/NOPB	Active	Production	SOT-23 (DBZ) | 3	3000 | LARGE T&R	Yes	SN	Level-1-260C-UNLIM	-40 to 125	RVB
LM4050QBEM3X8.2/NOPB	Active	Production	SOT-23 (DBZ) | 3	3000 | LARGE T&R	Yes	SN	Level-1-260C-UNLIM	-40 to 125	RXB
LM4050QBIM3-10/NOPB	Active	Production	SOT-23 (DBZ) | 3	3000 | LARGE T&R	Yes	SN	Level-1-260C-UNLIM	-40 to 85	RYB
LM4050QBIM3-2.0/NO.A	Active	Production	SOT-23 (DBZ) | 3	3000 | LARGE T&R	Yes	SN	Level-1-260C-UNLIM	-40 to 125	RSB
LM4050QBIM3-2.0/NOPB	Active	Production	SOT-23 (DBZ) | 3	3000 | LARGE T&R	Yes	SN	Level-1-260C-UNLIM	-40 to 85	RSB
LM4050QBIM3-2.5/NO.A	Active	Production	SOT-23 (DBZ) | 3	3000 | LARGE T&R	Yes	SN	Level-1-260C-UNLIM	-40 to 125	RTB
LM4050QBIM3-2.5/NOPB	Active	Production	SOT-23 (DBZ) | 3	3000 | LARGE T&R	Yes	SN	Level-1-260C-UNLIM	-40 to 85	RTB
LM4050QBIM3-4.1/NO.A	Active	Production	SOT-23 (DBZ) | 3	3000 | LARGE T&R	Yes	SN	Level-1-260C-UNLIM	-40 to 125	RUB
LM4050QBIM3-4.1/NOPB	Active	Production	SOT-23 (DBZ) | 3	3000 | LARGE T&R	Yes	SN	Level-1-260C-UNLIM	-40 to 85	RUB
LM4050QBIM3-5.0/NO.A	Active	Production	SOT-23 (DBZ) | 3	3000 | LARGE T&R	Yes	SN	Level-1-260C-UNLIM	-40 to 125	RVB
LM4050QBIM3-5.0/NOPB	Active	Production	SOT-23 (DBZ) | 3	3000 | LARGE T&R	Yes	SN	Level-1-260C-UNLIM	-40 to 85	RVB
LM4050QBIM3-8.2/NOPB	Active	Production	SOT-23 (DBZ) | 3	3000 | LARGE T&R	Yes	SN	Level-1-260C-UNLIM	-40 to 85	RXB
LM4050QCEM3-10/NOPB	Obsolete	Production	SOT-23 (DBZ) | 3	-	-	Call TI	Call TI	-40 to 125	RYC
LM4050QCEM3-2.0/NO.A	Active	Production	SOT-23 (DBZ) | 3	3000 | LARGE T&R	Yes	SN	Level-1-260C-UNLIM	-40 to 125	RSC

Orderable part number	Status (1)	Material type (2)	Package | Pins	Package qty | Carrier	RoHS (3)	Lead finish/ Ball material (4)	MSL rating/ Peak reflow (5)	Op temp (°C)	Part marking (6)
LM4050QCEM3-2.0/NOPB	Active	Production	SOT-23 (DBZ) | 3	3000 | LARGE T&R	Yes	SN	Level-1-260C-UNLIM	-40 to 125	RSC
LM4050QCEM3-2.5/NO.A	Active	Production	SOT-23 (DBZ) | 3	3000 | LARGE T&R	Yes	SN	Level-1-260C-UNLIM	-40 to 125	RTC
LM4050QCEM3-2.5/NOPB	Active	Production	SOT-23 (DBZ) | 3	3000 | LARGE T&R	Yes	SN	Level-1-260C-UNLIM	-40 to 125	RTC
LM4050QCEM3-4.1/NO.A	Active	Production	SOT-23 (DBZ) | 3	3000 | LARGE T&R	Yes	SN	Level-1-260C-UNLIM	-40 to 125	RUC
LM4050QCEM3-4.1/NOPB	Active	Production	SOT-23 (DBZ) | 3	3000 | LARGE T&R	Yes	SN	Level-1-260C-UNLIM	-40 to 125	RUC
LM4050QCEM3-5.0/NO.A	Active	Production	SOT-23 (DBZ) | 3	3000 | LARGE T&R	Yes	SN	Level-1-260C-UNLIM	-40 to 125	RVC
LM4050QCEM3-5.0/NO.B	Active	Production	SOT-23 (DBZ) | 3	3000 | LARGE T&R	Yes	SN	Level-1-260C-UNLIM	-40 to 125	RVC
LM4050QCEM3-5.0/NOPB	Active	Production	SOT-23 (DBZ) | 3	3000 | LARGE T&R	Yes	SN	Level-1-260C-UNLIM	-40 to 125	RVC
LM4050QCEM3-8.2/NOPB	Obsolete	Production	SOT-23 (DBZ) | 3	-	-	Call TI	Call TI	-40 to 125	RXC
LM4050QCEM3X10/NOPB	Active	Production	SOT-23 (DBZ) | 3	3000 | LARGE T&R	Yes	SN	Level-1-260C-UNLIM	-40 to 125	RYC
LM4050QCEM3X2.0/NO.A	Active	Production	SOT-23 (DBZ) | 3	3000 | LARGE T&R	Yes	SN	Level-1-260C-UNLIM	-40 to 125	RSC
LM4050QCEM3X2.0/NOPB	Active	Production	SOT-23 (DBZ) | 3	3000 | LARGE T&R	Yes	SN	Level-1-260C-UNLIM	-40 to 125	RSC
LM4050QCEM3X2.5/NO.A	Active	Production	SOT-23 (DBZ) | 3	3000 | LARGE T&R	Yes	SN	Level-1-260C-UNLIM	-40 to 125	RTC
LM4050QCEM3X2.5/NOPB	Active	Production	SOT-23 (DBZ) | 3	3000 | LARGE T&R	Yes	SN	Level-1-260C-UNLIM	-40 to 125	RTC
LM4050QCEM3X4.1/NO.A	Active	Production	SOT-23 (DBZ) | 3	3000 | LARGE T&R	Yes	SN	Level-1-260C-UNLIM	-40 to 125	RUC
LM4050QCEM3X4.1/NOPB	Active	Production	SOT-23 (DBZ) | 3	3000 | LARGE T&R	Yes	SN	Level-1-260C-UNLIM	-40 to 125	RUC
LM4050QCEM3X5.0/NO.A	Active	Production	SOT-23 (DBZ) | 3	3000 | LARGE T&R	Yes	SN	Level-1-260C-UNLIM	-40 to 125	RVC
LM4050QCEM3X5.0/NOPB	Active	Production	SOT-23 (DBZ) | 3	3000 | LARGE T&R	Yes	SN	Level-1-260C-UNLIM	-40 to 125	RVC
LM4050QCEM3X8.2/NOPB	Active	Production	SOT-23 (DBZ) | 3	3000 | LARGE T&R	Yes	SN	Level-1-260C-UNLIM	-40 to 125	RXC
LM4050QCIM3-2.0/NO.A	Active	Production	SOT-23 (DBZ) | 3	3000 | LARGE T&R	Yes	SN	Level-1-260C-UNLIM	-40 to 125	RSC
LM4050QCIM3-2.0/NO.B	Active	Production	SOT-23 (DBZ) | 3	3000 | LARGE T&R	Yes	SN	Level-1-260C-UNLIM	-40 to 125	RSC
LM4050QCIM3-2.0/NOPB	Active	Production	SOT-23 (DBZ) | 3	3000 | LARGE T&R	Yes	SN	Level-1-260C-UNLIM	-40 to 85	RSC
LM4050QCIM3-4.1/NO.A	Active	Production	SOT-23 (DBZ) | 3	3000 | LARGE T&R	Yes	SN	Level-1-260C-UNLIM	-40 to 125	RUC
LM4050QCIM3-4.1/NOPB	Active	Production	SOT-23 (DBZ) | 3	3000 | LARGE T&R	Yes	SN	Level-1-260C-UNLIM	-40 to 85	RUC
LM4050QCIM3-5.0/NO.A	Active	Production	SOT-23 (DBZ) | 3	3000 | LARGE T&R	Yes	SN	Level-1-260C-UNLIM	-40 to 125	RVC
LM4050QCIM3-5.0/NOPB	Active	Production	SOT-23 (DBZ) | 3	3000 | LARGE T&R	Yes	SN	Level-1-260C-UNLIM	-40 to 85	RVC

(1) **Status:** For more details on status, see our product life cycle.

(2) **Material type:** When designated, preproduction parts are prototypes/experimental devices, and are not yet approved or released for full production. Testing and final process, including without limitation quality assurance, reliability performance testing, and/or process qualification, may not yet be complete, and this item is subject to further changes or possible discontinuation. If available for ordering, purchases will be subject to an additional waiver at checkout, and are intended for early internal evaluation purposes only. These items are sold without warranties of any kind.

(3) **RoHS values:** Yes, No, RoHS Exempt. See the TI RoHS Statement for additional information and value definition.

(4) **Lead finish/Ball material:** Parts may have multiple material finish options. Finish options are separated by a vertical ruled line. Lead finish/Ball material values may wrap to two lines if the finish value exceeds the maximum column width.

(5) **MSL rating/Peak reflow:** The moisture sensitivity level ratings and peak solder (reflow) temperatures. In the event that a part has multiple moisture sensitivity ratings, only the lowest level per JEDEC standards is shown. Refer to the shipping label for the actual reflow temperature that will be used to mount the part to the printed circuit board.

(6) **Part marking:** There may be an additional marking, which relates to the logo, the lot trace code information, or the environmental category of the part.

Multiple part markings will be inside parentheses. Only one part marking contained in parentheses and separated by a "~" will appear on a part. If a line is indented then it is a continuation of the previous line and the two combined represent the entire part marking for that device.

Important Information and Disclaimer: The information provided on this page represents TI's knowledge and belief as of the date that it is provided. TI bases its knowledge and belief on information provided by third parties, and makes no representation or warranty as to the accuracy of such information. Efforts are underway to better integrate information from third parties. TI has taken and continues to take reasonable steps to provide representative and accurate information but may not have conducted destructive testing or chemical analysis on incoming materials and chemicals. TI and TI suppliers consider certain information to be proprietary, and thus CAS numbers and other limited information may not be available for release.

In no event shall TI's liability arising out of such information exceed the total purchase price of the TI part(s) at issue in this document sold by TI to Customer on an annual basis.

OTHER QUALIFIED VERSIONS OF LM4050-N, LM4050-N-Q1 :

- Catalog : LM4050-N
- Automotive : LM4050-N-Q1

NOTE: Qualified Version Definitions:

- Catalog - TI's standard catalog product
- Automotive - Q100 devices qualified for high-reliability automotive applications targeting zero defects

TAPE AND REEL INFORMATION

REEL DIMENSIONS

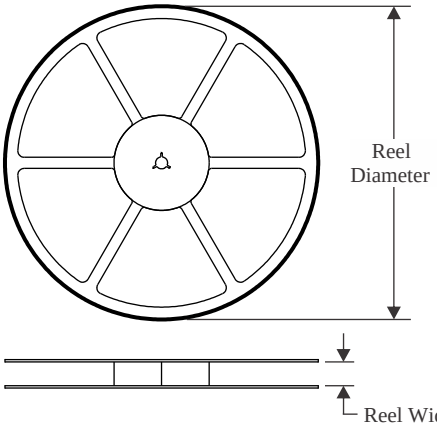

TAPE DIMENSIONS

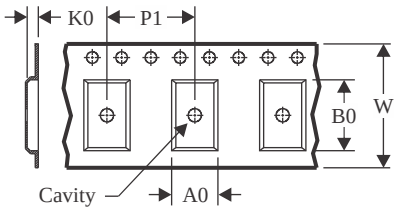

A0	Dimension designed to accommodate the component width
B0	Dimension designed to accommodate the component length
K0	Dimension designed to accommodate the component thickness
W	Overall width of the carrier tape
P1	Pitch between successive cavity centers

QUADRANT ASSIGNMENTS FOR PIN 1 ORIENTATION IN TAPE

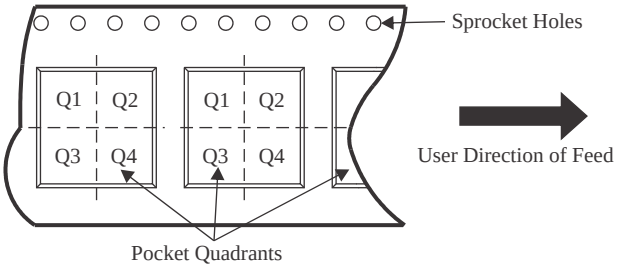

*All dimensions are nominal

Device	Package Type	Package Drawing	Pins	SPQ	Reel Diameter (mm)	Reel Width W1 (mm)	A0 (mm)	B0 (mm)	K0 (mm)	P1 (mm)	W (mm)	Pin1 Quadrant
LM4050AEM3-10/NOPB	SOT-23	DBZ	3	3000	178.0	8.4	3.3	2.9	1.22	4.0	8.0	Q3
LM4050AEM3-2.0/NOPB	SOT-23	DBZ	3	3000	180.0	8.4	3.2	2.85	1.3	4.0	8.0	Q3
LM4050AEM3-2.0/NOPB	SOT-23	DBZ	3	3000	178.0	8.4	3.3	2.9	1.22	4.0	8.0	Q3
LM4050AEM3-2.5/NOPB	SOT-23	DBZ	3	3000	180.0	8.4	3.2	2.85	1.3	4.0	8.0	Q3
LM4050AEM3-2.5/NOPB	SOT-23	DBZ	3	3000	178.0	8.4	3.3	2.9	1.22	4.0	8.0	Q3
LM4050AEM3-5.0/NOPB	SOT-23	DBZ	3	3000	178.0	8.4	3.3	2.9	1.22	4.0	8.0	Q3
LM4050AEM3-5.0/NOPB	SOT-23	DBZ	3	3000	180.0	8.4	3.2	2.85	1.3	4.0	8.0	Q3
LM4050AEM3-8.2/NOPB	SOT-23	DBZ	3	3000	180.0	8.4	3.2	2.85	1.3	4.0	8.0	Q3
LM4050AEM3-8.2/NOPB	SOT-23	DBZ	3	3000	178.0	8.4	3.3	2.9	1.22	4.0	8.0	Q3
LM4050AEM3X-10/NOPB	SOT-23	DBZ	3	3000	180.0	8.4	3.2	2.85	1.3	4.0	8.0	Q3
LM4050AEM3X-10/NOPB	SOT-23	DBZ	3	3000	178.0	8.4	3.3	2.9	1.22	4.0	8.0	Q3
LM4050AEM3X-2.5/NOPB	SOT-23	DBZ	3	3000	178.0	8.4	3.3	2.9	1.22	4.0	8.0	Q3
LM4050AEM3X-2.5/NOPB	SOT-23	DBZ	3	3000	180.0	8.4	3.2	2.85	1.3	4.0	8.0	Q3
LM4050AEM3X-5.0/NOPB	SOT-23	DBZ	3	3000	178.0	8.4	3.3	2.9	1.22	4.0	8.0	Q3
LM4050AEM3X-5.0/NOPB	SOT-23	DBZ	3	3000	180.0	8.4	3.2	2.85	1.3	4.0	8.0	Q3
LM4050AIM3-10/NOPB	SOT-23	DBZ	3	3000	180.0	8.4	3.2	2.85	1.3	4.0	8.0	Q3

Device	Package Type	Package Drawing	Pins	SPQ	Reel Diameter (mm)	Reel Width W1 (mm)	A0 (mm)	B0 (mm)	K0 (mm)	P1 (mm)	W (mm)	Pin1 Quadrant
LM4050AIM3-10/NOPB	SOT-23	DBZ	3	3000	178.0	8.4	3.3	2.9	1.22	4.0	8.0	Q3
LM4050AIM3-2.5/NOPB	SOT-23	DBZ	3	3000	178.0	8.4	3.3	2.9	1.22	4.0	8.0	Q3
LM4050AIM3-2.5/NOPB	SOT-23	DBZ	3	3000	180.0	8.4	3.2	2.85	1.3	4.0	8.0	Q3
LM4050AIM3-4.1/NOPB	SOT-23	DBZ	3	3000	180.0	8.4	3.2	2.85	1.3	4.0	8.0	Q3
LM4050AIM3-4.1/NOPB	SOT-23	DBZ	3	3000	178.0	8.4	3.3	2.9	1.22	4.0	8.0	Q3
LM4050AIM3-5.0/NOPB	SOT-23	DBZ	3	3000	180.0	8.4	3.2	2.85	1.3	4.0	8.0	Q3
LM4050AIM3-5.0/NOPB	SOT-23	DBZ	3	3000	178.0	8.4	3.3	2.9	1.22	4.0	8.0	Q3
LM4050AIM3X-2.5/NOPB	SOT-23	DBZ	3	3000	178.0	8.4	3.3	2.9	1.22	4.0	8.0	Q3
LM4050AIM3X-2.5/NOPB	SOT-23	DBZ	3	3000	180.0	8.4	3.2	2.85	1.3	4.0	8.0	Q3
LM4050AIM3X-4.1/NOPB	SOT-23	DBZ	3	3000	178.0	8.4	3.3	2.9	1.22	4.0	8.0	Q3
LM4050AIM3X-4.1/NOPB	SOT-23	DBZ	3	3000	180.0	8.4	3.2	2.85	1.3	4.0	8.0	Q3
LM4050AIM3X-5.0/NOPB	SOT-23	DBZ	3	3000	180.0	8.4	3.2	2.85	1.3	4.0	8.0	Q3
LM4050AIM3X-5.0/NOPB	SOT-23	DBZ	3	3000	178.0	8.4	3.3	2.9	1.22	4.0	8.0	Q3
LM4050BEM3-10/NOPB	SOT-23	DBZ	3	3000	178.0	8.4	3.3	2.9	1.22	4.0	8.0	Q3
LM4050BEM3-10/NOPB	SOT-23	DBZ	3	3000	180.0	8.4	3.2	2.85	1.3	4.0	8.0	Q3
LM4050BEM3-2.5/NOPB	SOT-23	DBZ	3	3000	180.0	8.4	3.2	2.85	1.3	4.0	8.0	Q3
LM4050BEM3-2.5/NOPB	SOT-23	DBZ	3	3000	178.0	8.4	3.3	2.9	1.22	4.0	8.0	Q3
LM4050BEM3-4.1/NOPB	SOT-23	DBZ	3	3000	178.0	8.4	3.3	2.9	1.22	4.0	8.0	Q3
LM4050BEM3-4.1/NOPB	SOT-23	DBZ	3	3000	180.0	8.4	3.2	2.85	1.3	4.0	8.0	Q3
LM4050BEM3-5.0/NOPB	SOT-23	DBZ	3	3000	178.0	8.4	3.3	2.9	1.22	4.0	8.0	Q3
LM4050BEM3-5.0/NOPB	SOT-23	DBZ	3	3000	180.0	8.4	3.2	2.85	1.3	4.0	8.0	Q3
LM4050BEM3-8.2/NOPB	SOT-23	DBZ	3	3000	178.0	8.4	3.3	2.9	1.22	4.0	8.0	Q3
LM4050BEM3X-10/NOPB	SOT-23	DBZ	3	3000	178.0	8.4	3.3	2.9	1.22	4.0	8.0	Q3
LM4050BEM3X-10/NOPB	SOT-23	DBZ	3	3000	180.0	8.4	3.2	2.85	1.3	4.0	8.0	Q3
LM4050BEM3X-2.5/NOPB	SOT-23	DBZ	3	3000	178.0	8.4	3.3	2.9	1.22	4.0	8.0	Q3
LM4050BEM3X-2.5/NOPB	SOT-23	DBZ	3	3000	180.0	8.4	3.2	2.85	1.3	4.0	8.0	Q3
LM4050BEM3X-5.0/NOPB	SOT-23	DBZ	3	3000	180.0	8.4	3.2	2.85	1.3	4.0	8.0	Q3
LM4050BEM3X-5.0/NOPB	SOT-23	DBZ	3	3000	178.0	8.4	3.3	2.9	1.22	4.0	8.0	Q3
LM4050BIM3-10/NOPB	SOT-23	DBZ	3	1000	178.0	8.4	3.3	2.9	1.22	4.0	8.0	Q3
LM4050BIM3-2.5/NOPB	SOT-23	DBZ	3	3000	180.0	8.4	3.2	2.85	1.3	4.0	8.0	Q3
LM4050BIM3-2.5/NOPB	SOT-23	DBZ	3	3000	178.0	8.4	3.3	2.9	1.22	4.0	8.0	Q3
LM4050BIM3-4.1/NOPB	SOT-23	DBZ	3	3000	180.0	8.4	3.2	2.85	1.3	4.0	8.0	Q3
LM4050BIM3-4.1/NOPB	SOT-23	DBZ	3	3000	178.0	8.4	3.3	2.9	1.22	4.0	8.0	Q3
LM4050BIM3-5.0/NOPB	SOT-23	DBZ	3	3000	178.0	8.4	3.3	2.9	1.22	4.0	8.0	Q3
LM4050BIM3-5.0/NOPB	SOT-23	DBZ	3	3000	180.0	8.4	3.2	2.85	1.3	4.0	8.0	Q3
LM4050BIM3X-2.0/NOPB	SOT-23	DBZ	3	3000	180.0	8.4	3.2	2.85	1.3	4.0	8.0	Q3
LM4050BIM3X-2.0/NOPB	SOT-23	DBZ	3	3000	178.0	8.4	3.3	2.9	1.22	4.0	8.0	Q3
LM4050BIM3X-2.5/NOPB	SOT-23	DBZ	3	3000	178.0	8.4	3.3	2.9	1.22	4.0	8.0	Q3
LM4050BIM3X-2.5/NOPB	SOT-23	DBZ	3	3000	180.0	8.4	3.2	2.85	1.3	4.0	8.0	Q3
LM4050BIM3X-4.1/NOPB	SOT-23	DBZ	3	3000	180.0	8.4	3.2	2.85	1.3	4.0	8.0	Q3
LM4050BIM3X-4.1/NOPB	SOT-23	DBZ	3	3000	178.0	8.4	3.3	2.9	1.22	4.0	8.0	Q3

Device	Package Type	Package Drawing	Pins	SPQ	Reel Diameter (mm)	Reel Width W1 (mm)	A0 (mm)	B0 (mm)	K0 (mm)	P1 (mm)	W (mm)	Pin1 Quadrant
LM4050BIM3X-5.0/NOPB	SOT-23	DBZ	3	3000	178.0	8.4	3.3	2.9	1.22	4.0	8.0	Q3
LM4050BIM3X-5.0/NOPB	SOT-23	DBZ	3	3000	180.0	8.4	3.2	2.85	1.3	4.0	8.0	Q3
LM4050CEM3-10/NOPB	SOT-23	DBZ	3	1000	178.0	8.4	3.3	2.9	1.22	4.0	8.0	Q3
LM4050CEM3-2.5/NOPB	SOT-23	DBZ	3	3000	180.0	8.4	3.2	2.85	1.3	4.0	8.0	Q3
LM4050CEM3-2.5/NOPB	SOT-23	DBZ	3	3000	178.0	8.4	3.3	2.9	1.22	4.0	8.0	Q3
LM4050CEM3-5.0/NOPB	SOT-23	DBZ	3	3000	178.0	8.4	3.3	2.9	1.22	4.0	8.0	Q3
LM4050CEM3-5.0/NOPB	SOT-23	DBZ	3	3000	180.0	8.4	3.2	2.85	1.3	4.0	8.0	Q3
LM4050CEM3X-2.5/NOPB	SOT-23	DBZ	3	3000	178.0	8.4	3.3	2.9	1.22	4.0	8.0	Q3
LM4050CEM3X-2.5/NOPB	SOT-23	DBZ	3	3000	180.0	8.4	3.2	2.85	1.3	4.0	8.0	Q3
LM4050CEM3X-5.0/NOPB	SOT-23	DBZ	3	3000	180.0	8.4	3.2	2.85	1.3	4.0	8.0	Q3
LM4050CEM3X-5.0/NOPB	SOT-23	DBZ	3	3000	178.0	8.4	3.3	2.9	1.22	4.0	8.0	Q3
LM4050CIM3-10/NOPB	SOT-23	DBZ	3	3000	180.0	8.4	3.2	2.85	1.3	4.0	8.0	Q3
LM4050CIM3-10/NOPB	SOT-23	DBZ	3	3000	178.0	8.4	3.3	2.9	1.22	4.0	8.0	Q3
LM4050CIM3-2.5/NOPB	SOT-23	DBZ	3	3000	178.0	8.4	3.3	2.9	1.22	4.0	8.0	Q3
LM4050CIM3-2.5/NOPB	SOT-23	DBZ	3	3000	180.0	8.4	3.2	2.85	1.3	4.0	8.0	Q3
LM4050CIM3-4.1/NOPB	SOT-23	DBZ	3	3000	180.0	8.4	3.2	2.85	1.3	4.0	8.0	Q3
LM4050CIM3-4.1/NOPB	SOT-23	DBZ	3	3000	178.0	8.4	3.3	2.9	1.22	4.0	8.0	Q3
LM4050CIM3-5.0/NOPB	SOT-23	DBZ	3	3000	180.0	8.4	3.2	2.85	1.3	4.0	8.0	Q3
LM4050CIM3-5.0/NOPB	SOT-23	DBZ	3	3000	178.0	8.4	3.3	2.9	1.22	4.0	8.0	Q3
LM4050CIM3X-2.0/NOPB	SOT-23	DBZ	3	3000	178.0	8.4	3.3	2.9	1.22	4.0	8.0	Q3
LM4050CIM3X-2.0/NOPB	SOT-23	DBZ	3	3000	180.0	8.4	3.2	2.85	1.3	4.0	8.0	Q3
LM4050CIM3X-2.5/NOPB	SOT-23	DBZ	3	3000	180.0	8.4	3.2	2.85	1.3	4.0	8.0	Q3
LM4050CIM3X-2.5/NOPB	SOT-23	DBZ	3	3000	178.0	8.4	3.3	2.9	1.22	4.0	8.0	Q3
LM4050CIM3X-4.1/NOPB	SOT-23	DBZ	3	3000	180.0	8.4	3.2	2.85	1.3	4.0	8.0	Q3
LM4050CIM3X-4.1/NOPB	SOT-23	DBZ	3	3000	178.0	8.4	3.3	2.9	1.22	4.0	8.0	Q3
LM4050CIM3X-5.0/NOPB	SOT-23	DBZ	3	3000	180.0	8.4	3.2	2.85	1.3	4.0	8.0	Q3
LM4050CIM3X-5.0/NOPB	SOT-23	DBZ	3	3000	178.0	8.4	3.3	2.9	1.22	4.0	8.0	Q3
LM4050QAEM3-2.0/ NOPB	SOT-23	DBZ	3	3000	180.0	8.4	3.2	2.85	1.3	4.0	8.0	Q3
LM4050QAEM3-2.0/ NOPB	SOT-23	DBZ	3	3000	178.0	8.4	3.3	2.9	1.22	4.0	8.0	Q3
LM4050QAEM3-2.5/ NOPB	SOT-23	DBZ	3	3000	178.0	8.4	3.3	2.9	1.22	4.0	8.0	Q3
LM4050QAEM3-2.5/ NOPB	SOT-23	DBZ	3	3000	180.0	8.4	3.2	2.85	1.3	4.0	8.0	Q3
LM4050QAEM3-4.1/ NOPB	SOT-23	DBZ	3	3000	178.0	8.4	3.3	2.9	1.22	4.0	8.0	Q3
LM4050QAEM3-4.1/ NOPB	SOT-23	DBZ	3	3000	180.0	8.4	3.2	2.85	1.3	4.0	8.0	Q3
LM4050QAEM3-5.0/ NOPB	SOT-23	DBZ	3	3000	180.0	8.4	3.2	2.85	1.3	4.0	8.0	Q3
LM4050QAEM3-5.0/ NOPB	SOT-23	DBZ	3	3000	178.0	8.4	3.3	2.9	1.22	4.0	8.0	Q3

Device	Package Type	Package Drawing	Pins	SPQ	Reel Diameter (mm)	Reel Width W1 (mm)	A0 (mm)	B0 (mm)	K0 (mm)	P1 (mm)	W (mm)	Pin1 Quadrant
LM4050QAEM3X10/ NOPB	SOT-23	DBZ	3	3000	178.0	8.4	3.3	2.9	1.22	4.0	8.0	Q3
LM4050QAEM3X2.0/ NOPB	SOT-23	DBZ	3	3000	180.0	8.4	3.2	2.85	1.3	4.0	8.0	Q3
LM4050QAEM3X2.0/ NOPB	SOT-23	DBZ	3	3000	178.0	8.4	3.3	2.9	1.22	4.0	8.0	Q3
LM4050QAEM3X2.5/ NOPB	SOT-23	DBZ	3	3000	178.0	8.4	3.3	2.9	1.22	4.0	8.0	Q3
LM4050QAEM3X2.5/ NOPB	SOT-23	DBZ	3	3000	180.0	8.4	3.2	2.85	1.3	4.0	8.0	Q3
LM4050QAEM3X4.1/ NOPB	SOT-23	DBZ	3	3000	180.0	8.4	3.2	2.85	1.3	4.0	8.0	Q3
LM4050QAEM3X4.1/ NOPB	SOT-23	DBZ	3	3000	178.0	8.4	3.3	2.9	1.22	4.0	8.0	Q3
LM4050QAEM3X5.0/ NOPB	SOT-23	DBZ	3	3000	178.0	8.4	3.3	2.9	1.22	4.0	8.0	Q3
LM4050QAEM3X5.0/ NOPB	SOT-23	DBZ	3	3000	180.0	8.4	3.2	2.85	1.3	4.0	8.0	Q3
LM4050QAEM3X8.2/ NOPB	SOT-23	DBZ	3	3000	178.0	8.4	3.3	2.9	1.22	4.0	8.0	Q3
LM4050QAIM3-10/NOPB	SOT-23	DBZ	3	3000	178.0	8.4	3.3	2.9	1.22	4.0	8.0	Q3
LM4050QAIM3-2.0/NOPB	SOT-23	DBZ	3	3000	180.0	8.4	3.2	2.85	1.3	4.0	8.0	Q3
LM4050QAIM3-2.0/NOPB	SOT-23	DBZ	3	3000	178.0	8.4	3.3	2.9	1.22	4.0	8.0	Q3
LM4050QAIM3-2.5/NOPB	SOT-23	DBZ	3	3000	180.0	8.4	3.2	2.85	1.3	4.0	8.0	Q3
LM4050QAIM3-2.5/NOPB	SOT-23	DBZ	3	3000	178.0	8.4	3.3	2.9	1.22	4.0	8.0	Q3
LM4050QAIM3-4.1/NOPB	SOT-23	DBZ	3	3000	178.0	8.4	3.3	2.9	1.22	4.0	8.0	Q3
LM4050QAIM3-4.1/NOPB	SOT-23	DBZ	3	3000	180.0	8.4	3.2	2.85	1.3	4.0	8.0	Q3
LM4050QAIM3-8.2/NOPB	SOT-23	DBZ	3	3000	178.0	8.4	3.3	2.9	1.22	4.0	8.0	Q3
LM4050QAIM3X4.1/NOPB	SOT-23	DBZ	3	3000	178.0	8.4	3.3	2.9	1.22	4.0	8.0	Q3
LM4050QAIM3X4.1/NOPB	SOT-23	DBZ	3	3000	180.0	8.4	3.2	2.85	1.3	4.0	8.0	Q3
LM4050QBEM3-2.0/ NOPB	SOT-23	DBZ	3	3000	178.0	8.4	3.3	2.9	1.22	4.0	8.0	Q3
LM4050QBEM3-2.0/ NOPB	SOT-23	DBZ	3	3000	180.0	8.4	3.2	2.85	1.3	4.0	8.0	Q3
LM4050QBEM3-2.5/ NOPB	SOT-23	DBZ	3	3000	180.0	8.4	3.2	2.85	1.3	4.0	8.0	Q3
LM4050QBEM3-2.5/ NOPB	SOT-23	DBZ	3	3000	178.0	8.4	3.3	2.9	1.22	4.0	8.0	Q3
LM4050QBEM3-4.1/ NOPB	SOT-23	DBZ	3	3000	178.0	8.4	3.3	2.9	1.22	4.0	8.0	Q3
LM4050QBEM3-4.1/ NOPB	SOT-23	DBZ	3	3000	180.0	8.4	3.2	2.85	1.3	4.0	8.0	Q3
LM4050QBEM3-5.0/ NOPB	SOT-23	DBZ	3	3000	180.0	8.4	3.2	2.85	1.3	4.0	8.0	Q3
LM4050QBEM3-5.0/ NOPB	SOT-23	DBZ	3	3000	178.0	8.4	3.3	2.9	1.22	4.0	8.0	Q3

Device	Package Type	Package Drawing	Pins	SPQ	Reel Diameter (mm)	Reel Width W1 (mm)	A0 (mm)	B0 (mm)	K0 (mm)	P1 (mm)	W (mm)	Pin1 Quadrant
LM4050QBEM3X10/ NOPB	SOT-23	DBZ	3	3000	178.0	8.4	3.3	2.9	1.22	4.0	8.0	Q3
LM4050QBEM3X2.0/ NOPB	SOT-23	DBZ	3	3000	180.0	8.4	3.2	2.85	1.3	4.0	8.0	Q3
LM4050QBEM3X2.0/ NOPB	SOT-23	DBZ	3	3000	178.0	8.4	3.3	2.9	1.22	4.0	8.0	Q3
LM4050QBEM3X2.5/ NOPB	SOT-23	DBZ	3	3000	180.0	8.4	3.2	2.85	1.3	4.0	8.0	Q3
LM4050QBEM3X2.5/ NOPB	SOT-23	DBZ	3	3000	178.0	8.4	3.3	2.9	1.22	4.0	8.0	Q3
LM4050QBEM3X4.1/ NOPB	SOT-23	DBZ	3	3000	180.0	8.4	3.2	2.85	1.3	4.0	8.0	Q3
LM4050QBEM3X4.1/ NOPB	SOT-23	DBZ	3	3000	178.0	8.4	3.3	2.9	1.22	4.0	8.0	Q3
LM4050QBEM3X5.0/ NOPB	SOT-23	DBZ	3	3000	178.0	8.4	3.3	2.9	1.22	4.0	8.0	Q3
LM4050QBEM3X5.0/ NOPB	SOT-23	DBZ	3	3000	180.0	8.4	3.2	2.85	1.3	4.0	8.0	Q3
LM4050QBEM3X8.2/ NOPB	SOT-23	DBZ	3	3000	178.0	8.4	3.3	2.9	1.22	4.0	8.0	Q3
LM4050QBIM3-10/NOPB	SOT-23	DBZ	3	3000	178.0	8.4	3.3	2.9	1.22	4.0	8.0	Q3
LM4050QBIM3-2.0/NOPB	SOT-23	DBZ	3	3000	178.0	8.4	3.3	2.9	1.22	4.0	8.0	Q3
LM4050QBIM3-2.0/NOPB	SOT-23	DBZ	3	3000	180.0	8.4	3.2	2.85	1.3	4.0	8.0	Q3
LM4050QBIM3-2.5/NOPB	SOT-23	DBZ	3	3000	180.0	8.4	3.2	2.85	1.3	4.0	8.0	Q3
LM4050QBIM3-2.5/NOPB	SOT-23	DBZ	3	3000	178.0	8.4	3.3	2.9	1.22	4.0	8.0	Q3
LM4050QBIM3-4.1/NOPB	SOT-23	DBZ	3	3000	178.0	8.4	3.3	2.9	1.22	4.0	8.0	Q3
LM4050QBIM3-4.1/NOPB	SOT-23	DBZ	3	3000	180.0	8.4	3.2	2.85	1.3	4.0	8.0	Q3
LM4050QBIM3-5.0/NOPB	SOT-23	DBZ	3	3000	180.0	8.4	3.2	2.85	1.3	4.0	8.0	Q3
LM4050QBIM3-5.0/NOPB	SOT-23	DBZ	3	3000	178.0	8.4	3.3	2.9	1.22	4.0	8.0	Q3
LM4050QBIM3-8.2/NOPB	SOT-23	DBZ	3	3000	178.0	8.4	3.3	2.9	1.22	4.0	8.0	Q3
LM4050QCEM3-2.0/ NOPB	SOT-23	DBZ	3	3000	178.0	8.4	3.3	2.9	1.22	4.0	8.0	Q3
LM4050QCEM3-2.0/ NOPB	SOT-23	DBZ	3	3000	180.0	8.4	3.2	2.85	1.3	4.0	8.0	Q3
LM4050QCEM3-2.5/ NOPB	SOT-23	DBZ	3	3000	180.0	8.4	3.2	2.85	1.3	4.0	8.0	Q3
LM4050QCEM3-2.5/ NOPB	SOT-23	DBZ	3	3000	178.0	8.4	3.3	2.9	1.22	4.0	8.0	Q3
LM4050QCEM3-4.1/ NOPB	SOT-23	DBZ	3	3000	180.0	8.4	3.2	2.85	1.3	4.0	8.0	Q3
LM4050QCEM3-4.1/ NOPB	SOT-23	DBZ	3	3000	178.0	8.4	3.3	2.9	1.22	4.0	8.0	Q3
LM4050QCEM3-5.0/ NOPB	SOT-23	DBZ	3	3000	178.0	8.4	3.3	2.9	1.22	4.0	8.0	Q3
LM4050QCEM3-5.0/ NOPB	SOT-23	DBZ	3	3000	180.0	8.4	3.2	2.85	1.3	4.0	8.0	Q3

Device	Package Type	Package Drawing	Pins	SPQ	Reel Diameter (mm)	Reel Width W1 (mm)	A0 (mm)	B0 (mm)	K0 (mm)	P1 (mm)	W (mm)	Pin1 Quadrant
LM4050QCEM3X10/ NOPB	SOT-23	DBZ	3	3000	178.0	8.4	3.3	2.9	1.22	4.0	8.0	Q3
LM4050QCEM3X2.0/ NOPB	SOT-23	DBZ	3	3000	178.0	8.4	3.3	2.9	1.22	4.0	8.0	Q3
LM4050QCEM3X2.0/ NOPB	SOT-23	DBZ	3	3000	180.0	8.4	3.2	2.85	1.3	4.0	8.0	Q3
LM4050QCEM3X2.5/ NOPB	SOT-23	DBZ	3	3000	180.0	8.4	3.2	2.85	1.3	4.0	8.0	Q3
LM4050QCEM3X2.5/ NOPB	SOT-23	DBZ	3	3000	178.0	8.4	3.3	2.9	1.22	4.0	8.0	Q3
LM4050QCEM3X4.1/ NOPB	SOT-23	DBZ	3	3000	180.0	8.4	3.2	2.85	1.3	4.0	8.0	Q3
LM4050QCEM3X4.1/ NOPB	SOT-23	DBZ	3	3000	178.0	8.4	3.3	2.9	1.22	4.0	8.0	Q3
LM4050QCEM3X5.0/ NOPB	SOT-23	DBZ	3	3000	178.0	8.4	3.3	2.9	1.22	4.0	8.0	Q3
LM4050QCEM3X5.0/ NOPB	SOT-23	DBZ	3	3000	180.0	8.4	3.2	2.85	1.3	4.0	8.0	Q3
LM4050QCEM3X8.2/ NOPB	SOT-23	DBZ	3	3000	178.0	8.4	3.3	2.9	1.22	4.0	8.0	Q3
LM4050QCIM3-2.0/NOPB	SOT-23	DBZ	3	3000	180.0	8.4	3.2	2.85	1.3	4.0	8.0	Q3
LM4050QCIM3-2.0/NOPB	SOT-23	DBZ	3	3000	178.0	8.4	3.3	2.9	1.22	4.0	8.0	Q3
LM4050QCIM3-4.1/NOPB	SOT-23	DBZ	3	3000	178.0	8.4	3.3	2.9	1.22	4.0	8.0	Q3
LM4050QCIM3-4.1/NOPB	SOT-23	DBZ	3	3000	180.0	8.4	3.2	2.85	1.3	4.0	8.0	Q3
LM4050QCIM3-5.0/NOPB	SOT-23	DBZ	3	3000	180.0	8.4	3.2	2.85	1.3	4.0	8.0	Q3
LM4050QCIM3-5.0/NOPB	SOT-23	DBZ	3	3000	178.0	8.4	3.3	2.9	1.22	4.0	8.0	Q3

TAPE AND REEL BOX DIMENSIONS

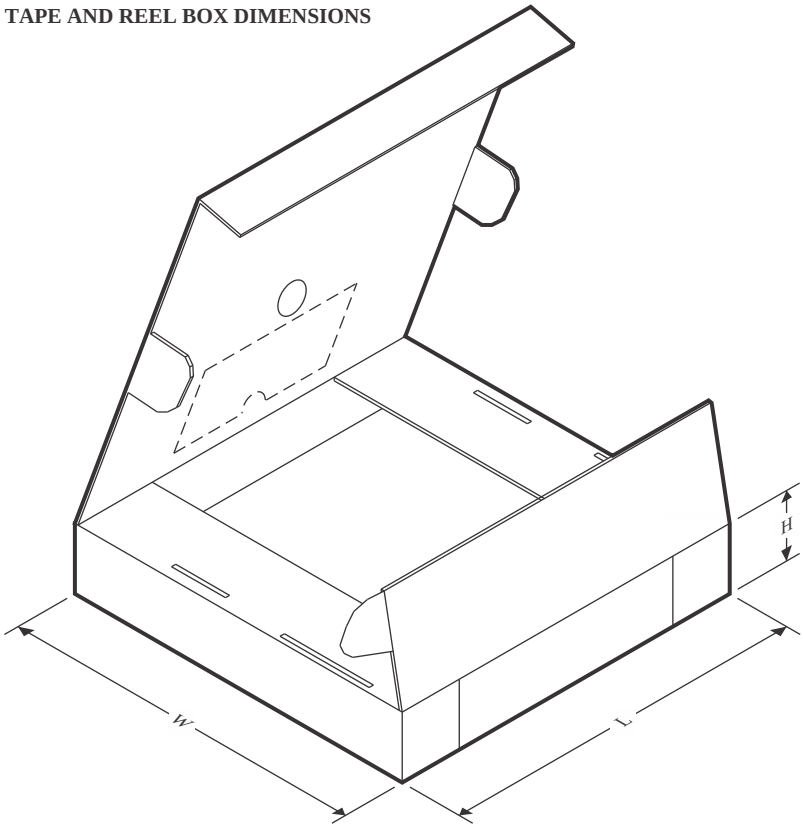

*All dimensions are nominal

Device	Package Type	Package Drawing	Pins	SPQ	Length (mm)	Width (mm)	Height (mm)
LM4050AEM3-10/NOPB	SOT-23	DBZ	3	3000	208.0	191.0	35.0
LM4050AEM3-2.0/NOPB	SOT-23	DBZ	3	3000	210.0	185.0	35.0
LM4050AEM3-2.0/NOPB	SOT-23	DBZ	3	3000	208.0	191.0	35.0
LM4050AEM3-2.5/NOPB	SOT-23	DBZ	3	3000	210.0	185.0	35.0
LM4050AEM3-2.5/NOPB	SOT-23	DBZ	3	3000	208.0	191.0	35.0
LM4050AEM3-5.0/NOPB	SOT-23	DBZ	3	3000	208.0	191.0	35.0
LM4050AEM3-5.0/NOPB	SOT-23	DBZ	3	3000	210.0	185.0	35.0
LM4050AEM3-8.2/NOPB	SOT-23	DBZ	3	3000	210.0	185.0	35.0
LM4050AEM3-8.2/NOPB	SOT-23	DBZ	3	3000	208.0	191.0	35.0
LM4050AEM3X-10/NOPB	SOT-23	DBZ	3	3000	210.0	185.0	35.0
LM4050AEM3X-10/NOPB	SOT-23	DBZ	3	3000	208.0	191.0	35.0
LM4050AEM3X-2.5/NOPB	SOT-23	DBZ	3	3000	208.0	191.0	35.0
LM4050AEM3X-2.5/NOPB	SOT-23	DBZ	3	3000	210.0	185.0	35.0
LM4050AEM3X-5.0/NOPB	SOT-23	DBZ	3	3000	208.0	191.0	35.0
LM4050AEM3X-5.0/NOPB	SOT-23	DBZ	3	3000	210.0	185.0	35.0
LM4050AIM3-10/NOPB	SOT-23	DBZ	3	3000	210.0	185.0	35.0
LM4050AIM3-10/NOPB	SOT-23	DBZ	3	3000	208.0	191.0	35.0
LM4050AIM3-2.5/NOPB	SOT-23	DBZ	3	3000	208.0	191.0	35.0

Device	Package Type	Package Drawing	Pins	SPQ	Length (mm)	Width (mm)	Height (mm)
LM4050AIM3-2.5/NOPB	SOT-23	DBZ	3	3000	210.0	185.0	35.0
LM4050AIM3-4.1/NOPB	SOT-23	DBZ	3	3000	210.0	185.0	35.0
LM4050AIM3-4.1/NOPB	SOT-23	DBZ	3	3000	208.0	191.0	35.0
LM4050AIM3-5.0/NOPB	SOT-23	DBZ	3	3000	210.0	185.0	35.0
LM4050AIM3-5.0/NOPB	SOT-23	DBZ	3	3000	208.0	191.0	35.0
LM4050AIM3X-2.5/NOPB	SOT-23	DBZ	3	3000	208.0	191.0	35.0
LM4050AIM3X-2.5/NOPB	SOT-23	DBZ	3	3000	210.0	185.0	35.0
LM4050AIM3X-4.1/NOPB	SOT-23	DBZ	3	3000	208.0	191.0	35.0
LM4050AIM3X-4.1/NOPB	SOT-23	DBZ	3	3000	210.0	185.0	35.0
LM4050AIM3X-5.0/NOPB	SOT-23	DBZ	3	3000	210.0	185.0	35.0
LM4050AIM3X-5.0/NOPB	SOT-23	DBZ	3	3000	208.0	191.0	35.0
LM4050BEM3-10/NOPB	SOT-23	DBZ	3	3000	208.0	191.0	35.0
LM4050BEM3-10/NOPB	SOT-23	DBZ	3	3000	210.0	185.0	35.0
LM4050BEM3-2.5/NOPB	SOT-23	DBZ	3	3000	210.0	185.0	35.0
LM4050BEM3-2.5/NOPB	SOT-23	DBZ	3	3000	208.0	191.0	35.0
LM4050BEM3-4.1/NOPB	SOT-23	DBZ	3	3000	208.0	191.0	35.0
LM4050BEM3-4.1/NOPB	SOT-23	DBZ	3	3000	210.0	185.0	35.0
LM4050BEM3-5.0/NOPB	SOT-23	DBZ	3	3000	208.0	191.0	35.0
LM4050BEM3-5.0/NOPB	SOT-23	DBZ	3	3000	210.0	185.0	35.0
LM4050BEM3-8.2/NOPB	SOT-23	DBZ	3	3000	208.0	191.0	35.0
LM4050BEM3X-10/NOPB	SOT-23	DBZ	3	3000	208.0	191.0	35.0
LM4050BEM3X-10/NOPB	SOT-23	DBZ	3	3000	210.0	185.0	35.0
LM4050BEM3X-2.5/NOPB	SOT-23	DBZ	3	3000	208.0	191.0	35.0
LM4050BEM3X-2.5/NOPB	SOT-23	DBZ	3	3000	210.0	185.0	35.0
LM4050BEM3X-5.0/NOPB	SOT-23	DBZ	3	3000	210.0	185.0	35.0
LM4050BEM3X-5.0/NOPB	SOT-23	DBZ	3	3000	208.0	191.0	35.0
LM4050BIM3-10/NOPB	SOT-23	DBZ	3	1000	208.0	191.0	35.0
LM4050BIM3-2.5/NOPB	SOT-23	DBZ	3	3000	210.0	185.0	35.0
LM4050BIM3-2.5/NOPB	SOT-23	DBZ	3	3000	208.0	191.0	35.0
LM4050BIM3-4.1/NOPB	SOT-23	DBZ	3	3000	210.0	185.0	35.0
LM4050BIM3-4.1/NOPB	SOT-23	DBZ	3	3000	208.0	191.0	35.0
LM4050BIM3-5.0/NOPB	SOT-23	DBZ	3	3000	208.0	191.0	35.0
LM4050BIM3-5.0/NOPB	SOT-23	DBZ	3	3000	210.0	185.0	35.0
LM4050BIM3X-2.0/NOPB	SOT-23	DBZ	3	3000	210.0	185.0	35.0
LM4050BIM3X-2.0/NOPB	SOT-23	DBZ	3	3000	208.0	191.0	35.0
LM4050BIM3X-2.5/NOPB	SOT-23	DBZ	3	3000	208.0	191.0	35.0
LM4050BIM3X-2.5/NOPB	SOT-23	DBZ	3	3000	210.0	185.0	35.0
LM4050BIM3X-4.1/NOPB	SOT-23	DBZ	3	3000	210.0	185.0	35.0
LM4050BIM3X-4.1/NOPB	SOT-23	DBZ	3	3000	208.0	191.0	35.0
LM4050BIM3X-5.0/NOPB	SOT-23	DBZ	3	3000	208.0	191.0	35.0
LM4050BIM3X-5.0/NOPB	SOT-23	DBZ	3	3000	210.0	185.0	35.0
LM4050CEM3-10/NOPB	SOT-23	DBZ	3	1000	208.0	191.0	35.0
LM4050CEM3-2.5/NOPB	SOT-23	DBZ	3	3000	210.0	185.0	35.0

Device	Package Type	Package Drawing	Pins	SPQ	Length (mm)	Width (mm)	Height (mm)
LM4050CEM3-2.5/NOPB	SOT-23	DBZ	3	3000	208.0	191.0	35.0
LM4050CEM3-5.0/NOPB	SOT-23	DBZ	3	3000	208.0	191.0	35.0
LM4050CEM3-5.0/NOPB	SOT-23	DBZ	3	3000	210.0	185.0	35.0
LM4050CEM3X-2.5/NOPB	SOT-23	DBZ	3	3000	208.0	191.0	35.0
LM4050CEM3X-2.5/NOPB	SOT-23	DBZ	3	3000	210.0	185.0	35.0
LM4050CEM3X-5.0/NOPB	SOT-23	DBZ	3	3000	210.0	185.0	35.0
LM4050CEM3X-5.0/NOPB	SOT-23	DBZ	3	3000	208.0	191.0	35.0
LM4050CIM3-10/NOPB	SOT-23	DBZ	3	3000	210.0	185.0	35.0
LM4050CIM3-10/NOPB	SOT-23	DBZ	3	3000	208.0	191.0	35.0
LM4050CIM3-2.5/NOPB	SOT-23	DBZ	3	3000	208.0	191.0	35.0
LM4050CIM3-2.5/NOPB	SOT-23	DBZ	3	3000	210.0	185.0	35.0
LM4050CIM3-4.1/NOPB	SOT-23	DBZ	3	3000	210.0	185.0	35.0
LM4050CIM3-4.1/NOPB	SOT-23	DBZ	3	3000	208.0	191.0	35.0
LM4050CIM3-5.0/NOPB	SOT-23	DBZ	3	3000	210.0	185.0	35.0
LM4050CIM3-5.0/NOPB	SOT-23	DBZ	3	3000	208.0	191.0	35.0
LM4050CIM3X-2.0/NOPB	SOT-23	DBZ	3	3000	208.0	191.0	35.0
LM4050CIM3X-2.0/NOPB	SOT-23	DBZ	3	3000	210.0	185.0	35.0
LM4050CIM3X-2.5/NOPB	SOT-23	DBZ	3	3000	210.0	185.0	35.0
LM4050CIM3X-2.5/NOPB	SOT-23	DBZ	3	3000	208.0	191.0	35.0
LM4050CIM3X-4.1/NOPB	SOT-23	DBZ	3	3000	210.0	185.0	35.0
LM4050CIM3X-4.1/NOPB	SOT-23	DBZ	3	3000	208.0	191.0	35.0
LM4050CIM3X-5.0/NOPB	SOT-23	DBZ	3	3000	210.0	185.0	35.0
LM4050CIM3X-5.0/NOPB	SOT-23	DBZ	3	3000	208.0	191.0	35.0
LM4050QAEM3-2.0/NOPB	SOT-23	DBZ	3	3000	210.0	185.0	35.0
LM4050QAEM3-2.0/NOPB	SOT-23	DBZ	3	3000	208.0	191.0	35.0
LM4050QAEM3-2.5/NOPB	SOT-23	DBZ	3	3000	208.0	191.0	35.0
LM4050QAEM3-2.5/NOPB	SOT-23	DBZ	3	3000	210.0	185.0	35.0
LM4050QAEM3-4.1/NOPB	SOT-23	DBZ	3	3000	208.0	191.0	35.0
LM4050QAEM3-4.1/NOPB	SOT-23	DBZ	3	3000	210.0	185.0	35.0
LM4050QAEM3-5.0/NOPB	SOT-23	DBZ	3	3000	210.0	185.0	35.0
LM4050QAEM3-5.0/NOPB	SOT-23	DBZ	3	3000	208.0	191.0	35.0
LM4050QAEM3X10/NOPB	SOT-23	DBZ	3	3000	208.0	191.0	35.0
LM4050QAEM3X2.0/ NOPB	SOT-23	DBZ	3	3000	210.0	185.0	35.0
LM4050QAEM3X2.0/ NOPB	SOT-23	DBZ	3	3000	208.0	191.0	35.0
LM4050QAEM3X2.5/ NOPB	SOT-23	DBZ	3	3000	208.0	191.0	35.0
LM4050QAEM3X2.5/ NOPB	SOT-23	DBZ	3	3000	210.0	185.0	35.0
LM4050QAEM3X4.1/ NOPB	SOT-23	DBZ	3	3000	210.0	185.0	35.0
LM4050QAEM3X4.1/ NOPB	SOT-23	DBZ	3	3000	208.0	191.0	35.0

Device	Package Type	Package Drawing	Pins	SPQ	Length (mm)	Width (mm)	Height (mm)
LM4050QAEM3X5.0/ NOPB	SOT-23	DBZ	3	3000	208.0	191.0	35.0
LM4050QAEM3X5.0/ NOPB	SOT-23	DBZ	3	3000	210.0	185.0	35.0
LM4050QAEM3X8.2/ NOPB	SOT-23	DBZ	3	3000	208.0	191.0	35.0
LM4050QAIM3-10/NOPB	SOT-23	DBZ	3	3000	208.0	191.0	35.0
LM4050QAIM3-2.0/NOPB	SOT-23	DBZ	3	3000	210.0	185.0	35.0
LM4050QAIM3-2.0/NOPB	SOT-23	DBZ	3	3000	208.0	191.0	35.0
LM4050QAIM3-2.5/NOPB	SOT-23	DBZ	3	3000	210.0	185.0	35.0
LM4050QAIM3-2.5/NOPB	SOT-23	DBZ	3	3000	208.0	191.0	35.0
LM4050QAIM3-4.1/NOPB	SOT-23	DBZ	3	3000	208.0	191.0	35.0
LM4050QAIM3-4.1/NOPB	SOT-23	DBZ	3	3000	210.0	185.0	35.0
LM4050QAIM3-8.2/NOPB	SOT-23	DBZ	3	3000	208.0	191.0	35.0
LM4050QAIM3X4.1/NOPB	SOT-23	DBZ	3	3000	208.0	191.0	35.0
LM4050QAIM3X4.1/NOPB	SOT-23	DBZ	3	3000	210.0	185.0	35.0
LM4050QBEM3-2.0/NOPB	SOT-23	DBZ	3	3000	208.0	191.0	35.0
LM4050QBEM3-2.0/NOPB	SOT-23	DBZ	3	3000	210.0	185.0	35.0
LM4050QBEM3-2.5/NOPB	SOT-23	DBZ	3	3000	210.0	185.0	35.0
LM4050QBEM3-2.5/NOPB	SOT-23	DBZ	3	3000	208.0	191.0	35.0
LM4050QBEM3-4.1/NOPB	SOT-23	DBZ	3	3000	208.0	191.0	35.0
LM4050QBEM3-4.1/NOPB	SOT-23	DBZ	3	3000	210.0	185.0	35.0
LM4050QBEM3-5.0/NOPB	SOT-23	DBZ	3	3000	210.0	185.0	35.0
LM4050QBEM3-5.0/NOPB	SOT-23	DBZ	3	3000	208.0	191.0	35.0
LM4050QBEM3X10/NOPB	SOT-23	DBZ	3	3000	208.0	191.0	35.0
LM4050QBEM3X2.0/ NOPB	SOT-23	DBZ	3	3000	210.0	185.0	35.0
LM4050QBEM3X2.0/ NOPB	SOT-23	DBZ	3	3000	208.0	191.0	35.0
LM4050QBEM3X2.5/ NOPB	SOT-23	DBZ	3	3000	210.0	185.0	35.0
LM4050QBEM3X2.5/ NOPB	SOT-23	DBZ	3	3000	208.0	191.0	35.0
LM4050QBEM3X4.1/ NOPB	SOT-23	DBZ	3	3000	210.0	185.0	35.0
LM4050QBEM3X4.1/ NOPB	SOT-23	DBZ	3	3000	208.0	191.0	35.0
LM4050QBEM3X5.0/ NOPB	SOT-23	DBZ	3	3000	208.0	191.0	35.0
LM4050QBEM3X5.0/ NOPB	SOT-23	DBZ	3	3000	210.0	185.0	35.0
LM4050QBEM3X8.2/ NOPB	SOT-23	DBZ	3	3000	208.0	191.0	35.0
LM4050QBIM3-10/NOPB	SOT-23	DBZ	3	3000	208.0	191.0	35.0
LM4050QBIM3-2.0/NOPB	SOT-23	DBZ	3	3000	208.0	191.0	35.0
LM4050QBIM3-2.0/NOPB	SOT-23	DBZ	3	3000	210.0	185.0	35.0

Device	Package Type	Package Drawing	Pins	SPQ	Length (mm)	Width (mm)	Height (mm)
LM4050QBIM3-2.5/NOPB	SOT-23	DBZ	3	3000	210.0	185.0	35.0
LM4050QBIM3-2.5/NOPB	SOT-23	DBZ	3	3000	208.0	191.0	35.0
LM4050QBIM3-4.1/NOPB	SOT-23	DBZ	3	3000	208.0	191.0	35.0
LM4050QBIM3-4.1/NOPB	SOT-23	DBZ	3	3000	210.0	185.0	35.0
LM4050QBIM3-5.0/NOPB	SOT-23	DBZ	3	3000	210.0	185.0	35.0
LM4050QBIM3-5.0/NOPB	SOT-23	DBZ	3	3000	208.0	191.0	35.0
LM4050QBIM3-8.2/NOPB	SOT-23	DBZ	3	3000	208.0	191.0	35.0
LM4050QCEM3-2.0/NOPB	SOT-23	DBZ	3	3000	208.0	191.0	35.0
LM4050QCEM3-2.0/NOPB	SOT-23	DBZ	3	3000	210.0	185.0	35.0
LM4050QCEM3-2.5/NOPB	SOT-23	DBZ	3	3000	210.0	185.0	35.0
LM4050QCEM3-2.5/NOPB	SOT-23	DBZ	3	3000	208.0	191.0	35.0
LM4050QCEM3-4.1/NOPB	SOT-23	DBZ	3	3000	210.0	185.0	35.0
LM4050QCEM3-4.1/NOPB	SOT-23	DBZ	3	3000	208.0	191.0	35.0
LM4050QCEM3-5.0/NOPB	SOT-23	DBZ	3	3000	208.0	191.0	35.0
LM4050QCEM3-5.0/NOPB	SOT-23	DBZ	3	3000	210.0	185.0	35.0
LM4050QCEM3X10/NOPB	SOT-23	DBZ	3	3000	208.0	191.0	35.0
LM4050QCEM3X2.0/ NOPB	SOT-23	DBZ	3	3000	208.0	191.0	35.0
LM4050QCEM3X2.0/ NOPB	SOT-23	DBZ	3	3000	210.0	185.0	35.0
LM4050QCEM3X2.5/ NOPB	SOT-23	DBZ	3	3000	210.0	185.0	35.0
LM4050QCEM3X2.5/ NOPB	SOT-23	DBZ	3	3000	208.0	191.0	35.0
LM4050QCEM3X4.1/ NOPB	SOT-23	DBZ	3	3000	210.0	185.0	35.0
LM4050QCEM3X4.1/ NOPB	SOT-23	DBZ	3	3000	208.0	191.0	35.0
LM4050QCEM3X5.0/ NOPB	SOT-23	DBZ	3	3000	208.0	191.0	35.0
LM4050QCEM3X5.0/ NOPB	SOT-23	DBZ	3	3000	210.0	185.0	35.0
LM4050QCEM3X8.2/ NOPB	SOT-23	DBZ	3	3000	208.0	191.0	35.0
LM4050QCIM3-2.0/NOPB	SOT-23	DBZ	3	3000	210.0	185.0	35.0
LM4050QCIM3-2.0/NOPB	SOT-23	DBZ	3	3000	208.0	191.0	35.0
LM4050QCIM3-4.1/NOPB	SOT-23	DBZ	3	3000	208.0	191.0	35.0
LM4050QCIM3-4.1/NOPB	SOT-23	DBZ	3	3000	210.0	185.0	35.0
LM4050QCIM3-5.0/NOPB	SOT-23	DBZ	3	3000	210.0	185.0	35.0
LM4050QCIM3-5.0/NOPB	SOT-23	DBZ	3	3000	208.0	191.0	35.0

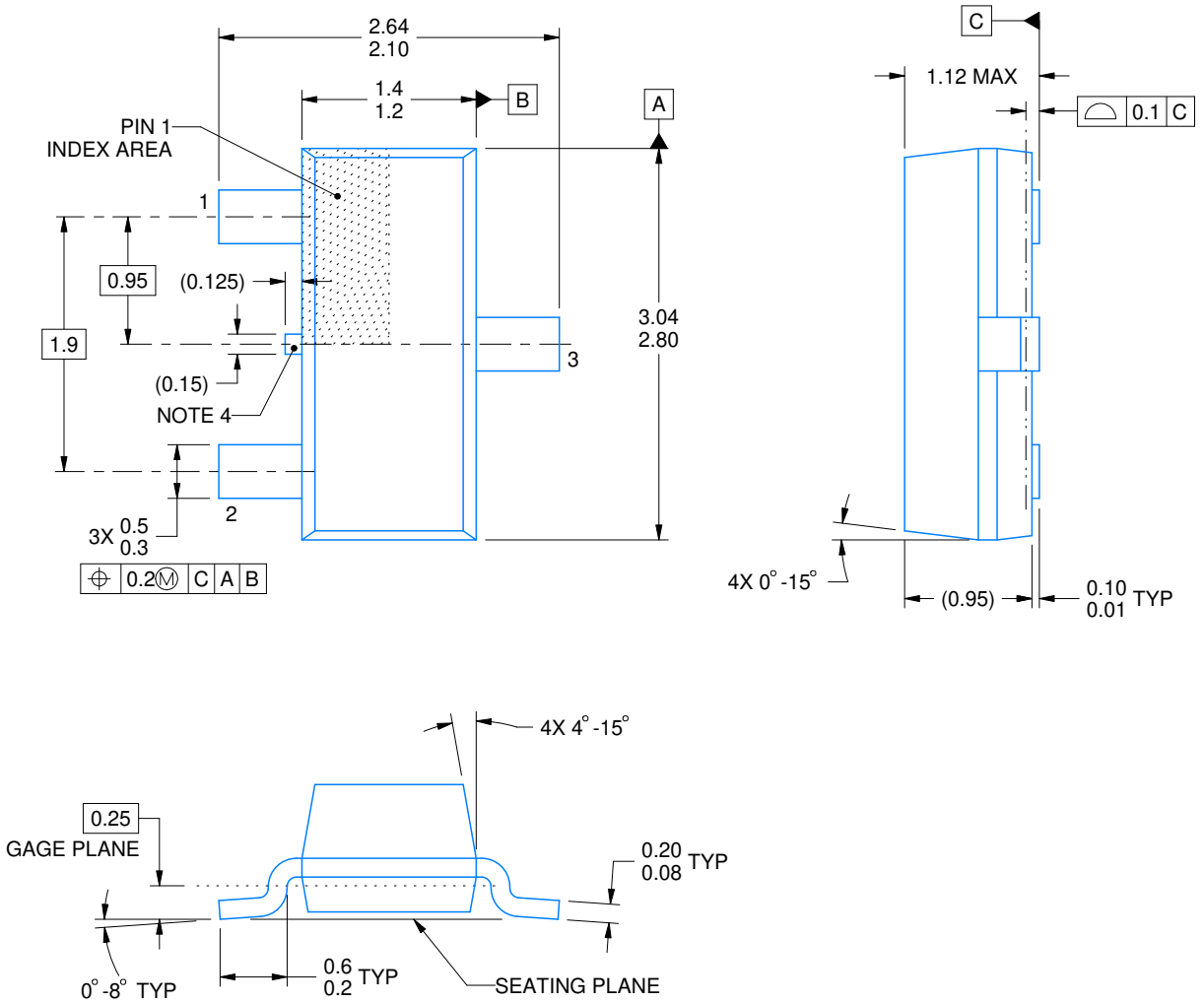

4214838/F 08/2024

NOTES:

1. All linear dimensions are in millimeters. Any dimensions in parenthesis are for reference only. Dimensioning and tolerancing per ASME Y14.5M.
2. This drawing is subject to change without notice.
3. Reference JEDEC registration TO-236, except minimum foot length.
4. Support pin may differ or may not be present.
5. Body dimensions do not include mold flash, protrusions, or gate burrs. Mold flash, protrusions, or gate burrs shall not exceed 0.25mm per side

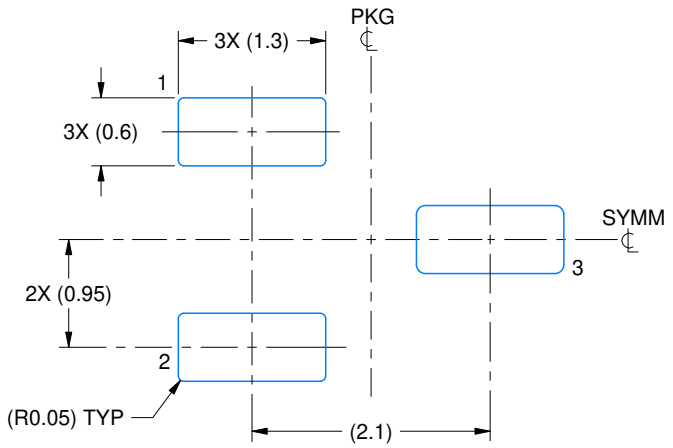

LAND PATTERN EXAMPLE
SCALE:15X

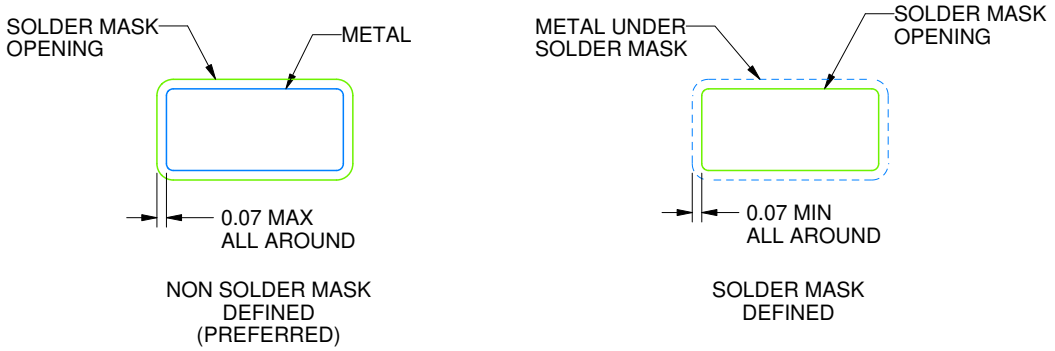

SOLDER MASK DETAILS

4214838/F 08/2024

NOTES: (continued)

5. Publication IPC-7351 may have alternate designs.
6. Solder mask tolerances between and around signal pads can vary based on board fabrication site.

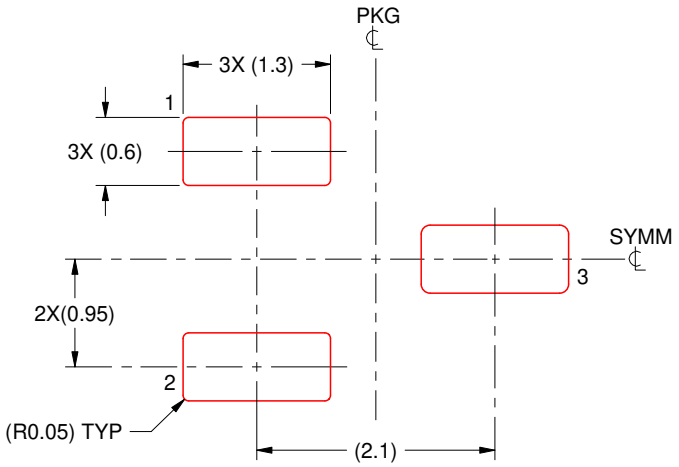

SOLDER PASTE EXAMPLE
BASED ON 0.125 THICK STENCIL
SCALE:15X

4214838/F 08/2024

NOTES: (continued)

7. Laser cutting apertures with trapezoidal walls and rounded corners may offer better paste release. IPC-7525 may have alternate design recommendations.
8. Board assembly site may have different recommendations for stencil design.

IMPORTANT NOTICE AND DISCLAIMER

TI PROVIDES TECHNICAL AND RELIABILITY DATA (INCLUDING DATASHEETS), DESIGN RESOURCES (INCLUDING REFERENCE DESIGNS), APPLICATION OR OTHER DESIGN ADVICE, WEB TOOLS, SAFETY INFORMATION, AND OTHER RESOURCES “AS IS” AND WITH ALL FAULTS, AND DISCLAIMS ALL WARRANTIES, EXPRESS AND IMPLIED, INCLUDING WITHOUT LIMITATION ANY IMPLIED WARRANTIES OF MERCHANTABILITY, FITNESS FOR A PARTICULAR PURPOSE OR NON-INFRINGEMENT OF THIRD PARTY INTELLECTUAL PROPERTY RIGHTS.

These resources are intended for skilled developers designing with TI products. You are solely responsible for (1) selecting the appropriate TI products for your application, (2) designing, validating and testing your application, and (3) ensuring your application meets applicable standards, and any other safety, security, regulatory or other requirements.

These resources are subject to change without notice. TI grants you permission to use these resources only for development of an application that uses the TI products described in the resource. Other reproduction and display of these resources is prohibited. No license is granted to any other TI intellectual property right or to any third party intellectual property right. TI disclaims responsibility for, and you fully indemnify TI and its representatives against any claims, damages, costs, losses, and liabilities arising out of your use of these resources.

TI’s products are provided subject to TI’s Terms of Sale, TI’s General Quality Guidelines, or other applicable terms available either on ti.com or provided in conjunction with such TI products. TI’s provision of these resources does not expand or otherwise alter TI’s applicable warranties or warranty disclaimers for TI products. Unless TI explicitly designates a product as custom or customer-specified, TI products are standard, catalog, general purpose devices.

TI objects to and rejects any additional or different terms you may propose.

Copyright © 2026, Texas Instruments Incorporated

Last updated 10/2025