THIS DRAWING IS UNPUBLISHED. RELEASED FOR PUBLICATION 20
© COPYRIGHT 20 BY TYCO ELECTRONICS CORPORATION. ALL RIGHTS RESERVED.

| LOC | DIST |
|---|---|
| A | 66 |

REVISIONS

| P | LTR | DESCRIPTION | DATE | DWN | APVD |
|---|---|---|---|---|---|
| | F | ECR-18-013478 | 23AUG2018 | JAH | TE |
| | G | ECR-20-013472 | 22SEP2020 | JAH | RK |
| | H | ECR-20-018175 | 29DEC2020 | TB | TE |
| | H1 | ECR-26-277191 | 21APR2026 | AP | AQ |

# ATLANTIC VERSION TERMINATOR INTERFACE ADAPTER

| PART NUMBER | REVISION | DESCRIPTION | FEED TYPE | |
|---|---|---|---|---|
| ~~2151376-1~~ | H | FINE CRIMP HEIGHT ADJUST | MECHANICAL | SUPERSEDED BY 4170027-1 |
| ~~2151376-2~~ | H | FINE CRIMP HEIGHT ADJUST | PNEUMATIC | SUPERSEDED BY 4170027-1 |
| ~~5-2151376-1~~ | H | SEAL STRIPPER CRIMPER TERMINATING UNIT | MECHANICAL | SUPERSEDED BY 4170027-1 |
| ~~5-2151376-2~~ | H | SEAL STRIPPER CRIMPER TERMINATING UNIT | PNEUMATIC | SUPERSEDED BY 4170027-1 |
| ~~7-2151376-1~~ | H | MECHANICAL AND CRIMP TOOLING KIT | MECHANICAL | OBSOLETE |
| ~~7-2151376-2~~ | H | PNEUMATIC AND CRIMP TOOLING KIT | PNEUMATIC | OBSOLETE |
| 7-2151376-7 | A | CRIMP TOOLING KIT | - | |

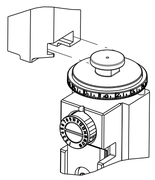

| APPLICATOR DATA | | |
|---|---|---|
| CRIMP | SIZE | TYPE |
| WIRE | 2.03 mm [.080] | F |
| INSUL | 3.05 mm [.120] | O |
| APPLICATOR INSTRUCTIONS 408-35042 | | |

| TERMINAL DATA: TE TERMINAL | | | TE CRIMP SPECIFICATION |
|---|---|---|---|
| TERMINAL NAME: CONTACT AMPSEAL | | | |
| WIRE STRIP LENGTH 4.70-5.50 mm [.185-.217 IN] | | INSULATION DIAMETER RANGE ∅1.70-2.70 mm [.067-.106 IN] | |
| TERMINAL APPLICATION SPECIFICATION | 114-16016 | - | - |
| | - | - | - |
| TERMINALS APPLIED 5 | | | |
| TE TERMINAL | TE TERMINAL | TE TERMINAL | TE TERMINAL |
| 770520-1 | 770520-2 | 770520-3 | 770520-4 |

| TERMINAL DATA: TE TERMINAL | | | TE CRIMP SPECIFICATION |
|---|---|---|---|
| TERMINAL NAME: CONTACT AMPSEAL | | | |
| WIRE STRIP LENGTH 4.70-5.50 mm [.185-.217 IN] | | INSULATION DIAMETER RANGE ∅1.70-2.70 mm [.067-.106 IN] | |
| TERMINAL APPLICATION SPECIFICATION | 6 | - | - |
| | - | - | - |
| TERMINALS APPLIED 5 | | | |
| TE TERMINAL | TE TERMINAL | TE TERMINAL | TE TERMINAL |
| 770520-1 | 770520-2 | 770520-3 | 770520-4 |

| WIRE SIZE | CRIMP HEIGHT mm [INCH] | CRIMP HEIGHT 4 REFERENCE SETTING |
|---|---|---|
| 1.50mm2 | 1.40+/-0.05 [.055+/-.002] | 5.0 |
| 16 AWG OR 1.40mm2 | 1.40+/-0.05 [.055+/-.002] | 5.0 |
| 1.00mm2 | 1.28+/-0.05 [.050+/-.002] | 6.3 |
| 18 AWG OR 0.80mm2 | 1.27+/-0.05 [.050+/-.002] | 6.5 |
| 20 AWG OR 0.50mm2 | 1.17+/-0.08 [.046+/-.003] | 7.5 |

| WIRE SIZE | CRIMP HEIGHT mm [INCH] | CRIMP HEIGHT 4 REFERENCE SETTING |
|---|---|---|
| 0.75mm2 | 1.27+/-0.05 [.050+/-.002] | 6.5 |

1. RECOMMENDED SPARE PARTS
2. REFER TO SUPPLIED INSTRUCTION SHEET FOR CLEANING, LUBRICATION AND STORAGE OF APPLICATOR.
3. APPLY PART NUMBER 2-23419-6 LOCTITE TO THREADS OF ITEM 242. APPLY PART NUMBER 1-23419-5 LOCTITE TO THREADS OF ITEM 180.
4. CRIMP HEIGHT REFERENCE SETTING WAS THE SETTING USED WHEN THE APPLICATOR WAS QUALIFIED AT THE FACTORY. ADJUSTMENT MAY BE NECESSARY WHEN RUNNING APPLICATOR IN THE FIELD.
5. TERMINAL LUBRICANT IS RECOMMENDED.
6. THIS CRIMP PARAMETER IS PROVIDED TO MEET A CUSTOM AND UNIQUE CUSTOMER REQUIREMENT. IT HAS BEEN EVALUATED AND IS CONDITIONALLY SPECIFIED BY TE CONNECTIVITY. THIS CUSTOMIZED CRIMP PARAMETER IS NOT LISTED AS AN APPROVED APPLICATION WITHIN A TE CONNECTIVITY APPLICATION SPECIFICATION; HOWEVER, IT HAS BEEN VALIDATED ACCORDING TO TE CONNECTIVITY SPECIFICATIONS 109-18079(TEST GROUP 1) AND 114-18022. **TE CONNECTIVITY EXPRESSLY DISCLAIMS ANY AND ALL WARRANTIES THAT THE PRODUCT WILL PERFORM SIMILARLY TO VALIDATED AND APPROVED APPLICATIONS, AS STATED WITHIN TE CONNECTIVITY APPLICATION SPECIFICATIONS, INCLUDING BUT NOT LIMITED TO IMPLIED WARRANTIES OF MERCHANTABILITY OR FITNESS FOR PARTICULAR PURPOSE.** AS SUCH, IT IS HIGHLY RECOMMENDED THAT THE CUSTOMER PERFORM FURTHER DETAILED EVALUATION TO ASSESS PRODUCT PERFORMANCE IN THE SPECIFIC APPLICATION.
7. UNLESS SPECIFIED OTHERWISE TORQUE VALUES SHALL BE USED PER DOCUMENT, 101-35000.

*WARNING
ON INSTALLATION, SET WIRE DISC TO CRIMP HEIGHT REFERENCE SETTING FOR LARGEST WIRE SIZE. CRIMP HEIGHT REFERENCE SETTINGS GREATER THAN THE VALUE SHOWN MAY CAUSE DAMAGE TO THE CRIMP TOOLING, REFER TO THE INSTRUCTION SHEET FOR PROPER SETUP AND ADJUSTMENTS.

| | | | | | | | | | | | | | | | ITEM NO | DESCRIPTION | PART NO |
|---|---|---|---|---|---|---|---|---|---|---|---|---|---|---|---|---|---|
| | | | OBSOLETE | OBSOLETE | SUPERSEDED BY 4170027-1 | SUPERSEDED BY 4170027-1 | SUPERSEDED BY 4170027-1 | SUPERSEDED BY 4170027-1 | | | | | | | | | |
| | - | - | - | - | - | - | - | - | | | | | | | 293 | RAM ASSEMBLY, SF ATLANTIC | 1803515-3 |
| | - | - | - | - | - | - | - | - | | | | | | | 292 | APPLICATOR BASIC ASSEMBLY, SF | 2-1803583-1 |
| | - | - | - | - | - | - | - | - | | | | | | | 248 | FEED CAM, AIR FEED | 2119641-1 |
| | - | - | - | - | - | - | - | - | | | | | | | 244 | CAM, SNAIL, INSULATION ADJUSTMENT | 2119082-9 |
| | - | - | - | - | - | - | - | - | | | | | | | 243 | WASHER, WAVE SPRING, CREST-TO-CREST | 2079764-1 |
| 3 | - | - | - | - | - | - | - | - | | | | | | | 242 | RETAINER, INSULATION DIAL | 2119083-1 |
| | - | - | - | - | - | - | - | - | | | | | | | 241 | SCR, SKT HD CAP M3 X 4.0 | 7-18023-7 |
| | - | - | - | - | - | - | - | - | | | | | | | 239 | MECHANICAL FEED ASSEMBLY | 2119580-1 |
| | - | - | - | - | - | - | - | - | | | | | | | 238 | AIR FEED MODULE | 2844940-1 |
| | - | - | - | - | - | - | - | - | | | | | | | 182 | STRIPPER, SIDE FEED | 4-1722335-3 |
| | - | - | - | - | - | - | - | - | | | | | | | 181 | NUT, HEX, REG, RoHS, M3.5 | 1-5018030-0 |
| 3 | - | - | - | - | - | - | - | - | | | | | | | 180 | STANDOFF,HOLD-DOWN | 1-1752354-9 |
| | - | - | - | - | - | - | - | - | | | | | | | 177 | PIN, SLOTTED SPRING 3.0 X 20.0 | 993111-1 |
| | - | - | - | - | - | - | - | - | | | | | | | 176 | SPRING, COMPRESSION | 5-22280-0 |
| | - | - | - | - | - | - | - | - | | | | | | | 175 | GUIDE PIN,HOLDDOWN | 1752353-3 |
| | - | - | - | - | - | - | - | - | | | | | | | 174 | GUIDE PIN,HOLDDOWN | 1901680-2 |
| | - | REF | REF | REF | REF | REF | REF | REF | | | | | | | 164 | COUNTER, MAGNETIC | 994970-2 |
| 5 | - | - | - | - | - | - | - | - | | | | | | | 113 | ASSY, LUBRICATOR, SIDE FEED | 2119955-1 |
| | - | - | - | - | - | - | - | - | | | | | | | 99 | SCREW, LOCKING | 2844908-1 |
| | - | - | - | - | - | - | - | - | | | | | | | 98 | POST, LOCKING | 2844907 |
| | - | - | - | - | - | - | - | - | | | | | | | 82 | SPACER, CRIMPER - | 455888-4 |
| | - | - | - | - | - | - | - | - | | | | | | | 71 | DOCUMENTATION PACKAGE | 1803607-3 |
| | - | - | - | - | - | - | - | - | | | | | | | 67 | TAG,IDENTIFICATION | 2119740-1 |
| | - | 2 | 2 | 2 | 2 | 2 | 2 | 2 | | | | | | | 66 | SCREW, DRIVE, RH, RoHS, 2 x .188 | 2168078-1 |
| | - | - | - | - | - | - | - | - | | | | | | | 60 | SCR, SKT HD CAP, RoHS, M4 X 8.0 | 2168083-2 |
| | - | - | - | - | - | - | - | - | | | | | | | 59 | SCR, HEX HD CAP, M4 X 6.0 | 5-18022-5 |
| | - | - | - | - | - | - | - | - | | | | | | | 56 | PAWL, FEED | 1338685-1 |
| | - | 4 | 4 | 4 | 4 | 4 | 4 | 4 | | | | | | | 54 | SCR, SKT HD CAP, RoHS, M4 X 12.0 | 2168083-3 |
| | - | 2 | 2 | 2 | 2 | 2 | 2 | 2 | | | | | | | 53 | SCR, SKT HD CAP, RoHS, M4 X 12.0 | 2168083-3 |
| | - | - | - | - | - | - | - | - | | | | | | | 50 | HOLD DOWN, SPRING LOADED | 1803382-6 |
| | - | - | 2 | - | 2 | - | 2 | 2 | | | | | | | 49 | SCR, SKT HD CAP M4 X 6.0 | 18023-9 |
| | - | - | - | - | - | - | - | - | | | | | | | 48 | FEED CAM, PRE FEED | 2119652-1 |
| | - | - | - | - | - | - | - | - | | | | | | | 47 | FEED CAM, POST FEED | 2119653-1 |
| | - | - | - | - | - | - | - | - | | | | | | | 46 | APPLICATOR BASIC ASSEMBLY, SF | 1803583-9 |
| | - | - | - | - | - | - | - | - | | | | | | | 44 | RAM ASSEMBLY, SF ATLANTIC | 1803515-1 |
| | - | - | - | - | - | - | - | - | | | | | | | 41 | SCR, BHSC, RoHS (M8 X 25) | 1803602-1 |
| | - | - | - | - | - | - | - | - | | | | | | | 34 | SUPPORT, TERMINAL | 2-1752356-0 |
| | - | 2 | 2 | 2 | 2 | 2 | 2 | 2 | | | | | | | 33 | SCR, BHSC, RoHS (M4 X 20) | 2079383-5 |
| | - | 2 | 2 | 2 | 2 | 2 | 2 | 2 | | | | | | | 30 | SPACER, CYLINDRICAL, STRIP GUIDE | 2-2844962-6 |
| | - | - | - | - | - | - | - | - | | | | | | | 29 | ASSEMBLY, STRIP GUIDE - | 2844992-1 |
| | - | - | - | - | - | - | - | - | | | | | | | 28 | SPACER, CRIMPER - | 1-455888-0 |
| | - | - | - | - | - | - | - | - | | | | | | | 24 | STRIP GUIDE - | 1320928-6 |
| | - | - | - | - | - | - | - | - | | | | | | | 21 | SCR, SKT HD CAP, RoHS, M4 X 8.0 | 2168083-2 |
| | - | 2 | 2 | - | 1 | 2 | 2 | - | | | | | | | 20 | WASHER, FLAT, REG M4 | 1-18028-2 |
| | - | - | - | - | - | - | - | - | | | | | | | 19 | STRIPPER, SIDE FEED | 2119533-1 |
| 1 | - | - | - | - | - | - | - | - | | | | | | | 13 | INSERT, SHEAR | 2119806-1 |
| | - | - | - | - | - | - | - | - | | | | | | | 12 | SPRING, COMPRESSION | 3-22280-3 |
| | - | - | - | - | - | - | - | - | | | | | | | 11 | STOP, SHEAR | 1-356885-4 |
| 1 | - | - | - | - | - | - | - | - | | | | | | | 10 | SHEAR HOLDER, FRONT - | 2119805-1 |
| 1 | - | - | - | - | - | - | - | - | | | | | | | 9 | FLOATING SHEAR, FRONT | 1803095-6 |
| 1 | 1 | 2 | 2 | - | - | - | - | - | | | | | | | 8 | ANVIL, COMBINATION | 3-1333204-2 |
| | - | - | - | - | - | - | - | - | | | | | | | 7 | SPACER | 240641-5 |
| | - | - | - | - | - | - | - | - | | | | | | | 6 | - | - |
| | - | - | - | - | - | - | - | - | | | | | | | 5 | DEPRESSOR, SHEAR | 2119757-4 |
| | - | - | - | - | - | - | - | - | | | | | | | 4 | BLOCK, CRIMPER SPACER - | 238011-4 |
| 1 | 1 | 2 | 2 | - | - | - | - | - | | | | | | | 3 | CRIMPER, INSULATION O PREMIUM | 1633965-2 |
| | - | - | - | - | - | - | - | - | | | | | | | 2 | SPACER, CRIMPER - | 455888-5 |
| 1 | 1 | 2 | 2 | - | - | - | - | - | | | | | | | 1 | CRIMPER, WIRE PREMIUM | 1-456405-3 |
| | -77 | -72 | -71 | -52 | -51 | -2 | -1 | | | | | | | | | | |

THIS DRAWING IS A CONTROLLED DOCUMENT FOR TYCO ELECTRONICS CORPORATION IT IS SUBJECT TO CHANGE AND THE CONTROLLING ENGINEERING ORGANIZATION SHOULD BE CONTACTED FOR THE LATEST REVISION.

DIMENSIONS: mm

TOLERANCES UNLESS OTHERWISE SPECIFIED:
0 PLC ±-
1 PLC ±-
2 PLC ±-
3 PLC ±-
4 PLC ±-
ANGLES ±-

MATERIAL - -
FINISH - -

DWN Y.YIN 21NOV2011
CHK G.BAILEY 21NOV2011
APVD S.XI 21NOV2011
PRODUCT SPEC -
APPLICATION SPEC -
WEIGHT -

TE Connectivity
Harrisburg, PA 17105-3608

NAME Ocean Side Feed Applicator -

| SIZE | CAGE CODE | DRAWING NO | RESTRICTED TO |
|---|---|---|---|
| A1 | 00779 | C-2151376 | - |

Customer Accessible Production Drawing | SCALE 1:2 | SHEET 1 OF 4 | REV H1

THIS DRAWING IS UNPUBLISHED. RELEASED FOR PUBLICATION 20
© COPYRIGHT 20 BY TYCO ELECTRONICS CORPORATION. ALL RIGHTS RESERVED.

| LOC | DIST |
|---|---|
| A | 66 |

REVISIONS

| P | LTR | DESCRIPTION | DATE | DWN | APVD |
|---|---|---|---|---|---|
| | - | SEE SHEET 1 | - | - | - |

# FEED TYPE

## MECHANICAL

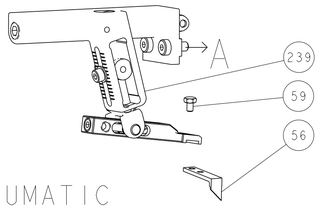


## PNEUMATIC

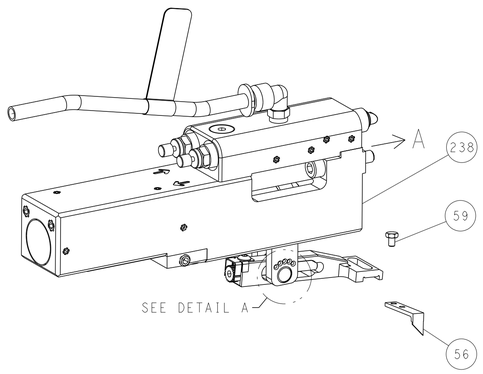


FEED SPRING SETTING POSITION
(SHOWN FROM REAR SIDE)

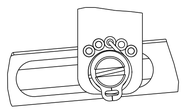

DETAIL A

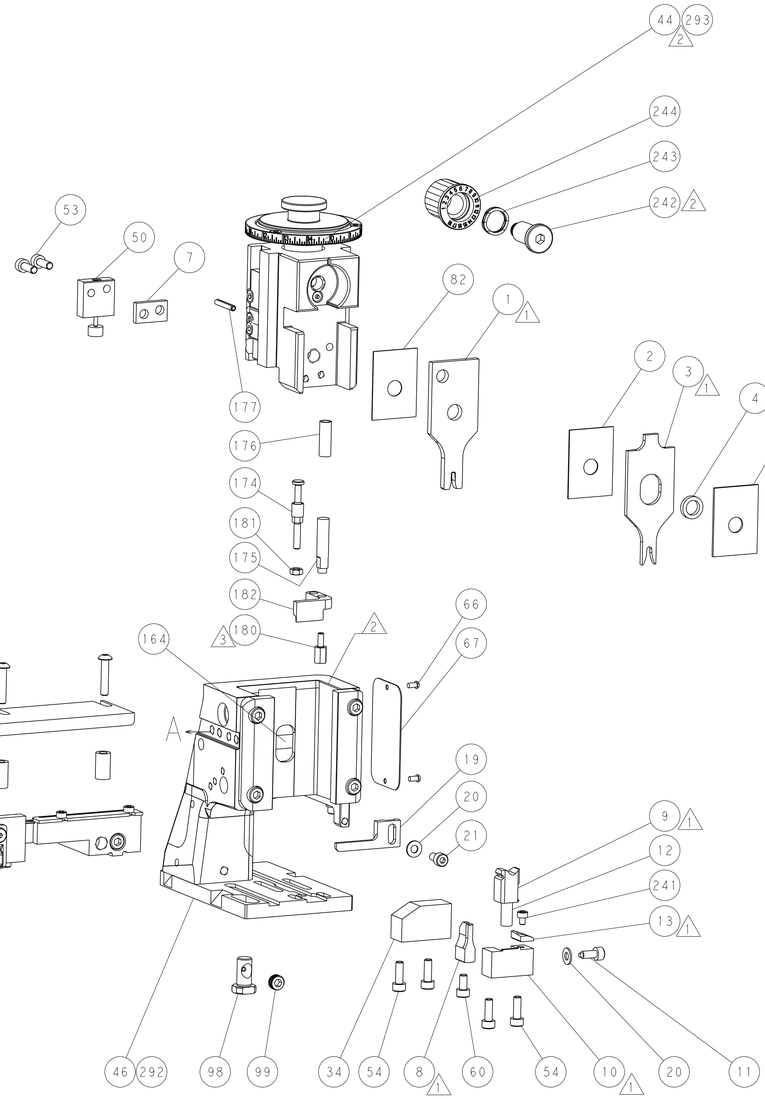


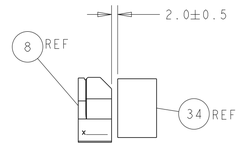


TERMINAL SUPPORT LOCATION




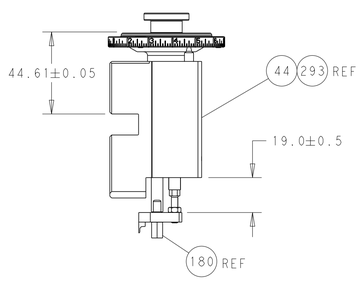


RAM AND HOLDDOWN SET-UP

ITEM 30 LOCATED AT
FRONT HOLES

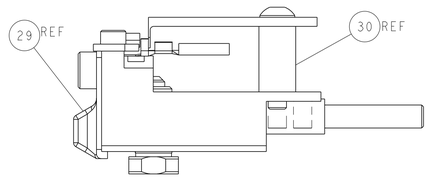


FEED TRACK POSITION
GUIDE BY INSULATION BARREL

# CAM POSITIONS

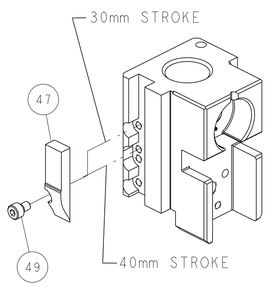


MECHANICAL
POST FEED

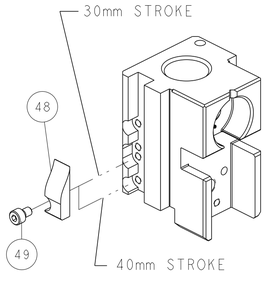


MECHANICAL
PRE FEED

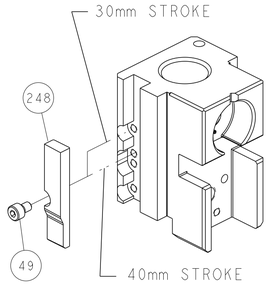


AIR FEED

THIS DRAWING IS A CONTROLLED DOCUMENT FOR TYCO ELECTRONICS CORPORATION IT IS SUBJECT TO CHANGE AND THE CONTROLLING ENGINEERING ORGANIZATION SHOULD BE CONTACTED FOR THE LATEST REVISION.

DIMENSIONS: mm
TOLERANCES UNLESS OTHERWISE SPECIFIED:
0 PLC ±
1 PLC ±
2 PLC ±
3 PLC ±
4 PLC ±
ANGLES ±
MATERIAL -
FINISH -

| | | |
|---|---|---|
| DWN | Y YIN | 21NOV2011 |
| CHK | G BAILEY | 21NOV2011 |
| APVD | S XI | 21NOV2011 |
| PRODUCT SPEC | - | |
| APPLICATION SPEC | - | |
| WEIGHT | - | |

TE Connectivity
Harrisburg, PA 17105-3608

NAME: Ocean Side Feed Applicator -

| SIZE | CAGE CODE | DRAWING NO | RESTRICTED TO |
|---|---|---|---|
| A1 | 00779 | C-2151376 | - |

Customer Accessible Production Drawing | SCALE 1:2 | SHEET 2 OF 4 | REV H1