cannon

CA Bayonet / VG95234 Connectors

ITT

ENGINEERED FOR LIFE

Proven Quality, Reliability & Expertise

ITT's Cannon brand is a leading global manufacturer of connector products serving international customers in the aerospace and defense, medical, energy, transportation and industrial end markets.

Whether delivering critical specs to aircraft pilots, streaming data through communications satellites or giving expectant parents a first look at their unborn children, Cannon connects the world's most important information to the people who need it.

In 2015, Cannon celebrated 100 years that helped make history. Cannon products were used in the first "talking" movies and helped transmit the first messages home from the moon. Today we proudly continue our legacy of innovating to connect the world and inspire the successes of the next century – **because amazing things happen when great things connect.**

About ITT

ITT is a diversified leading manufacturer of highly engineered critical components and customized technology solutions for the energy, transportation and industrial markets. Building on its heritage of innovation, ITT partners with its customers to deliver enduring solutions to the key industries that underpin our modern way of life.

Founded in 1920, ITT is headquartered in White Plains, N.Y., with employees in more than 35 countries and sales in a total of approximately 125 countries. For more information, visit www.itt.com.

Dimensions shown in mm
Specifications and dimensions subject to change

cannon

Our connector portfolio remains the most extensive in the industry.

Offering a reliable and cost effective range of interconnect solutions.

Dimensions shown in mm
Specifications and dimensions subject to change

ITT
ENGINEERED FOR LIFE

Introduction to CAB/VG95234

cannon

Cannon CA Bayonet series was designed in accordance with the VG95234 specification. This versatile and highly reliable connector series is an improvement on the well established MIL-C-5015 series. CA-Bayonet has a proven "reverse bayonet" coupling design that offers exceptional vibration protection, by a simple 120° turn.

Initially designed for aircraft and airborne applications, these rugged connectors are used in the electrical equipment of various off-road vehicles, construction machinery, industrial devices, railroad and military vehicles.

Advantages

– rugged shell design

– waterproof up to IP68, (10 meters / 35 feet or 1 bar for 16 h) and IP69k (water jet)

– environmental protection

– bayonet coupling for easy mating and unmating

– vibration proof

Cannon has the complete VG95234 program available and, in addition, many other types which exceed the requirements of VG95234 and MIL-C-5015.

Attention

Metal shell connectors which may be accessed are not suitable for mains power.

Connector Design & Features

Robust design

- Rugged aluminium shell for most severe conditions
- Bayonet coupling with rigid stainless steel roller bolts for fast and reliable mating (min. 500 cycles)
- An audible sound and a colour-marked snap-in position ensure additional coupling security

Contact arrangements & accessories

- Over 140 arrangements and 12 connector sizes available for 1 to 65 circuits
- Wide selection of end bells for individual wires & jacketed cables
- Choice of accessories e.g. seals, gaskets, dust caps, wire hole fillers

VG & commercial offering

- Connector offering according VG95234 standard – fully approved VG portfolio as required for military applications
- Extended offering of additional connector versions and endbell solutions for typical industrial applications

Contact offering

- Contacts provide at least 500 mating cycles
- Contacts available as crimp, solder or PCB versions
- Gold plated contacts available for low current applications
- Crimp and assembly tooling available for all contact sizes

Environmental protection

- Cadmium as standard, high performance plating 500h salt spray, highly conductive
- Cadmium & ChromVI free alternatives for RoHS applications
  - > ZnNi Blue grey A240 plating for 500h salt spray resistance and highly conductive
  - > ZnCo Black A232 plating, for 200h salt spray resistance, conductive
  - > ZnCo Green A233 plating, for 200h salt spray resistance and highly conductive
  - > ZnCo Black A239 plating, VG approved military plating, 48h salt spray and highly conductive
- IP67 pressure water & IP69k water jet sealing

Insulators / grommets

- Made of high quality polychloroprene for temperature range -55/125°C (-67/+257°F)
- Material is self-extinguishing
- Resistant against hydraulic fluids, jet fuel, diesel fuel, gasoline, lubricants, brake and fire extinguisher fluids

Dimensions shown in mm
Specifications and dimensions subject to change

Table of Contents

cannon

Proven Quality, Reliability & Expertise **2-3**

Introduction to CAB/VG95234 **4**

VG/CA Bayonet

Technical Data 6
Mechanical Features 7
Mounting Holes & Dimensions 8-9
How to Order 10-12
Contact Arrangements 13-26
Connector Dimensions 27-43
Coupling Dimensions 44

CAB IP69K

General Information 45
How to Order 46
Connector Dimensions 47-48

Accessories **49-61**

Tools **62-63**

Part Number Search **64-66**

Product Safety Information **67**

Dimensions shown in mm
Specifications and dimensions subject to change

Technical Data

Contact rating at 20 °C (+68 °F) acc. to VG95234

Contact size	Max. current A
10	8
16S/15S	22
16/15	22
12/25	41
8/60/100	74
4/160	135
0/500	245

Current rating

Reference values based on measurements from a single pair of contacts.

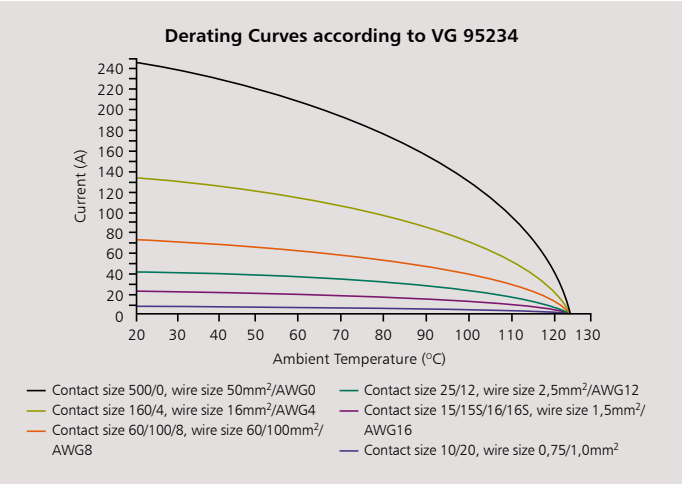

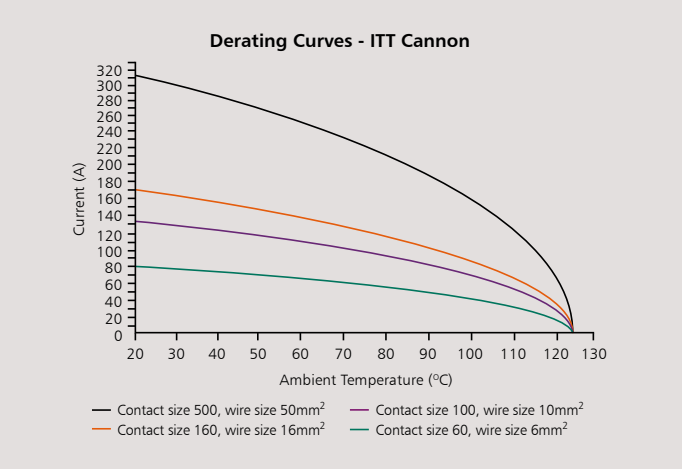

Contact resistance

(Millivolt test)

The contact resistance has to be tested according to VG95234 part 2, test no. 5.10.1 and VG 95210, part 37.

Contact size Metric	AWG	Max. contact resistance mΩ
10	–	12
15S/15	16S/16	6
25	12	3
60/100	8	1
160	4	0,5
500	0	0,2

Insulation resistance

Acc. to VG95319, part 2, test no. 5.12 and VG95210, part 32, test condition B

Standard insulator material > 1000 MΩ

FKM insulator material (upon request) > 5000 MΩ

Test voltage

Acc. to VG95319, part 2, test no. 5.13 and VG 95210, part 31
Test voltage for service rating:

Service rating	Test voltage V_{rms}
Instruments	1050
A	1600
B	4500
D	2500
E	3000

Air and creepage paths (min.)

Voltage class	Instr.	A	D	E
Air and creepage paths mm	0,7	1,1	2,8	4,8

Operating voltage and connector usage

Operating voltage for CA Bayonet / VG95234 connectors is limited to 50VAC / 75VDC according to the safety regulations defined in the European Low Voltage Directive (LVD) 2014/35/EU.

For other uses or regions please see appropriate regional regulations.

Dimensions shown in mm
Specifications and dimensions subject to change

Mechanical Features

Ambient temperature
Standard insulator material
–55°/125°C (– 67/257°F)

FKM insulator material*
–30°/200°C (– 22/392°F)

Safety provisions**
In mated condition
General (all connectors):
IP67 acc. to ISO20653

VG 95234 Connectors:
1 bar for 16h

IP69K Version Connectors:
Plug with Universal Endbell and receptacle with o-ring
IP68 (1bar for 16h); IP69K (Jet water sealed) acc. to ISO20653

Vibration test
200 m/s^2 at 10 to 2000 Hz

Mating cycles
500 min.

Withdrawal force per contact
The corresponding separating force has to be measured according to VG95319, part 2, test no. 5.7. using the required test gage and DIN EN60512-16-5.

Contact size Metric	AWG	Separating force min N	Gage
10	–	0,3	G 0,99
15S/15	16S/16	1,0	G 1,56
25	12	1,5	G 2,36
60/100	8	3,0	G 3,58
160	4	4,0	G 5,69
500	0	8,5	G 9,04

Gauge
(see also VG95234, Part 1)

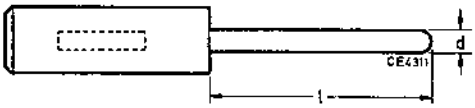

Gauge	Contact diameter d +0,01	L –1
G 0,99	0,99	7
G 1,56	1,56	9
G 2,36	2,36	12
G 3,58	3,58	13
G 5,69	5,69	13
G 9,04	9,04	13

Coupling torque
The allowable coupling torques have to be tested under full bundle conditions of the connectors to VG95319, part 2, test no. 5.8.2.

Shell Size	Allowable coupling torque closing and opening Nm max.	Opening Nm min.
10SL	1,7	0,15
12S	2,5	0,23
14S	3,6	0,35
16S/16	5,5	0,46
18	8	0,58
20	9	0,7
22	11	0,8
24	14	0,8
28	17	0,92
32	19	1,03
36	23	1,03

Contact retention
The contact retention has to be tested according to VG95319, part 2, test no. 5.4. Test force direction = Mating direction.

Contact size	AWG	Test force N
10	–	30
15S/15	16S/16	35
25	12	55
60/100	8	80
160	4	90
500	0	95

Materials
Shell - Aluminum alloy
Standard finishes

Cadmium (A66), VG approved,, 500h salt spray, highly conductive
ZnCo black (A239) RoHS, VG approved, 48h salt spray, highly conductive
ZnNi blue grey (A240) RoHS, 500h salt spray, highly conductive
ZnCo black (A232) RoHS, 200h salt spray, conductive
ZnCo green (A233) RoHS, 200h salt spray, highly conductive

Insulator and grommets
Polychloroprene (Standard)
FKM (High temperature)

Contacts - Copper alloy
Standard finish - Hard silver
Special finish - A176 nickel and hard gold plating

* consult factory for availability

** Longitudinal sealing: The connector is not sealed against fluids entering through the cable, as the sealing lips of the single wire sealing are pressing against the jacket of the individual conductors.

Only solutions as PG or ME adapters as well as universal endbell provide for longitudinal sealing provided that both ends of the cable are sealed correctly.

Dimensions shown in mm
Specifications and dimensions subject to change

ITT
ENGINEERED FOR LIFE

Mounting Holes

Mounting holes for wall mounting receptacles style A, B1, B2, C1, C2, J1, J2, N1 and N2 acc. to VG95234, or CA 3100E/F/R-B and CA 3102 E-B.

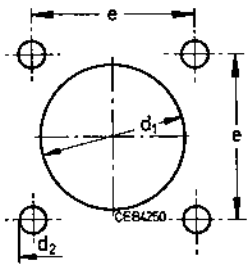

Shell size	ø d1 (H12*) Style A CA 3102E-B	Style B1, B2 C1, C2, J1, J2 N1, N2 CA 3100E, F, R-B	ø d2 (H13*) Style A, B2, C2, J2, N2 CA-B Mod-05	Style B1, C1, J1, N1 CA 3100E, F, R-B	E ±0,15	Screws to be used A, B2, C2, J2, N2 CA-B-Mod. 05	B1, C1, J1, N CA 3100E, F
10SL	16,4	18,5	3,4	4,5	18,2	M3...ISO 1580	M4...ISO 1207
12S	16,4	21,7	3,4	4,5	20,6	M3...ISO 1580	M4...ISO 1207
14S	19,7	24,9	3,4	4,5	23,0	M3...ISO 1580	M4...ISO 1207
16S	22,9	27,7	3,4	4,5	24,6	M3...ISO 1580	M4...ISO 1207
16	22,9	27,7	3,4	4,5	24,6	M3...ISO 1580	M4...ISO 1207
18	26,1	31,1	3,4	4,5	27,0	M3...ISO 1580	M4...ISO 1207
20	29,5	34,5	3,4	4,5	29,4	M3...ISO 1580	M4...ISO 1207
22	32,7	37,8	3,4	4,5	31,8	M3...ISO 1580	M4...ISO 1207
24	36,0	41,3	3,9	4,5	34,9	M3,5...ISO 1580	M4...ISO 1207
28	42,0	47,1	3,9	5,5	39,7	M3,5...ISO 1580	M5...ISO 1207
32	48,3	53,8	4,5	5,5	44,5	M4...ISO 1580	M5...ISO 1207
36	54,6	60,0	4,5	5,5	49,2	M4...ISO 1580	M5...ISO 1207

When used with safety elements the max. outer diameter must not exceed the outer diameter of the screw head.
*Drilling tolerances according to DIN ISO 286.

Harnessing

VG95234 connectors are designed for single wire harnessing. Full sealing will be guaranteed only by using wires in accordance with MIL-W-5086, LN 9251 (for AWG) and VG 95218-20 and TL 6145-011 (for metric wires). All other wires have to conform to wire and insulation diameters with the data given in the following table:

Contact size AWG	Metric mm	Crimp- and solder contacts AWG	Metric mm^2	Insulation Ø AWG	Metric mm
–	10	–	0,75-1,0	–	1,45-2,5
16S/16	15S/15	16	0,75-1,5	1,6-2,8	1,60-2,8
12	25	12	2,5	2,9-3,5	2,9-3,5
–	60	–	6,0	–	3,5-4,9
8	100	8	10,0	4,2-5,8	5,5-6,5
4	160	4	16,0	6,2-9,0	7,1-9,0
0	500	0	50,0	10,5-13,0	10,5-13,0

Wire Stripping

Either mechanical or hot stripping can be used. Prevent conductor or insulator damage. For solder contacts, conductors have to be pretinned.

Note: Do not twist conductors used with crimp contacts. Do not touch uninsulated conductors before crimping. Twisting of conductors and grease or lubricants on the wires cause poor crimp quality.

Contact size AWG	Metric	Stripping length mm
–	10	6.0 + 0,5
16S/16	15S/15	6,0 + 0,5
12	25	6,0 + 0,5
8	60/100	11,0 + 0,8 – 0,4
4	160	11,0 + 0,8 – 0,4
0	500	13,0 + 0,8 – 0,4

Dimensions shown in mm
Specifications and dimensions subject to change

Separating and Mounting Dimensions

When using connectors according to VG95234 the below mentioned installation dimensions have to be met.

Connector style D or
CA3106E-B and CA3106F-B CA3106F-B-13/-14/-15

Connector style G, M, R1 or CA3106E-B-02/-03/-06 CA3106E-B-13/-14/-15 and CA3106E-B-32 with shrink boot, straight, acc. VG95343

Connector style E, E1 and K or
CA3108E/F-B and CA3108F-B-13/-14/-15

Connector style G, M, R1or CA3106E-B-02/-03/-06 CA3106E-B-32 with shrink boot 90° acc. to VG 95343

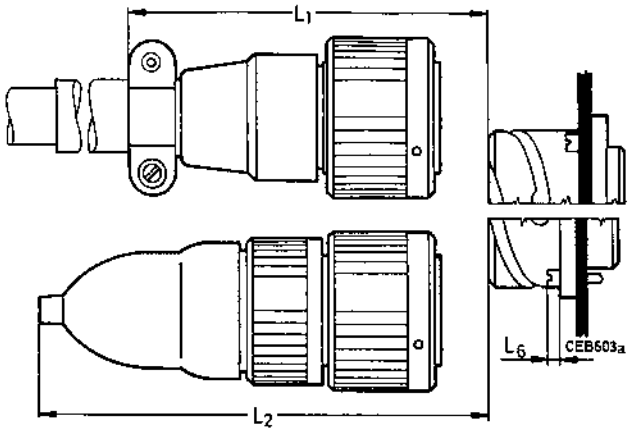

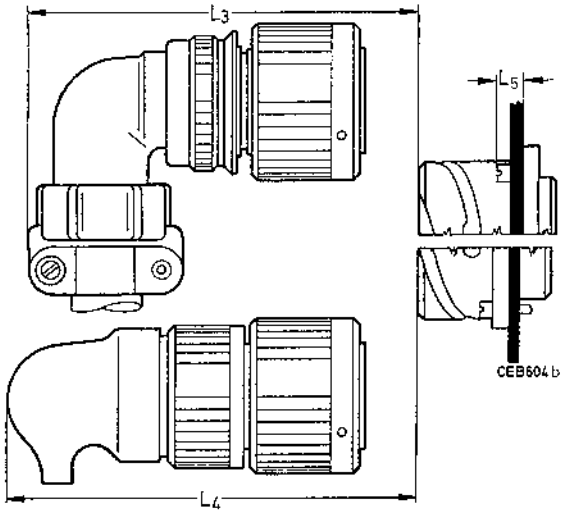

Shell size	L1 (D) min.	L2 (G/M) min.	L3 min.	L4 (G/M) min.	L4 R1 +10 mm	L5 max	L6 max
10SL	70	70	70	65	75	8,0	3,5
12S	70	75	75	70	80	8,0	3,5
14S	70	75	75	70	80	8,0	3,5
16S	70	90	80	80	90	8,0	3,5
16	80	100	90	90	100	6,5	3,5
18	90	100	90	90	100	8,0	3,5
20	90	100	95	100	110	8,0	3,5
22	90	100	95	100	110	8,0	3,5
24	110	120	105	110	120	8,0	5,0
28	110	120	105	110	120	9,0	5,0
32	110	180	115	120	130	9,0	6,0
36	110	190	120	130	140	9,0	6,0

Dimensions shown in mm
Specifications and dimensions subject to change

ITT
ENGINEERED FOR LIFE

How to order

VG Order reference

VG95234	A	–	32–6	S	1	N	1	H

- Series
- Shell style
- Dash
- Shell size
- Contact arrangement
- Contact type
- Contact termination
- Insulator position
- With / without contacts
- Plating

Explanation

Series
VG95234

Shell style
J1, J2, N1, N2, S1, U1, U2 – wall mounting receptacle
F, V – cable connection receptacle
A, B1, B2 – box mounting receptacle
C1, C2 – bulkhead receptacle
D, G, H, L, M, R1, T – straight plug
E, E1, K – plug 90°

Shell size
10SL, 14S, 16S, 16, 18, 20, 22, 24, 28, 32 and 36

Contact arrangement
See pages 13 to 26

Contact type
P – Pin contact
S – Socket contact

Contact termination
Without identification = metric crimp contacts
Identification '1' = AWG crimp contacts
Identification '2' = mixed AWG and metric crimp contacts

Insulator position
Positions N, X, Y allowed only, see details on 'contact arrangement' pages 13-23

With / without contacts
Without identification = with crimp contacts
Identification '1' = without crimp contacts, to be ordered separately

Plating
Without identification = cadmium
Identification 'H' = RoHS, black, ZnCo plating, VG approved

* 'H' is the VG plating modification identical to commercial plating A239

Important!

VG contact arrangements are restricted. Only those layouts listed in VG95234 standard are allowed. See the following pages for VG permitted layouts and contact arrangements.

Further details about contact terminations / wire ranges can be found on pages 54-59.

Accessories acc. to VG

Dummy receptacles	VG95234 BOD
Gaskets, front mount	VG95234 DA
Gaskets, rear mount	VG95234 DH
Protecting caps	VG95234 KR
Protecting caps	VG95234 KB
Cable clamps	VG95234 KK
Bushing	VG95234 KT

Dimensions shown in mm
Specifications and dimensions subject to change

How to order

Cannon Order reference

CA	3106	E	18–	1	S	X	B	–	***

Series
Shell style
Class
Shell size
Contact arrangement
Contact type
Insulator position
Connectors with bayonet coupling
Dash
Modification

Explanation

Series

CA – Circular connectors with bayonet coupling

Shell style

3100 – Wall mounting receptacle
3101 – Cable connecting receptacle
3102 – Box mounting receptacle
3105 – Dummy receptacle for front and panel mounting
3106 – Plug, straight
3108 – Plug, 90°
TBF – Bulkhead receptacle

Class

E – environmental with resilient insulators and endbell with clamp and bushing
F – environmental with resilient insulator and endbell for flex tube
R – environmental with resilient insulator and shortened light-weight endbell without cable clamp

Shell size

10SL, 12S, 14S, 16S, 16, 18, 20, 22, 24, 28, 32 and 36

Contact arrangement

See pages 13 to 26

Contact type

P – Pin
S – Socket
PS – one side pin, one side socket (only for TBF)

Insulator position

Besides the normal position further insulator positions are possible for Cannon connectors (see page 13-23) to prevent mismating. Polarization is achieved by turning the pin contact insulator clockwise towards the shell, the socket insulator, however, in opposite clockwise direction. This information refers to the mating side of the contact insulator. For special insert alternations of standard inserts see page 24.

Modification

see page 12

Dimensions shown in mm
Specifications and dimensions subject to change

ITT
ENGINEERED FOR LIFE

Modifications

(only for CA.....-B)

01 – metric crimp contacts
02 – adapter for heat shrink boots AWG crimp contacts
03 – adapter for heat shrink boots, metric crimp contacts
04 – rear mount, thread holes in flange, metric crimp contacts (CA3102 only)
05 – rear mount, through holes in flange, (CA3100, CA 3102, rear mounting CA 20, TBF)
06 – adaptor for heat shrink boots, solder pot contacts
08 – angular endbell, thread holes in flange (for CA3100 only)
09 – angular endbell, through holes in flange (for CA3100 only)
13 – shielded version, solder pot contacts
14 – shielded version, metric crimp contacts
15 – shielded version, AWG crimp contacts
32 – shielded version, reduced cable entry diameter
41 – grounding spring on barrel
109 – F80 contacts, rear mount, thread holes in flange (for CA3102 only)
111 – rear mount, thread holes in flange (CA3102 only), solder pot contacts
F80 – AWG crimp contacts
A176 – gold plated contact, see pages 54-55
A232 – Zinc cobalt black plating
A233 – Zinc cobalt green plating
A239 – Zinc cobalt black plating, VG approved
A240 – Zinc Nickel plating, blue grey plating
F42 – less grommet and backshell
F0 – less contacts, contacts to be ordered separately, see pages 54-55

Important!

VG contact arrangements are restricted. Only those layouts listed in VG95234 standard are allowed. See the following pages for VG permitted layouts and contact arrangements.

Further details about contact terminations / wire ranges can be found on pages 54-59.

With Spring Washer and Friction Ring

These connectors feature a spring washer and a friction ring under the coupling nut.

Advantage

Improved resistance to vibration

How to order

Delete "31" from standard part number and then insert "W" after Class E, F or R.

Example: CA06EW10SL-3P-B-14

The connectors acc. to VG95234 are generally delivered with spring washer.

Additional Connector Options

CA3100E-B-02/03/06
Adapter for heat shrink boot

CA3100E-B-13/14/15
Adapter for shielded cables

CA02L-B
Receptacle with PCB solder contacts

CA20L-B
Rear mount receptacle with PCB solder contacts

CA06EH*
H stands for High temperature FKM insulator and sealing material

CA07A-B
Jam nut receptacle

CA00EP-B-TL*
TINEL-LOCK adapter

CA06EW-B-TLXX*
TINEL-LOCK adapter

CA06PG/ME
PG or Metric gland adapter

*Consult factory for availability

Contact Arrangements

View on Mating face of Pin Insulator	No. of Contacts	Contact arrangement Contact size VG	CA	Service rating	Insulator position* N	V	W	X	Y	Z	Position	Special polarization	Insulator (g) including contacts Pin	Socket
	3	**10SL-3** 15S	**10SL-3** 16S	A	0	–	–	–	–	–	–	–	6	9
	2	**10SL-4** 15S	**10SL-4** 16S	A	0	–	–	–	–	–	–	–	4	6
♦	2	–	**12S-3** 16S	A	0	100	70	145	215	290	–	–	4	6
	1	–	**12S-4** 16S	D	0	–	–	–	–	–	–	–	3	4,5
	4	–	**12SA10** 16S	Instr.	0	–	–	–	–	–	3 8	110 250	6	8
	3	–	**14S-1** 16S	A	0	–	–	–	–	–	–	–	6	9
	4	–	**14S-2** 16S	Instr.	0	–	–	120	240	–	–	–	7	11
	1	–	**14S-4** 16S	D	0	–	–	–	–	–	–	–	4	7
	5	–	**14S-5** 16S	Instr.	0	–	–	110	–	–	–	–	9	13
	6	**14S-6** 15S	**14S-6** 16S	Instr.	0	–	–	–	–	–	–	–	11	15
♦	3	**14S-7** 15S	**14S-7** 16S	A	0	–	90	180	270	–		–	6	9
	2	–	**14S-9** 16S	Instr.	0	–	70	145	215	290	–	–	5	18
	7	–	**14SA7** 16S	Instr.	0	–	–	–	–	–	–	–	10	15
♦	7	**16S-1** 15S	**16S-1** 16S	A	0	–	80	–	–	280	–	–	4	19
	2	**16S-4** 15S	**16S-4** 16S	D	0	–	35	110	250	325	–	–	7	10
♦	3	–	**16S-5** 16S	A	0	–	70	145	215	290	–	–	8	12
	5	–	**16S-8** 16S	A	0	–	–	170	265	–	–	–	10	15

♦ Attention: For all insert rotations, it is possible for miss-mating to occur. It is the responsibility of the customer to ensure they have selected correctly.
* Attention: Connectors according to VG95234 are generally available with insert positions X and Y only.

Dimensions shown in mm
Specifications and dimensions subject to change

ITT
ENGINEERED FOR LIFE

View on Mating face of Pin Insulator	No. of Contacts	Contact arrangement Contact size VG	CA	Service rating	Insulator position* N	V	W	X	Y	Z	Position	Special polarization	Insulator (g) including contacts Pin	Socket
	3 2 1	**16-7** 15 100	**16-7** 16 8	A	0	–	80	110	250	280	–	–	16	25
	4 2 2	–	**16-9** 12 16	A	0	–	35	110	250	325	–	–	13	20
♦	3	**16-10** 25	**16-10** 12	A	0	–	90	180	270	–	–	–	17	24
	2	–	**16-11** 12	A	0	–	35	110	250	325	–	–	11	17
	1	**16-12** 160	**16-12** 4	A	0	–	–	–	–	–	–	–	24	28
	2	**16A11** 25 (socket) 25A (pin) short	**16A11** 12	A	0	–	35	110	250	325	–	–	11	17
♦	10	**18-1** 15	**18-1** 16	A (B, C, F, G) Instr. (all others)	0	–	70	145	215*	290	–	–	24	37
	2	–	**18-3** 12	D	0	–	35	110	250	325	–	–	13	22
	4	–	**18-4** 16	D	0	–	35	110	250	325	–	–	19	30
	3 2 1	–	**18-5** 12 16	D	0	–	80	110	250	280	–	–	15	25
	1	–	**18-6** 4	D	0	–	–	–	–	–	–	–	24	32
	1	–	**18-7** 8	D	0	–	–	–	–	–	–	–	16	25
	8 1 7	–	**18-8** 12 16	A	0	–	70	–	–	290	–	–	18	30
	7 2 5	**18-9** 25 15	**18-9** 12 16	Instr.	0	–	80	110	250	280	–	–	18	30
	4	–	**18-10** 12	A	0	–	–	120	240	–	–	–	13	22
	5	**18-11** 25	**18-11** 12	A	0	–	–	170	265	–	–	–	31	40
	6	–	**18-12** 16	A	0	–	80	–	–	280	–	–	15	25

Caution: This insulator rotation is not recommended as it can mate with normal rotation connectors.

♦ Attention: For all insert rotations, it is possible for miss-mating to occur. It is the responsibility of the customer to ensure they have selected correctly.
* Attention: Connectors according to VG95234 are generally available with insert positions X and Y only.

Dimensions shown in mm
Specifications and dimensions subject to change

View on Mating face of Pin Insulator	No. of Contacts	Contact arrangement Contact size VG	CA	Service rating	Insulator position* N	V	W	X	Y	Z	Position	Special polarization	Insulator (g) including contacts Pin	Socket
♦	4 1 3	**18-13** 60 25	**18-13** 8 12	A	0	–	80	110	250	280	–	–	15	24
	7 2 5	–	**18-17** 12 16	Instr.	0	–	–	–	–	–	12	100	15	23
	10	–	**18-19** 16	A	0	–	–	120	240	–	–	–	19	31
	5	–	**18-20** 16	A	0	–	90	180	270		–	–	15	25
	3	–	**18-21** 12	A	0	–	–	–	–	–	–	–	17	28
	3	–	**18-22** 16	D	0	–	70	145	215	290	–	–	10	20
	1	**20-2** 500	**20-2** 0	D	0	–	–	–	–	–	–	–	46	55
	3	–	**20-3** 12	D	0	–	70	145	215	290	–	–	28	42
	4	–	**20-4** 12	D	0	–	45	110	250	–	–	250 (20A37)	24	40
	3	–	**20-6** 16	D	0	–	–	–	–	–	–	–	22	36
	8	–	**20-7** 16	A (C, D, E, F) D (A, B, H, G)	0	–	80	110	250	280	–	–	28	42
	6 2 4	**20-8** 100 15	**20-8** 8 16	Instr.	0	–	80	110	250	280	–	–	37	49
	13	–	**20-11** 16	Instr.	0	–	–	–	–	–	–	–	25	41
	5 3 2	–	**20-14** 12 8	A	0	–	80	110	250	280	–	–	22	39
	7	–	**20-15** 12	A	0	–	80	–	–	280	–	–	27	46
	9 2 7	–	**20-16** 12 16	A	0	–	80	110	250	280	–	–	19	32
	6 5 1	–	**20-17** 12 16	A	0	–	90	180	270	–	–	–	20	33

♦ Attention: For all insert rotations, it is possible for miss-mating to occur. It is the responsibility of the customer to ensure they have selected correctly.
* Attention: Connectors according to VG95234 are generally available with insert positions X and Y only.

Dimensions shown in mm
Specifications and dimensions subject to change

ITT
ENGINEERED FOR LIFE

View on Mating face of Pin Insulator	No. of Contacts	Contact arrangement Contact size VG	CA	Service rating	Insulator position* N	V	W	X	Y	Z	Position	Special polarization	Insulator (g) including contacts Pin	Socket
	9 3 6	–	**20-18** 12 16	A	–	–	35	110	250	325	–	–	19	32
	3	–	**20-19** 8	A	0	–	90	180	270	–	–	–	33	46
	6 3 3	**20-22** 15 8	**20-22** 8 16	A	–	–	80	♦ 110	♦ 250	280	–	–	37	49
	2	–	**20-23** 8	A	–	–	35	110	250	325	–	–	25	35
	4 2 2	–	**20-24** 8 16	A	0	–	35	110	250	325	–	–	40	53
	14	–	**20-27** 16	A	0	–	35	110	250	325	–	–	26	42
	17	–	**20-29** 16	A	0	–	80	–	–	280	–	–	29	47
	11	–	**20-33** 16	A	0	–	–	–	–	2 3 17	260 110 130	–	23	38
	9	**20A9** 25	**20A9** 12	Instr. (all others)	0	–	–	110	250	–	–	–	21	35
	24	–	**20A24** 20	–	0	–	–	–	–	–	–	–	42	58
	19	**20A48** 15	**20A48** 16	Instr.	0	–	–	80	280	–	–	–	30	50
	2	–	**22-1** 8	D	0	–	35	110	250	325	–	–	28	42
	3	**22-2** 8	**22-2** 8	D	0	–	70	145	215	290	–	–	35	50
	4 2 2	–	**22-4** 8 12	A	–	–	5	110	250	325	–	–	34	48
	6 2 4	–	**22-5** 12 16	D	–	–	35	110	250	325	–	–	23	38
	1	–	**22-7** 0	E	0	–	–	–	–	–	–	–	45	57

♦ Attention: For all insert rotations, it is possible for miss-mating to occur. It is the responsibility of the customer to ensure they have selected correctly.
* Attention: Connectors according to VG95234 are generally available with insert positions X and Y only.

Dimensions shown in mm
Specifications and dimensions subject to change

View on Mating face of Pin Insulator	No. of Contacts	Contact arrangement Contact size VG	CA	Service rating	Insulator position* N	V	W	X	Y	Z	Position	Special polarization	Insulator (g) including contacts Pin	Socket
	2	–	**22-8** 12	E	–	–	35	110	250	325	–	–	18	28
	3	–	**22-9** 12	E	0	–	70	145	215	290	–	–	21	32
	4	–	**22-10** 16	E	–	–	35	110	250	325	–	–	17	31
	5 2 3	**22-12** 100 15	**22-12** 8 16	D	0	–	80	110	250	280	–	–	28	42
♦	19	**22-14** 15	**22-14** 16	A	0	–	80	–	–	280	–	–	30	50
	6 5 1	–	**22-15** 12 16	A (A, B, C, E, F) E (D)	0	–	80	110	250	280	–	–	30	50
	9 3	–	**22-16** 12 16	A	0	–	80	110	250	280 –	–	–	28	45
	14	–	**22-19** 16	A	0	–	80	110	250	280	–	–	28	47
	9 3 6	–	**22-20** 16	A	0	–	35	110	250	325	–	–	22	39
	3 2 1	–	**22-21** 16 0	A	0	–	80	110	250	280 –	–	–	49	58
	4	**22-22** 100	**22-22** 8	A	0	–	–	110	250	–	–	–	42	58
	8	–	**22-23** 12	D (H) A (all others)	0	–	35	–	250	–	–	–	34	54
	9 1 8	**22-27** 60 15	**22-27** 8 16	A (A to H)	0	–	80	–	250	280	–	–	21	34
	7	–	**22-28** 12	A	–	–	80	–	–	280	–	–	33	50
	4	**22B22** 60	–	A	0	–	–	110	250	–	–	–	42	58
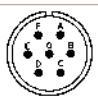	7	–	**24-2** 12	D	0	–	80	–	–	280	–	–	33	53

♦ Attention: For all insert rotations, it is possible for miss-mating to occur. It is the responsibility of the customer to ensure they have selected correctly.
* Attention: Connectors according to VG95234 are generally available with insert positions X and Y only.

Dimensions shown in mm
Specifications and dimensions subject to change

ITT
ENGINEERED FOR LIFE

View on Mating face of Pin Insulator	No. of Contacts	Contact arrangement Contact size VG	CA	Service rating	Insulator position N	V	W	X	Y	Z	Position	Special polarization	Insulator (g) including contacts Pin	Socket
	4 1 3	–	**24-4** 0 16	D	–	–	80	110	250	280	–	–	51	63
	16	–	**24-5** 16	A	–	–	80	110	250	280	–	–	30	54
	16 2 14	–	**24-7** 12 16	A	0	–	80	110	250	280	–	–	45	65
	2	**24-9** 4	**24-9** 4	A	0	–	35	110	250	325	–	–	45	60
	7	**24-10** 100	**24-10** 8	A	0	–	80	–	–	280	–	–	65	85
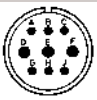	9 3 6	**24-11** 100/8 25/12	**24-11** 8 12	A	0	–	35	110	250	325	–	–	55	75
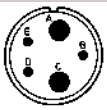	5 2 3	**24-12** 4 12	**24-12** 4 12	A	0	–	80	110	250	280	–	–	60	80
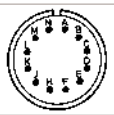	12	–	**24-19** 16	A	0	–	–	–	–	–	–	–	28	47
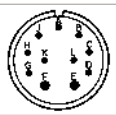	11 2 9	–	**24-20** 12 16	D	0	–	80	110	250	280	–	–	40	60
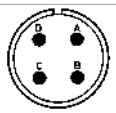	4	–	**24-22** 8	D	0	–	45	110	250		–	–	44	61
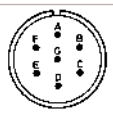	7	–	**24-27** 16	E	–	–	80	–	–	280	–	–	21	37
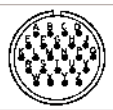	24	**24-28** 15	**24-28** 16	Instr.	0	–	80	110	250	280	–	–	40	65
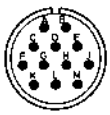	12	–	**24A24** 12	A	– – – –	– – – –	– – – –	– – – –	– – – –	– – – –	2 4 9 12	260 80 280 100	46	71
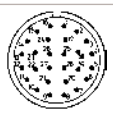	28	–	**24A28** 16	Instr.	–	–	65	146	235	–	–	–	42	75
	19 13 5 1		**24A51** 16 12 8	A	–	–	–	–	–	–	14	30	60	70

Dimensions shown in mm
Specifications and dimensions subject to change

View on Mating face of Pin Insulator	No. of Contacts	Contact arrangement Contact size VG	CA	Service rating	Insulator position N	V	W	X	Y	Z	Position	Special polarization	Insulator (g) including contacts Pin	Socket
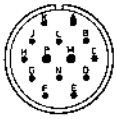	14 12 2	–	**28-2** 16 12	D	–	–	35	110	250	325	–	–	43	61
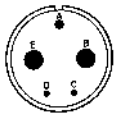	5 2 2 1	–	**28-5** 4 16 12	D	–	–	35	110	250	325	–	–	60	70
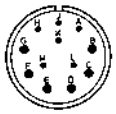	12 6 6	–	**28-9** 16 12	D	–	–	80	110	250	280	–	–	46	65
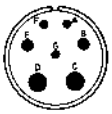	7 2 2 3	–	**28-10** 4 8 12	A (= A, B, C, D, E, F) D (= G)	–	–	80	110	250	280	–	–	80	91
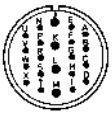	22 4 18	**28-11** 25 15	**28-11** 12 16	A	0	–	80	110	250	280	–	–	65	110
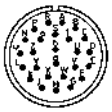	26	–	28-12 16	A	0	–	90	180	270	–	–	–	47	77
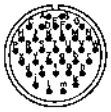	35	–	**28-15** 16	A	0	–	80	110	250	280	–	–	54	90
	20	–	**28-16** 16	A (A-L) D (M, N, P)	0	–	80	110	250	280	–	–	41	68
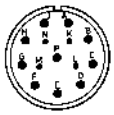	14 10 4	**28-20** 25 15	**28-20** 12 16	A	0	–	80	110	250	280	–	–	65	110
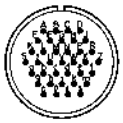	37	**28-21** 15	**28-21** 16	A	0	–	80	110	250	280	–	–	58	93
	For this Layout, rotations W and Z are only valid for the commercial CA Bayonet and not for the VG95234 versions.													
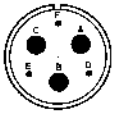	6 3 3	**28-22** 160/4 15/16	**28-22** 4 16	D	0	–	70	145	215	290	–	–	80	120
	All alternative insert position as above are permitted for VG95234 types.													

Dimensions shown in mm
Specifications and dimensions subject to change

ITT
ENGINEERED FOR LIFE

View on Mating face of Pin Insulator	No. of Contacts	Contact arrangement Contact size VG	CA	Service rating	Insulator position N	V	W	X	Y	Z	Position	Special polarization	Insulator (g) including contacts Pin	Socket
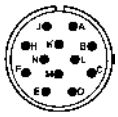	12	–	**28-51** 12	D	–	–	80	135	195	–	–	–	57	77
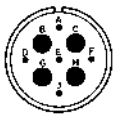	9 4 5	**28A16** 4 15	**28A16** 4 16	A (e) Instr.	0 –	– – – –	– – – –	– – – –	– – – –	– – – –	2 3 8 9	260 110 250 280	100	135
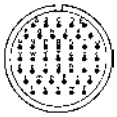	43	–	**28A51** 16	A	0 – – – –	– – – – –	– – – – –	– – – – –	– – – – –	– – – – –	3 4 8 9 12	110 80 250 280 100	64	107
	28 9 19	**28A63** 25 15	**28A63** 12 16	A	0	–	–	100	260	–	–	–	85	135
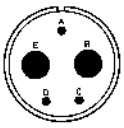	5 2 3	**32-1** 500/0 25/12	**32-1** 0 12	E (A) D (all others)	0	–	80	110	250	280	–	–	130	155
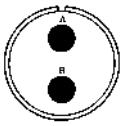	2	–	**32-5** 0	D	0	–	35	110	250	325	–	–	86	114
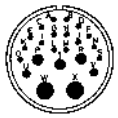	23 2 3 2 16	**32-6** 160/4 60/8 25/12 15/16	**32-6** 4 8 12 16	A	0	–	80	110	250	280	–	–	130	170
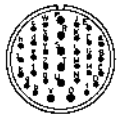	35 7 28	**32-7** 25 15	**32-7** 12 16	Instr. (A, B, U, I.) A (all others)	0	–	80	125	235	280	–	–	110	160
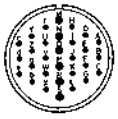	30 6 24	–	**32-8** 12 16	A	0	–	80	125	235	280	–	–	105	155
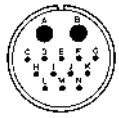	14 12 2	–	**32-9** 16 4	D	0	–	80	110	250	280	–	–	79	130

Dimensions shown in mm
Specifications and dimensions subject to change

View on Mating face of Pin Insulator	No. of Contacts	Contact arrangement Contact size VG	CA	Service rating	Insulator position N	V	W	X	Y	Z	Position	Special polarization	Insulator (g) including contacts Pin	Socket
	23 5 18	–	**32-13** 12 16	D	0	–	80	110	250	280	–	–	95	145
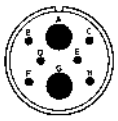	8 2 6	**32-15** 0 25	**32-15** 0 12	D	0	–	35	110	250	325	–	–	140	165
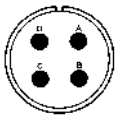	4	–	**32-17** 4	D	0	–	45	110	250	–	–	–	80	116
	54	–	**32A10** 16	A	– – – – –	– – – – –	– 80 – – –	– 110 – – –	– 250 – – –	– 280 – – –	3 4 8 9 12	110 80 250 280 100	89	132
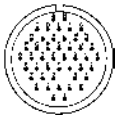	47	–	**32A47** 16	– A	– – – – – –	– – – – – –	– – – – – –	– – – – – –	– – – – – –	– – – – – –	2 3 4 8 9 12	260 110 80 250 280 100	73	120
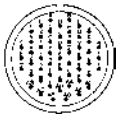	55	–	**32A55** 16	A	–	–	80	110	250	280	–	–	90	134
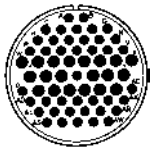	61 20 41	**32A69** 15 10	**32A69** 16 20	Instr.	0	–	–	110	250	–	–	–	49	84
	Not for through-bulkhead receptacle C1 / C2. No solder pot contacts available for #10/20 contacts.													
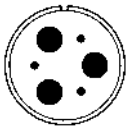	6 3 3	**36-3** 500/0 25/12	**36-3** 0 12	D	0	–	70	145	215	290	–	–	165	200
	All alternative insert positions as above are permitted for VG95234 types.													
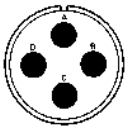	4	**36-5** 500/0	**36-5** 0	A	0	–	–	120	240	–	–	–	152	181

Dimensions shown in mm
Specifications and dimensions subject to change

ITT
ENGINEERED FOR LIFE

View on Mating face of Pin Insulator	No. of Contacts	Contact arrangement Contact size VG	CA	Service rating	Insulator position N	V	W	X	Y	Z	Position	Special polarization	Insulator (g) including contacts Pin	Socket
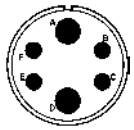	6 4 2	**36-6** 4 0	**36-6** 4 0	A	0	–	35	110	250	25	–	–	155	173
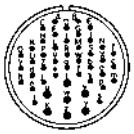	47 7 40	–	**36-7** 12 16	A	–	–	80	110	250	280	–	–	92	144
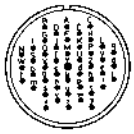	47 1 46	–	**36-8** 12 16	A	–	–	80	110	250	280	–	–	80	132
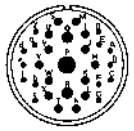	31 14 14 2 1	–	**36-9** 16 12 8 4	A	0	–	80	125	235	280	–	–	116	159
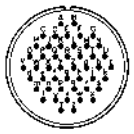	48	**36-10** 15	**36-10** 16	A	0	–	80	125	235	280	–	–	79	133
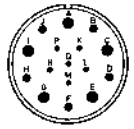	16 5 5 6	–	**36-14** 8 12 16	D		–	–	–	–	–	–	–	150	230
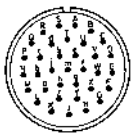	35	–	**36-15** 16	D (m) A (all others)	0	–	60	125	245	305	–	–	70	111
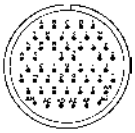	52	–	**36A34** 16	A	– – – – – – –	– – – – – – –	– – – – – – –	– – – – – – –	– – – – – – –	– – – – – – –	2 3 4 8 9 12 20	260 110 80 250 280 100 220	83	139

Dimensions shown in mm
Specifications and dimensions subject to change

View on Mating face of Pin Insulator	No. of Contacts	Contact arrangement Contact size VG	CA	Service rating	Insulator position* N	V	W	X	Y	Z	Position	Special polarization	Insulator (g) including contacts Pin	Socket
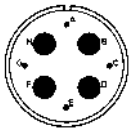	8 4 4	**36A35** 15 0	**36A35** 16 0	A	– – – –	– – – –	– – – –	– – – –	– – – –	– – – –	2 3 8 9	260 110 250 280	172	183
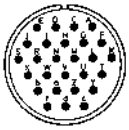	27	–	**36A46** 12	A	– – – – – –	– – – – – –	– – – – – –	– – – – – –	– – – – – –	– – – – – –	2 3 4 8 9 12	260 110 80 250 280 100	112	154
	39 8 31	–	**36A98** 8 16	A	0	–	–	110	–	–	–	–	160	140
♦ 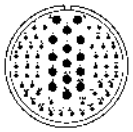	65 15 50	–	**36A99** 16 20*	Instr.	–	–	30	135	–	–	–	–	80	121
	No solder pot contacts available for #10/20 contacts.													

*Reduced contact termination 0,3 mm^2.

♦ Attention: For all insert rotations, it is possible for miss-mating to occur. It is the responsibility of the customer to ensure they have selected correctly.
* Attention: Connectors according to VG95234 are generally available with insert positions X and Y only.

Dimensions shown in mm
Specifications and dimensions subject to change

ITT
ENGINEERED FOR LIFE

Alternative Insert Positions

Indicates location of centerline of key or keyway of shells in fixed normal position. Insert is rotated as shown by arrow and letters.

Connectors according to VG95234 are generally available with insert positions X and Y only.

Tolerances:
10SL-20: ± 2°

22-36: ± 1,5°

32A69: ± 1°

36A99: ± 0,5°

Normal position

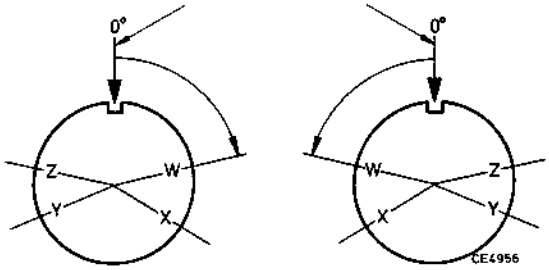

Pin
Mating face

Socket
Mating face

Special Insert Positions

A number of layouts allow for additional insert alternations. These special insert alternations are identified by a position number as shown in the table below.

Position	Polarization
2	260°
3	110°
4	80°
5	use pos. 3
6	85°
8	250°
9	280°
11	105°
12	100°
13	use pos. 8
14	30°
15	45°
16	120°
17	130°
18	150°
19	195°
20	220°
21	255°
22	290°
23	165°
24	330°
25	235°
26	125°

Positions

View shows mating side of pin or termination side of socket.

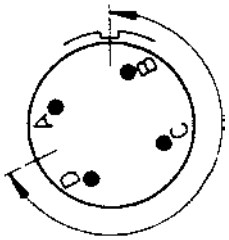

Insert positions are added without hyphen directly behind the contact type.

Example:
CA3106F32A10P$\boxed{2}$-B-01

Dimensions shown in mm
Specifications and dimensions subject to change

Contact Arrangements

Contact arrangement	No. of Contacts	Contact size 0 500	4 160	8 100 60	12 25	16 15	20 10
12S4	1					1	
14S4	1					1	
16-12	1		1				
18-6	1		1				
18-7	1			1			
20-2	1	1					
22-7	1	1					
10SL4	2					2	
14S9	2					2	
16S4	2					2	
16-11	2				2		
16A11	2				2		
18-3	2				2		
20-23	2			2			
22-1	2			2			
22-8	2				2		
24-9	2		2				
32-5	2	2					
10SL3	3					3	
14S1	3					3	
14S7	3					3	
16S5	3					3	
16-7	3			1		2	
16-10	3				3		
18-5	3				2	1	
18-21	3				3		
18-22	3					3	
20-3	3				3		
20-6	3					3	
20-19	3				3		
22-2	3			3			
22-9	3			3			
22-21	3	1				2	
12SA10	4					4	
14S2	4					4	
16-9	4				2	2	
18-4	4					4	
18-10	4				4		
18-13	4			1	3		
20-4	4				4		
20-24	4			2		2	
22-4	4			2	2		
22-10	4					4	
22-22	4			4			
22B22	4			4			
24-4	4	1				3	
24-22	4			4			
32-17	4		4				
36-5	4	4					

Contact arrangement	No. of Contacts	Contact size 0 500	4 160	8 100 60	12 25	16 15	20 10
14S5	5					5	
16S8	5					5	
18-11	5				5		
18-20	5					5	
20-14	5			2	3		
22-12	5			2		3	
24-12	5		2		3		
28-5	5		2		1	2	
32-1	5	2			3		
14S6	6					6	
18-12	6					6	
20-8	6			2		4	
20-17	6				5	1	
20-22	6			3		3	
22-5	6				2	4	
22-15	6				5	1	
28-22	6		3			3	
36-3	6	3			3		
36-6	6	2	4				
14SA7	7					7	
16S1	7					7	
18-9	7				2	5	
18-17	7				2	5	
20-15	7				7		
22-28	7				7		
24-2	7				7		
24-10	7			7			
24-27	7					7	
28-10	7		2	2	3		
18-8	8				1	7	
20-7	8					8	
22-23	8				8		
32-15	8	2			6		
36A35	8	4				4	
24-6	8				8		
20-16	9				2	7	
20-18	9				3	6	
20A9	9				9		
22-16	9				3	6	
22-20	9					9	
22-27	9			1		8	
24-11	9			3	6		
28A16	9		4			5	
18-1	10					10	
18-19	10					10	

Dimensions shown in mm
Specifications and dimensions subject to change

ITT
ENGINEERED FOR LIFE

Contact arrangement	No. of Contacts	Contact size 0 500	4 160	8 100 60	12 25	16 15	20 10
20-33	11					11	
24-20	11				2	9	
24-19	12					12	
24A24	12				12		
28-9	12				6	6	
28-51	12				12		
20-11	13					13	
20-27	14					14	
22-19	14					14	
28-2	14				2	12	
28-20	14				10	4	
32-9	14		2			12	
24-5	16					16	
24-7	16				2	14	
36-14	16			5	5	6	
20-29	17					17	
20A48	19					19	
22-14	19					19	
28-16	20					20	
28-11	22				4	18	
32-6	23		2	3	2	16	
32-13	23				5	18	
24-28	24					24	
20A24	24						24
28-12	26					26	
36A46	27				27		
24A28	28					28	
28A63	28				9	19	
32-8	30				6	24	
36-9	31		1	2	14	14	
28-15	35					35	
32-7	35				7	28	
36-15	35					35	
28-21	37					37	
36A98	39			8		31	

Contact arrangement	No. of Contacts	Contact size 0 500	4 160	8 100 60	12 25	16 15	20 10
28A51	43					43	
32A47	47					47	
36-7	47				7	40	
36-8	47				1	46	
36-10	48					48	
36A34	52					52	
32A10	54					54	
32A55	55					55	
32A69	61					20	41
36A99	65					15	50

Dimensions shown in mm
Specifications and dimensions subject to change

Box Mounting Receptacle - Front Mount

VG95234 – Style A
CA 3102E-B, additional modifications on page 12.
Description: Receptacle for front panel mounting with square flange.

Threaded holes in flange not possible.

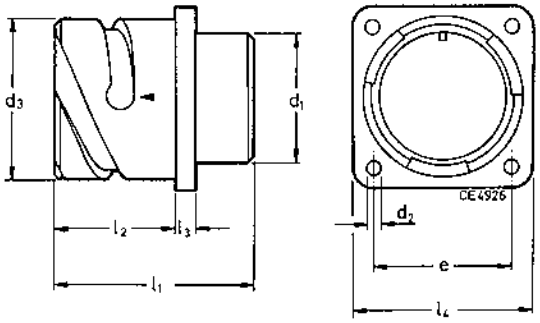

VG95234 Part no.	Cannon Part no.	d_1 max.	d_2 H13*	d_3 -0,15	l_1 ±0,3	l_2 ±0,4	l_3 ±0,2	l_4 ±0,3	Weight[1] g max.
VG95234A-10SL-*	CA3102E10SL-**-B	16,2	3,2	18,2	24,7	14,2	2,8	25,4	12
–	CA3102E12S-**-B	16,2	3,2	21,4	24,7	14,2	3,2	28,0	15
VG95234A-14S-*	CA3102E14S-**-B	19,2	3,2	24,6	24,7	14,2	3,2	30,0	17
VG95234A-16S-*	CA3102E16S-**-B	22,4	3,2	27,4	24,7	14,2	3,2	32,5	19
VG95234A-16-*	CA3102E16-**-B	22,4	3,2	27,4	33,8	19,0	3,2	32,5	22
VG95234A-18-*	CA3102E18-**-B	25,6	3,2	30,8	33,8	19,0	4,0	35,0	28
VG95234A-20-*	CA3102E20-**-B	29,0	3,2	34,2	33,8	19,0	4,0	38,0	33
VG95234A-22-*	CA3102E22-**-B	32,2	3,2	37,4	33,8	19,0	4,0	41,0	38
VG95234A-24-*	CA3102E24-**-B	35,3	3,7	40,9	33,8	20,6	4,0	44,5	46
VG95234A-28-*	CA3102E28-**-B	41,4	3,7	46,7	33,8	20,6	4,0	50,8	52
VG95234A-32-*	CA3102E32-**-B	47,8	4,3	53,4	33,8	22,2	4,0	57,0	64
VG95234A-36-*	CA3102E36-**-B	52,6	4,3	59,6	33,8	22,2	4,0	63,5	80

[1] Weight without insulator.
*Drilling tolerances according to DIN ISO 286.

CA02L-B, additional modifications on page 12.
Description: Receptacle for front panel mounting with solder pin contacts to solder into printed circuits. All pattern drawings upon request. For all other dimensions see above table. For contact arrangements with #16 and #12 contacts only.

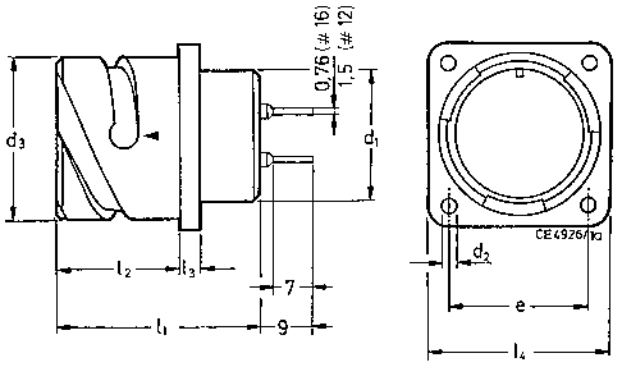

Dimensions shown in mm
Specifications and dimensions subject to change

ITT
ENGINEERED FOR LIFE

Box Mounting Receptacle - rear mount

VG95234 Style B1 (with threaded holes in flange).
CA3102E-B and Modifications, eg -04, -109 or -111
Description: Receptacle with square flange for rear panel mounting.

VG95234 Style B2 (with through holes in flange).
CA3102E-B and modifications, see page 12.
Description: Receptacle with square flange for rear panel mounting.

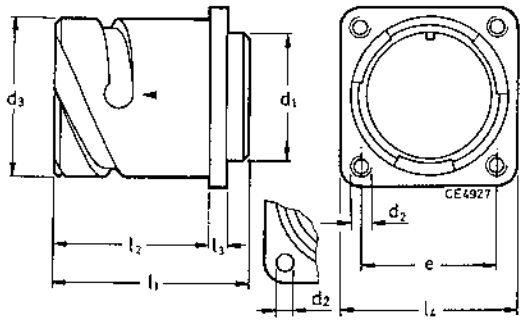

Style B2

VG95234 Part no.	Cannon Part no.	d_1 max.	d_2 B1 H13*	B2	d_3 -0,15	l_1 ±0,3	l_2 ±0,4	l_3 ±0,2	l_4 ±0,3	Weight[1] g max.
VG95234BX-10SL-*	CA3102E10SL-*B-***	16,2	M4	3,2	18,2	24,7	18,2	2,8	25,4	14
–	CA3102E12S-*B-***	16,2	M4	3,2	21,4	24,7	18,2	3,2	28,0	18
VG95234BX-14S-*	CA3102E14S-*B-***	19,2	M4	3,2	24,6	24,7	18,2	3,2	30,0	21
CG95234BX-16S-*	CA3102E16S-*B-***	22,4	M4	3,2	27,4	24,7	18,2	3,2	32,5	22
VG95234BX-16-*	CA3102E16-*B-***	22,4	M4	3,2	27,4	33,8	23,05	3,2	32,5	27
VG95234BX-18-*	CA3102E18-*B-***	25,6	M4	3,2	30,8	33,8	23,05	4,0	35,0	33
VG95234BX-20-*	CA3102E20-*B-***	29,0	M4	3,2	34,2	33,8	23,05	4,0	38,0	37
VG95234BX-22-*	CA3102E22-*B-***	32,2	M4	3,2	37,4	33,8	23,05	4,0	41,0	42
VG95234BX-24-*	CA3102E24-*B-***	35,3	M4	3,7	40,9	33,8	23,05	4,0	44,5	48
VG95234BX-28-*	CA3102E28-*B-***	41,4	M5	3,7	46,7	33,8	24,05	4,0	50,8	58
VG95234BX-32-*	CA3102E32-*B-***	47,8	M5	4,3	53,4	33,8	24,05	4,0	57,0	72
VG95234BX-36-*	CA3102E36-*B-***	54,1	M5	4,3	59,6	33,8	24,05	4,0	63,5	84

[1] Weight without insulator.
*Drilling tolerances according to DIN ISO 286.

CA20L-B, additional modifications on page 12.
Description: Receptacle for rear panel mounting with solder pin contacts to solder into printed circuits. All pattern drawings upon request. For all other dimensions see above table. For contact arrangements with #16 and #12 contacts only.

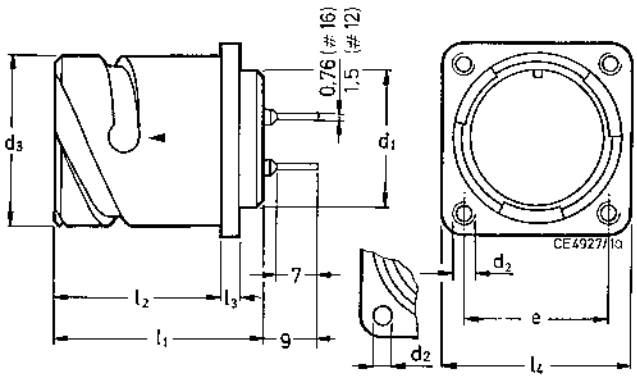

Mod. -05

Dimensions shown in mm
Specifications and dimensions subject to change

Thru-Bulkhead Receptacle

VG95234 – Style C1
TBF-B, additional modifications on page 12.
Description: Bulkhead receptacle with mounting flange - with threaded holes.

VG95234 – Style C2
TBF-B-05, additional modifications on page 12.
Description: Bulkhead receptacle with mounting flange - with through holes.

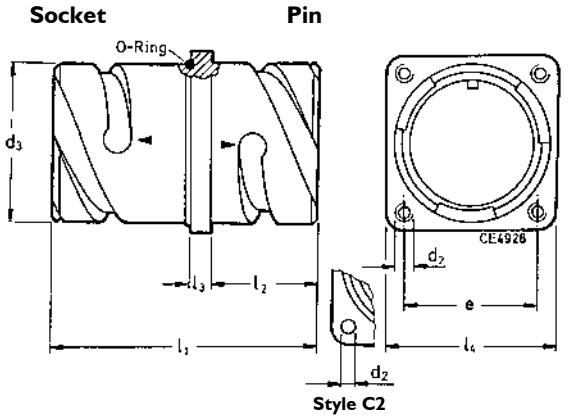

VG95234 Part no.	Cannon Part no.	d_2 C1	C2 H13* Ø	d_2 -0,15	e ±0,1	l_1 ±0,7	l_2 ±0,3	l_3 ±0,2	l_4 ±0,3	Weight[1] g max.
VG95234CX-10SL-*	TBF10SL-*B-***	M4	3,2	18,2	18,2	37,5	14,2	2,8	25,4	17
–	TBF12S-*B-***	M4	3,2	21,4	20,6	37,5	14,2	3,2	28,0	24
VG95234CX-14S-*	TBF14S-*B-***	M4	3,2	24,6	23,0	37,5	14,2	3,2	30,0	29
VG95234CX-16S-*	TBF16S-*B-***	M4	3,2	27,4	24,6	37,5	14,2	3,2	32,5	34
VG95234CX-16-*	TBF16-*B-***	M4	3,2	27,4	24,6	51,4	19,0	3,2	32,5	41
VG95234CX-18-*	TBF18-*B-***	M4	3,2	30,8	27,0	51,4	19,0	4,0	35,0	49
VG95234CX-20-*	TBF20-*B-***	M4	3,2	34,2	29,4	51,4	19,0	4,0	38,0	56
VG95234CX-22-*	TBF22-*B-***	M4	3,2	37,4	31,8	51,4	19,0	4,0	41,0	61
VG95234CX-24-*	TBF24-*B-***	M4	3,7	40,9	34,9	51,4	20,6	4,0	44,5	65
VG95234CX-28-*	TBF28-*B-***	M5	3,7	46,7	39,7	51,4	20,6	4,0	50,8	76
VG95234CX-32-*	TBF32-*B-***	M5	4,3	53,4	44,5	51,4	22,2	4,0	57,0	92
VG95234CX-36-*	TBF36-*B-***	M5	4,3	59,6	49,2	51,4	22,2	4,0	63,5	103

*Drilling tolerances according to DIN ISO 286

Straight Plug with cable clamp

VG95234 – Style D
CA3106E–B, additional modifications on page 12.
Description: Straight plug with endbell, cable clamp and telescoping bushing.

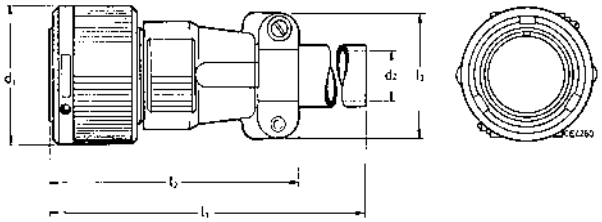

VG95234 Part no.	Cannon Part no.	d_1 max.	d_2[2] max.	l_1 max.	l_2 max.	l_3 max.	l_4 max.	Weight[1] g max.
VG95234D-10SL-*	CA3106E10SL-**B-***	22,8	6,5	115	55	22,7	22,7	30
–	CA3106E12S-**B-***	26,0	6,5	115	55	22,7	22,7	37
VG95234D-14S-*	CA3106E14S-**B-***	29,2	9,0	115	60	27,5	27,5	44
VG95234D-16S-*	CA3106E16S-**B-***	32,0	11,0	115	60	30,0	30,0	54
VG95234D-16-*	CA3106E16-**B-***	32,0	11,0	120	70	30,0	30,0	62
VG95234D-18-*	CA3106E18-**B-***	36,5	14,2	120	75	33,0	33,0	70
VG95234D-20-*	CA3106E20-**B-***	39,9	15,8	120	75	37,5	37,5	85
VG95234D-22-*	CA3106E22-**B-***	43,1	15,8	120	75	37,5	37,5	92
VG95234D-24-*	CA3106E24-**B-***	46,6	21,4	120	90	43,3	43,3	127
VG95234D-28-*	CA3106E28-**B-***	53,4	21,4	120	90	48,0	43,3	154
VG95234D-32-*	CA3106E32-**B-***	60,1	26,7	120	90	55,0	51,7	199
VG95234D-36-*[3]	CA3106E36-**B-***	66,3	31,7	130	100	58,0	58,0	260

[1] Weight without insulator, grommets and contacts. [2] For max. cable entry. [3] For contact insert 36-5P a support washer is included.

Dimensions shown in mm
Specifications and dimensions subject to change

ITT
ENGINEERED FOR LIFE

Plug 90° with cable clamp or endbell for flex tube

VG95234 – Style E1
CA3108F-B, additional modifications on page 12.
Description: Plug 90° with endbell for flex tube.

VG95234 – Style E
CA3108E-B, additional modifications on page 12.
Description: Plug 90° with cable clamp and telescoping bushing.

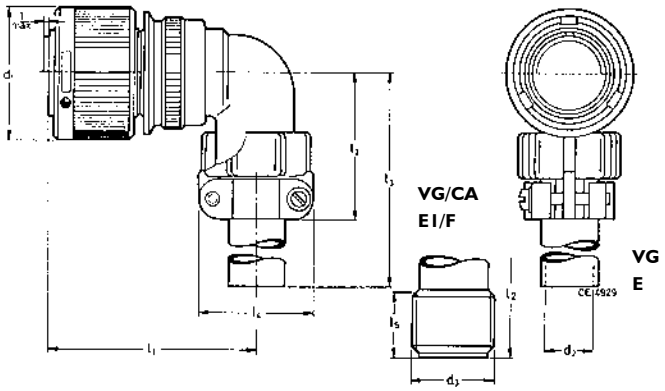

VG95234 Part no.	Cannon Part no.	d_3-Thread Style E1 CA3108F	d_1 max.	d_2[2] max.	l_1 max.	l_2 max. E	l_3 max. E1	l_3 max. E	l_4 max.	l_5	Weight[1] g E	Weight[1] g E1
VG95234EX-10SL-*	CA3108X10SL-**B-***	5/8-24NEF-2A	22,8	6,5	45	42	30	100	22,7	9,4	37	27
–	CA3108X12S-**B-***	5/8-24NEF-2A	26,0	6,5	45	42	30	100	22,7	9,4	45	35
VG95234EX-14S-*	CA3108X14S-**B-***	3/4-20UNEF-2A	29,2	9,0	47	42	30	100	27,5	9,4	58	43
VG95234EX16S-*	CA3108X16S-**B-***	7/8-20UNEF-2A	32,0	11,0	48	45	30	100	30,0	9,4	68	48
VG95234EX-16-*	CA3108X16-**B-***	7/8-20UNEF-2A	32,0	11,0	57	45	30	100	30,0	9,4	78	58
VG95234EX-18-*	CA3108X18-**B-***	1-20UNEF-2A	36,5	14,2	58	53	35	100	33,0	9,4	90	58
VG95234EX-20-*	CA3108X20-**B-***	1 3/16-18UNEF-2A	39,9	15,8	61	53	35	100	37,5	9,4	109	74
VG95234EX-22-*	CA3108X22-**B-***	1 3/16-18UNEF-2A	43,1	15,8	61	53	35	100	37,5	9,4	113	78
VG95234EX-24-*	CA3108X24-**B-***	1 7/16-18UNEF-2A	46,6	21,4	66	58	40	100	43,3	9,4	159	104
VG95234EX-28-*	CA3108X28-**B-***	1 7/16-18UNEF-2A	53,4	21,4	66	58	40	100	43,3	9,4	181	126
VG95234EX-32-*	CA3108X32-**B-***	1 3/4 -18UNS-2A	60,1	26,7	72	66	45	110	51,7	11,0	245	160
VG95234EX-36-*	CA3108 36-**B-***	2 -18UNS-2A	66,3	31,7	75	69	50	110	58,0	12,6	300	190

Cable Connection Receptacle with cable clamp

VG95234 – Style F
CA3101E-B, additional modifications on page 12.
Description: Cable connection receptacle with cable clamp and telescoping bushing.

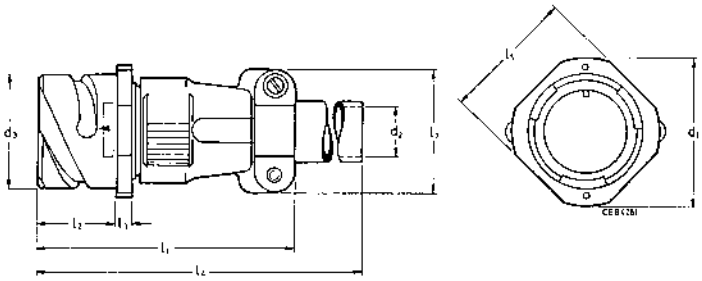

VG95234 Part no.	Cannon Part no.	d_1 max.	d_2[2]	d_3 -0,15	l_1 max.	l_2 ±0,1	l_3 ±0,2	l_4 max.	l_5 ±0,2	l_7 max.	Weight[1] g max.
VG95234F-10SL-*	CA3101E10SL-**B-***	25,2	6,5	18,2	57	18,2	2,8	120	20,6	22,7	35
–	CA3101E12S-**B-***	27,8	6,5	21,4	57	18,2	3,2	120	23,6	22,7	43
VG95234F-14S-*	CA3101E14S-**B-***	29,8	9,0	24,6	59	18,2	3,2	120	25,4	27,5	50
VG95234F-16S-*	CA3101E16S-**B-***	32,3	11,0	27,4	60	18,2	3,2	120	28,6	30,0	60
VG95234F-16-*	CA3101E16-**B-***	32,3	11,0	27,4	68	23,05	3,2	125	28,6	30,0	65
VG95234F-18-*	CA3101E18-**B-***	34,8	14,2	30,8	72	23,05	4,0	125	31,7	33,0	80
VG95234F-20-*	CA3101E20-**B-***	37,8	15,8	34,2	72	23,05	4,0	125	34,9	37,5	95
VG95234F-22-*	CA3101E22-**B-***	41,1	15,8	37,4	72	23,05	4,0	125	38,1	37,5	105
VG95234F-24-*	CA3101E24-**B-***	44,6	21,4	40,9	78	23,05	4,0	125	41,3	43,3	140
VG95234F-28-*	CA3101E28-**B-***	50,9	21,4	46,7	79	24,05	4,0	125	47,6	43,3	160
VG95234F-32-*	CA3101E32-**B-***	57,1	26,7	53,4	78	24,05	4,0	125	54,0	51,7	205
VG95234F-36*-*[3]	CA3101E36*)-**B-***	63,6	31,7	59,6	78	24,05	4,0	135	60,6	58,0	270

[1] Weight without insulator, grommets and contacts. [2] For max. cable entry. [3] For contact insert 36-5P a support washer is included.

Dimensions shown in mm
Specifications and dimensions subject to change

Straight Plug for heat shrink boot

VG95234 – Style G
CA3106E–B, and modification -02, -03 or -06 additional modifications on page 12.
Description: Straight plug with with adapter for heat shrink boots

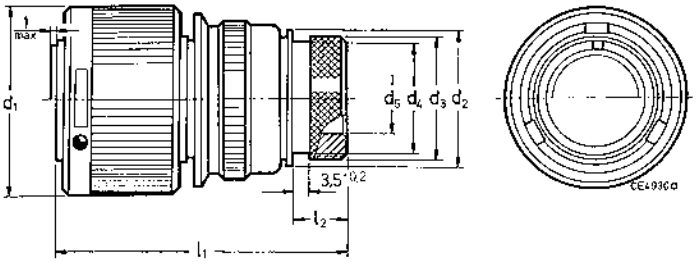

VG95234 Part no.	Cannon Part no.	d_1 max.	d_2 ±0,2	d_3 ±0,2	d_4 max.	d_4 min.	l_1 max.	l_2 ±0,5	Weight[1] g max.
VG95234G-10SL-*	CA3106E10SL-**B-***	22,8	17,0	15,5	13,3	7,7	50	11,7	24
–	CA3106E12S-**B-***	26,0	17,8	15,5	13,3	7,9	50	11,7	35
VG95234G-14S-*	CA3106E14S-**B-***	29,2	20,1	19,1	17,0	10,6	50	11,7	41
VG95234G-16S-*	CA3106E16S-**B-***	32,0	23,5	23,9	21,9	13,5	50	11,7	51
VG95234G-16-*	CA3106E16-**B-***	32,0	23,5	23,9	21,9	13,5	60	11,7	58
VG95234G-18-*	CA3106E18-**B-***	36,5	26,5	23,9	21,9	14,6	60	11,7	65
VG95234G-20-*	CA3106E20-**B-***	39,9	30,2	29,6	26,2	18,7	65	12,7	75
VG95234G-22-*	CA3106E22-**B-***	43,1	33,6	29,6	26,2	20,8	65	12,7	80
VG95234G-24-*	CA3106E24-**B-***	46,6	38,1	37,8	34,5	24,6	65	12,7	95
VG95234G-28-*	CA3106E28-**B-***	53,4	41,4	37,8	34,5	27,0	65	12,7	120
VG95234G-32-*	CA3106E32-**B-***	60,1	48,6	47,8	43,6	33,3	70	15,2	165
VG95234G-36-*	CA3106E36-**B-***	66,3	54,8	47,8	43,6	38,5	80	15,2	180

[1] Weight without insulator, grommets and contacts.

Straight Plug for flex tube

VG95234 – Style H
CA3106E-F-B, additional modifications on page 12.
Description: Straight plug for flex tube.

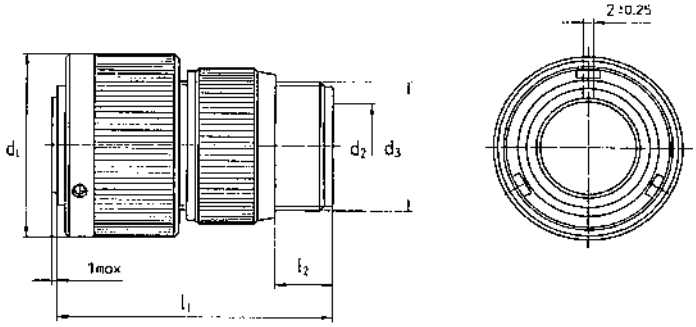

VG95234 Part no.	Cannon Part no.	d_3-Thread	d_1 max.	d_2[2]	l_1 max.	l_2 min.	Weight[1] g max.
VG95234H-10SL-*	CA3106F10SL-**B-***	5/8-24NEF-2A	22,8	8,2	50	9,5	21
–	CA3106F12S-**B-***	5/8-24NEF-2A	26,0	8,2	50	9,5	29
VG95234H-14S-*	CA3106F14S-**B-***	3/4-20UNEF-2A	29,2	11,1	50	9,5	33
VG95234H-16S-*	CA3106F16S-**B-***	7/8-20UNEF-2A	32,0	14,3	50	9,5	42
VG95234H-16-*	CA3106F16-**B-***	7/8-20UNEF-2A	32,0	14,3	60	9,5	51
VG95234H-18-*	CA3106F18-**B-***	1-20UNEF-2A	36,5	16,7	60	9,5	59
VG95234H-20-*	CA3106F20-**B-***	1 3/16-18UNEF-2A	39,9	19,8	60	9,5	59
VG96234H-22-*	CA3106F22-**B-***	1 3/16-18UNEF-2A	43,1	19,8	60	9,5	62
VG95234H-24-*	CA3106F24-**B-***	1 7/16-18UNEF-2A	46,6	25,4	65	9,5	84
VG95234H-28-*	CA3106F28-**B-***	1 7/16-18UNEF-2A	53,4	27,0	65	9,5	100
VG95234H-32-*	CA3106F32-**B-***	1 3/4-18UNS-2A	60,1	32,5	65	11,0	116
VG95234H-36-*	CA3106F36-**B-***	2-18UNS-2A	66,3	35,7	80	11,8	142

[1] Weight without insulator, grommets and contacts. [2] For max. cable entry.

Dimensions shown in mm
Specifications and dimensions subject to change

Wall Mounting Receptacle with cable clamp

VG95234 – Style J1.
CA3100E-B, additional modifications on page 12.
Description: Wall mounting receptacle with cable clamp and telescope bushing, threaded holes in flange, for rear mounting.

VG95234 – Style J2.
CA3100E-B, and modification -05, additional modifications on page 12.
Description: Same as Style J1 but with through holes in flange, for rear mounting.

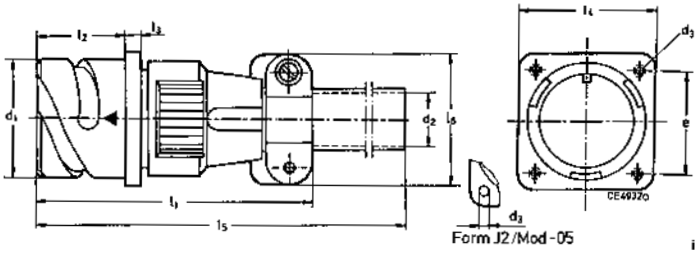

VG95234 Part no.	Cannon Part no.	d_1 -0,15	d_2 [1]	d_3 J1	J2 H13*	l_1 max.	l_2 +0,4	l_2 ±0,2	l_4 ±0,3	l_5 max.
VG95234*JX-10SL-*	CA3100E10SL-**-B-***	18,2	6,5	M4	3,2	57	18,2	2,8	25,4	120
–	CA3100E12S-**-B-***	21,4	6,5	M4	3,2	57	18,2	3,2	28,0	120
VG95234*JX-14S-*	CA3100E14S-**-B-***	24,6	9,0	M4	3,2	59	18,2	3,2	30,0	120
VG95234*JX-16S-*	CA3100E16S-**-B-***	27,4	11,0	M4	3,2	60	18,2	3,2	32,5	120
VG95234*JX-16-*	CA3100E16-**-B-***	27,4	11,0	M4	3,2	68	23,05	3,2	32,5	125
VG95234*JX-18-*	CA3100E18-**-B-***	30,8	14,2	M4	3,2	72	23,05	4,0	35,0	125
VG95234*JX-20-*	CA3100E20-**-B-***	34,2	15,8	M4	3,2	72	23,05	4,0	38,0	125
VG95234*JX-22-*	CA3100E22-**-B-***	37,4	15,8	M4	3,2	72	23,05	4,0	41,0	125
VG95234*JX-24-*	CA3100E24-**-B-***	40,9	21,4	M4	3,7	78	23,05	4,0	44,5	125
VG95234*JX-28-*	CA3100E28-**-B-***	46,7	21,4	M5	3,7	79	24,05	4,0	50,8	125
VG95234*JX-32-*	CA3100E32-**-B-***	53,4	26,7	M5	4,3	78	24,05	4,0	57,0	125
VG95234*JX-36-*[2]	CA3100E36-**-B-***	59,6	31,7	M5	4,3	24,05	4,0	63,5	135	190

[1] For max. cable entry. [2] For contact insert 36-5P a support washer is included.
*Drilling tolerances according to DIN ISO 286

Plug 90°, Shielded for flex tube

VG95234 – Style K.
CA3108F, and modifications -13, -14 or -15, additional modifications on page 12.
Description: Shielded plug with 90° endbell for flex tube, grounding spring on the barrel. No rear accessories to mount cable braid to the endbell.

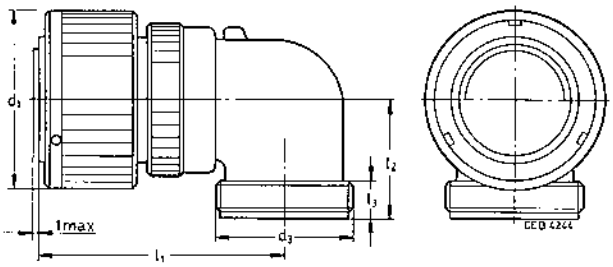

VG95234 Part no.	Cannon Part no.	d_3-Thread	d_1 max.	l_1 max.	l_2 max.	l_3 min.	Weight[1] g max.
	CA3108F10SL-**-B-***	5/8-24UNEF-2A	22,8	45	22	9,4	27
–	CA3108F12S-**-B-***	5/8-24UNEF-2A	26,0	45	22	9,4	35
VG95234K-14S-*	CA3108F14S-**-B-***	3/4-20UNEF-2A	29,2	47	24	9,4	43
VG95234K-16S-*	CA3108F16S-**-B-***	7/8-20UNEF-2A	32,0	48	25	9,4	48
VG95234K-16-*	CA3108F16-**-B-***	7/8-20UNEF-2A	32,0	57	25	9,4	58
VG95234K-18-*	CA3108F18-**-B-***	1-20UNEF-2A	36,5	58	27	9,4	58
VG95234K-20-*	CA3108F20-**-B-***	1 3/16-18UNEF-2A	39,9	61	29	9,4	74
VG95234K-22-*	CA3108F22-**-B-***	1 3/16-18UNEF-2A	43,1	61	30	9,4	78
VG95234K-24-*	CA3108F24-**-B-***	1 7/16-18UNEF-2A	46,6	66	32	9,4	104
VG95234K-28-*	CA3108F28-**-B-***	1 7/16-18UNEF-2A	53,4	66	34	9,4	126
CG95234K-32-*	CA3108F32-**-B-***	1 3/4-18UNS-2A	60,1	72	39,5	11,0	160
VG95234K-36-*	CA3108F36-**-B-***	2-18UNS-2A	66,3	75	45	12,6	190

[1] Weight without insulator, grommets and contacts.

Dimensions shown in mm
Specifications and dimensions subject to change

Straight Plug, shielded for flex tube

VG95234 – Style L
CA3106F-B, and modifications -13, -14 or -15, additional modifications on page 12.
Description: Straight plug with endbell for flex tube, grounding spring on the barrel.

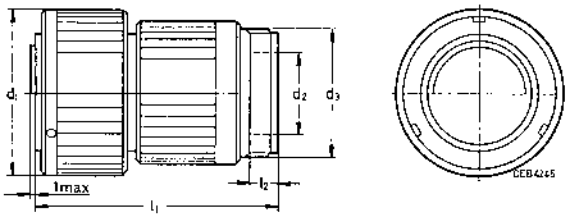

VG95234 Part no.	Cannon Part no.	d_3-Thread	d_1	d_2[2] max.	l_1	l_2 min.	Weight[1] g max.
–	CA3106F10SL-**-B-***	5/8-24UNEF-2A	22,8	8,2	50	9,5	21
–	CA3106F12S-**-B-***	5/8-24UNEF-2A	26,0	8,2	50	9,5	29
VG95234L-14S-*	CA3106F14S-**-B-***	3/4-20UNEF-2A	29,2	11,1	50	9,5	33
VG95234L-16S-*	CA3106F16S-**-B-***	7/8-20UNEF-2A	32,0	14,3	50	9,5	42
VG95234L-16-*	CA3106F-16-**-B-***	7/8-20UNEF-2A	32,0	14,3	60	9,5	51
VG95234L-18-*	CA3106F-18-**-B-***	1-20UNEF-2A	36,5	16,7	60	9,5	59
VG95234L-20-*	CA3106F-20-**-B-***	1 3/16-18UNEF-2A	39,9	19,8	60	9,5	58
VG95234L-22-*	CA3106F-22-**-B-***	1 3/16-18UNEF-2A	43,1	19,8	60	9,5	62
VG95234L-24-*	CA3106F-24-**-B-***	1 7/16-18UNEF-2A	46,6	25,4	65	9,5	84
VG95234L-28-*	CA3106F-28-**-B-***	1 7/16-18UNEF-2A	53,4	27,0	65	9,5	100
VG95234L-32-*	CA3106F-32-**-B-***	1 3/4-18UNS-2A	60,1	32,5	65	11,0	116
VG95234L-36-*	CA3106F-36-**-B-***	2-18UNS-2A	66,3	35,7	80	11,8	142

[1] Weight without insulator, grommets and contacts. [2] For max. cable entry.

Straight Plug, shielded

VG95234 – Style M
CA3106E-B, and modifications -13, -14 or -15, additional modifications on page 12.
Description: Straight, shielded plug with endbell for shielding braid, and heat shrink boots, grounding spring on the barrel.

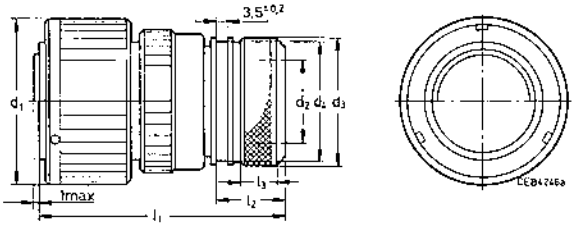

VG95234 Part no.	Cannon Part no.	d_1 max.	d_2[2] min.	d_3 ±0,5	d_4 max.	l_1 max.	l_2 +1	l_3 ±0,5	Weight[1] g max.
VG95234M-10SL-*	CA3106E10SL-**-B-***	22,8	7,7	18,5	16,3	55,0	17,0	7,0	40
–	CA3106E12S-**-B-***	26,0	9,3	20,0	17,0	55,0	17,0	7,0	42
VG95234M-14S-*	CA3106E14S-**-B-***	29,2	10,6	22,0	20,0	55,0	17,0	7,0	45
VG95234M-16S-*	CA3106E16S-**-B-***	32,0	13,5	25,0	23,0	60,0	18,0	8,0	55
VG95234M-16-*	CA3106E16-**-B-***	32,0	13,5	25,0	23,0	70,0	18,0	8,0	65
VG95234M-18-*	CA3106E18-**-B-***	36,5	14,6	28,0	24,5	70,0	18,0	8,0	75
VG95234M-20-*	CA3106E20-**-B-***	39,9	18,5	32,0	28,5	70,0	18,0	10,0	85
VG95234M-22-*	CA3106E22-**-B-***	43,1	20,8	34,0	30,5	70,0	18,0	10,0	100
VG95234M-24-*	CA3106E24-**-B-***	46,6	24,6	38,0	34,5	70,0	18,0	10,0	115
VG95234M-28-*	CA3106E28-**-B-***	53,4	27,0	41,0	37,5	70,0	18,0	10,0	130
VG95234M-32-*	CA3106E32-**-B-***	60,1	33,3	48,0	44,0	70,0	18,0	10,0	170
VG95234M-36-*	CA3106E36-**-B-***	66,3	38,5	55,0	51,0	80,0	18,0	10,0	190

[1] Weight without insulator, grommets and contacts. [2] For max. cable entry.

Dimensions shown in mm
Specifications and dimensions subject to change

ITT
ENGINEERED FOR LIFE

Wall Mounting Receptacle, shielded

VG95234 – Style N1.
CA3100E-B, and modifications -13, -14 or -15, see page 12.
Description: Shielded receptacle with endbell for shielding braid, and heat shrink boots. With threaded holes in flange, for rear mounting.

VG95234 – Style N2.
CA3100E-B, and modifications -05-13, -05-14 or -05-15, see page 12.
Description: Same as Style N1 but with through holes in flange, for rear mounting.

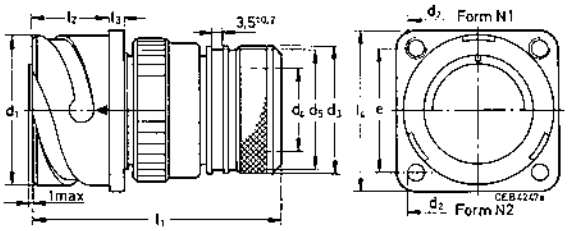

VG95234 Part no.	Cannon Part no.	d_1 -0,15	d_2 Thread H13* N1	N2	d_3 ±0,5	d_4[2] min.	d_5 max.	e ±0,1	l_1 max.	l_2 +0,4	l_3 ±0,2	l_4 +0,3	Weight[1] g max.
VG95234*NX-10SL-*	CA3100E10SL-**-B-***	18,2	M4	3,2	18,5	7,7	16,3	18,2	55	18,2	2,8	25,4	45
VG95234*NX-14S-*	CA3100E14S-**-B-***	24,6	M4	3,2	22,0	10,6	20,0	23,0	58	18,2	3,2	30,0	55
VG95234*NX-16S-*	CA3100E16S-**-B-***	27,4	M4	3,2	25,0	13,5	23,0	24,6	70	18,2	3,2	32,5	65
VG95234*NX-16-*	CA3100E16-**-B-***	27,4	M4	3,2	25,0	13,5	23,0	24,6	70	23,05	3,2	32,5	75
VG95234*NX-18-*	CA3100E18-**-B-***	30,8	M4	3,2	28,0	14,6	24,5	27,0	70	23,05	4,0	35,0	85
VG95234*NX-20-*	CA3100E20-**-B-***	34,2	M4	3,2	32,0	18,5	28,5	29,4	70	23,05	4,0	38,4	95
VG95234*NX-22-*	CA3100E22-**-B-***	37,4	M4	3,2	34,0	20,8	30,5	31,8	70	23,05	4,0	41,0	105
VG95234*NX-24-*	CA3100E24-**-B-***	40,9	M4	3,7	38,0	24,6	34,5	34,9	70	23,05	4,0	44,5	120
VG95234*NX-28-*	CA3100E28-**-B-***	46,7	M5	3,7	41,0	27,0	37,5	39,7	70	24,05	4,0	50,8	150
VG95234*NX-32-*	CA3100E32-**-B-***	53,4	M5	4,3	48,0	33,3	44,0	44,5	75	24,05	4,0	57,0	190
VG95234*NX-36-*	CA3100E36-**-B-***	59,6	M5	4,3	55,0	38,5	51,0	49,2	85	24,05	4,0	63,5	220

[1] Weight without insulator, grommets and contacts. [2] For max. cable entry.
*Drilling tolerances according to DIN ISO 286.

[1] Weight without insulator, grommets and contacts.

Dimensions shown in mm
Specifications and dimensions subject to change

Straight Plug, shielded with adapter for heat shrink boots

VG95234 – Style T.
CA3106E-B-32-DXX, and modifications 02-41, 03-41 or 06-41, see page 12.
Description: Straight plug, shielded ground spring on the barrel with endbell for heat shrink boot.

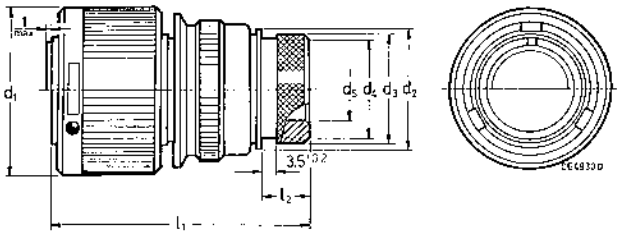

VG95234 Part no.	Cannon Part no.	d_1 max.	d_3 ±0,2	d_3 ±0,2	d_4 max.	d_5 min.	l_1 max.	l_2 ±0,5	Weight[1)] g max.
VG95234T-10SL-*	CA3106E10SL-**B-***	22,8	17,0	15,5	13,3	7,7	50	11,7	24
–	CA3106E12S-**B-***	26,0	17,8	15,5	13,3	7,9	50	11,7	35
VG95234T-14S-*	CA3106E14S-**B-***	29,2	20,1	19,1	17,0	10,6	50	11,7	41
VG95234T-16S-*	CA3106E16S-**B-***	32,0	23,5	23,9	21,9	13,5	50	11,7	51
VG95234T-16-*	CA3106E16-**B-***	32,0	23,5	23,9	21,9	13,5	60	11,7	58
VG95234T-18-*	CA3106E18-**B-***	36,5	26,5	23,9	21,9	14,6	60	11,7	65
VG95234T-20-*	CA3106E20-**B-***	39,9	30,2	29,6	26,2	18,7	65	12,7	75
VG95234T-22-*	CA3106E22-**B-***	43,1	33,6	29,6	26,2	20,8	65	12,7	80
VG95234T-24-*	CA3106E24-**B-***	46,6	38,1	37,8	34,5	24,6	65	12,7	95
VG95234T-28-*	CA3106E28-**B-***	53,4	41,4	37,8	34,5	27,0	65	12,7	120
VG95234T-32-*	CA3106E32-**B-***	60,1	48,6	47,8	43,6	33,3	70	15,2	165
VG95234T-36-*	CA3106E36-**B-***	66,3	54,8	47,8	43,6	38,5	80	15,2	180

Dimensions shown in mm
Specifications and dimensions subject to change

ITT
ENGINEERED FOR LIFE

Wall Mounting Receptacle for heat shrink boots

VG95234 – Style U1.
CA3100E-B, and modifications -02, -03, or -06, see page 12
Description: Wall mounting receptacle with adapter for heat shrink boots, with threaded holes in flange, for rear mounting.

VG95234 – Style U2.
CA3100E-B, and modifications -02-05, -03-05, -06-05, see page 12.
Description: Same as Style U1 but with through holes in flange, for rear mounting.

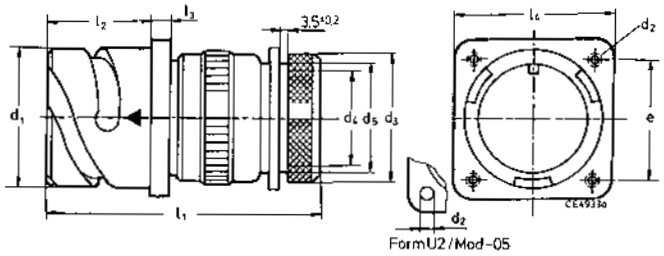

VG95234 Part no.	Cannon Part no.	d_1 -0,15	d_2 Thread	Ø H13*	d_3 ±0,2	d_4	d_5 max.	e ±0,1	l_1 max.	l_2 +0,4	l_3 ±0,2	l_4 +0,3	Weight[1] g max.
VG95234UX-10SL-*	CA3100E10SL-**-B-***	18,2	M4	3,2	15,5	7,7	13,3	18,2	57	18,2	2,8	25,4	35
–	CA3100E12S-**-B-***	21,4	M4	3,2	15,5	7,9	13,3	20,6	57	18,2	3,2	28,0	45
VG95234UX-14S-*	CA3100E14S-**-B-***	24,6	M4	3,2	19,1	10,6	17,0	23,0	57	18,2	3,2	30,0	50
VG95234UX-16S-*	CA3100E16S-**-B-***	27,4	M4	3,2	23,9	13,5	21,9	24,6	57	18,2	3,2	32,5	60
VG95234UX-16-*	CA3100E16-**-B-***	27,4	M4	3,2	23,9	13,5	21,9	24,6	63	23,05	3,2	32,5	65
VG95234UX-18-*	CA3100E18-**-B-***	30,8	M4	3,2	23,9	14,6	21,9	27,0	65	23,05	4,0	35,0	80
VG95234UX-20-*	CA3100E20-**-B-***	34,2	M4	3,2	29,6	18,7	26,2	29,4	68	23,05	4,0	38,0	95
VG95234UX-22-*	CA3100E22-**-B-***	37,4	M4	3,2	29,6	20,8	26,2	31,8	68	23,05	4,0	41,0	105
VG95234UX-24-*	CA3100E24-**-B-***	40,9	M4	3,7	37,8	24,6	34,5	34,9	70	23,05	4,0	44,5	140
VG95234UX-28-*	CA3100E28-**-B-***	46,7	M5	3,7	37,8	27,0	34,5	39,7	71	24,05	4,0	50,8	160
VG95234UX-32-*	CA3100E32-**-B-***	53,4	M5	4,3	47,8	33,3	43,6	44,5	74	24,05	4,0	57,0	205
VG95234UX-36-*	CA3100E36-**-B-***	59,6	M5	4,3	47,8	38,5	43,6	49,2	74	24,05	4,0	63,5	270

[1] Weight without insulator, grommets and contacts.
*Drilling tolerances according to DIN ISO 286

Cable Connection Receptacle for heat shrink boots

VG95234 – Style V.
CA3101E-B, and modifications -02, -03 or -06, see page 12.
Description: Cable connection receptacle with adapter for heat shrinkable boots.

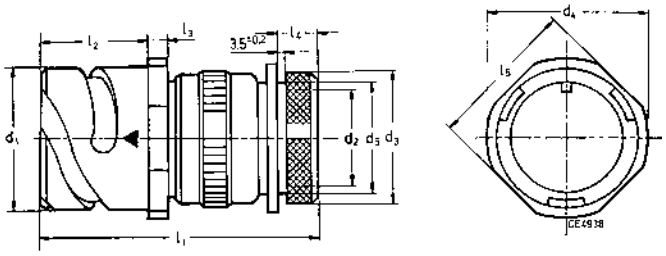

VG95234 Part no.	Cannon Part no.	d_1 -0,15	d_2[2] min.	d_3 ±0,2	d_4 max.	d_5 max.	l_1 max.	l_2 +0,4	l_3 ±0,2	l_4 ±0,5	l_5	Weight[1] g max.
VG95234V-10SL-*	CA3101E10SL-**-B-***	18,2	7,7	15,5	25,2	13,3	57	18,2	2,8	11,7	20,6	35
	CA3101E12S-**-B-***	21,4	7,9	15,5	27,8	13,3	57	18,2	3,2	11,7	23,6	45
VG95234V-14S-*	CA3101E14S-**-B-***	24,6	10,6	19,1	29,8	17,0	57	18,2	3,2	11,7	25,4	50
VG95234V-16S-*	CA3101E16S-**-B-***	27,4	13,5	23,9	32,3	21,9	57	18,2	3,2	11,7	28,6	60
VG95234V-16-*	CA3101E16-**-B-***	27,4	13,5	23,9	32,3	21,9	63	23,05	3,2	11,5	28,6	65
VG95234V-18-*	CA3101E18-**-B-***	30,8	14,6	23,9	34,8	21,9	65	23,05	4,0	11,5	31,7	80
VG95234V-20-*	CA3101E20-**-B-***	34,2	18,7	29,6	37,8	26,2	68	23,05	4,0	12,7	34,9	95
VG95234V-22-*	CA3101E22-**-B-***	37,4	20,8	29,6	41,1	26,2	68	23,05	4,0	12,7	38,1	105
VG95234V-24-*	CA3101E24-**-B-***	40,9	24,6	37,8	44,6	34,5	70	23,05	4,0	12,7	41,3	140
VG95234V-28-*	CA3101E28-**-B-***	46,7	27,0	37,8	50,9	34,5	71	24,05	4,0	12,7	47,6	160
VG95234V-32-*	CA3101E32-**-B-***	53,4	33,3	47,8	57,1	43,6	74	24,05	4,0	15,2	54,0	205
VG95234V-36-*	CA3101E36-**-B-***	59,6	38,5	47,8	63,6	43,6	74	24,05	4,0	15,2	60,6	270

[1] Weight without insulator, grommets and contacts. [2] For max. cable entry.

Dimensions shown in mm
Specifications and dimensions subject to change

Wall Mounting Receptacle, 90˚, with cable clamp

CA3100E-B-08, additional modifications on page 12.
Description: Wall mounting receptacle, with 90° endbell, cable clamp and telescoping bushing, flange with threaded holes.

CA3100E-B-09, additional modifications on page 12.
Description: Wall mounting receptacle, with 90° endbell, cable clamp and telescoping bushing, flange with through holes.

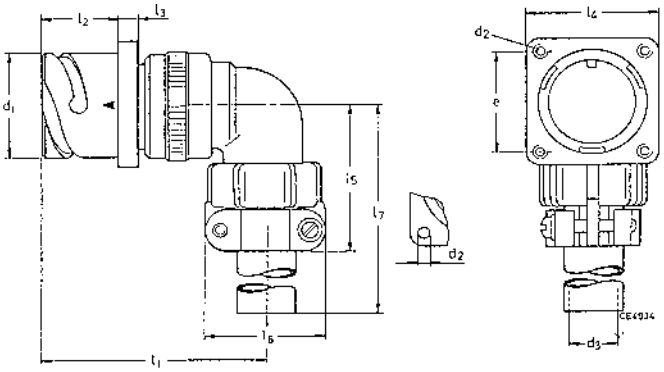

Cannon Part no.	d_1 -0,15	d_2 Thread	Ø H13*	d_3 2) max.	e ±0,4	l_1 max.	l_2 +0,4	l_3 ±0,2	l_4 max.	l_5 max.	l_6 max.	l_7 max.	Weight 1) g max.
CA3100E10SL-**-B-***	18,2	M4	3,2	6,5	18,2	50	18,2	2,8	25,4	42	22,7	100	50
CA3100E12S-**-B-***	21,4	M4	3,2	6,5	20,6	50	18,2	3,2	28,0	42	22,7	100	60
CA3100E14S-**-B-***	24,6	M4	3,2	9,0	23,0	52	18,2	3,2	30,0	42	27,5	100	70
CA3100E16S-**-B-***	27,4	M4	3,2	11,0	24,6	53	18,2	3,2	32,5	45	30,0	100	80
CA3100E16-**-B-***	27,4	M4	3,2	11,0	24,6	60	23,05	3,2	32,5	45	30,0	100	90
CA3100E18-**-B-***	30,8	M4	3,2	14,2	27,0	62	23,05	4,0	35,0	53	33,0	100	100
CA3100E20-**-B-***	34,2	M4	3,2	15,8	29,4	66	23,05	4,0	38,0	53	37,5	100	120
CA3100E22-**-B-***	37,4	M4	3,2	15,8	31,8	66	23,05	4,0	41,0	53	37,5	100	130
CA3100E24-**-B-***	40,9	M4	3,7	21,4	34,9	69	23,05	4,0	44,5	58	43,3	100	170
CA3100E28-**-B-***	46,7	M5	3,7	21,4	39,7	70	24,05	4,0	50,8	58	43,3	100	200
CA3100E32-**-B-***	53,4	M5	4,3	26,7	44,5	74	24,05	4,0	57,0	66	51,7	110	265
CA3100E36-**-B-***	59,6	M5	4,3	31,7	49,2	78	24,05	4,0	63,5	69	58,0	110	325

1) Weight without insulator, grommets and contacts. 2) For max. cable entry.
*Drilling tolerances according to DIN ISO 286

Wall Mounting Receptacle, 90˚, for flex tube

CA3100F-B-08, additional modifications on page 12.
Description: Wall mounting receptacle, with 90° endbell for flex tube. Flange with threaded holes

CA3100F-B-09, additional modifications on page 12.
Description: Wall mounting receptacle, with 90° endbell for flex tube. Flange with through holes.

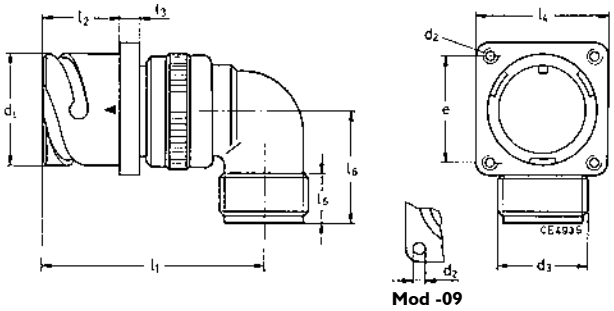

Cannon Part no.	d_1 -0,15	d_2 Thread	Ø H13*	d_3 Thread	e ±0,1	l_1 max.	l_2 +0,4	l_3 ±0,2	l_4 ±0,3	l_5 min.	l_6 max.	Weight 1) g max.
CA3100F10SL-**-B-***	18,2	M4	3,2	5/8-24UNEF-2A	18,2	50	18,2	2,8	25,4	9,4	30	47
CA3100F12S-**-B-***	21,4	M4	3,2	5/8-24UNEF-2A	20,6	50	18,2	3,2	28,0	9,4	30	57
CA3100F14S-**-B-***	24,6	M4	3,2	3/4-20UNEF-2A	23,0	52	18,2	3,2	30,0	9,4	30	57
CA3100F16S-**-B-***	27,4	M4	3,2	7/8-20UNEF-2A	24,6	53	18,2	3,2	32,5	9,4	30	75
CA3100F16-**-B-***	27,4	M4	3,2	7/8-20UNEF-2A	24,6	60	23,05	3,2	32,5	9,4	30	85
CA3100F18-**-B-***	30,8	M4	3,2	1-20UNEF-2A	27,0	62	23,05	4,0	35,0	9,4	35	95
CA3100F20-**-B-***	34,2	M4	3,2	1 3/16-18UNEF-2A	29,4	66	23,05	4,0	38,0	9,4	35	115
CA3100F22-**-B-***	37,4	M4	3,2	1 3/16-18UNEF-2A	31,8	66	23,05	4,0	41,0	9,4	35	125
CA3100F24-**-B-***	40,9	M4	3,7	1 7/16-18UNEF-2A	34,9	69	23,05	4,0	44,5	9,4	40	160
CA3100F28-**-B-***	46,7	M5	3,7	1 7/16-18UNEF-2A	39,7	70	24,05	4,0	50,8	9,4	40	190
CA3100F32-**-B-***	53,4	M5	4,3	1 3/4-18UNS-2A	44,5	74	24,05	4,0	57,0	11,0	45	250
CA3100F36-**-B-***	59,6	M5	4,3	2-18UNS-2A	49,2	78	24,05	4,0	63,5	12,6	50	310

1) Weight without insulator, grommets and contacts.
*Drilling tolerances according to DIN ISO 286.

Dimensions shown in mm
Specifications and dimensions subject to change

ITT
ENGINEERED FOR LIFE

Wall Mounting Receptacle with short endbell

CA3100R-B, additional modifications on page 12.
Description: Wall mounting receptacle with short endbell without cable clamp. Flange with threaded holes, for rear mounting.

CA3100R-B, additional modifications on page 12.
Description: Wall mounting receptacle with short endbell without cable clamp. Flange with through holes, for rear mounting.

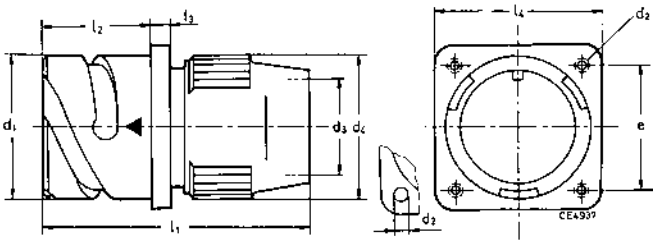

Mod -05

Cannon Part no.	d_1 -0,15	d_2 Thread	H13	d_3[2] max.	d_4 max.	e ±0,1	l_1 max.	l_2 +,0,4	l_3 ±0,2	l_4 ±0,3	Weight[1] g max.
CA3100R10SL-**-B-***	18,2	M4	3,2	9,6	22,0	18,2	50	18,2	2,8	25,4	40
CA3100R12S-**-B-***	21,4	M4	3,2	10,3	23,0	20,6	52	18,2	3,2	28,0	50
CA3100R14S-**-B-***	24,6	M4	3,2	12,4	27,0	23,0	52	18,2	3,2	30,0	60
CA3100R16S-**-B-***	27,4	M4	3,2	15,4	28,0	24,6	58	18,2	3,2	32,5	70
CA3100R16-**-B-***	27,4	M4	3,2	15,4	28,0	24,6	58	23,05	3,2	32,5	75
CA3100R18-**-B-***	30,8	M4	3,2	18,4	31,0	27,0	65	23,05	4,0	35,0	90
CA3100R20-**-B-***	34,2	M4	3,2	22,0	35,0	29,4	65	23,05	4,0	38,0	110
CA3100R22-**-B-***	37,4	M4	3,2	24,7	38,0	31,8	65	23,05	4,0	41,0	125
CA3100R24-**-B-***	40,9	M4	3,7	27,6	42,0	34,9	67	23,05	4,0	44,5	160
CA3100R28-**-B-***	46,7	M5	3,7	31,6	49,0	39,7	67	24,05	4,0	50,8	190
CA3100R32-**-B-***	53,4	M5	4,3	38,5	55,0	44,5	67	24,05	4,0	57,0	230
CA3100R36-**-B-***	59,6	M5	4,3	44,5	62,0	49,2	67	24,05	4,0	63,5	300

[1] Weight without insulator, grommets and contacts. [2] For max. cable entry.
*Drilling tolerances according to DIN ISO 286.

Cable Connection Receptacle for flex tube

CA3101F-B, additional modifications on page 12.
Description: Cable connection receptacle for flex tube.

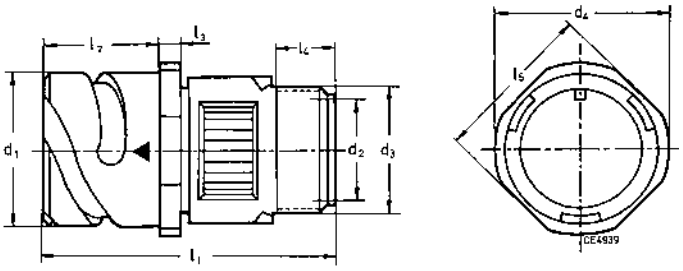

Cannon Part no.	d_1 -0,15	d_2[2] min.	d_3 Thread	d_4 max.	l_1 max.	l_2 +0,4	l_3 ±0,2	l_4 min.	l_5 ±0,2	Weight[1] g max.
CA3101F10SL-**-B-***	18,2	8,2	5/8-24NEF-2A	25,2	52	18,2	2,8	9,5	20,6	35
CA3101F12S-**-B-***	21,4	8,2	5/8-24NEF-2A	27,8	52	18,2	3,2	9,5	23,6	45
CA3101F14S-**-B-***	24,6	11,1	3/4-20UNEF-2A	29,8	52	18,2	3,2	9,5	25,4	50
CA3101F16S-**-B-***	27,4	14,3	7/8-20UNEF-2A	32,3	59	18,2	3,2	9,5	28,6	60
CA3101F16-**-B-***	27,4	14,3	7/8-20UNEF-2A	32,3	59	23,05	3,2	9,5	28,6	65
CA3101F18-**-B-***	30,8	16,7	1-20UNEF-2A	34,8	63	23,05	4,0	9,5	31,7	80
CA3101F20-**-B-***	34,2	19,8	1 3/16-18UNEF-2A	37,8	63	23,05	4,0	9,5	34,9	95
CA3101F22-**-B-***	37,4	19,8	1 3/16-18UNEF-2A	41,1	66	23,05	4,0	9,5	38,1	105
CA3101F24-**-B-***	40,9	25,4	1 7/16-18UNEF-2A	44,6	69	23,05	4,0	9,5	41,3	140
CA3101F28-**-B-***	46,7	27,0	1 7/16-18UNEF-2A	50,9	70	24,05	4,0	9,5	47,6	160
CA3101F32-**-B-***	53,4	32,5	1 3/4-18UNS-2A	57,1	71	24,05	4,0	11,0	54,0	205
CA3101F36-**-B-***	59,6	35,7	2-18UNS-2A	63,6	73	24,05	4,0	11,8	60,6	270

[1] Weight without insulator, grommets and contacts. [2] For max. cable entry.

Dimensions shown in mm
Specifications and dimensions subject to change

Wall Mounting Receptacle for flex tube

CA3100F-B, additional modifications on page 12.
Description: Wall mounting receptacle with straight endbell for flex tube. Flange with threaded holes, for rear mounting.

CA3100F-B-05, additional modifications on page 12.
Description: Wall mounting receptacle with straight endbell for flex tube. Flange with through holes, for rear mounting.

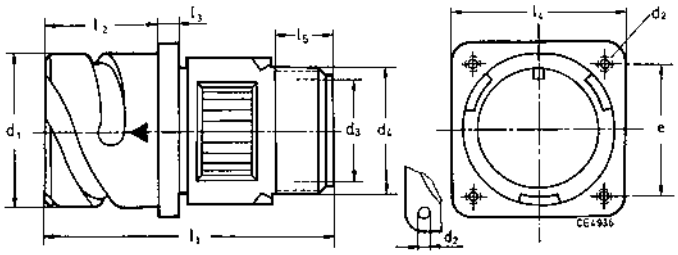

Mod -05

Cannon Part no.	d_1 -0,15	d_2 Thread	Ø H13*	d_3[2]	d_4 Thread	e ±0,1	l_1 max.	l_2 +0,4	l_3 ±0,2	l_4 ±0,3	l_5 min.	Weight[1] g max.
CA3100F10SL-**-B-***	18,2	M4	3,2	8,2	5/8-24NEF-2A	18,2	52	18,2	2,8	25,4	9,5	40
CA3100F12S-**-B-***	21,4	M4	3,2	8,2	5/8-24NEF-2A	20,6	52	18,2	3,2	28,0	9,5	50
CA3100F14S-**-B-***	24,5	M4	3,2	11,1	3/4-20UNEF-2A	23,0	52	18,2	3,2	30,0	9,5	60
CA3100F16S-**-B-***	27,4	M4	3,2	14,3	7/8-20UNEF-2A	24,6	59	18,2	3,2	32,5	9,5	70
CA3100F16-**-B-***	27,4	M4	3,2	14,3	7/8-20UNEF-2A	24,6	59	23,05	3,2	32,5	9,5	75
CA3100F18-**-B-***	30,8	M4	3,2	16,7	1-20UNEF-2A	27,0	63	23,05	4,0	35,0	9,5	90
CA3100F20-**-B-***	34,2	M4	3,2	19,8	1 3/16-18UNEF-2A	29,4	63	23,05	4,0	38,0	9,5	110
CA3100F22-**-B-***	37,4	M4	3,2	19,8	1 3/16-18UNEF-2A	31,8	66	23,05	4,0	42,0	9,5	125
CA3100F24-**-B-***	40,9	M4	3,7	25,4	1 7/16-18UNEF-2A	34,9	69	23,05	4,0	44,5	9,5	160
CA3100F28-**-B-***	46,7	M5	3,7	27,0	1 7/16-18UNEF-2A	39,7	70	24,05	4,0	50,8	9,5	190
CA3100F32-**-B-***	53,4	M5	4,3	32,5	1 3/4-18UNS-2A	44,5	71	24,05	4,0	57,0	11,0	230
CA3100F36-**-B-***	59,6	M5	4,3	35,7	2-18UNS-2A	49,2	73	24,05	4,0	63,5	11,8	300

[1] Weight without insulator, grommets and contacts. [2] For max. cable entry.
*Drilling tolerances according to DIN ISO 286.

Dimensions shown in mm
Specifications and dimensions subject to change

ITT
ENGINEERED FOR LIFE

Cable Connection Receptacle with short endbell

CA3101R-B, additional modifications on page 12.
Description: Cable connection receptacle with short endbell, without cable clamp.

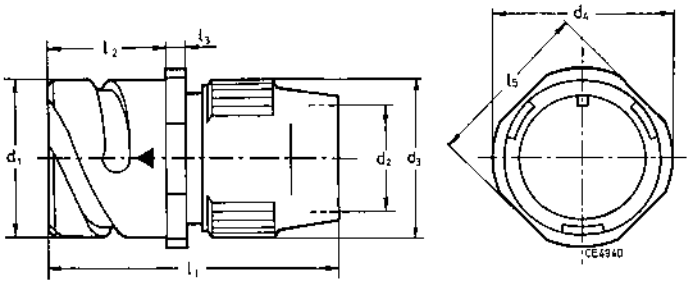

Cannon Part no.	d_1 -0,15	d_2 min.	d_3 max.	d_4 max.	l_1 max.	l_2 +,0,4	l_3 ±0,2	l_5 ±0,2	Weight[1] g max.
CA3101R10SL-**-B-***	18,2	9,6	22,0	25,2	50	18,2	2,8	20,6	32
CA3101R12S-**-B-***	21,4	10,3	23,0	27,8	52	18,2	3,2	23,6	40
CA3101R14S-**-B-***	24,6	12,4	27,0	29,8	52	18,2	3,2	25,4	47
CA3101R16S-**-B-***	27,4	15,4	28,0	32,3	58	18,2	3,2	28,6	55
CA3101R16-**-B-***	27,4	15,4	28,0	32,3	58	23,05	3,2	28,6	60
CA3101R18-**-B-***	30,8	18,4	31,0	34,8	65	23,05	4,0	31,7	75
CA3101R20-**-B-***	34,2	22,0	35,0	37,8	65	23,05	4,0	34,9	90
CA3101R22-**-B-***	37,4	24,7	38,0	41,1	65	23,05	4,0	38,1	100
CA3101R24-**-B-***	40,9	27,6	42,0	44,6	67	23,05	4,0	41,3	135
CA3101R28-**-B-***	46,7	31,6	49,0	50,9	67	24,05	4,0	47,6	155
CA3101R32-**-B-***	53,4	38,5	55,0	57,1	67	24,05	4,0	54,0	200
CA3101R36-**-B-***	59,6	44,5	62,0	63,6	67	24,05	4,0	60,6	260

[1] Weight without insulator, grommets and contacts.

Straight Plug with short endbell

CA3106R-B, additional modifications on page 12.
Description: Straight plug with short endbell, without cable clamp.

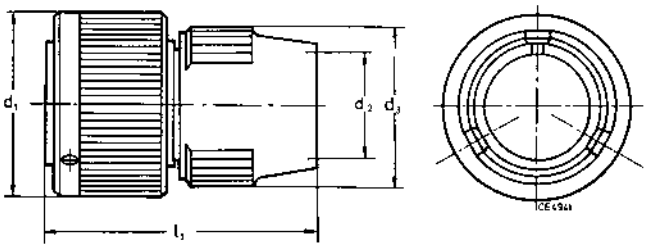

Cannon Part no.	d_1 max.	d_2[1]	d_3 max.	l_1 max.	Weight[1] g max.
CA3106R10SL-**-B-***	22,8	9,6	22,0	50	27
CA3106R12S-**-B-***	26,0	10,3	23,0	50	35
CA3106R14S-**-B-***	29,2	12,4	27,0	50	40
CA3106R16S-**-B-***	32,0	15,4	28,0	50	50
CA3106R16-**-B-***	32,0	15,4	28,0	60	57
CA3106R18-**-B-***	36,5	18,4	31,0	62	65
CA3106R20-**-B-***	39,9	22,0	35,0	62	80
CA3106R22-**-B-***	43,1	24,7	38,0	62	87
CA3106R24-**-B-***	46,6	27,6	42,0	62	120
CA3100R28-**-B-***	53,4	31,6	49,0	62	150
CA3106R32-**-B-***	60,1	38,5	55,0	62	190
CA3106R36-**-B-***	66,3	44,5	62,0	62	250

[1] Weight without insulator, grommets and contacts.

Jam Nut Receptacle

CA07A-B, additional modifications on page 12.
Description: Jam nut receptacle with locking hex nut.

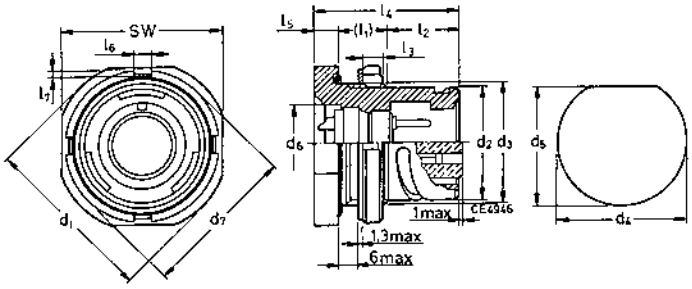

Cannon Part no.	d_1	d_2	d_3 Thread	(l_1)	l_2	l_3	l_4	d_4	d_5	d_6	d_7	sw	d_8	l_5	l_6	l_7
CA07A10SL-**B-***	35,0	18,2	7/8-20UNEF-2A	13,5	12,5	4,0	29,2	22,7	20,9	13,5	31,5	31,8	20,6	3,2	5,0	2,5
CA07A14S-**B-***	41,3	24,6	1 1/8-18UNEF-2A	13,5	12,5	4,0	29,2	28,8	27,2	17,9	37,9	38,1	26,9	3,2	6,0	2,5
CA07A16S-**B-***	44,4	27,4	1 1/4-18UNEF-2A	13,5	12,5	4,0	29,2	32,0	30,4	21,1	41,0	41,2	30,1	3,2	6,0	2,5
CA07A16-**B-***	44,4	27,4	1 1/4-18UNEF-2A	13,5	21,0	4,0	37,7	32,0	30,4	21,1	41,0	41,2	30,1	3,2	6,0	2,5
CA07A18-**B-***	48,2	30,8	1 3/8-18UNEF-2A	15,0	21,0	5,0	40,0	35,1	33,6	24,2	44,8	45,0	33,3	4,0	7,0	3,0
CA07A20-**B-***	52,4	34,2	1 1/2-18UNEF-2A	15,0	21,0	5,0	40,0	38,2	36,8	28,2	49,0	49,2	36,5	4,0	7,0	3,0
CA07A22-**B-***	55,5	37,4	1 5/8-18UNEF-2A	15,0	21,0	5,0	40,0	42,0	39,9	31,4	52,2	52,4	39,6	4,0	7,0	3,0
CA07A24-**B-***	59,0	40,9	1 3/4-18UNEF-2A	15,0	21,0	5,0	40,0	44,7	43,1	34,5	55,0	55,2	41,2	4,0	7,0	3,0
CA07A28-**B-***	66,0	46,7	2-18UNEF-2A	15,0	21,0	5,0	40,0	51,1	49,2	40,1	62,0	62,2	47,5	4,0	7,0	3,0
CA07A32-**B-***	72,0	53,4	2 1/4-16UN-2A	15,0	21,0	5,0	40,0	57,4	55,7	46,5	68,0	68,2	54,1	4,0	7,0	3,0
CA07A36-**B-***	80,0	59,6	2 1/2-16UN2A	15,0	21,0	5,0	40,0	63,8	62,0	51,2	75,0	75,2	60,5	4,0	8,0	3,0

Straight Plug with PG or Metric Adapter

CA06PG-B , additional modifications on page 12.
Description: Straight plug with adapter for PG Gland nut
Gland nut is not included.

CA06ME-B , additional modifications on page 12.
Description: Straight plug with adapter for ME Gland nut
Gland nut is not included.

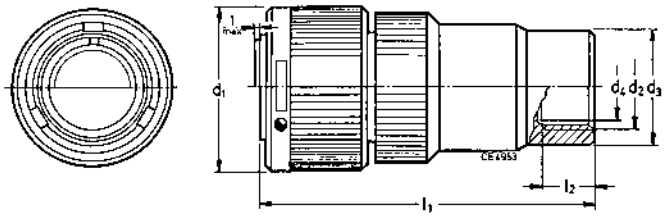

Cannon Part no.	d_1	d_3	l_1	l_2	d_2 PG-Thread
CA06PG10SL-**-B-***	22,8	18,0	52	7,0	PG 9
CA06PG12S-**-B-***	26,0	18,8	52	7,0	PG 9
CA06PG14S-**-B-***	29,2	22,0	52	7,0	PG11
CA06PG16S-**-B-***	32,0	23,6	54	7,0	PG13,5
CA06PG16-**-B-***	32,0	24,0	64	7,0	PG13,5
CA06PG18-**-B-***	36,5	24,4	69	7,5	PG13,5
CA06PG20-**-B-***	39,9	26,8	70	7,5	PG16
CA06PG22-**-B-***	42,1	26,4	73	7,5	PG16
CA06PG24-**-B-***	46,6	26,8	74	7,5	PG16
CA06PG28-**-B-***	53,4	32,0	74	7,5	PG21
CA06PG32-**-B-***	60,1	40,8	76	8,5	PG29
CA06PG36-**-B-***	66,3	40,8	87	9,0	PG29

Cannon Part no.	d_1	d_3	l_1	l_2	d_2 Metric
CA06ME10SL-**-B-***	22,8	21.5	57	7	M16X1,5
CA06ME12S-**-B-***	25,8	22.5	57	7	M16X1,5
CA06ME14S-**-B-***	29,2	25	57	7	M20X1,5
CA06ME16S-**-B-***	32	26.5	57	7	M20X1,5
CA06ME16-**-B-***	32	26.5	77	7	M20X1,5
CA06ME18-**-B-***	36,5	31	77	7.5	M25X1,5
CA06ME20-**-B-***	39,9	34	77	7.5	M25X1,5
CA06ME22-**-B-***	43,1	40	82	7.5	M32X1,5
CA06ME24-**-B-***	46,6	40	83	7.5	M32X1,5
CA06ME28-**-B-***	53,4	41	83	7.5	M32X1,5
CA06ME32-**-B-***	60,1	48.5	90	8.5	M40X1,5
CA06ME36-**-B-***	66,3	48.5	90	9	M40X1,5

Dimensions shown in mm
Specifications and dimensions subject to change

ITT
ENGINEERED FOR LIFE

Wall Mounting Receptacle with PG or Metric Adapter

CA00PG-B, additional modifications on page 12.
Description: Wall mounting receptacle with adapter for PG Gland nut
Gland nut is not included.

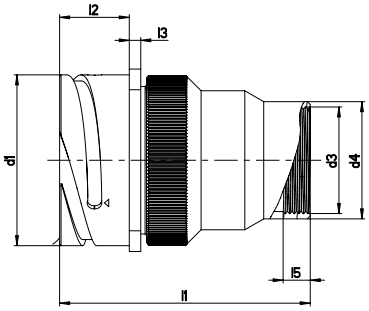

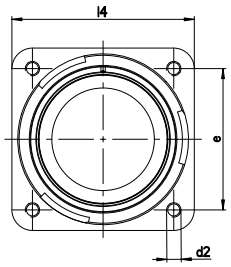

Cannon Part no.	d_1 -0,15	d_2 Thread	d_2 Ø H13	d_3 PG-Thread	d_4	e ±0,1	l_1 max	l_2 +0,4	l_3 ±0,2	l_4 ±0,3	l_5 min.
CA00PG10SL-**-B-***	18,2	M4	3,2	PG9	18,0	18,2	56	18,2	2,8	25,4	8
CA00PG12S-**-B-***	21,4	M4	3,2	PG9	18,8	20,6	56	18,2	3,2	28,0	8
CA00PG14S-**-B-***	24,6	M4	3,2	PG11	22,0	23,0	56	18,2	3,2	30,0	8
CA00PG16S-**-B-***	27,4	M4	3,2	PG13,5	23,6	24,6	58	18,2	3,2	32,5	8
CA00PG16-**-B-***	27,4	M4	3,2	PG13,5	24,0	24,6	66	21,5	3,2	32,5	8
CA00PG18-**-B-***	30,8	M4	3,2	PG13,5	24,4	27,0	73	23,05	4,0	35,0	8
CA00PG20-**-B-***	34,2	M4	3,2	PG16	26,8	29,4	74	23,05	4,0	38,0	8
CA00PG22-**-B-***	37,4	M4	3,2	PG16	26,4	31,8	77	23,05	4,0	41,0	8
CA00PG24-**-B-***	40,9	M4	3,7	PG16	26,8	34,9	77	23,05	4,0	44,5	8
CA00PG28-**-B-***	46,7	M5	3,7	PG21	32,0	39,7	78	24,05	4,0	50,8	9
CA00PG32-**-B-***	53,4	M5	4,3	PG29	40,8	44,5	78	24,05	4,0	57,0	9
CA00PG36-**-B-***	59,6	M5	4,3	PG29	40,8	49,2	89	24,05	4,0	63,5	9

CA00ME-B, additional modifications on page 12.
Description: Wall mounting receptacle with adapter for ME Gland nut
Gland nut is not included.

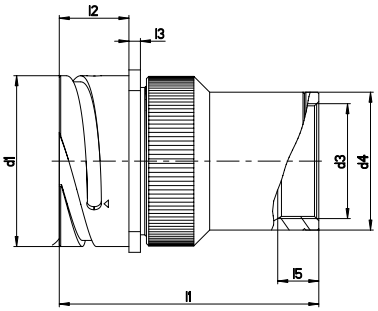

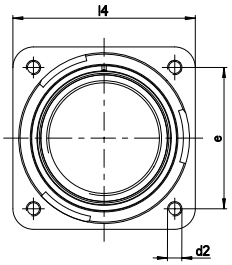

Cannon Part no.	d_1 -0,15	d_2 Thread	d_2 Ø H13	d_3 Metric	d_4 max	e ±0,1	l_1 max	l_2 +0,4	l_3 ±0,2	l_4 ±0,3	l_5 min.
CA00ME10SL-**-B-***	18,2	M4	3,2	M16X1,5	21,5	18,2	60	18,2	2,8	25,4	10
CA00ME12S-**-B-***	21,4	M4	3,2	M16X1,5	22,5	20,6	60	18,2	3,2	28,0	10
CA00ME14S-**-B-***	24,6	M4	3,2	M20X1,5	25,0	23,0	60	18,2	3,2	30,0	11
CA00ME16S-**-B-***	27,4	M4	3,2	M20X1,5	26,5	24,6	60	18,2	3,2	32,5	11
CA00ME16-**-B-***	27,4	M4	3,2	M20X1,5	26,5	24,6	79	21,5	3,2	32,5	11
CA00ME18-**-B-***	30,8	M4	3,2	M25X1,5	31,0	27,0	81	23,05	4,0	35,0	11
CA00ME20-**-B-***	34,2	M4	3,2	M25X1,5	34,0	29,4	81	23,05	4,0	38,0	11
CA00ME22-**-B-***	37,4	M4	3,2	M32X1,5	40,5	31,8	86	23,05	4,0	41,0	12
CA00ME24-**-B-***	40,9	M4	3,7	M32X1,5	40,5	34,9	86	23,05	4,0	44,5	12
CA00ME28-**-B-***	46,7	M5	3,7	M32X1,5	41,0	39,7	87	24,05	4,0	50,8	12
CA00ME32-**-B-***	53,4	M5	4,3	M40X1,5	48,5	44,5	92	24,05	4,0	57,0	12
CA00ME36-**-B-***	59,6	M5	4,3	M40X1,5	48,5	49,2	92	24,05	4,0	63,5	12

Cable Connection Receptacle with PG or Metric Adapter

CA01PG-B, additional modifications on page 12.
Description: Cable connection receptacle with adapter for PG Gland nut
Gland nut is not included.

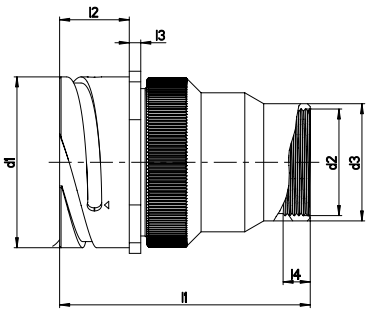

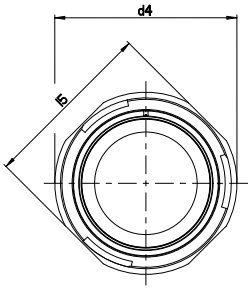

Cannon Part no.	d_1 -0,15	d_2 PG-Thread	d_3	d_4 max	l_1 max	l_2 +0,4	l_3 ±0,2	l_4 min.	l_5 ±0,2
CA01PG10SL-**-B-***	18,2	PG9	18,0	25,2	56	18,2	2,8	8	20,6
CA01PG12S-**-B-***	21,4	PG9	18,8	27,8	56	18,2	3,2	8	23,8
CA01PG14S-**-B-***	24,6	PG11	22,0	29,8	56	18,2	3,2	8	25,4
CA01PG16S-**-B-***	27,4	PG13,5	23,6	32,3	58	18,2	3,2	8	28,6
CA01PG16-**-B-***	27,4	PG13,5	24,0	32,3	66	21,5	3,2	8	28,6
CA01PG18-**-B-***	30,8	PG13,5	24,4	34,8	73	23,05	4,0	8	31,7
CA01PG20-**-B-***	34,2	PG16	26,8	37,8	74	23,05	4,0	8	34,9
CA01PG22-**-B-***	37,4	PG16	26,4	41,1	77	23,05	4,0	8	38,1
CA01PG24-**-B-***	40,9	PG16	26,8	44,6	77	23,05	4,0	8	41,3
CA01PG28-**-B-***	46,7	PG21	32,0	50,9	78	24,05	4,0	9	47,6
CA01PG32-**-B-***	53,4	PG29	40,8	57,1	78	24,05	4,0	9	54,0
CA01PG36-**-B-***	59,6	PG29	40,8	63,6	89	24,05	4,0	9	60,6

CA01ME-B, additional modifications on page 12.
Description: Cable connection receptacle with adapter for ME Gland nut
Gland nut is not included.

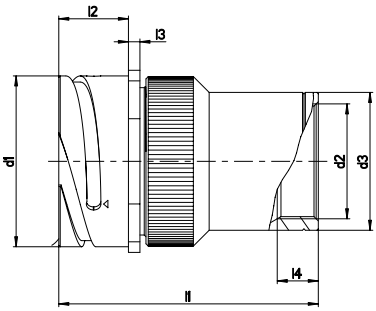

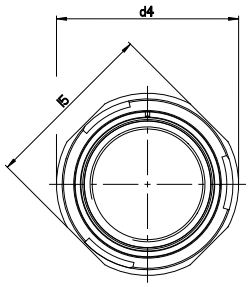

Cannon Part no.	d_1 -0,15	d_2 Metric	d_3 max	d_4 max	l_1 max	l_2 +0,4	l_3 ±0,2	l_4 min.	l_5 ±0,2
CA01ME10SL-**-B-***	18,2	M16X1,5	21,5	25,2	60	18,2	2,8	10	20,6
CA01ME12S-**-B-***	21,4	M16X1,5	22,5	27,8	60	18,2	3,2	10	23,8
CA01ME14S-**-B-***	24,6	M20X1,5	25,0	29,8	60	18,2	3,2	11	25,4
CA01ME16S-**-B-***	27,4	M20X1,5	26,5	32,3	60	18,2	3,2	11	28,6
CA01ME16-**-B-***	27,4	M20X1,5	26,5	32,3	79	21,5	3,2	11	28,6
CA01ME18-**-B-***	30,8	M25X1,5	31,0	34,8	81	23,05	4,0	11	31,7
CA01ME20-**-B-***	34,2	M25X1,5	34,0	37,8	81	23,05	4,0	11	34,9
CA01ME22-**-B-***	37,4	M32X1,5	40,0	41,1	86	23,05	4,0	12	38,1
CA01ME24-**-B-***	40,9	M32X1,5	40,0	44,6	86	23,05	4,0	12	41,3
CA01ME28-**-B-***	46,7	M32X1,5	41,0	50,9	87	24,05	4,0	12	47.6
CA01ME32-**-B-***	53,4	M40X1,5	48,5	57,1	92	24,05	4,0	12	54,0
CA01ME36-**-B-***	59,6	M40X1,5	48,5	63,6	92	24,05	4,0	12	60.6

Dimensions shown in mm
Specifications and dimensions subject to change

ITT
ENGINEERED FOR LIFE

Coupling Dimensions

For connector style A, B1, B2, C1, C2, F, J1, J2, N1 and N2 resp. CA3100, CA3101, CA3102 and TBF.
A = Contact size 10. B = Contact size 15S, 15, 16S, 16. C = Contact size 25, 12. D = Contact size 60, 100, 160, 500, 8, 4, 0. E = Contact size 10F = Contact size 15S, 16S. G = all others.

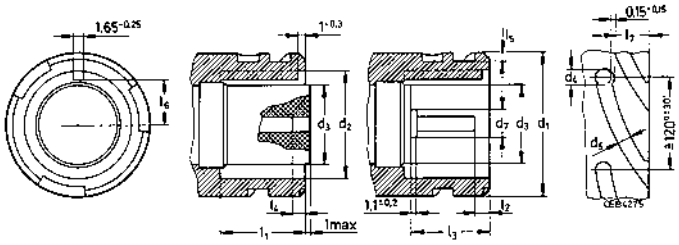

Shell Size	d_1 -0,15	d_2 +0,3	d_3	d_4 +0,4	d_5 +0,8	l_1 min.	±1 A-1	B±1	l_2 C±1	D	l_3 ±0,5	±1 E	l_4 F	G	+0,2	l_5 +0,4	l_6 l_7 +0,1 -0,005
10SL	18,2	11,4	$9,7^{+0,25}_{-0,3}$	2,75	2,75	14,2	–	2,2	–	–	12,8	–	2	–	1,8	4,4	6,3
12S	21,4	14,2	$10,8^{+0,25}_{-0,3}$	2,75	2,75	14,2	–	2,2	–	–	12,8	–	2	–	1,8	5,9	6,3
14S	24,6	17,3	$13,0^{+0,25}_{-0,3}$	2,75	2,75	14,2	–	2,2	–	–	12,8	–	2	–	1,8	6,9	6,3
16S	27,4	20,6	$16,1^{+0,25}_{-0,3}$	2,75	2,75	14,2	–	2,2	–	–	12,8	–	2	–	1,8	8,4	6,3
16	27,4	20,6	$16,1^{+0,25}_{-0,3}$	4,65	4,65	19	9,8	6,6	3	2,3	17,6	1,4	–	2,6	1,8	8,4	9,6
18	30,8	23,8	$18,8^{\pm0,4}$	4,65	4,65	19	9,8	6,6	3	2,3	17,6	1,4	–	2,6	2,0	9,7	9,6
20	34,2	26,9	$22,6^{\pm0,4}$	4,65	4,65	19	9,8	6,6	3	2,3	17,6	1,4	–	2,6	2,0	11,7	9,6
22	37,4	30,0	$25,1^{\pm0,4}$	4,65	4,65	19	9,8	6,6	3	2,3	17,6	1,4	–	2,6	2,0	12,9	9,6
24	40,9	33,2	$28,2^{\pm0,4}$	4,65	4,65	19	9,8	6,6	3	2,3	17,6	1,4	–	2,6	2,0	14,5	9,6
28	46,7	38,8	$33,6^{\pm0,4}$	4,65	4,65	19	9,8	6,6	3	2,3	17,6	1,4	–	2,6	2,0	17,3	9,6
32	53,4	45,2	$40,0^{\pm0,4}$	4,65	4,65	19	9,8	6,6	3	2,3	17,6	1,4	–	2,6	2,0	20,4	9,6
36	59,6	50,6	$45,5^{\pm0,4}$	4,65	4,65	19	9,8	6,6	3	2,3	17,6	1,4	–	2,6	2,0	23,0	9,6

Coupling Dimensions

For connector style D, E, E1, G and H resp. CA3106 and 3108.
A = Contact size 10. B = Contact size 15S, 15, 16S, 16. C = Contact size 25, 12. D = Contact size 60, 100, 160, 500, 8, 4, 0. E = Contact size 10. F = Contact size 15S, 16S. G = all others.

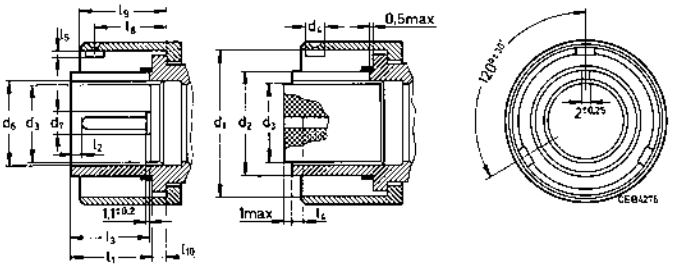

Shell Size	d_1 -0,15	d_2 -0,3	d_3	d_4 -0,1	d_6	l_1 ±0,2	±1 A	l_2 B	C	D	l_3 [1] ±0,5	±1 E	l_4 F	G	l_5 +0,05 -0,1	l_8 ±1	l_9 ±0,5	l_{10} ±0,1 -0,05
10SL	18,2	11,3	$9,7^{+0,25}_{-0,3}$	2,6	$10,0^{+0,3}$	13,5	–	2,2	–	–	12,8	–	2	–	1,6	11,8	14	2,1
12S	21,4	14,0	$10,8^{+0,25}_{-0,3}$	2,6	$11,4^{+0,6}$	13,5	–	2,2	–	–	12,8	–	2	–	1,6	11,8	14	2,1
14S	24,8	17,1	$13,0^{+0,25}_{-0,3}$	2,6	$13,3^{+0,6}$	13,5	–	2,2	–	–	12,8	–	2	–	1,6	11,8	14	2,1
16S	27,6	20,4	$16,1^{+0,25}_{-0,3}$	2,6	$16,4^{+0,6}$	13,5	–	2,2	–	–	12,8	–	2	–	1,6	11,8	14	2,1
16	27,6	20,4	$16,1^{+0,25}_{-0,3}$	4,5	$16,4^{+0,6}$	18,2	9,8	6,6	3	2,3	17,6	1,4	–	2,6	1,6	16,0	18,8	2,1
18	31,1	23,6	$18,8^{\pm0,4}$	4,5	$19,6^{+0,6}$	18,2	9,8	6,6	3	2,3	17,6	1,4	–	2,6	1,8	16,0	18,8	2,1
20	34,5	26,7	$22,6^{\pm0,4}$	4,5	$23,6^{+0,6}$	18,2	9,8	6,6	3	2,3	17,6	1,4	–	2,6	1,8	16,0	18,8	2,1
22	37,7	29,8	$25,1^{\pm0,4}$	4,5	$26,0^{+0,6}$	18,2	9,8	6,6	3	2,3	17,6	1,4	–	2,6	1,8	16,0	18,8	2,1
24	41,2	33,0	$28,2^{\pm0,4}$	4,5	$29,1^{+0,7}$	18,2	9,8	6,6	3	2,3	17,6	1,4	–	2,6	1,8	16,8	19,6	2,8
28	47,0	38,6	$33,6^{\pm0,4}$	4,5	$34,7^{+0,7}$	18,2	9,8	6,6	3	2,3	17,6	1,4	–	2,6	1,8	16,8	19,6	2,8
32	53,7	44,9	$40,0^{\pm0,4}$	4,5	$41,0^{+0,7}$	18,2	9,8	6,6	3	2,3	17,6	1,4	–	2,6	1,8	16,8	19,6	2,8
36	59,9	50,3	$45,5^{\pm0,4}$	4,5	$46,6^{+0,7}$	19	9,8	6,6	3	2,3	17,6	1,4	–	2,6	1,8	16,8	19,6	2,8

[1] In terminated condition.

Dimensions shown in mm
Specifications and dimensions subject to change

CAB IP69K

cannon

General Information

Scope

This specification describes a CA-B connector with a sealing effectiveness up to IP69K. This connector is interchangeable with the corresponding types as per MIL-C-5015 and VG95234, as they offer the same mounting dimensions and contact arrangements. These connectors are without spring washer, friction ring and grommet.

Recommended Method of Mounting

Connector shell is fixed with 4 screws on the housing. In combination with universal endbell and an o-ring between flange receptacle and wall the connector will reach IP68 sealing (1 bar, 16h) and IP69K sealing acc. to ISO20653.

Ratings & Characteristics	
Locking Device	Bayonet Coupling
Contact Type	Crimp or Solder Contacts
Electrical Characteristics	In accordance with VG95234 bayonet coupling
Environmental Characteristics	In accordance with VG95234 bayonet coupling Deviance with plating A240: 500h salt spray test with mated pair Deviance with plating A34: 48h salt spray test
Water tightness for mated connector	IP68 (1bar, 16h) and IP69K in combination with universal endbell and o-ring (flange receptacle to wall)

Normative references	
DIN EN 61984	Electrical Connector, safety requirements and tests
IEC 60068	Environmental tests
IEC 60352	Crimp connection and requirements
IEC 60512	Electrical Connector, measuring and test procedure
IEC 60529	Specification for degrees of protection provided by enclosures
VG 95373	Electromagnetic compatibility

Mechanical Characteristics

Designation	Material	Finish
Shell	Aluminium-alloy	According to order reference
Coupling Nut		
Endbell		
Cone Ring		
Clamping Nut		
Clutch Spring		
Circlip	Spring Steel	-
Contact	Copper-alloy	Silver Plated and Passivated
Clutch Ring	PPS	-
Shielding Sleeve	PA66	
Clamping Ring	PBT	
Insulator	CR-rubber	-
Sealing Ring		
Grommet		
O-ring		

Dimensions shown in mm
Specifications and dimensions subject to change

How to order

Cannon Order reference

CA	06	X	H	20	29	S	W	B	–	13-D17-A240

Series
Shell style
Class
Sealing Material
Shell Size
Contact Arrangement
Contact Type
Insulator position
Coupling Mechanism
Dash
Modification
Cable Sealing Area

Explanation

Series
CA

Shell style
01 = Cable connection receptacle
02 = Wall mounting receptacle, front panel mounting
06 = Straight plug, without spring washer, friction ring and grommet

Class
X=Environmental (IP69K)

Sealing Material
Without = CR-Sealing (cable seal: Silicone)
H= FKM sealing (cable seal: Silicone), consult factory

Shell Sizes
Available shell sizes: 10SL, 14S, 18, 20, 22, 28

Contact Arrangement
See pages 13-23

Contact Type
P= Pin, S=Socket

Coupling Mechanism
B=Bayonet

Insulator Position
See pages 13-23, no identification for normal position

Cable Sealing Area
D07 = with Universal Endbell (IP69K), straight version: #10SL, #14S, #20 (wire size 4,5 – 7,2mm)
D09 = with Universal Endbell (IP69K), straight version: #14S, #20 (wire size 6,5 - 9,3mm)
D11 = with Universal Endbell (IP69K), straight version: #14S, #18, #20 (wire size 8,0 – 10,3mm)
D13 = with Universal Endbell (IP69K), straight version: #18, #20, #22 (wire size 9,0 – 12,5mm
D14 = with Universal Endbell (IP69K), straight version: #18, #20, #22, #28 (wire size 11,5 – 14,2mm)
D17 = with Universal Endbell (IP69K), straight version: #20, #22, #28 (wire size 14,5 – 16,6mm)

Modification
13 – shielded version, solder pot contacts (for CA06 only)
14 – shielded version, metric crimp contacts (for CA06 only)
15 – shielded version, AWG crimp contacts (for CA06 only)
A176 – gold plated contact, see pages 54-55
A239 – Zinc Cobalt black plating, VG approved
A232 – Zinc cobalt black plating
A233 – Zinc cobalt green plating
A240 – Zinc Nickel blue grey plating
F0 – less contacts, contacts to be ordered separately, see page 54-59

Cable Connecting Receptacle with universal endbell

Endbell: Universal Endbell
Shielding: Yes
Sealing: IP67, IP68, IP69K in mated condition

CA01X…
Straight receptacle for cable connection with universal endbell.

Please pay attention that the diameter of the cable is within the range ØH.

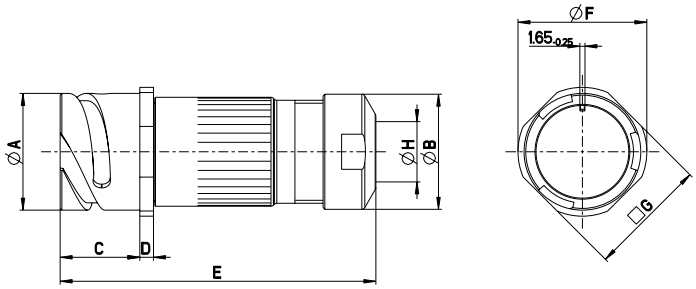

Part no.	ØA -0.15	ØB ± 0,2	C + 0,4	D ± 0,2	E max	ØF max	G ± 0,2	ØH Range min		max	
CA01X10SL-**…D07…	18.2	17.9	18.2	2.8	85	25.2	20.6	4.5	-	7.2	mm
CA01X14S-**…D07…	24.6	17.9	18.2	3.2	87	29.8	25.4	4.5	-	7.2	mm
CA01X14S-**…D09…	24.6	21.0	18.2	3.2	87	29.8	25.4	6.5	-	9.3	mm
CA01X14S-**…D11…	24.6	24.0	18.2	3.2	87	29.8	25.4	8.0	-	10.3	mm
CA01X18-**…D11…	30.8	24.0	23.05	4.0	93	34.8	31.7	8.0	-	10.3	mm
CA01X18-**…D13…	30.8	27.4	23.05	4.0	93	34.8	31.7	9.0	-	12.5	mm
CA01X18-**…D14…	30.8	30.0	23.05	4.0	93	34.8	31.7	11.5	-	14.2	mm
CA01X20-**…D07…	34.2	17.9	23.05	4.0	96	37.8	34.9	4.5	-	7.2	mm
CA01X20-**…D09…	34.2	21.0	23.05	4.0	96	37.8	34.9	6.5	-	9.3	mm
CA01X20-**…D11…	34.2	24.0	23.05	4.0	96	37.8	34.9	8.0	-	10.3	mm
CA01X20-**…D13…	34.2	27.4	23.05	4.0	96	37.8	34.9	9.0	-	12.5	mm
CA01X20-**…D17…	34.2	33.6	23.05	4.0	96	37.8	34.9	14.5	-	16.6	mm
CA01X22-**…D13…	37.4	27.4	23.05	4.0	100	41.1	38.1	9.0	-	12.5	mm
CA01X22-**…D14…	37.4	30.0	23.05	4.0	100	41.1	38.1	11.5	-	14.2	mm
CA01X22-**…D17…	37.4	33.6	23.05	4.0	100	41.1	38.1	14.5	-	16.6	mm
CA01X28-**…D17…	37.4	33.6	24.05	4.0	108	50.9	47.6	14.5	-	16.6	mm

Box Mounting Receptacle for front panel mounting

Endbell: None
Shielding: None
Sealing: IP67, IP68, IP69K in mated condition

CA02X…-B…
Box Mounting Receptacle

Front Panel Mounting with O-Ring Sealing for IP69K

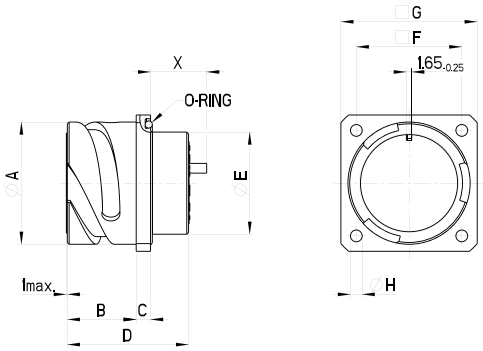

Part no.	A -0.15	B + 0,4	C ± 0,2	D ± 0,3	E max	F ± 0,1	G ± 0,3	H H13	X / Contact size 15	25	100
CA02X10SL-**-P*-B	18.2	14.2	2.8	24.7	16.2	18.2	25.4	3.2	13.6	-	-
CA02X14S-**-P*-B	24.6	14.2	3.2	24.7	19.2	23	30	3.2	13.2	-	-
CA02X18-**-P*-B	30.8	19.0	4.0	33.8	25.6	27.0	35.0	3.2	17.1	17.1	18.7
CA02X20-**-P*-B	34.2	19.0	4.0	33.8	29.0	29.4	38.0	3.2	17.1	17.1	18.7
CA02X22-**-P*-B	37.4	19	4.0	33.8	32.2	31.8	41	3.2	17.1	17.1	18.7
CA02X28-**-P*-B	46.7	20.6	4.0	33.8	41.4	39.7	50.8	3.7	15.5	15.5	17.1

Dimensions shown in mm
Specifications and dimensions subject to change

Straight Plug with universal endbell

Endbell: Universal Endbell
Shielding: Yes, with Modification Code
Sealing: IP67, IP68, IP69K in mated condition

CA06X…-B…
Straight plug with universal endbell.

Please pay attention that the diameter of the cable is within the sealing range ØD.

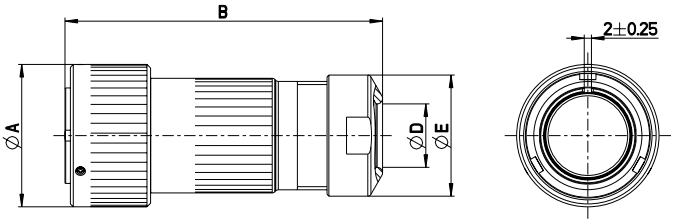

Part no.	ØA max	B max	ØE ± 0,2	ØD Sealing Range min		max	
CA06X10SL-**…D07…	22.8	82	17.9	4.5	-	7.2	mm
CA06X14S-**…D07…	29.2	82	17.9	4.5	-	7.2	mm
CA06X14S-**…D09…	29.2	82	21.0	6.5	-	9.3	mm
CA06X14S-**…D11…	29.2	82	24.0	8.0	-	10.3	mm
CA06X18-**…D11…	36.5	88	24.0	8.0	-	10.3	mm
CA06X18-**…D13…	36.5	88	27.4	9.0	-	12.5	mm
CA06X18-**…D14…	36.5	88	30.0	11.5	-	14.2	mm
CA06X20-**…D07…	39.9	92	17.9	4.5	-	7.2	mm
CA06X20-**…D09…	39.9	92	21.0	6.5	-	9.3	mm
CA06X20-**…D11…	39.9	92	24.0	8.0	-	10.3	mm
CA06X20-**…D13…	39.9	92	27.4	9.0	-	12.5	mm
CA06X20-**…D14…	39.9	92	27.4	9.0	-	12.5	mm
CA06X20-**…D17…	39.9	92	33.6	14.5	-	16.6	mm
CA06X22-**…D13…	43.1	98	27.4	9.0	-	12.5	mm
CA06X22-**…D14…	43.1	98	30.0	11.5	-	14.2	mm
CA06X22-**…D17…	43.1	98	33.6	14.5	-	16.6	mm
CA06X28-**…D14…	43.1	98	33.6	14.5	-	16.6	mm
CA06X28-**…D17…	53.4	105	33.6	14.5	-	16.6	mm

Dimensions shown in mm
Specifications and dimensions subject to change

Accessories

cannon

Plastic Protecting Caps

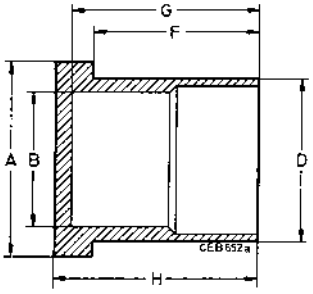

Part no.	Protecting cap for Receptacles Shell size	Plugs Shell size	Ø A max.	Ø B -0,2	Ø D +0,2	F ±0,2	G ±0,2	H max.
025-8636-005	10S/10SL	–	22,8	17,7	19,7	10,7	14,2	15,9
025-8636-006	–	10S/10SL	22,8	10,7	12,9	15,5	17,0	18,7
025-8636-008	–	12S	26,0	13,4	15,8	15,5	17,0	18,7
025-8636-010	12S/12	–	26,0	20,9	22,9	10,7	14,2	15,9
025-8636-016	14S/14	–	29,2	24,1	26,1	10,7	14,2	15,9
025-8636-017	–	14S	29,2	16,5	19,1	15,5	17,0	18,7
025-8636-018	–	14	29,2	16,5	19,1	20,2	21,7	23,4
025-8636-022	–	16S	32,0	19,8	22,4	15,5	17,0	18,7
025-8636-024	–	16	32,0	19,8	22,4	20,2	21,7	23,4
025-8636-025	16S	–	32,0	26,9	28,9	10,7	14,2	15,9
025-8636-026	16	–	32,0	26,9	28,9	17,5	19,0	20,7
025-8636-034	18	–	36,5	30,3	32,3	17,5	19,0	20,7
025-8636-036	–	18	36,5	23,0	25,6	20,2	21,7	23,4
025-8636-042	20	–	39,9	33,7	35,7	17,5	19,0	20,7
025-8636-044	–	20	39,9	26,1	28,8	20,2	21,7	23,4
025-8636-048	–	22	43,1	29,2	31,9	20,2	21,7	23,4
025-8636-049	22	–	43,1	36,9	38,9	17,5	19,0	20,7
025-8636-053	24	–	46,6	40,4	42,4	19,1	20,6	22,3
025-8636-054	–	24	46,6	32,4	35,1	20,2	21,7	23,4
025-8636-058	28	–	53,4	46,2	48,2	19,1	20,6	22,3
025-8636-060	–	28	53,4	38,0	40,7	20,2	21,7	23,4
025-8636-061	–	32	60,1	44,3	47,2	20,2	21,7	23,4
025-8636-062	32	–	64,9	52,9	54,9	20,7	22,2	23,9
025-8636-064	36	–	71,1	59,1	60,1	20,7	22,2	23,9
025-8636-065	–	36	66,3	49,7	51,6	20,2	21,7	23,4

Dimensions shown in mm
Specifications and dimensions subject to change

ITT
ENGINEERED FOR LIFE

Metal Protecting Caps for Receptacles with Cord

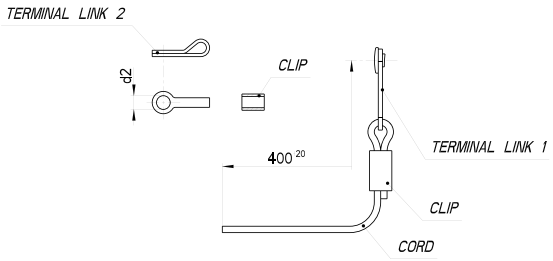

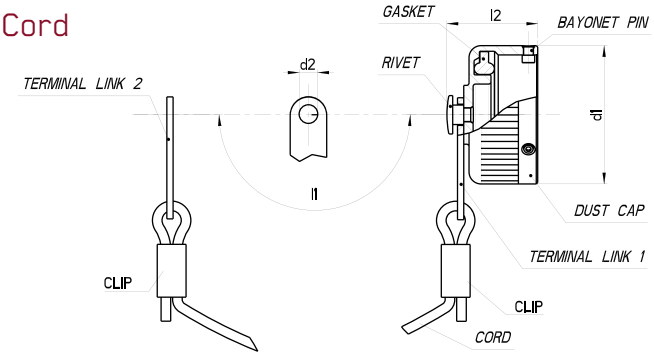

Dust caps delivered with terminal link unassembled

Shell size	VG95234*	Cannon A66	Cord length (mm)	d_2 +0,5
10SL	VG95234KA10SL	CAB81-10SL-D	400	4.3
12S	-	CAB81-12S-D	400	4.3
14S	VG95234KA14S	CAB81-14S-D	400	4.3
16S	VG95234KA16S	CAB81-16S-D	400	4.3
16	VG95234KA16	CAB81-16-D	400	4.3
18	VG95234KA18	CAB81-18-D	400	4.3
20	VG95234KA20	CAB81-20-D	400	4.3
22	VG95234KA22	CAB81-22-D	400	4.3
24	VG95234KA24	CAB81-24-D	400	4.3
28	VG95234KA28	CAB81-28-D	400	5.5
32	VG95234KA32	CAB81-32-D	400	5.5
36	VG95234KA36	CAB81-36-D	400	5.5

Dust caps delivered with terminal link assembled (cord length l_1)

A66***	A239	A240	d_1 max.	d_2 +0,5	l_1 ±10	l_2 max.
CA121003-901	CA121003-1181	CA121003-1161	23.4	4.3	100	19.5
CA121003-902	CA121003-1182	CA121003-1162	26.6	4.3	100	19.5
CA121003-903	CA121003-1183	CA121003-1163	29.8	4.3	100	19.5
CA121003-904	CA121003-1184	CA121003-1164	32.6	4.3	100	19.5
CA121003-905	CA121003-1185	CA121003-1165	32.6	4.3	113	24.5
CA121003-906	CA121003-1186	CA121003-1166	36.7	4.3	113	24.5
CA121003-907	CA121003-1187	CA121003-1167	40.1	4.3	127	24.5
CA121003-908	CA121003-1188	CA121003-1168	43.3	4.3	127	24.5
CA121003-909	CA121003-1189	CA121003-1169	46.8	4.3	127	24.5
CA121003-910	CA121003-1190	CA121003-1170	52.6	5.5	169	24.5
CA121003-911	CA121003-1191	CA121003-1171	59.3	5.5	169	24.5
CA121003-912	CA121003-1192	CA121003-1172	65.5	5.5	169	24.5

* Also available with VG approved ZnCo black plating. Add modification code -H, for example: VG95234KA10SLH.

Metal Protecting Caps for Receptacles with Chain

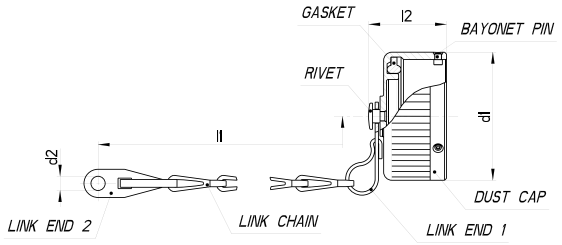

Dust caps delivered with terminal link assembled (cord length l_1)

Shell size	VG95234*	Cannon A66	A232	A233	A239	A240	d_1 max.	d_2 +0,5	l_1 ±10	l_2 max.
10SL	VG95234KR10SL	CA121003-1	CA121003-71	CA121003-121	CA121003-141	CA121003-161	23.4	4.3	100	19.5
12S	-	CA121003-2	CA121003-72	CA121003-122	CA121003-142	CA121003-162	26.6	4.3	100	19.5
14S	VG95234KR14S	CA121003-3	CA121003-73	CA121003-123	CA121003-143	CA121003-163	29.8	4.3	100	19.5
16S	VG95234KR16S	CA121003-4	CA121003-74	CA121003-124	CA121003-144	CA121003-164	32.6	4.3	100	19.5
16	VG95234KR16	CA121003-5	CA121003-75	CA121003-125	CA121003-145	CA121003-165	32.6	4.3	113	24.5
18	VG95234KR18	CA121003-6	CA121003-76	CA121003-126	CA121003-146	CA121003-166	36.7	4.3	113	24.5
20	VG95234KR20	CA121003-7	CA121003-77	CA121003-127	CA121003-147	CA121003-167	40.1	4.3	127	24.5
22	VG95234KR22	CA121003-8	CA121003-78	CA121003-128	CA121003-148	CA121003-168	43.3	4.3	127	24.5
24	VG95234KR24	CA121003-9	CA121003-79	CA121003-129	CA121003-149	CA121003-169	46.8	4.3	127	24.5
28	VG95234KR28	CA121003-10	CA121003-80	CA121003-130	CA121003-150	CA121003-170	52.6	5.5	169	24.5
32	VG95234KR32	CA121003-11	CA121003-81	CA121003-131	CA121003-151	CA121003-171	59.3	5.5	169	24.5
36	VG95234KR36	CA121003-12	CA121003-82	CA121003-132	CA121003-152	CA121003-172	65.5	5.5	169	24.5

* Also available with VG approved ZnCo black plating. Add modification code -H, for example:VG95234KR10SLH.

Dimensions shown in mm
Specifications and dimensions subject to change

Metal Protecting Caps for Plugs with Cord

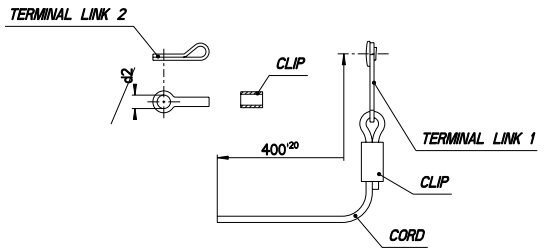

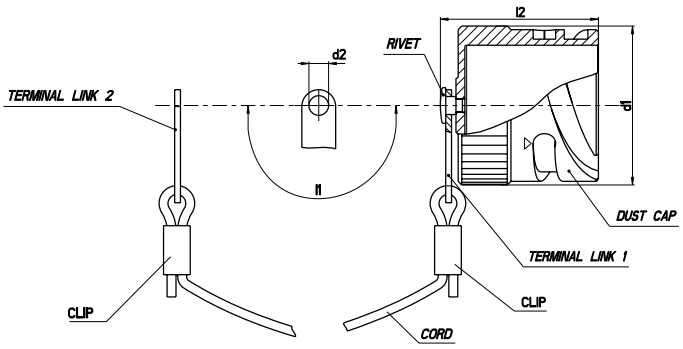

Dust caps delivered with terminal link unassembled

Shell size	VG95234*	Cannon A66	Cord length (mm)	d_2 +0,5
10SL	VG95234KC10SL	CAB80-10SL-D	400	4.3
12S	-	CAB80-12S-D	400	4.3
14S	VG95234KC14S	CAB80-14S-D	400	4.3
16S	VG95234KC16S	CAB80-16S-D	400	4.3
16	VG95234KC16	CAB80-16-D	400	4.3
18	VG95234KC18	CAB80-18-D	400	4.3
20	VG95234KC20	CAB80-20-D	400	4.7
22	VG95234KC22	CAB80-22-D	400	4.7
24	VG95234KC24	CAB80-24-D	400	4.7
28	VG95234KC28	CAB80-28-D	400	4.7
32	VG95234KC32	CAB80-32-D	400	5.5
36	VG95234KC36	CAB80-36-D	400	5.5

Dust caps delivered with terminal link assembled (cord length l_1)

A66	A239	A240***	d_1 max.	d_2 +0,5	l_1 ±10	l_2 max.
CA121004-901	CA121004-1141	CA121004-1161	20.7	4.3	100	29
CA121004-902	CA121004-1142	CA121004-1162	23.9	4.3	113	29
CA121004-903	CA121004-1143	CA121004-1163	27.1	4.3	113	29
CA121004-904	CA121004-1144	CA121004-1164	29.9	4.3	113	29
CA121004-905	CA121004-1145	CA121004-1165	29.9	4.3	127	37
CA121004-906	CA121004-1146	CA121004-1166	33.3	4.3	127	37
CA121004-907	CA121004-1147	CA121004-1167	36.7	4.7	140	37
CA121004-908	CA121004-1148	CA121004-1168	39.9	4.7	140	37
CA121004-909	CA121004-1149	CA121004-1169	43.4	4.7	140	37
CA121004-910	CA121004-1150	CA121004-1170	49.2	4.7	197	37
CA121004-911	CA121004-1151	CA121004-1171	55.9	5.5	197	37
CA121004-912	CA121004-1152	CA121004-1172	62.1	5.5	197	37

* Also available with VG approved ZnCo black plating. Add modification code -H, for example: VG95234KC10SLH.

Metal Protecting Caps for Plugs with Chain

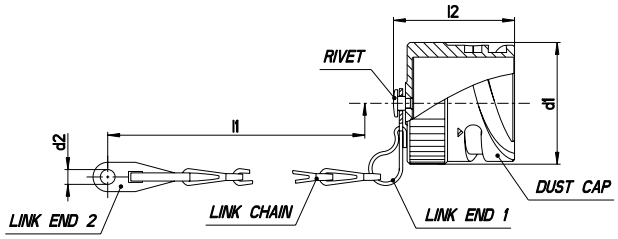

Dust caps delivered with terminal link assembled (cord length l_1)

Shell size	VG95234*	Cannon A66	A232	A233	A239	A240	d_1 max.	d_2 +0,5	l_1 ±10	l_2 max.
10SL	VG95234KB10SL	CA121004-1	CA121004-71	CA121004-121	CA121004-141	CA121004-161	20.7	4.3	100	29
12S	-	CA121004-2	CA121004-72	CA121004-122	CA1t21004-142	CA121004-162	23.9	4.3	113	29
14S	VG95234KB14S	CA121004-3	CA121004-73	CA121004-123	CA121004-143	CA121004-163	27.1	4.3	113	29
16S	VG95234KB16S	CA121004-4	CA121004-74	CA121004-124	CA121004-144	CA121004-164	29.9	4.3	113	29
16	VG95234KB16	CA121004-5	CA121004-75	CA121004-125	CA121004-145	CA121004-165	29.9	4.3	127	37
18	VG95234KB18	CA121004-6	CA121004-76	CA121004-126	CA121004-146	CA121004-166	33.3	4.3	127	37
20	VG95234KB20	CA121004-7	CA121004-77	CA121004-127	CA121004-147	CA121004-167	36.7	4.7	140	37
22	VG95234KB22	CA121004-8	CA121004-78	CA121004-128	CA121004-148	CA121004-168	39.9	4.7	140	37
24	VG95234KB24	CA121004-9	CA121004-79	CA121004-129	CA121004-149	CA121004-169	43.4	4.7	140	37
28	VG95234KB28	CA121004-10	CA121004-80	CA121004-130	CA121004-150	CA121004-170	49.2	4.7	197	37
32	VG95234KB32	CA121004-11	CA121004-81	CA121004-131	CA121004-151	CA121004-171	55.9	5.5	197	37
36	VG95234KB36	CA121004-12	CA121004-82	CA121004-132	CA121004-152	CA121004-172	62.1	5.5	197	37

* Also available with VG approved ZnCo black plating. Add modification code -H, for example:VG95234KB10SLH.

Dimensions shown in mm
Specifications and dimensions subject to change

ITT
ENGINEERED FOR LIFE

Dummy Receptacles

Front panel mounting (rear side open)
VG95234 Style BOD (Flange with through-holes)
CA3105-B

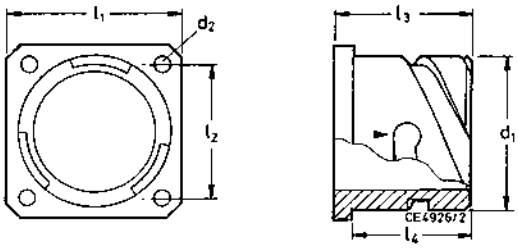

Shell size	VG95234 Part No.	Cannon Part No.	d_1 -0,15	d_2 ±0,2	l_1 ±0,3	l_2 ±0,1	l_3 max.	l_4 +0,3
10SL	VG95234BOD10SL	CA3105E10SL-B	18,2	3,2	25,4	18,2	17,5	14,2
12S		CA3105E12S-B	21,4	3,2	28,0	20,6	18,0	14,2
14S	VG95234BOD14S	CA3105E14S-B	24,6	3,2	30,0	23,0	18,0	14,2
16S	VG95234BOD16S	CA3105E16S-B	27,4	3,2	32,5	24,6	18,0	14,2
16	VG95234BOD16	CA3105E16-B	27,4	3,2	32,5	24,6	23,5	19,0
18	VG95234BOD18	CA3105E18-B	30,8	3,2	35,0	27,0	23,5	19,0
20	VG95234BOD20	CA3105E20-B	34,2	3,2	38,0	29,4	23,5	19,0
22	VG95234BOD22	CA3105E22-B	37,4	3,2	41,0	31,8	23,5	19,0
24	VG95234BOD24	CA3105E24-B	40,9	3,7	44,5	34,9	25,5	20,6
28	VG95234BOD28	CA3105E28-B	46,7	3,7	50,8	39,7	25,5	20,6
32	VG95234BOD32	CA3105E32-B	53,4	4,3	57,0	44,5	27,0	22,2
36	VG95234BOD36	CA3105E36-B	59,6	4,3	63,5	49,2	27,0	22,2

Dummy Receptacles

Rear panel mounting (rear side closed).
Available as Style A with threaded holes and Style B with through holes.

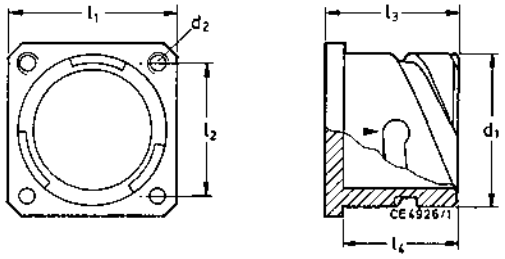

Shell size	Cannon Part no. with threaded holes Style A	Cannon Part no. with through holes Style B	d_1	l_1 ±0,25	l_2 ±0,3	l_3	l_4 +0,3	Style A d_2	Style B d_2 ±0,3
10SL	248-8513-000	248-8501-000	18,2	25,4	18,2	21,1	18,3	M4	3,2
12S	248-8514-000	248-8502-000	21,4	28,0	20,6	21,5	18,3	M4	3,2
14S	248-8515-000	248-8503-000	24,6	30,0	23,0	21,5	18,3	M4	3,2
16S	248-8516-000	248-8504-000	27,4	32,5	24,6	21,5	18,3	M4	3,2
16	248-8517-000	248-8505-000	27,4	32,5	24,6	24,8	21,6	M4	3,2
18	248-8518-000	248-8506-000	30,8	35,0	27,0	27,2	23,15	M4	3,2
20	248-8519-000	248-8507-000	34,2	38,0	29,4	27,2	23,15	M4	3,2
22	248-8520-000	248-8508-000	37,4	41,0	31,8	27,2	23,15	M4	3,2
24	248-8521-000	248-8509-000	40,9	44,5	34,9	27,2	23,15	M4	3,7
28	248-8522-000	248-8510-000	46,7	50,8	39,7	28,2	24,15	M5	3,7
32	248-8523-000	248-8511-000	53,4	57,0	44,5	28,2	24,15	M5	4,4
36	248-8524-000	248-8512-000	59,6	63,5	49,2	28,2	24,15	M5	4,4

Dimensions shown in mm
Specifications and dimensions subject to change

Sealing Rings

For use on the barrel of the plug; interfacial seal.

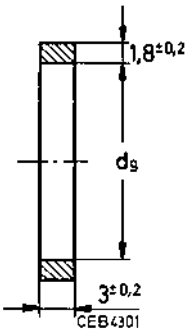

Size	Part no.	d_9
10SL	980-8550-000	9,0
12S	980-8551-000	11,5
14S	980-8552-000	14,0
16/16S	980-8553-000	17,0
18	980-8554-000	19,5
20	980-8555-000	22,5
22	980-8556-000	25,4
24	980-8557-000	28,5
28	980-8558-000	34,0
32	980-8559-000	40,0
36	980-8560-000	45,0

Wire Hole Fillers

Used to close unused contact cavities. Contacts have to be installed while the wire hole fillers are mounted into the relevant open grommet holes.

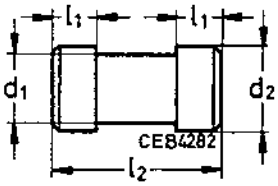

Shell size	VG95234 Part No.	For contact size metr.	AWG	d_1 ±0,1	d_2 ±0,2	l_1 ±0,1	l_2 ±0,3	Colour	Part No.
20	VG95234B20	10		2,3	3,0	2,4	9,7	red	225-1000-000
16S	VG95234B16S	15S	16S	2,8	3,7	1,5	4,8	natural	225-8510-000
16	VG95234B16	15S/15	16S/16	2,8	3,7	3,2	11,9	blue	225-0017-000
12	VG95234B12	25/25A	12	3,7	4,6	3,2	11,9	yellow	225-0018-000
8	VG95234B08	60/100	8	5	5,8	3,2	11,9	white	225-0019-000
4	VG95234B04	160	4	7,6	8,5	3,2	11,9	green	225-8502-000
0	VG95234B00	500	0	12,8	13,5	3,2	11,9	black	225-8503-000

Dimensions shown in mm
Specifications and dimensions subject to change

Cable Clamps

without telescoping bushing
VG95234 Style KK

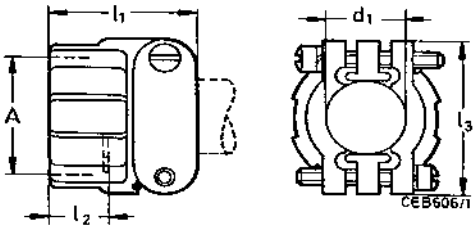

VG95234 Part No.	Former Designation MS	Shell size suitable for connectors acc. MS	A-Thread	l_2 max.	d_1 max.	l_1 max.	l_3 max.	Max. Shell-Weight g
VG95234KK 4	MS3057- 4A*	10SL, 12S,	5/8-24UNEF-2B	10,5	7,9	20,8	22,5	15
VG95234KK 6	MS3057- 6A*	14S,	3/4-20UNEF-2B	10,5	11,1	22,4	27,4	20
VG95234KK 8	MS3057- 8A*	16S, 16	7/8-20UNEF-2B	10,5	14,2	24,0	29,8	25
VG95234KK10	MS3057-10A*	18	1-20UNEF-2B	10,5	15,8	24,0	32,2	25
VG95234KK12	MS3057-12A*	20, 22	1 3/16-18NEF-2B	10,5	19,0	24,0	37,4	35
VG95234KK16	MS3057-16A*	24, 28	1 7/16-18NEF-2B	10,5	23,7	26,4	43,5	45
VG95234KK20	MS3057-20A*	32	1 3/4-18NS-2B	12,0	31,8	28,0	51,7	55
VG95234KK24	MS3057-24A*	36	2-18NS-2B	13,7	34,6	29,6	57,8	75

* WB = Cable clamp with telescoping bushing.

Telescoping Bushings

Telescoping bushings (used with MS3057A resp. VG95234KK cable clamp) keep dirt, oil and dust out of the endbell. Taping or wrapping wires is eliminated since bushing protects wires guided through the clamp.
Material: Polychloroprene

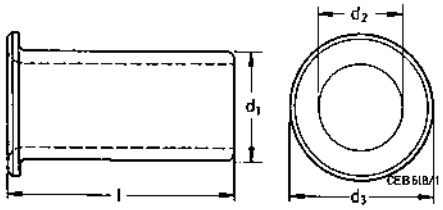

Shell size	VG95234 Part No.	Cannon Part no.	d_1	d_2	d_3	l	Weight g
10SL	VG95234KT10SL	012-8552-000	8.0	6.6	9.9	70.0	4
14S	VG95234KT14S	012-8554-000	10.9	9.1	12.7	67.0	5
16S, 16	VG95234KT16	012-0218-000	14.0	11.1	19.0	64.0	6
18	VG95234KT18	012-0219-000	15.7	14.3	22.0	60.0	4
20, 22	VG95234KT20	012-0220-000	18.8	15.9	26.9	57.0	7
24, 28	VG95234KT24	012-8556-000	23.6	21.5	33.3	54.0	13
32	VG95234KT32	012-8558-000	31.5	26.8	40.4	51.0	26
36	VG95234KT36	012-0223-000	34.7	31.8	46.8	48.0	30
24.28	-	012-8555-000	21.2	16.6	26.9	57.0	13
32	-	012-8557-000	26.5	21.5	33.3	54.0	26

The Commercial versions allow for the following combinations of two bushings used together in order to decrease the inner diameter as required.

Shell size	Combination of:
24, 28	012-8556-000 and 012-8555-000
32	012-8558-000 and 012-8557-000
36	012-0223-000 and 012-8558-000

Dimensions shown in mm
Specifications and dimensions subject to change

Gaskets

Thickness of gaskets =1,0 mm (Made of Polychloropren, mod. "1"). 0,5 mm (Made of Alu-Flex, mod. "2")
VG95234 Style DA for front panel mounting
VG95234 Style DH for rear panel mounting

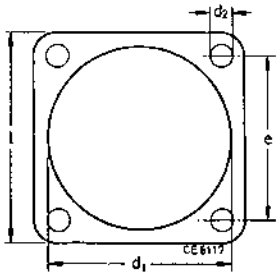

For front panel mounting

Shell size	VG95234 Part No.	Part no. Version Polychloropen[1]	Part no. Version Alu-Flex[2]	l ±0,5	e ±0,2	d_1 +1	d_2 +0,5	Weight g max.
10SL	VG95234 DA 10SL-X	075-8512-000	075-8512-001	25,4	18,2	15,7	4,2	2
12S		075-8513-000	075-8513-001	28,0	20,6	18,9	4,2	2
14S	VG95234 DA 14S-X	075-8514-000	075-8514-001	30,0	23,0	22,1	4,2	2
16/16S	VG95234 DA 16-X	075-8515-000	075-8515-001	32,5	24,6	25,3	4,2	2
18	VG95234 DA 18-X	075-8516-000	075-8516-001	35,0	27,0	28,4	4,2	2
20	VG95234 DA 20-X	075-8517-000	075-8517-001	38,0	29,4	31,6	4,2	2
22	VG95234 DA 22-X	075-8518-000	075-8518-001	41,0	31,8	34,8	4,2	2
24	VG95234 DA 24-X	075-8519-000	075-8519-001	44,5	34,9	38,0	4,2	2
28	VG95234 DA 28-X	075-8520-000	075-8520-001	50,8	39,7	44,3	5,1	2
32	VG95234 DA 32-X	075-8521-000	075-8521-001	57,0	44,5	50,7	5,1	2
36	VG95234 DA 36-X	075-8522-000	075-8522-001	63,5	49,2	57,0	5,1	2

For rear panel mounting

Shell size	VG95234 Part No.	Part no. Version Polychloropen[1]	Part no. Version Alu-Flex[2]	l ±0,5	e ±0,2	d_1 +1	d_2 +0,5	Weight g max.
10SL	VG95234 DH 10SL-X	075-8501-000	075-8501-001	25,4	18,2	18,2	4,2	2
12S		075-8502-000	075-8502-001	28,0	20,6	21,4	4,2	2
14S	VG95234 DH 14S-X	075-8503-000	075-8503-001	30,0	23,0	24,6	4,2	2
16/16S	VG95234 DH 16-X	075-8504-000	075-8504-001	32,5	24,6	27,4	4,2	2
18	VG95234 DH 18-X	075-8505-000	075-8505-001	35,0	27,0	30,8	4,2	2
20	VG95234 DH 20-X	075-8506-000	075-8506-001	38,0	29,4	34,2	4,2	2
22	VG95234 DH 22-X	075-8507-000	075-8507-001	41,0	31,8	37,4	4,2	2
24	VG95234 DH 24-X	075-8508-000	075-8508-001	44,5	34,9	40,9	4,2	2
28	VG95234 DH 28-X	075-8509-000	075-8509-001	50,8	39,7	46,7	5,1	2
32	VG95234 DH 32-X	075-8510-000	075-85010-001	57,0	44,5	53,4	5,1	2
36	VG95234 DH 36-X	075-8511-000	075-85011-001	63,5	49,2	59,6	5,1	2

X = insert "1" (electrically non-conductive) or "2" (electrically conductive).

Dimensions shown in mm
Specifications and dimensions subject to change

ITT
ENGINEERED FOR LIFE

Pin contacts

Standard contacts and contacts with reduced termination diameter
Pin contacts
Finish
A36 – 5 μm silver plated and passivated
A176 – 2 μm nickel plated, min. 0,5 μm gold plated

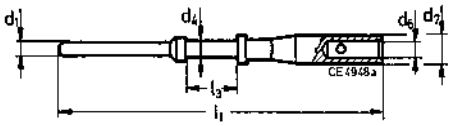

Size 10/20

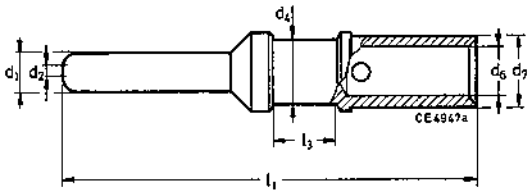

Size 15S/16S, 15/16, 25/12, 60/100/8, 160/4, 500/0

Contact size	VG95234 Part No.	Wire size mm²	AWG	Part no. with finish Standard: A36 silver plated	Part no. with finish Mod. Code: A176 gold plated	d_1 -0,05	d_4	d_6	d_7	l_1 ±0,15	l_3 ±0,5	Color Code
10/20	VG95234P10	0,5-1,0	20/18	030-8585-009	030-8585-011	1,04	$1,5^{+0,05}$	$1,5^{+0,05}$	$2,4^{-0,05}$	28,4	4,75	–
	VG95234P10-001	0,2-0,4	26/22	030-8585-004	030-8585-008	1,04	$1,5^{+0,05}$	$0,9^{+0,05}$	$2,4^{-0,05}$	28,4	4,75	blue
15S/16S	VG95234P15S	0,75-1,5	18/16	030-8586-000	030-8586-006	1,6	$1,75^{-0,1}$	$1,75^{+0,08}$	$2,75^{-0,05}$	27,4	3,85	–
	VG95234P15S-002	0,3-0,6	22/20	330-8744-000	330-8744-006	1,6	$1,75^{-0,1}$	$1,2^{+0,1}$	$2,75^{-0,05}$	27,4	3,85	red
	VG95234P15S-001	0,14-0,38	22/26	030-8586-010	030-8586-016	1,6	$1,75^{-0,1}$	$0,9^{+0,05}$	$2,75^{-0,05}$	27,4	3,85	blue
15/16	VG95234P15	0,75-1,5	18/16	030-8587-000	030-8587-006	1,6	$1,75^{-0,1}$	$1,75^{+0,08}$	$2,75^{-0,05}$	31,4	7,9	–
	VG95234P15-002	0,3-0,6	22/20	330-8659-000	330-8659-006	1,6	$1,75^{-0,1}$	$1,2^{+0,1}$	$2,75^{-0,05}$	31,4	7,9	red
	VG95234P15-001	0,14-0,38	22/26	030-8587-030	030-8587-036	1,6	$1,75^{-0,1}$	$0,9^{+0,05}$	$2,75^{-0,05}$	31,4	7,9	blue
25/12	VG95234P25	2,0-3,0	14/12	030-8588-000	030-8588-006	2,4	$3,3^{-0,15}$	$2,5^{+0,1}$	$3,8^{-0,1}$	37,0	7,9	–
	VG95234P25-001	0,75-1,5	18/16	030-8588-010	030-8588-016	2,4	$3,3^{-0,15}$	$1,75^{+0,08}$	$3,4^{-0,1}$	37,0	7,9	black
		4,0	–	030-8588-054	–	2,4	$3,3^{-0,15}$	$2,8^{+0,1}$	$3,8^{-0,1}$	37,0	7,9	–
60/100/8	VG95234P8	–	8	030-8612-000	030-8612-006	3,6	$6,25^{-0,15}$	$4,55^{+0,1}$	$6,8^{-0,1}$	39,6	6,35	–
	VG95234P60	6,0	10	030-8589-000	–	3,6	$6,25^{-0,15}$	$3,5^{+0,1}$	$6,8^{-0,1}$	39,6	6,35	yellow
	VG95234P100	10,0	–	030-8590-000	–	3,6	$6,25^{-0,15}$	$4,8^{+0,1}$	$6,8^{-0,1}$	39,6	6,35	–
	VG95234P60-001	2,0-3,0	14/12	030-8612-010	–	3,6	$6,25^{-0,15}$	$2,5^{+0,05}$	$6,8^{-0,1}$	39,6	6,35	green
160/4	VG95234P4	–	4	030-8613-000	–	5,75	$9,55^{-0,15}$	$7,1^{+0,15}$	$9,55^{-0,1}$	39,6	6,35	–
	VG95234P160	16,0	–	030-8591-000	–	5,75	$9,55^{-0,15}$	$6,2^{+0,15}$	$9,55^{-0,1}$	39,6	6,35	–
		10,0	–	030-8591-020	–	5,75	$9,55^{-0,15}$	$4,8^{+0,1}$	$9,55^{-0,1}$	39,6	6,35	–
	VG95234P160-001	–	6	030-8613-010	–	5,75	$9,55^{-0,15}$	$5,7^{+0,1}$	$9,55^{-0,1}$	39,6	6,35	brown
500/0	VG95234P0	–	0	030-8614-000	–	9,1	$13,55^{-0,15}$	$11,5^{+0,15}$	$14,35^{-0,1}$	41,0	6,35	–
	VG95234P500	50,0	–	030-8592-000	–	9,1	$13,55^{-0,15}$	$10,7^{+0,15}$	$14,35^{-0,1}$	41,0	6,35	–
	VG95234P500-001	25,0	4	030-8614-010	–	9,1	$13,55^{-0,15}$	$7,6^{+0,15}$	$14,35^{-0,1}$	41,0	6,35	white
	VG95234P500-002	35,0	2	030-8614-020	–	9,1	$13,55^{-0,15}$	$9,1^{+0,15}$	$14,35^{-0,1}$	41,0	6,35	grey
		16,0	–	030-8614-030	–	9,1	$13,55^{-0,15}$	$6,2^{+0,15}$	$14,35^{-0,1}$	41,0	6,35	–

Dimensions shown in mm
Specifications and dimensions subject to change

Socket contacts

Standard contacts and contacts with reduced termination diameter

Socket contacts

Finish

A36 – 5 μm silver plated and passivated

A176 – 2 μm nickel plated, min. 0,5 μm gold plated

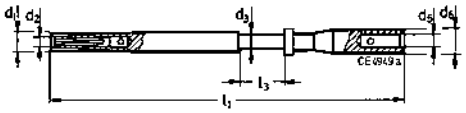

Size 10/20

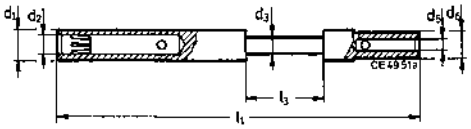

Size 15S/16S, 15/16

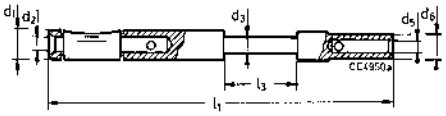

Size 25/12

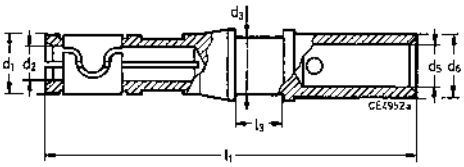

Size 60/100/8, 160/4, 500/0

Contact size	VG95234 Part No.	Wire size mm^2	AWG	Part no. with finish Standard: A36 silver plated	Part no. with finish Mod. Code: A176 gold plated	d_1	d_2 +0,05	d_3	d_5	d_6	l_1 ±0,2	l_3 ±0,1	Color Code
10/20	VG95234S10	0,5-1,0	20/18	031-8554-009	031-8554-011	$2,0^{-0,1}$	1,07	$1,5^{-0,05}$	$1,5^{+0,05}$	$2,4^{-0,05}$	36,8 ±0,3	4,75	–
	VG95234S10-001	0,2-0,4	26/22	031-8554-004	031-8554-008	$2,0^{-0,1}$	1,07	$1,5^{-0,05}$	$0,9^{+0,05}$	$2,4^{-0,05}$	36,8 ±0,3	4,75	blue
15S/16S	VG95234S15S	0,75-1,5	18/16	031-8555-110	031-8555-115	$3,2^{-0,15}$	1,65	$1,75^{-0,1}$	$1,75^{+0,08}$	$2,75^{-0,05}$	29,1	3,9	–
	VG95234S15S-002	0,3-0,6	22/20	031-8688-110	031-8688-115	$3,2^{-0,15}$	1,65	$1,75^{-0,1}$	$1,20^{+0,1}$	$2,75^{-0,05}$	29,1	3,9	red
	VG95234S15S-001	0,14-0,38	22/26	031-8555-130	031-8555-135	$3,2^{-0,15}$	1,65	$1,75^{-0,1}$	$0,90^{+0,05}$	$2,75^{-0,05}$	29,1	3,9	blue
15/16	VG95234S15	0,75-1,5	18/16	031-8556-110	031-8556-115	$3,2^{-0,15}$	1,65	$1,75^{-0,1}$	$1,75^{+0,08}$	$2,75^{-0,05}$	37,8	7,9	–
	VG95234S15-002	0,3-0,6	22/20	031-8639-120	031-8639-115	$3,2^{-0,15}$	1,65	$1,75^{-0,1}$	$1,2^{+0,1}$	$2,75^{-0,05}$	37,8	7,9	red
	VG95234S15-001	0,14-0,38	22/26	031-8556-130	031-8556-135	$3,2^{-0,15}$	1,65	$1,75^{-0,1}$	$0,9^{+0,05}$	$2,75^{-0,05}$	37,8	7,9	blue
25/12	VG95234S25	2,0-3,0	14/12	031-8557-000	031-8557-006	$4,8^{-0,1}$	2,45	$3,3^{-0,1}$	$2,5^{+0,1}$	$3,8^{-0,1}$	37,0	7,9	–
	VG95234S25-001	0,75-1,5	18/16	031-8557-020	031-8557-026	$4,8^{-0,1}$	2,45	$3,3^{-0,1}$	$1,75^{+0,08}$	$3,4^{-0,1}$	37,0	7,9	black
		4,0	–	031-8557-010	–	$4,8^{-0,1}$	2,45	$3,3^{-0,1}$	$2,8^{+0,1}$	$3,8^{-0,1}$	37,0	7,9	–
		0,3–0,6	22/20	031-8557-040	–	$4,8^{-0,1}$	2,45	$3,3^{-0,1}$	$1,2^{+0,1}$	$2,75^{-0,1}$	37,0	7,9	–
60/100/8	VG95234S8	–	8	031-8519-000	031-8519-006	$6,5^{-0,2}$	3,65	$6,25^{-0,2}$	$4,55^{+0,1}$	$6,8^{-0,1}$	40,1	6,35	–
	VG95234S60	6,0	10	031-8558-000	–	$6,5^{-0,2}$	3,65	$6,25^{-0,2}$	$3,5^{+0,1}$	$6,8^{-0,1}$	40,1	6,35	yellow
	VG95234S100	10,0	–	031-8559-000	–	$6,5^{-0,2}$	3,65	$6,25^{-0,2}$	$4,8^{+0,1}$	$6,8^{-0,1}$	40,1	6,35	–
	VG95234S60-001	2,0-3,0	14/12	031-8519-010	–	$6,5^{-0,2}$	3,65	$6,25^{-0,2}$	$2,5^{+0,05}$	$6,8^{-0,1}$	40,1	6,35	green
160/4	VG95234S4	–	4	031-8520-000	–	$8,6^{-0,2}$	5,8	$9,55^{-0,2}$	$7,1^{+0,15}$	$9,55^{-0,1}$	40,1	6,35	–
	VG95234S160	16,0	–	031-8560-000	–	$8,6^{-0,2}$	5,8	$9,55^{-0,2}$	$6,2^{+0,15}$	$9,55^{-0,1}$	40,1	6,35	–
		10,0	–	031-8560-020	–	$8,6^{-0,2}$	5,8	$9,55^{-0,2}$	$4,8^{+0,1}$	$9,55^{-0,1}$	40,1	6,35	–
	VG95234S160-001	–	6	031-8520-010	–	$8,6^{-0,2}$	5,8	$9,55^{-0,2}$	$5,7^{+0,15}$	$9,55^{-0,1}$	40,1	6,35	brown
500/0	VG95234S0	–	0	031-8521-000	–	$13,2^{-0,2}$	9,15	$13,55^{-0,2}$	$11,5^{+0,15}$	$14,35^{-0,1}$	41,6	6,35	–
	VG95234S500	50,0	–	031-8561-000	–	$13,2^{-0,2}$	9,15	$13,55^{-0,2}$	$10,7^{+0,15}$	$14,35^{-0,1}$	41,6	6,35	–
	VG95234S500-001	25,0	4	031-8521-010	–	$13,2^{-0,2}$	9,15	$13,55^{-0,2}$	$7,6^{+0,15}$	$14,35^{-0,1}$	41,6	6,35	white
	VG95234S500-002	35,0	2	031-8521-020	–	$13,2^{-0,2}$	9,15	$13,55^{-0,2}$	$9,1^{+0,15}$	$14,35^{-0,1}$	41,6	6,35	grey
		16,0	–	031-8521-030	–	$13,2^{-0,2}$	9,15	$13,55^{-0,2}$	$6,2^{+0,15}$	$14,35^{-0,1}$	41,6	6,35	–

Dimensions shown in mm

Specifications and dimensions subject to change

CA Bayonet Layout Overview with standard contact wire size

The table below shows all available contact arrangements (layouts) available for ITT's CA Bayonet product line.

For each layout the crimp contact styles and wire cross sections used as default are shown.

If other crimp sizes are required the connector can be ordered with suffix "-F0" (without contacts).

See ordering key on page 11 for details. In this case, separate contacts can be selected according to contact selection tables on pages 54-55.

*The numbers represent modifications for contact termination as listed on page 12. E.g. CA3106E20-29S-B-14 is the modification for a shielded endbell with metric crimp contacts.

Layout	No. of Contacts	Contact size	Contact Termination*	
			-01, -03, -04, - 14	-F80, -02, -15, -109
			wire size mm²	wire size AWG
10SL-3	3	15S/16S	0,75-1,5	18/16
10SL-4	2	15S/16S	0,75-1,5	18/16
12S-3	2	15S/16S	0,75-1,5	18/16
12S-4	1	15S/16S	0,75-1,5	18/16
12SA10	4	15S/16S	0,75-1,5	18/16
14S-1	3	15S/16S	0,75-1,5	18/16
14S-2	4	15S/16S	0,75-1,5	18/16
14S-4	1	15S/16S	0,75-1,5	18/16
14S-5	5	15S/16S	0,75-1,5	18/16
14S-6	6	15S/16S	0,75-1,5	18/16
14S-7	3	15S/16S	0,75-1,5	18/16
14S-9	2	15S/16S	0,75-1,5	18/16
14SA7	7	15S/16S	0,75-1,5	18/16
16S-1	7	15S/16S	0,75-1,5	18/16
16S-4	2	15S/16S	0,75-1,5	18/16
16S-5	3	15S/16S	0,75-1,5	18/16
16S-8	5	15S/16S	0,75-1,5	18/16
16-7	2	15/16	0,75-1,5	18/16
	1	60/100/8	10.0	8
16-9	2	15/16	0,75-1,5	18/16
	2	25/12	2,0-3,0	14/12
16-10	3	25/12	2,0-3,0	14/12
16-11	2	25/12	2,0-3,0	14/12
16-12	1	160/4	16.0	4
16A11	2	25/12	2,0-3,0	14/12
18-1	10	15/16	0,75-1,5	18/16
18-3	2	25/12	2,0-3,0	14/12
18-4	4	15/16	0,75-1,5	18/16
18-5	2	25/12	2,0-3,0	14/12
	1	15/16	0,75-1,5	18/16
18-6	1	160/4	16.0	4
18-7	1	60/100/8	10.0	8
18-8	1	25/12	2,0-3,0	14/12
	7	15/16	0,75-1,5	18/16
18-9	5	15/16	0,75-1,5	18/16

Layout	No. of Contacts	Contact size	Contact Termination*	
			-01, -03, -04, - 14	-F80, -02, -15, -109
			wire size mm²	wire size AWG
	2	25/12	2,0-3,0	18/16
18-10	4	25/12	2,0-3,0	14/12
18-11	5	25/12	2,0-3,0	14/12
18-12	6	15/16	0,75-1,5	18/16
18-13	3	25/12	2,0-3,0	14/12
	1	60/100/8	10.0	8
18-17	2	25/12	2,0-3,0	14/12
	5	15/16	0,75-1,5	18/16
18-19	10	15/16	0,75-1,5	18/16
18-20	5	15/16	0,75-1,5	18/16
18-21	3	25/12	2,0-3,0	14/12
18-22	3	15/16	0,75-1,5	18/16
20-2	1	500/0	50.0	0
20-3	3	25/12	2,0-3,0	14/12
20-4	4	25/12	2,0-3,0	14/12
20-6	3	15/16	0,75-1,5	18/16
20-7	8	15/16	0,75-1,5	18/16
20-8	4	15/16	0,75-1,5	18/16
	2	60/100/8	10.0	8
20-11	13	15/16	0,75-1,5	18/16
20-14	3	25/12	2,0-3,0	14/12
	2	60/100/8	10.0	8
20-15	7	25/12	2,0-3,0	14/12
20-16	2	25/12	2,0-3,0	14/12
	7	15/16	0,75-1,5	18/16
20-17	5	25/12	2,0-3,0	14/12
	1	15/16	0,75-1,5	18/16
20-18	3	25/12	2,0-3,0	14/12
	6	15/16	0,75-1,5	18/16
20-19	3	60/100/8	10.0	8
20-22	3	15/16	0,75-1,5	18/16
	3	60/100/8	10.0	8
20-23	2	60/100/8	10.0	8
20-24	2	15/16	0,75-1,5	18/16
	2	60/100/8	10.0	8
20-27	14	15/16	0,75-1,5	18/16
20-29	17	15/16	0,75-1,5	18/16
20-33	11	15/16	0,75-1,5	18/16
20A9	9	25/12	2,0-3,0	14/12
20A24	24	10/20	0,5-1,0	20/18
20A48	19	15/16	0,75-1,5	18/16
22-1	2	60/100/8	10.0	8
22-2	3	60/100/8	10.0	8
22-4	2	25/12	2,0-3,0	14/12
	2	60/100/8	10.0	8
22-5	2	25/12	2,0-3,0	14/12
	4	15/16	0,75-1,5	18/16
22-7	1	500/0	50.0	0
22-8	2	25/12	2,0-3,0	14/12
22-9	3	25/12	2,0-3,0	14/12
22-10	4	15/16	0,75-1,5	18/16
22-12	2	60/100/8	10.0	8
	3	15/16	0,75-1,5	18/16
22-14	19	15/16	0,75-1,5	18/16
22-15	5	25/12	2,0-3,0	14/12
	1	15/16	0,75-1,5	18/16

Dimensions shown in mm
Specifications and dimensions subject to change

Layout	No. of Contacts	Contact size	Contact Termination*	
			-01, -03, -04, - 14	-F80, -02, -15, -109
			wire size mm²	wire size AWG
22-16	3	25/12	2,0-3,0	14/12
	6	15/16	0,75-1,5	18/16
22-19	14	15/16	0,75-1,5	18/16
22-20	9	15/16	0,75-1,5	18/16
22-21	2	15/16	0,75-1,5	18/16
	1	500/0	50.0	0
22-22	4	60/100/8	10.0	8
22-23	8	25/12	2,0-3,0	14/12
22-27	1	60/100/8	10.0	8
	8	15/16	0,75-1,5	18/16
22-28	7	25/12	2,0-3,0	14/12
24-2	7	25/12	2,0-3,0	14/12
24-4	1	500/0	50.0	0
	3	15/16	0,75-1,5	18/16
24-5	16	15/16	0,75-1,5	18/16
24-6	8	25/12	2,0-3,0	14/12
24-7	2	25/12	2,0-3,0	14/12
	14	15/16	0,75-1,5	18/16
24-9	2	160/4	16.0	4
24-10	7	60/100/8	10.0	8
24-11	6	25/12	2,0-3,0	14/12
	3	60/100/8	10.0	-
24-12	3	25/12	2,0-3,0	14/12
	2	160/4	16.0	4
24-19	12	15/16	0,75-1,5	18/16
24-20	2	25/12	2,0-3,0	14/12
	9	15/16	0,75-0,5	18/16
24-22	4	60/100/8	10.0	8
24-27	7	15/16	0,75-1,5	18/16
24-28	24	15/16	0,75-1,5	18/16
24A24	12	25/12	2,0-3,0	14/12
24A28	28	15/16	0,75-1,5	18/16
24A51	13	15/16	0,75-1,5	18/16
	5	25/12	2,0-3,0	14/12
	1	60/100/8	10.0	8
28-2	12	15/16	0,75-1,5	18/16
	2	25/12	2,0-3,0	14/12
28-5	2	15/16	0,75-1,5	18/16
	2	160/4	16.0	4
	1	25/12	2,0-3,0	14/12
28-9	6	15/16	0,75-1,5	18/16
	6	25/12	2,0-3,0	14/12
28-10	2	160/4	16.0	4
	2	60/100/8	10.0	8
	3	25/12	2,0-3,0	14/12
28-11	18	15/16	0,75-1,5	18/16
	4	25/12	2,0-3,0	14/12
28-12	26	15/16	0,75-1,5	18/16
28-15	35	15/16	0,75-1,5	18/16
28-16	20	15/16	0,75-1,5	18/16
28-20	4	15/16	0,75-1,5	18/16
	10	25/12	2,0-3,0	14/12
28-21	37	15/16	0,75-1,5	18/16
28-22	3	160/4	16.0	4

Layout	No. of Contacts	Contact size	Contact Termination*	
			-01, -03, -04, - 14	-F80, -02, -15, -109
			wire size mm²	wire size AWG
	3	15/16	0,75-1,5	18/16
28-51	12	25/12	2,0-3,0	14/12
28A16	4	160/4	16.0	4
	5	15/16	0,75-1,5	18/16
28A51	43	15/16	0,75-1,5	18/16
28A63	19	15/16	0,75-1,5	18/16
	9	25/12	2,0-3,0	14/12
32-1	3	25/12	2,0-3,0	14/12
	2	500/0	50.0	0
32-5	2	500/0	50.0	0
32-6	16	15/16	0,75-1,5	18/16
	2	25/12	2,0-3,0	14/12
	3	60/100/8	10.0	8
	2	160/4	16.0	4
32-7	28	15/16	0,75-1,5	18/16
	7	25/12	2,0-3,0	14/12
32-8	6	25/12	2,0-3,0	14/12
	24	15/16	0,75-1,5	18/16
32-9	12	15/16	0,75-1,5	18/16
	2	160/4	16	4
32-13	5	25/12	2,0-3,0	14/12
	18	15/16	0,75-1,5	18/16
32-15	6	25/12	2,0-3,0	14/12
	2	500/0	50.0	0
32-17	4	160/4	16.0	4
32A10	54	15/16	0,75-1,5	18/16
32A47	47	15/16	0,75-1,5	18/16
32A55	55	15/16	0,75-1,5	18/16
32A69	41	10/20	0,5-1,0	20/18
	20	15/16	0,75-1,5	18/16
36-3	3	500/0	50.0	0
	3	25/12	2,0-3,0	14/12
36-5	4	500/0	50.0	0
36-6	4	160/4	16.0	4
	2	500/0	50.0	0
36-7	7	25/12	2,0-3,0	14/12
	40	15/16	0,75-1,5	18/16
36-8	1	25/12	2,0-3,0	14/12
	46	15/16	0,75-1,5	18/16
36-9	14	15/16	0,75-1,5	18/16
	14	25/12	2,0-3,0	14/12
	2	60/100/8	10.0	8
	1	160/4	16.0	4
36-10	48	15/16	0,75-1,5	18/16
36-14	5	60/100/8	10.0	8
	5	25/12	2,0-3,0	14/12
	6	15/16	0,75-1,5	18/16
36-15	35	15/16	0,75-1,5	18/16
36A34	52	15/16	0,75-1,5	18/16
36A35	4	15/16	0,75-1,5	18/16
	4	500/0	50.0	0
36A46	27	25/12	2,0-3,0	14/12
36A98	8	60/100/8	10	8
	31	15/16	0,75-1,5	18/16
36A99	15	15/16	0,75-1,5	18/16
	50	10/20	0,2-0,4	26/22

Dimensions shown in mm
Specifications and dimensions subject to change

ITT
ENGINEERED FOR LIFE

VG Layout Overview with standard contact wire size

The table below shows all contact arrangements (VG layouts) permitted to be used under VG95234 standard.

For each layout the contact sizes and wire sizes used as default are shown. Generally, all contacts used according to VG95234 are crimp contacts.

If other crimp sizes are required the VG95234 standard allows to order a connector without contacts.

See ordering key on page 10 for details. In this case, separate contacts can be selected according to contact selection tables on pages 54-55.

* The numbers represent modifications for contact termination as listed on page 12. E.g. VG95234M20-22P2N is the modification for a shielded endbell with metric and AWG crimp contacts.

Layout	No. of Contacts	Contact size	Contact Termination*			
			no identification	1	2	
			wire size mm²	wire size AWG	wire size mm²	wire size AWG
10SL-3	3	15S	0,75-1,5	-	-	-
10SL-4	2	15S	0,75-1,5	-	-	-
14S-6	6	15S	0,75-1,5	-	-	-
14S-7	3	15S	0,75-1,5	-	-	-
16S-1	7	15S	0,75-1,5	-	-	-
16S-4	2	15S	0,75-1,5	-	-	-
16-7	2	15	0,75-1,5	-	-	-
	1	100	10.0	-	-	-
16-10	3	25	2,0-3,0	-	-	-
16-12	1	160	16.0	-	-	-
16A11	2	25/25A	2,0-3,0	-	-	-
18-1	10	15	0,75-1,5	-	-	-
18-9	5	15	0,75-1,5	-	-	-
	2	25	2,0-3,0	-	-	-
18-11	5	25	2,0-3,0	-	-	-
18-13	3	25	2,0-3,0	-	-	-
	1	60	6.0	-	-	-
20-2	1	500	50.0	-	-	-
20-8	4	15	0,75-1,5	-	-	-
	2	100	10.0	-	-	-
20-22	3	15	-	-	0,75-1,5	-
	3	8	-	-	-	8
20A9	9	25	2,0-3,0	-	-	-
20A48	19	15	0,75-1,5	-	-	-
22-2	3	8	-	8	-	-
22-12	2	100	10.0	-	-	-
	3	15	0,75-1,5	-	-	-
22-14	19	15	0,75-1,5	-	-	-
22-22	4	100	10.0	-	-	-
22-27	1	60	6.0	-	-	-
	8	15	0,75-1,5	-	-	-
22B22	4	60	6.0	-	-	-
24-9	2	4	-	4	-	-
24-10	7	100	-	-	-	-
24-11	6	25	2,0-3,0	14/12	-	-
	3	100	10.0	8	-	-
24-12	3	12	-	14/12	-	-
	2	4	-	4	-	-
24-28	24	15	0,75-1,5	-	-	-
28-11	18	15	0,75-1,5	-	-	-
	4	25	2,0-3,0	-	-	-
28A16	5	15	-	-	0,75-1,5	-

Layout	No. of Contacts	Contact size	Contact Termination*			
			no identification	1	2	
			wire size mm²	wire size AWG	wire size mm²	wire size AWG
	4	4	-	-	-	4
28-20	4	15	0,75-1,5	-	-	-
	10	25	2,0-3,0	-	-	-
28-21	37	15	0,75-1,5	-	-	-
28-22	3	160	16.0	4	-	-
	3	15	0,75-1,5	18/16	-	-
28A63	19	15	0,75-1,5	-	-	-
	9	25	2,0-3,0	-	-	-
32-1	3	25	2,0-3,0	14/12	-	-
	2	500	50.0	0	-	-
32-6	16	15	0,75-1,5	18/16	-	-
	2	25	2,0-3,0	14/12	-	-
	3	60	6.0	8	-	-
	2	160	16.0	4	-	-
32-7	28	15	0,75-1,5	-	-	-
	7	25	2,0-3,0	-	-	-
32-15	6	25	-	-	2,0-3,0	-
	2	0	-	-	-	0
32A69	41	10	0,5-1,0	-	-	-
	20	15	0,75-1,5	-	-	-
36-3	3	500	50.0	0	-	-
	3	25	2,0-3,0	14/12	-	-
36-5	4	500	50.0	0	-	-
36-6	4	4	-	4	-	-
	2	0	-	0	-	-
36-10	48	15	0,75-1,5	-	-	-
36A35	4	15	-	-	0,75-1,5	-
	4	0	-	-	-	0

Dimensions shown in mm
Specifications and dimensions subject to change

ITT
ENGINEERED FOR LIFE

Tools

cannon

Crimp Tools

For pin and socket contacts according VG95234 and for Cannon contacts with reduced coupling dimensions.

	Contact Size	Wire size mm²	AWG	Hand Crimp Tools	Order Reference	Crimp Locator	Order Reference
	10	0,5-1,0	20/18	M22520-1-01	995-0001-585	600325	121586-0034
		0,2-0,4	26/22				
Pin	15S/16S	0,75-1,5	18/16			TH 452	995-0002-052
		0,3-0,6	22/20				
		0,14-0,38	22/26				
Socket	15S/16S	0,750-1,5	18/16				
		0,3-0,6	22/20				
		0,14-0,38	22/26				
	15/16	0,75-1,5	18/16				
		0,3-0,6	22/20				
		0,14-0,38	22/26				
	25/12	2,0-3,0	14/12				
		0,75-1,5	18/16				
		4					
	Contact Size	**Wire size mm²**	**AWG**	**Hydraulic Handpump**	**Order Number**	**Electro Hydraulic Tool**	**Order Number**
	60/100/8	6 2,0-3,0	8 10 14/12	HPW400U-ITT	121586-5257	HP400EL-ITT	121586-5253
	160/4	16 10	4 6				
	500/0	50 25 35 16	0 - 4 2 -				

Insertion & Extraction Tools

Crimp contacts should be inserted or, if needed, extracted with the correct tools. In order to avoid damage to the insulator it is recommended to use guide pins for the insertion of socket contacts.

Insertion Tools Part No.	Order Reference	Insertion Pliers Part No.	Order Reference	Extraction Tools Part No.	Order Reference	Guiding Pins for Socket Contacts
CIT 20	121086-3009	CIT-F80-20	121086-0098	CET-F80-20	121086-0082	
CIT 16	121086-3008	CIT-F80-16	121086-0097	CET-F80-16	121086-0081	27977-16T50
CIT 12	121086-3007	CIT-F80-12	121086-0096	CET-F80-12	121086-0080	27977-12T8
CIT 8	121086-0095			CET-8	121086-0079	
CIT 4	121086-0094			CET-4	121086-0078	
CIT 0	121086-0093			CET-0	121086-0077	

Dimensions shown in mm
Specifications and dimensions subject to change

Basic - Hydraulic - Electrically driven tool - Version A

H- Crimp Head

Electro Hydraulic Crimp Tool

Foot Pedal

Basic - Hydraulic - Manual Operated tool - Version B

Pump Handle with Reset Function

H- Crimp Head

Handle

Basic – Manual operated crimp tool – Version C

Version	Description	Marking	Part Number
A	Electro-Hydraulic Crimp tool set with foot pedal, hand control and crimp head	HP700EL-ITT	121586-5279
A (Accessory)	Switch mode power supply	SNT4-ITT	121586-5280
A (Accessory)	Lithium Ion Battery 18V 3A with recharger	LGA4-ITT	121586-5281
B	Manually operated Hydraulic handtool	HPW400U-ITT	121586-5257
C	Hand Crimp Tool	M22520-1-01	995-0001-585

Crimp tool and Bench mount

Foot pedal

Gauge

Description	Marking	Part Number
Pneumatic crimp tool (AWG 12 - 20)	WA27F-CE	121586-5067
Bench mount	BM-2	121586-5068
Foot pedal	WA10	121586-5069
Gauge	M22520-3-1	995-0001-684

Crimp Dies

Product	Contact Size	Part Number	Hex. Diameter	Stamped label	Cable Size AWG	mm²
Crimp die	60/100/8	121586-5231	5,20	01	8	6/10
	160/4	121586-5230	7,25	02	4	16
	500/0	121586-5229	11,40	03	0	50
Locator	MS / CA	121586-5232				

Crimp die with locator

Crimp die

Locator

Notes

1. For insertion and extraction of the contacts and for connector assembly, see Assembly Instructions MIL-C-5015/VG95234
2. Standard contacts acc. to MIL-C-5015/VG95234

* Datasheet available upon request

Dimensions shown in mm
Specifications and dimensions subject to change

ITT
ENGINEERED FOR LIFE

Part Number Search

cannon

Part Number	Page
012-0218-000	54
012-0219-000	54
012-0220-000	54
012-0223-000	54
012-8552-000	54
012-8554-000	54
012-8555-000	54
012-8556-000	54
012-8557-000	54
012-8558-000	54
025-8636-005	49
025-8636-006	49
025-8636-008	49
025-8636-010	49
025-8636-016	49
025-8636-017	49
025-8636-018	49
025-8636-022	49
025-8636-024	49
025-8636-025	49
025-8636-026	49
025-8636-034	49
025-8636-036	49
025-8636-042	49
025-8636-044	49
025-8636-048	49
025-8636-049	49
025-8636-053	49
025-8636-054	49
025-8636-058	49
025-8636-060	49
025-8636-061	49
025-8636-062	49
025-8636-064	49
025-8636-065	49
030-8585-000	56
030-8585-006	56
030-8585-010	56
030-8586-000	56
030-8586-006	56
030-8586-010	56
030-8587-000	56
030-8587-006	56
030-8587-030	56
030-8587-036	56
030-8588-000	56
030-8588-006	56
030-8588-010	56
030-8588-016	56
030-8588-054	56
030-8589-000	56
030-8590-000	56
030-8591-000	56
030-8591-020	56
030-8592-000	56
030-8612-000	56
030-8612-006	56
030-8612-010	56
030-8613-000	56
030-8613-010	56
030-8614-000	56
030-8614-010	56
030-8614-020	56
030-8614-030	56
031-8519-000	57
031-8519-006	57
031-8519-010	57
031-8520-000	57
031-8520-010	57
031-8521-000	57
031-8521-010	57
031-8521-020	57
031-8521-030	57
031-8554-000	57
031-8554-006	57
031-8554-010	57
031-8555-110	57
031-8555-115	57
031-8555-115	57
031-8555-130	57
031-8556-110	57
031-8556-115	57
031-8556-130	57
031-8557-000	57
031-8557-006	57
031-8557-010	57
031-8557-020	57
031-8557-026	57
031-8557-040	57
031-8558-000	57
031-8559-000	57
031-8560-000	57
031-8560-020	57
031-8561-000	57
031-8639-115	57
031-8639-120	57
031-8688-110	57
075-8501-000	55
075-8502-000	55
075-8503-000	55
075-8504-000	55
075-8505-000	55
075-8506-000	55
075-8507-000	55
075-8508-000	55
075-8509-000	55
075-8510-000	55
075-8511-000	55
075-8512-000	55
075-8513-000	55
075-8514-000	55
075-8515-000	55
075-8516-000	55
075-8517-000	55
075-8518-000	55
075-8519-000	55
075-8520-000	55
075-8521-000	55
075-8522-000	55
121086-0077	62
121086-0078	62
121086-0079	62
121086-0080	62
121086-0081	62
121086-0082	62
121086-0093	62
121086-0094	62
121086-0095	62
121086-0096	62
121086-0097	62
121086-0098	62
121086-3007	62
121086-3008	62
121086-3009	62
121586-0033	62
121586-0034	62
121586-5067	63
121586-5068	63
121586-5069	63
121586-5229	63
121586-5230	63
121586-5231	63
121586-5232	63
121586-5253	62
121586-5253	63
121586-5257	62
121586-5257	63
225-0017-000	53
225-0018-000	53
225-0019-000	53
225-1000-000	53
225-8502-000	53
225-8503-000	53
225-8510-000	53
248-8501-000	52
248-8502-000	52
248-8503-000	52
248-8504-000	52
248-8505-000	52
248-8506-000	52
248-8507-000	52
248-8508-000	52
248-8509-000	52
248-8510-000	52
248-8511-000	52
248-8512-000	52
248-8513-000	52
248-8514-000	52
248-8515-000	52
248-8516-000	52
248-8517-000	52
248-8518-000	52
248-8519-000	52
248-8520-000	52
248-8521-000	52
248-8522-000	52
248-8523-000	52
248-8524-000	52
27977-12T8	62
27977-16T50	62

Dimensions shown in mm
Specifications and dimensions subject to change

Part Number	Page
330-8659-000	56
330-8659-006	56
330-8744-000	56
330-8744-006	56
600324	62
600325	62
980-8550-000	53
980-8551-000	53
980-8552-000	53
980-8553-000	53
980-8554-000	53
980-8555-000	53
980-8556-000	53
980-8557-000	53
980-8558-000	53
980-8559-000	53
980-8560-000	53
995-0001-585	62
995-0001-585	63
995-0001-684	63
995-0002-052	62
BM-2	63
CA121003-1	50
CA121003-10	50
CA121003-11	50
CA121003-1161	50
CA121003-1162	50
CA121003-1163	50
CA121003-1164	50
CA121003-1165	50
CA121003-1166	50
CA121003-1167	50
CA121003-1168	50
CA121003-1169	50
CA121003-1170	50
CA121003-1171	50
CA121003-1172	50
CA121003-12	50
CA121003-121	50
CA121003-122	50
CA121003-123	50
CA121003-124	50
CA121003-125	50
CA121003-126	50
CA121003-127	50
CA121003-128	50
CA121003-129	50
CA121003-130	50
CA121003-131	50
CA121003-132	50
CA121003-141	50
CA121003-142	50

Part Number	Page
CA121003-143	50
CA121003-144	50
CA121003-145	50
CA121003-146	50
CA121003-147	50
CA121003-148	50
CA121003-149	50
CA121003-150	50
CA121003-151	50
CA121003-152	50
CA121003-161	50
CA121003-162	50
CA121003-163	50
CA121003-164	50
CA121003-165	50
CA121003-166	50
CA121003-167	50
CA121003-168	50
CA121003-169	50
CA121003-170	50
CA121003-171	50
CA121003-172	50
CA121003-2	50
CA121003-3	50
CA121003-4	50
CA121003-5	50
CA121003-6	50
CA121003-7	50
CA121003-71	50
CA121003-72	50
CA121003-73	50
CA121003-74	50
CA121003-75	50
CA121003-76	50
CA121003-77	50
CA121003-78	50
CA121003-79	50
CA121003-8	50
CA121003-80	50
CA121003-81	50
CA121003-82	50
CA121003-9	50
CA121003-901	50
CA121003-902	50
CA121003-903	50
CA121003-904	50
CA121003-905	50
CA121003-906	50
CA121003-907	50
CA121003-908	50
CA121003-909	50
CA121003-910	50

Part Number	Page
CA121003-911	50
CA121003-912	50
CA121004-1	51
CA121004-10	51
CA121004-11	51
CA121004-1141	51
CA121004-1142	51
CA121004-1143	51
CA121004-1144	51
CA121004-1145	51
CA121004-1146	51
CA121004-1147	51
CA121004-1148	51
CA121004-1149	51
CA121004-1150	51
CA121004-1151	51
CA121004-1152	51
CA121004-1161	51
CA121004-1162	51
CA121004-1163	51
CA121004-1164	51
CA121004-1165	51
CA121004-1166	51
CA121004-1167	51
CA121004-1168	51
CA121004-1169	51
CA121004-1170	51
CA121004-1171	51
CA121004-1172	51
CA121004-12	51
CA121004-121	51
CA121004-122	51
CA121004-123	51
CA121004-124	51
CA121004-125	51
CA121004-126	51
CA121004-127	51
CA121004-128	51
CA121004-129	51
CA121004-130	51
CA121004-131	51
CA121004-132	51
CA121004-141	51
CA121004-143	51
CA121004-144	51
CA121004-145	51
CA121004-146	51
CA121004-147	51
CA121004-148	51
CA121004-149	51
CA121004-150	51
CA121004-151	51

Part Number	Page
CA121004-152	51
CA121004-161	51
CA121004-162	51
CA121004-163	51
CA121004-164	51
CA121004-165	51
CA121004-166	51
CA121004-167	51
CA121004-168	51
CA121004-169	51
CA121004-170	51
CA121004-171	51
CA121004-172	51
CA121004-2	51
CA121004-3	51
CA121004-4	51
CA121004-5	51
CA121004-6	51
CA121004-7	51
CA121004-71	51
CA121004-72	51
CA121004-73	51
CA121004-74	51
CA121004-75	51
CA121004-76	51
CA121004-77	51
CA121004-78	51
CA121004-79	51
CA121004-8	51
CA121004-80	51
CA121004-81	51
CA121004-82	51
CA121004-9	51
CA121004-901	51
CA121004-902	51
CA121004-903	51
CA121004-904	51
CA121004-905	51
CA121004-906	51
CA121004-907	51
CA121004-908	51
CA121004-909	51
CA121004-910	51
CA121004-911	51
CA121004-912	51
CA1t21004-142	51
CA3105E10SL-B	52
CA3105E12S-B	52
CA3105E14S-B	52
CA3105E16-B	52
CA3105E16S-B	52
CA3105E18-B	52

Dimensions shown in mm
Specifications and dimensions subject to change

Part Number	Page
CA3105E20-B	52
CA3105E22-B	52
CA3105E24-B	52
CA3105E28-B	52
CA3105E32-B	52
CA3105E36-B	52
CAB80-10SL-D	51
CAB80-12S-D	51
CAB80-14S-D	51
CAB80-16-D	51
CAB80-16S-D	51
CAB80-18-D	51
CAB80-20-D	51
CAB80-22-D	51
CAB80-24-D	51
CAB80-28-D	51
CAB80-32-D	51
CAB80-36-D	51
CAB81-10SL-D	50
CAB81-12S-D	50
CAB81-14S-D	50
CAB81-16-D	50
CAB81-16S-D	50
CAB81-18-D	50
CAB81-20-D	50
CAB81-22-D	50
CAB81-24-D	50
CAB81-28-D	50
CAB81-32-D	50
CAB81-36-D	50
CET-0	62
CET-4	62
CET-8	62
CET-F80-12	62
CET-F80-16	62
CET-F80-20	62
CIT0	62
CIT12	62
CIT16	62
CIT20	62
CIT4	62
CIT8	62
CIT-F80-12	62
CIT-F80-16	62
CIT-F80-20	62
HP400EL-ITT	62
HP400EL-ITT	63
HPW400U-ITT	62
HPW400U-ITT	63
M22520-1-01	62
M22520-1-01	63
M22520-3-1	63
MS3057-10A	54
MS3057-12A	54
MS3057-16A	54
MS3057-20A	54
MS3057-24A	54
MS3057-4A	54
MS3057-6A	54
MS3057-8A	54
TH452	62
VG95234B00	53
VG95234B04	53
VG95234B08	53
VG95234B12	53
VG95234B16	53
VG95234B16S	53
VG95234B20	53
VG95234BOD10SL	52
VG95234BOD14S	52
VG95234BOD16	52
VG95234BOD16S	52
VG95234BOD18	52
VG95234BOD20	52
VG95234BOD22	52
VG95234BOD24	52
VG95234BOD28	52
VG95234BOD32	52
VG95234BOD36	52
VG95234DA10SL-X	55
VG95234DA14S-X	55
VG95234DA16-X	55
VG95234DA18-X	55
VG95234DA20-X	55
VG95234DA22-X	55
VG95234DA24-X	55
VG95234DA28-X	55
VG95234DA32-X	55
VG95234DA36-X	55
VG95234DH10SL-X	55
VG95234DH14S-X	55
VG95234DH16-X	55
VG95234DH18-X	55
VG95234DH20-X	55
VG95234DH22-X	55
VG95234DH24-X	55
VG95234DH28-X	55
VG95234DH32-X	55
VG95234DH36-X	55
VG95234KA10SL	50
VG95234KA14S	50
VG95234KA16	50
VG95234KA16S	50
VG95234KA18	50
VG95234KA20	50
VG95234KA22	50
VG95234KA24	50
VG95234KA28	50
VG95234KA32	50
VG95234KA36	50
VG95234KB10SL	51
VG95234KB14S	51
VG95234KB16	51
VG95234KB16S	51
VG95234KB18	51
VG95234KB20	51
VG95234KB22	51
VG95234KB24	51
VG95234KB28	51
VG95234KB32	51
VG95234KB36	51
VG95234KC10SL	51
VG95234KC14S	51
VG95234KC16	51
VG95234KC16S	51
VG95234KC18	51
VG95234KC20	51
VG95234KC22	51
VG95234KC24	51
VG95234KC28	51
VG95234KC32	51
VG95234KC36	51
VG95234KK10	54
VG95234KK12	54
VG95234KK16	54
VG95234KK20	54
VG95234KK24	54
VG95234KK4	54
VG95234KK6	54
VG95234KK8	54
VG95234KR10SL	50
VG95234KR14S	50
VG95234KR16	50
VG95234KR16S	50
VG95234KR18	50
VG95234KR20	50
VG95234KR22	50
VG95234KR24	50
VG95234KR28	50
VG95234KR32	50
VG95234KR36	50
VG95234KT10SL	54
VG95234KT14S	54
VG95234KT16	54
VG95234KT18	54
VG95234KT20	54
VG95234KT24	54
VG95234KT32	54
VG95234KT36	54
VG95234P0	56
VG95234P10	56
VG95234P100	56
VG95234P10-001	56
VG95234P15	56
VG95234P15-001	56
VG95234P15-002	56
VG95234P15S	56
VG95234P15S-001	56
VG95234P15S-002	56
VG95234P160	56
VG95234P160-001	56
VG95234P25	56
VG95234P25-001	56
VG95234P4	56
VG95234P500	56
VG95234P500-001	56
VG95234P500-002	56
VG95234P60	56
VG95234P60-001	56
VG95234P8	56
VG95234S0	57
VG95234S10	57
VG95234S100	57
VG95234S10-001	57
VG95234S15	57
VG95234S15-001	57
VG95234S15-002	57
VG95234S15S	57
VG95234S15S-001	57
VG95234S15S-002	57
VG95234S160	57
VG95234S160-001	57
VG95234S25	57
VG95234S25-001	57
VG95234S4	57
VG95234S500	57
VG95234S500-001	57
VG95234S500-002	57
VG95234S60	57
VG95234S60-001	57
VG95234S8	57
WA10	63
WA27F-CE	63

Dimensions shown in mm
Specifications and dimensions subject to change

Product Safety Information

cannon

This note must be read in conjunction with the Product Data Sheet / Catalog. Failure to observe the advice in this information sheet and the operating conditions specified in the Product Data Sheet/ Catalog could result in hazardous situations.

1. Material content and physical form

Electrical connectors do not usually contain hazardous materials. They contain conducting and non-conducting materials and can be divided into two groups.

a) Printed circuit types and low cost audio types which employ all plastic insulators and casings.

b) Rugged, Fire Barrier and High Reliability types with metal casings and either natural rubber, synthetic rubber, plastic or glass insulating materials. Contact materials vary with type of connector and also application and are usually manufactured from either: Copper, copper alloys, nickel, alumel, chromel or steel. In special applications, other alloys may be specified.

2. Fire characteristics and electric shock hazard

There is no fire hazard when the connector is correctly wired and used within the specified parameters. Incorrect wiring or assembly of the connector or careless use of metal tools or conductive fluids, or transit damage to any of the component parts may cause electric shock or burns. Live circuits must not be broken by separating mated connectors as this may cause arcing, ionization and burning.

Heat dissipation is greater at maximum resistance in a circuit. Hot spots may occur when resistance is raised locally by damage, e.g. cracked or deformed contacts, broken strands of wire.

Local overheating may also result from the use of the incorrect application tools or from poor quality soldering or slack screw terminals. Overheating may occur if the ratings in the product Data Sheet / Catalog are exceeded and can cause breakdown of insulation and hence electric shock. If heating is allowed to continue it intensifies by further increasing the local resistance through loss of temper of spring contacts, formation of oxide film on contacts and wires and leakage currents through carbonization of insulation and tracking paths. Fire can then result in the presence of combustible materials and this may release noxious fumes. Overheating may not be visually apparent. Burns may result from touching overheated components.

3. Handling

Care must be taken to avoid damage to any component parts of electrical connectors during installation and use. Although there are normally no sharp edges, care must be taken when handling certain components to avoid injury to fingers. Electrical connectors may be damaged in transit to the customer, and damage may create hazards. Products should therefore be examined prior to installation / use and rejected if found to be damaged.

4. Disposal

Incineration of certain materials may release noxious or even toxic fumes.

5. Application

Connectors with exposed contacts should not be selected for use on the current supply side of an electrical circuit, because an electric shock could result from touching exposed contacts on an unmated connector. Voltages in excess of 30 V ac or 42.5 V dc are potentially hazardous and care should be taken to ensure that such voltages cannot be transmitted in any way to exposed metal parts of the connector body.

The connector and wiring should be checked, before making live, to have no damage to metal parts or insulators, no solder blobs, loose strands, conducting lubricants, swarf, or any other undesired conducting particles. Circuit resistance and continuity check should be made to make certain that there are no high resistance joints or spurious conducting paths.

Always use the correct application tools as specified in the Data Sheet / Catalog. Do not permit untrained personnel to wire, assemble or tamper with connectors. For operation voltage please see appropriate national regulations.

Important general information

(i) Air and creepage paths/Operating voltage. The admissible operating voltages depend on the individual applications and the valid national and other applicable safety regulations.

For this reason the air and creepage path data are only reference values. Observe reduction of air and creepage paths due to PC board and/or harnessing.

(ii) Temperature. All information given are temperature limits. The operation temperature depends on the individual application.

(iii) Other important information. Cannon continuously endeavors to improve their products. Therefore, Cannon products may deviate from the description, technical data and shape as shown in this catalog and data sheets.

Dimensions shown in mm
Specifications and dimensions subject to change

Connect with your ITT Cannon representative today or visit us at www.ittcannon.com

Connect with the experts

ITT Cannon is a world leader in the design and manufacture of highly engineered connector solutions for multiple end markets.

ENGINEERED FOR LIFE

North America
56 Technology Drive
Irvine, CA 92618
Phone: +1.800.854.3028

Europe
Italy
Corso Europa 41/43
20020 Lainate (MI) Italy
Phone: +39.02938721

Germany
Cannonstrasse 1
71384 Weinstadt, Germany
Phone: +49.7151.699.0

Asia
Tuopandun Industrial Area, Jinda Cheng,
Xiner Village, Shajing Town, Boan District,
Shenzhen City, Guangdong Province, China 518215
Phone: +86.755.2726.7888

The "ITT Engineered Blocks" symbol, "Engineered for life", "ITT" and "Cannon" are registered trademarks of ITT Inc.
Specification and other data are based on information available at the time of printing, and are subject to change without notice.

© 2019 ITT Inc.

ITT Cannon CAB Cat 092019