SMDA05C THRU SMDA24C
Bidirectional TVS Array for Protection of Four Lines

PROTECTION PRODUCTS

Description

The SMDAxxC series of TVS arrays are designed to provide bidirectional protection for sensitive electronics from damage or latch-up due to ESD, lightning and other voltage-induced transient events. Each device will protect four data or I/O lines. They are available with operating voltages of 5V, 12V, 15V and 24V.

TVS diodes are solid-state devices designed specifically for transient suppression. They offer desirable characteristics for board level protection including fast response time, low operating and clamping voltage and no device degradation. The low profile SO-8 package allows the user to protect up to four independent lines with one package. The SMDAxxC series is suitable protection for sensitive semiconductors components such as microprocessors, ASICs, transceivers, transducers, and CMOS memory.

The SMDAxxC series devices may be used to meet the ESD immunity requirements of IEC 61000-4-2, level 4 for air and contact discharge.

Features

- Transient protection for data lines to
  IEC 61000-4-2 (ESD) ±15kV (air), ±8kV (contact)
  IEC 61000-4-4 (EFT) 40A (5/50ns)
  IEC 61000-4-5 (Lightning) 12A (8/20µs)
- Bidirectional protection
- Small SO-8 package
- Protects four I/O lines
- Working voltages: 5V, 12V, 15V and 24V
- Low leakage current
- Low operating and clamping voltages
- Solid-state silicon avalanche technology

Mechanical Characteristics

- JEDEC SO-8 package
- Molding compound flammability rating: UL 94V-0
- Marking : Part number, date code, logo
- Packaging : Tube or Tape and Reel per EIA 481

Applications

- Data and I/O Lines
- Microprocessor based equipment
- Notebooks, Desktops, and Servers
- Instrumentation
- LAN/WAN equipment
- Peripherals
- Serial and Parallel Ports

Schematic & PIN Configuration

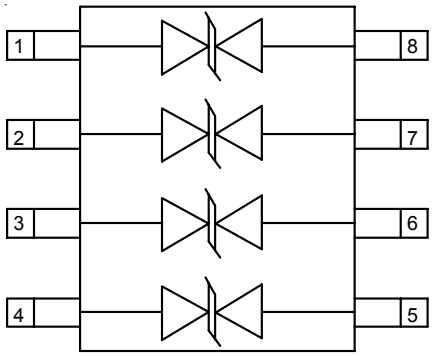

SO-8 (Top View)

Absolute Maximum Rating

Rating	Symbol	Value	Units
Peak Pulse Power (tp = 8/20µs)	P_{pk}	300	Watts
ESD Voltage (HBM per IEC 61000-4-2)	V_{ESD}	>25	kV
Lead Soldering Temperature	T_L	260 (10 sec.)	°C
Operating Temperature	T_J	-55 to +125	°C
Storage Temperature	T_{STG}	-55 to +150	°C

Electrical Characteristics (T=25°C)

SMDA05C

Parameter	Symbol	Conditions	Minimum	Typical	Maximum	Units
Reverse Stand-Off Voltage	V_{RWM}				5	V
Reverse Breakdown Voltage	V_{BR}	I_t = 1mA	6			V
Reverse Leakage Current	I_R	V_{RWM} = 5V, T=25°C			20	µA
Clamping Voltage	V_C	I_{PP} = 1A, tp = 8/20µs			9.8	V
Clamping Voltage	V_C	I_{PP} = 5A, tp = 8/20µs			11	V
Maximum Peak Pulse Current	I_{PP}	tp = 8/20µs			17	A
Junction Capacitance	C_j	V_R = 0V, f = 1MHz			350	pF

SMDA12C

Parameter	Symbol	Conditions	Minimum	Typical	Maximum	Units
Reverse Stand-Off Voltage	V_{RWM}				12	V
Reverse Breakdown Voltage	V_{BR}	I_t = 1mA	13.3			V
Reverse Leakage Current	I_R	V_{RWM} = 12V, T=25°C			1	µA
Clamping Voltage	V_C	I_{PP} = 1A, tp = 8/20µs			19	V
Clamping Voltage	V_C	I_{PP} = 5A, tp = 8/20µs			24	V
Maximum Peak Pulse Current	I_{PP}	tp = 8/20µs			12	A
Junction Capacitance	C_j	V_R = 0V, f = 1MHz			120	pF

© 2005 Semtech Corp.

Electrical Characteristics *(Continued)*

SMDA15C

Parameter	Symbol	Conditions	Minimum	Typical	Maximum	Units
Reverse Stand-Off Voltage	V_{RWM}				15	V
Reverse Breakdown Voltage	V_{BR}	I_t = 1mA	16.7			V
Reverse Leakage Current	I_R	V_{RWM} = 15V, T=25°C			1	µA
Clamping Voltage	V_C	I_{PP} = 1A, tp = 8/20µs			24	V
Clamping Voltage	V_C	I_{PP} = 5A, tp = 8/20µs			30	V
Maximum Peak Pulse Current	I_{PP}	tp = 8/20µs			10	A
Junction Capacitance	C_j	V_R = 0V, f = 1MHz			75	pF

SMDA24C

Parameter	Symbol	Conditions	Minimum	Typical	Maximum	Units
Reverse Stand-Off Voltage	V_{RWM}				24	V
Reverse Breakdown Voltage	V_{BR}	I_t = 1mA	26.7			V
Reverse Leakage Current	I_R	V_{RWM} = 24V, T=25°C			1	µA
Clamping Voltage	V_C	I_{PP} = 1A, tp = 8/20µs			43	V
Clamping Voltage	V_C	I_{PP} = 5A, tp = 8/20µs			55	V
Maximum Peak Pulse Current	I_{PP}	tp = 8/20µs			5	A
Junction Capacitance	C_j	V_R = 0V, f = 1MHz			50	pF

© 2005 Semtech Corp.

Typical Characteristics

Non-Repetitive Peak Pulse Power vs. Pulse Time

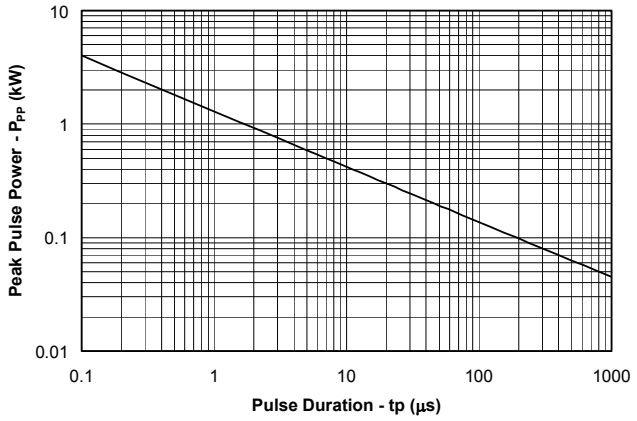

Power Derating Curve

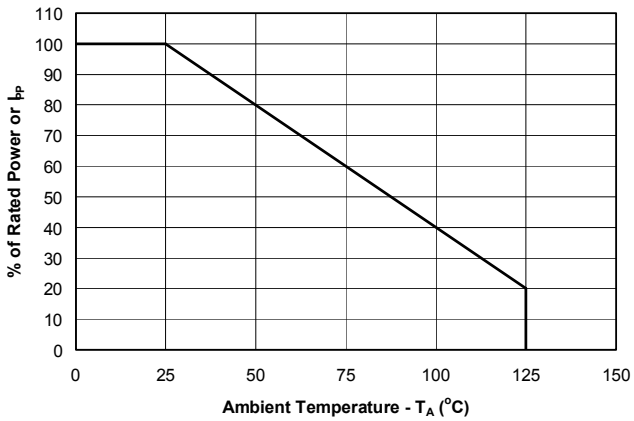

Pulse Waveform

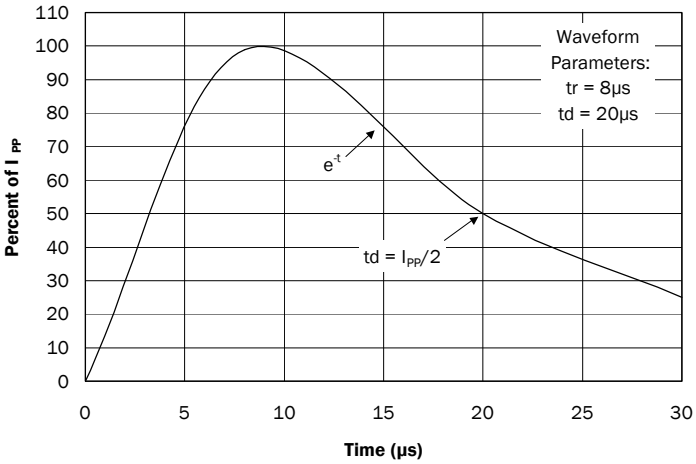

ESD Pulse Waveform (IEC 61000-4-2)

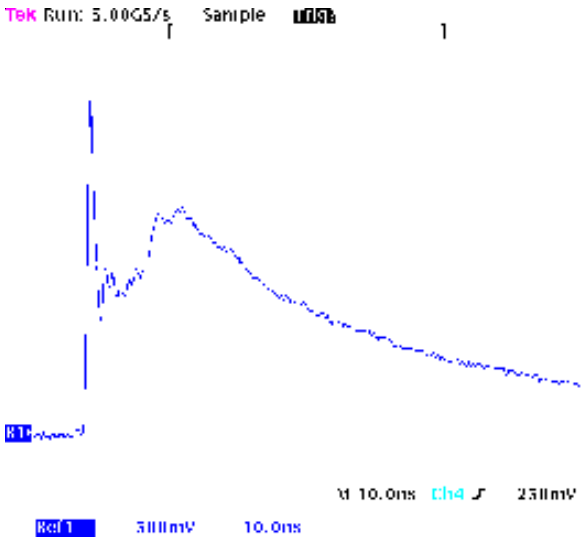

IEC 61000-4-2 Discharge Parameters

Level	First Peak Current (A)	Peak Current at 30 ns (A)	Peak Current at 60 ns (A)	Test Voltage (Contact Discharge) (kV)	Test Voltage (Air Discharge) (kV)
1	7.5	4	8	2	2
2	15	8	4	4	4
3	22.5	12	6	6	8
4	30	16	8	8	15

Applications Information

Device Connection for Protection of Four Data Lines

The SMDAxxC series of devices are designed to protect up to four data lines. The devices are connected as follows:

- The SMDAxxC are bidirectional devices and are designed for use on lines where the normal operating voltage is above and below ground. Pins 1, 2, 3, and 4 are connected to the protected lines. Pins 5, 6, 7, and 8 are connected to ground. Since the device is electrically symmetrical, these connections may be reversed. The ground connections should be made directly to the ground plane for best results. The path length is kept as short as possible to reduce the effects of parasitic inductance in the board traces.

Circuit Board Layout Recommendations for Suppression of ESD.

Good circuit board layout is critical for the suppression of ESD induced transients. The following guidelines are recommended:

- Place the TVS near the input terminals or connectors to restrict transient coupling.
- Minimize the path length between the TVS and the protected line.
- Minimize all conductive loops including power and ground loops.
- The ESD transient return path to ground should be kept as short as possible.
- Never run critical signals near board edges.
- Use ground planes whenever possible.

Matte Tin Lead Finish

Matte tin has become the industry standard lead-free replacement for SnPb lead finishes. A matte tin finish is composed of 100% tin solder with large grains. Since the solder volume on the leads is small compared to the solder paste volume that is placed on the land pattern of the PCB, the reflow profile will be determined by the requirements of the solder paste. Therefore, these devices are compatible with both lead-free and SnPb assembly techniques. In addition, unlike other lead-free compositions, matte tin does not have any added alloys that can cause degradation of the solder joint.

Circuit Diagram

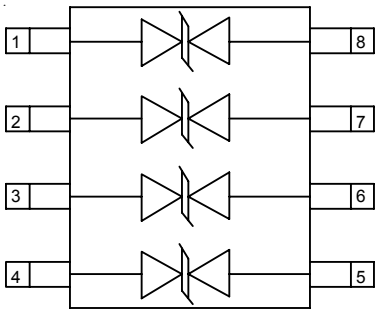

I/O Line Protection

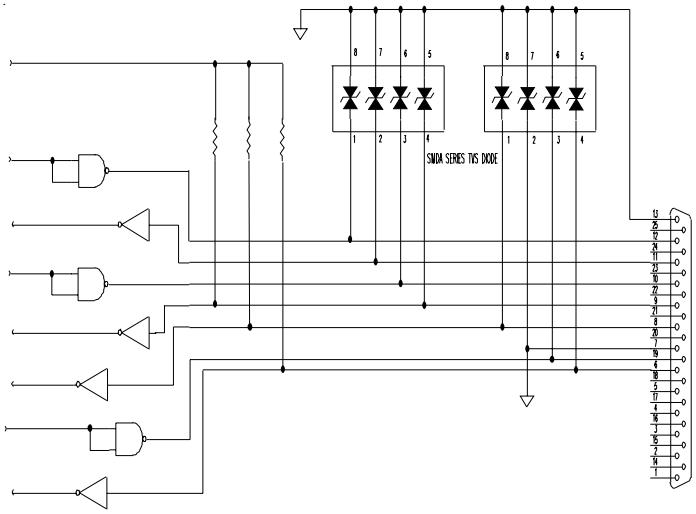

Typical Connection

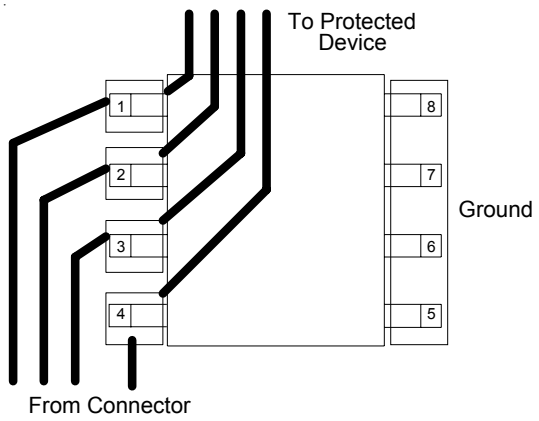

PROTECTION PRODUCTS

Outline Drawing - SO-8

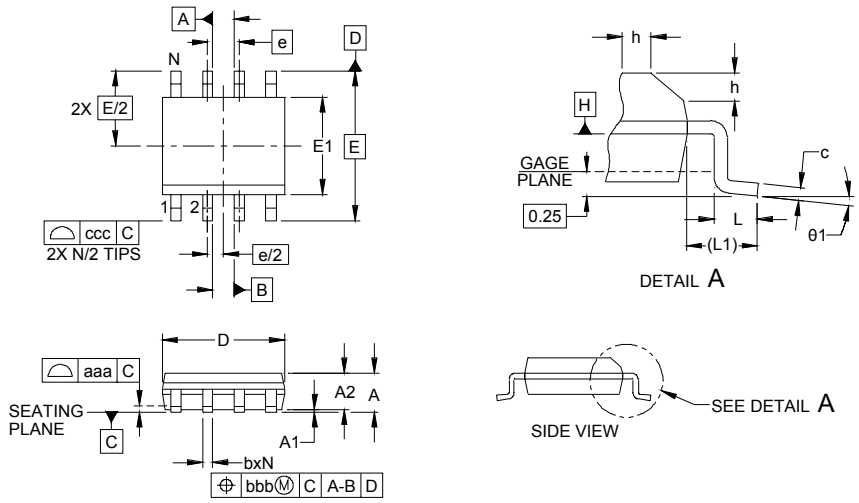

DIMENSIONS						
DIM	INCHES			MILLIMETERS		
	MIN	NOM	MAX	MIN	NOM	MAX
A	.053	-	.069	1.35	-	1.75
A1	.004	-	.010	0.10	-	0.25
A2	.049	-	.065	1.25	-	1.65
b	.012	-	.020	0.31	-	0.51
c	.007	-	.010	0.17	-	0.25
D	.189	.193	.197	4.80	4.90	5.00
E1	.150	.154	.157	3.80	3.90	4.00
E	.236 BSC			6.00 BSC		
e	.050 BSC			1.27 BSC		
h	.010	-	.020	0.25	-	0.50
L	.016	.028	.041	0.40	0.72	1.04
L1	(.041)			(1.04)		
N	8			8		
θ1	0°	-	8°	0°	-	8°
aaa	.004			0.10		
bbb	.010			0.25		
ccc	.008			0.20		

NOTES:

1. CONTROLLING DIMENSIONS ARE IN MILLIMETERS (ANGLES IN DEGREES).
2. DATUMS -A- AND -B- TO BE DETERMINED AT DATUM PLANE -H-
3. DIMENSIONS "E1" AND "D" DO NOT INCLUDE MOLD FLASH, PROTRUSIONS OR GATE BURRS.
4. REFERENCE JEDEC STD MS-012, VARIATION AA.

Land Pattern - SO-8

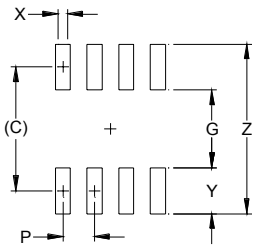

DIMENSIONS		
DIM	INCHES	MILLIMETERS
C	(.205)	(5.20)
G	.118	3.00
P	.050	1.27
X	.024	0.60
Y	.087	2.20
Z	.291	7.40

NOTES:

1. THIS LAND PATTERN IS FOR REFERENCE PURPOSES ONLY. CONSULT YOUR MANUFACTURING GROUP TO ENSURE YOUR COMPANY'S MANUFACTURING GUIDELINES ARE MET.
2. REFERENCE IPC-SM-782A, RLP NO. 300A.

Ordering Information

Part Number	Working Voltage	Lead Finish	Qty per Reel	Reel Size
SMDA05C.TB	5	SnPb	500	7 Inch
SMDA12C.TB	12	SnPb	500	7 Inch
SMDA15C.TB	15	SnPb	500	7 Inch
SMDA24C.TB	24	SnPb	500	7 Inch
SMDA05C.TBT	5	Pb Free	500	7 Inch
SMDA12C.TBT	12	Pb Free	500	7 Inch
SMDA15C.TBT	15	Pb Free	500	7 Inch
SMDA24C.TBT	24	Pb Free	500	7 Inch
SMDA05C	5	SnPb	95/Tube	N/A
SMDA12C	12	SnPb	95/Tube	N/A
SMDA15C	15	SnPb	95/Tube	N/A
SMDA24C	24	SnPb	95/Tube	N/A
SMDA05C.T	5	Pb Free	95/Tube	N/A
SMDA12C.T	12	Pb Free	95/Tube	N/A
SMDA15C.T	15	Pb Free	95/Tube	N/A
SMDA24C.T	24	Pb Free	95/Tube	N/A

Contact Information

Semtech Corporation
Protection Products Division
200 Flynn Road, Camarillo, CA 93012
Phone: (805)498-2111 FAX (805)498-3804