ADVANCED POWER TECHNOLOGY®

ARF463AP1 ARF463BP1
ARF463AP1G* ARF463BP1G*

***G Denotes RoHS Compliant, Pb Free Terminal Finish.**

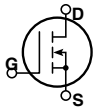

Common Source

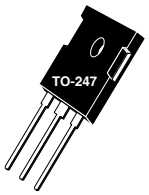

RF POWER MOSFETs

N-CHANNEL ENHANCEMENT MODE

125V 100W 100MHz

The ARF463AP1 and ARF463BP1 comprise a symmetric pair of common source RF power transistors designed for push-pull scientific, commercial, medical and industrial RF power amplifier applications up to 100MHz. They have been optimized for both linear and high efficiency classes of operation.

- **Specified 125 Volt, 81.36MHz Characteristics:**
  - **Output Power = 100 Watts.**
  - **Gain = 15dB (Class AB)**
  - **Efficiency = 75% (Class C)**
- **Low Cost Common Source RF Package.**
- **Low Vth thermal coefficient.**
- **Low Thermal Resistance.**
- **Optimized SOA for Superior Ruggedness.**

MAXIMUM RATINGS All Ratings: T_C = 25°C unless otherwise specified.

Symbol	Parameter	ARF463A_BP1(G)	UNIT
V_{DSS}	Drain-Source Voltage	500	Volts
V_{DGO}	Drain-Gate Voltage	500	
I_D	Continuous Drain Current @ T_C = 25°C	9	Amps
V_{GS}	Gate-Source Voltage	±30	Volts
P_D	Total Power Dissipation @ T_C = 25°C	180	Watts
$R_{\theta JC}$	Junction to Case	0.70	°C/W
T_J,T_{STG}	Operating and Storage Junction Temperature Range	-55 to 150	°C
T_L	Lead Temperature: 0.063" from Case for 10 Sec.	300	

STATIC ELECTRICAL CHARACTERISTICS

Symbol	Characteristic / Test Conditions	MIN	TYP	MAX	UNIT
BV_{DSS}	Drain-Source Breakdown Voltage (V_{GS} = 0V, I_D = 250 µA)	500			Volts
V_{DS}(ON)	On State Drain Voltage ① (I_D(ON) = 4.5A, V_{GS} = 10V)			5.0	
I_{DSS}	Zero Gate Voltage Drain Current (V_{DS} = V_{DSS}, V_{GS} = 0V)			25	µA
	Zero Gate Voltage Drain Current (V_{DS} = 0.8 V_{DSS}, V_{GS} = 0V, T_C = 125°C)			250	
I_{GSS}	Gate-Source Leakage Current (V_{GS} = ±30V, V_{DS} = 0V)			±100	nA
g_{fs}	Forward Transconductance (V_{DS} = 25V, I_D = 4.5A)	2	3	4	mhos
V_{GS}(TH)	Gate Threshold Voltage (V_{DS} = V_{GS}, I_D = 50mA)	3		5	Volts

CAUTION: These Devices are Sensitive to Electrostatic Discharge. Proper Handling Procedures Should Be Followed.

DYNAMIC CHARACTERISTICS

Symbol	Characteristic	Test Conditions	MIN	TYP	MAX	UNIT
C_{iss}	Input Capacitance	V_{GS} = 0V V_{DS} = 50V f = 1 MHz		670		pF
C_{oss}	Output Capacitance			120		
C_{rss}	Reverse Transfer Capacitance			50		
$t_{d(on)}$	Turn-on Delay Time	V_{GS} = 15V V_{DD} = 0.5 V_{DSS} I_D = $I_{D[Cont.]}$ @ 25°C R_G = 1.6Ω		5.6		ns
t_r	Rise Time			4.3		
$t_{d(off)}$	Turn-off Delay Time			13.5		
t_f	Fall Time			4.2		

FUNCTIONAL CHARACTERISTICS

Symbol	Characteristic	Test Conditions	MIN	TYP	MAX	UNIT
G_{PS}	Common Source Amplifier Power Gain	f = 81.36 MHz V_{GS} = 0V V_{DD} = 125V P_{out} = 100W	13	15		dB
η	Drain Efficiency		70	75		%
ψ	Electrical Ruggedness VSWR 10:1		No Degradation in Output Power			

① Pulse Test: Pulse width < 380 µS, Duty Cycle < 2%

APT Reserves the right to change, without notice, the specifications and information contained herein.

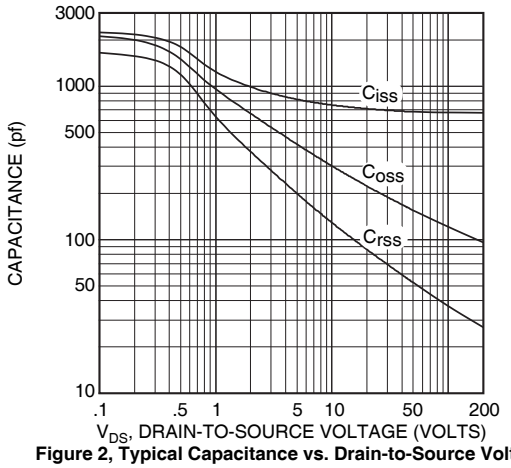

Figure 2, Typical Capacitance vs. Drain-to-Source Voltage

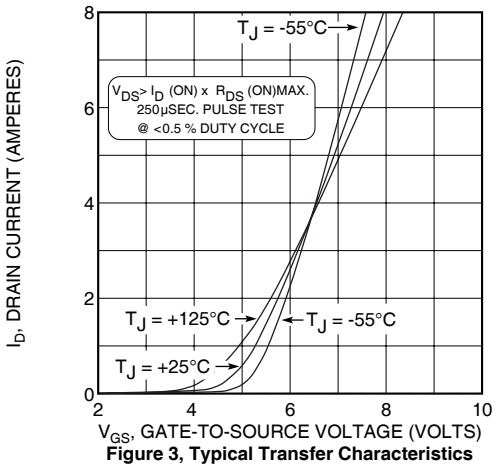

Figure 3, Typical Transfer Characteristics

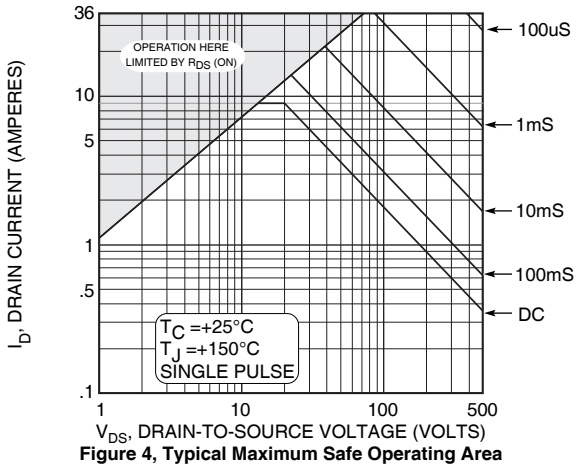

Figure 4, Typical Maximum Safe Operating Area

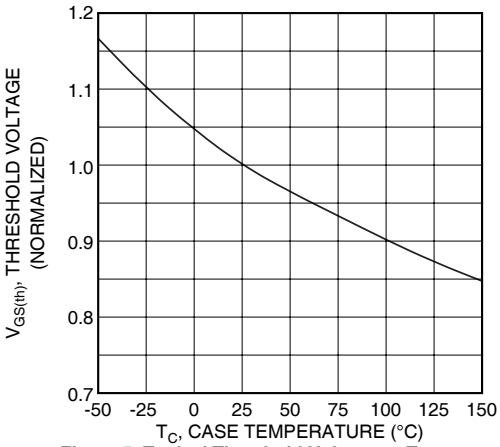

Figure 5, Typical Threshold Voltage vs Temperature

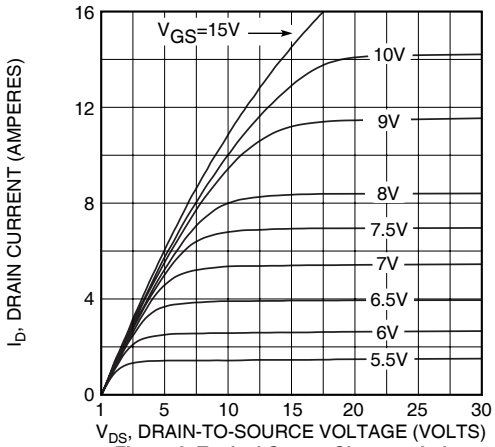

Figure 6, Typical Output Characteristics

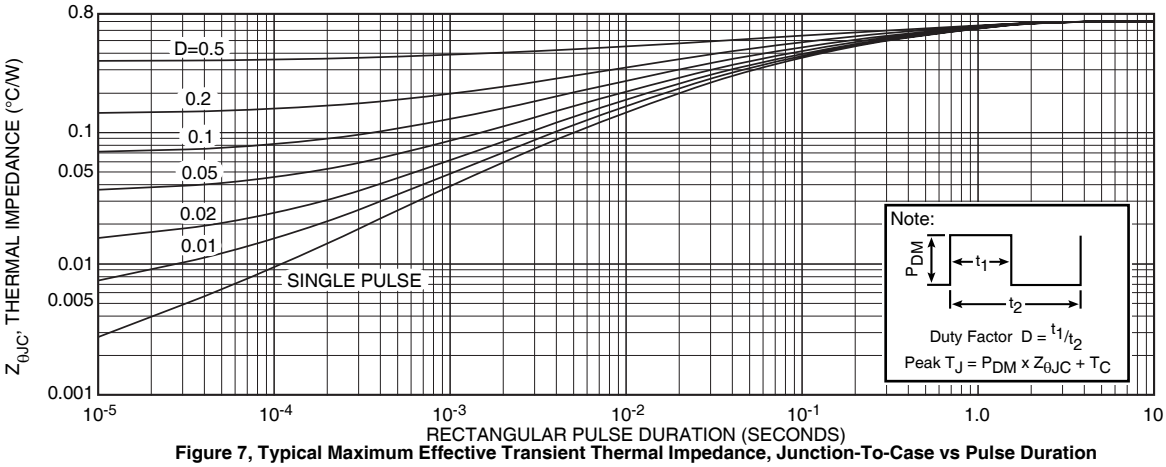

Figure 7, Typical Maximum Effective Transient Thermal Impedance, Junction-To-Case vs Pulse Duration

Table 1 - Typical Class AB Large Signal Input - Output Impedance

Freq. (MHz)	Z_{in} (Ω)	Z_{OL} (Ω)
2.0	24 - j 5.0	55 - j 4.8
13.5	7.8 - j 11	41 - j 24
27	2.1 - j 6.4	23 - j 26.2
40	.74 - j 3.3	13.6 - j 22
65	.30 + j .42	6.1 - j 14.2
80	.46 + j 2.0	4.2 - j 10.7
100	.87 + j 3.7	2.7 - j 7.1

Z_{in} - Gate shunted with 25Ω I_{DQ} = 50mA
Z_{OL} - Conjugate of optimum load for 100 Watts output at V_{dd} = 125V

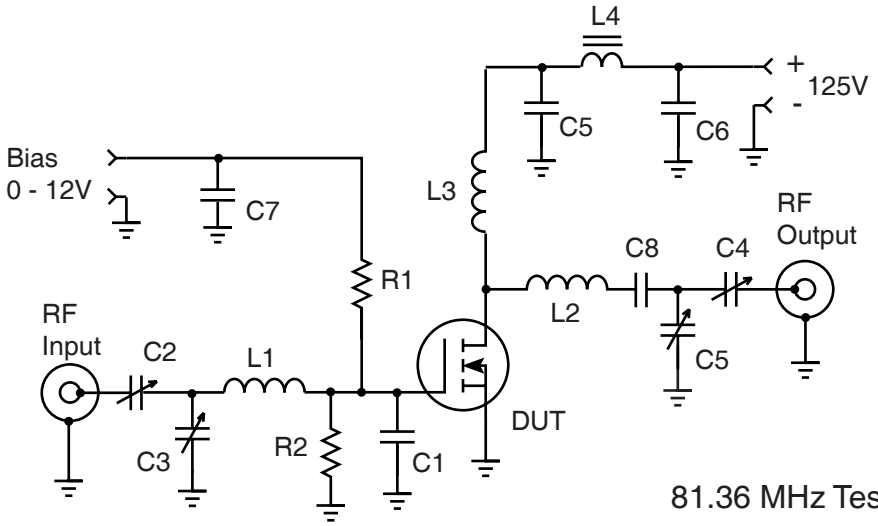

C1 -- 820pF Unelco mounted at gate lead
C2-C5 -- Arco 463 Mica trimmer
C5-C8 -- 10nF 500V COG chip
L1 -- 3t #18 .3" ID .25"L ~50nH
L2 -- 3t #16 AWG .25" ID .3"L ~58nH
L3 -- 10t #18 AWG .25 ID ~470nH
L4 -- VK200-4B ferrite choke ~3uH
R1-R2 -- 50 Ohm 1/2W Carbon
DUT = ARF463A/B

81.36 MHz Test Circuit

TO-247 Package Outline

(e3) 100% Sn Plated

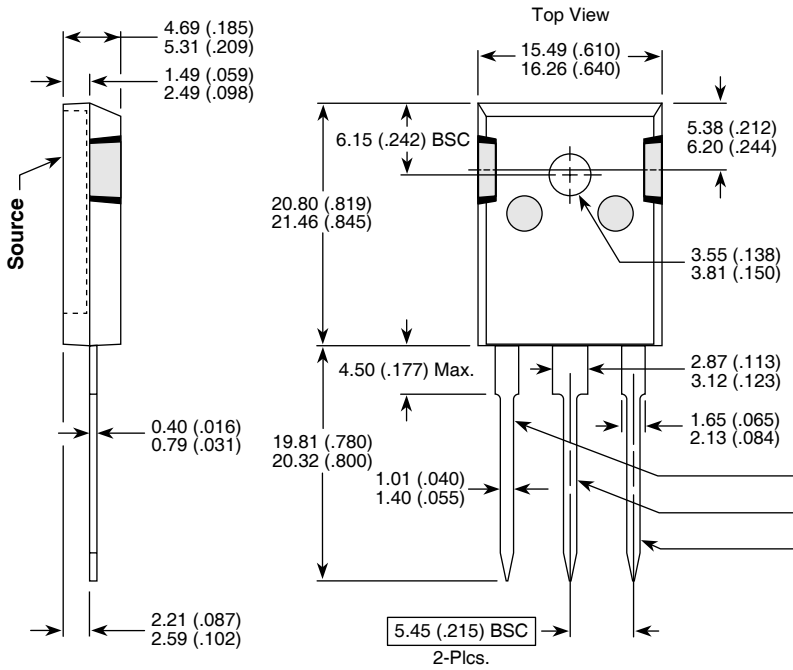

Dimensions in Millimeters and (Inches)

NOTE: These two parts comprise a symmetric pair of RF power transistors and meet the same electrical specifications. The device pin-outs are the mirror image of each other to allow ease of use as a push-pull pair.

Device	
ARF - A**P1**	ARF - B**P1**
Gate	Drain
Source	Source
Drain	Gate