VRF151
VRF151MP

50V, 150W, 175MHz

RF POWER VERTICAL MOSFET

The VRF151 is a gold-metallized silicon n-channel RF power transistor designed for broadband commercial and military applications requiring high power and gain without compromising reliability, ruggedness, or inter-modulation distortion.

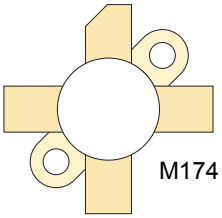

FEATURES

- **Improved Ruggedness $V_{(BR)DSS}$ = 170V**
- **150W with 22dB Typical Gain @ 30MHz, 50V**
- **150W with 14dB Typical Gain @ 175MHz, 50V**
- **Excellent Stability & Low IMD**
- **Common Source Configuration**
- **Available in Matched Pairs**
- **70:1 Load VSWR Capability at Specified Operating Conditions**
- **Nitride Passivated**
- **Refractory Gold Metallization**
- **High Voltage Replacement for MRF151**
- **RoHS Compliant**

Maximum Ratings

All Ratings: T_C =25°C unless otherwise specified

Symbol	Parameter	VRF151(MP)	Unit
V_{DSS}	Drain-Source Voltage	170	V
I_D	Continuous Drain Current @ T_C = 25°C	16	A
V_{GS}	Gate-Source Voltage	±40	V
P_D	Total Device dissipation @ T_C = 25°C	300	W
T_{STG}	Storage Temperature Range	-65 to 150	°C
T_J	Operating Junction Temperature	200	

Static Electrical Characteristics

Symbol	Parameter	Min	Typ	Max	Unit
$V_{(BR)DSS}$	Drain-Source Breakdown Voltage (V_{GS} = 0V, I_D = 100mA)	170	180		V
$V_{DS(ON)}$	On State Drain Voltage ($I_{D(ON)}$ = 10A, V_{GS} = 10V)		2.0	3.0	
I_{DSS}	Zero Gate Voltage Drain Current (V_{DS} = 100V, V_{GS} = 0V)			1	mA
I_{GSS}	Gate-Source Leakage Current (V_{GS} = ±20V, V_{DS} = 0V)			1.0	µA
g_{fs}	Forward Transconductance (V_{DS} = 10V, I_D = 5A)	5.0			mhos
$V_{GS(TH)}$	Gate Threshold Voltage (V_{DS} = 10V, I_D = 100mA)	2.9	3.6	4.4	V

Thermal Characteristics

Symbol	Characteristic	Min	Typ	Max	Unit
$R_{\theta JC}$	Junction to Case Thermal Resistance			0.60	°C/W

CAUTION: These Devices are Sensitive to Electrostatic Discharge. Proper Handling Procedures Should Be Followed.

Dynamic Characteristics

Symbol	Parameter	Test Conditions	Min	Typ	Max	Unit
C_{iss}	Input Capacitance	V_{GS} = 0V		375		pF
C_{oss}	Output Capacitance	V_{DS} = 150V		200		
C_{rss}	Reverse Transfer Capacitance	f = 1MHz		12		

Functional Characteristics

Symbol	Parameter	Min	Typ	Max	Unit
G_{PS}	f_1 = 30MHz, f_2 = 30.001MHz, V_{DD} = 50V, I_{DQ} = 250mA, P_{out} = 150W_{PEP} [1]	18	22		dB
G_{PS}	f = 175MHz, V_{DD} = 50V, I_{DQ} = 250mA, P_{out} = 150W		14		
η_D	f_1 = 30MHz, f_2 = 30.001MHz, V_{DD} = 50V, I_{DQ} = 250mA, P_{out} = 150W_{PEP} [1]		50		%
$IMD_{(d3)}$	f_1 = 30MHz, f_2 = 30.001MHz, V_{DD} = 50V, I_{DQ} = 250mA, P_{out} = 150W_{PEP} [1]		-30		dBc
ψ	f_1 = 50MHz, V_{DD} = 50V, I_{DQ} = 250mA, P_{out} = 150W CW 70:1 VSWR - All Phase Angles , 0.2mSec X 20% Duty Factor	No Degradation in Output Power			

1. To MIL-STD-1311 Version A, test method 2204B, Two Tone, Reference Each Tone

Microsemi reserves the right to change, without notice, the specifications and information contained herein.

Typical Performance Curves

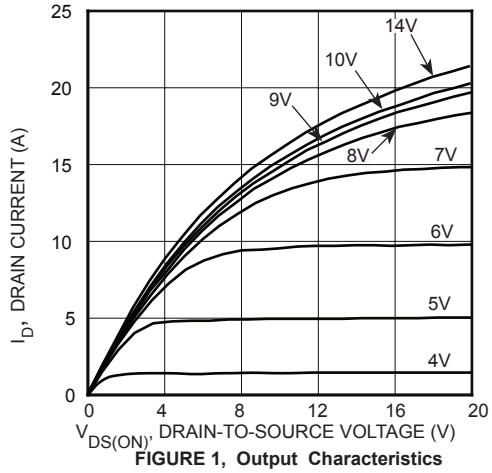

FIGURE 1, Output Characteristics

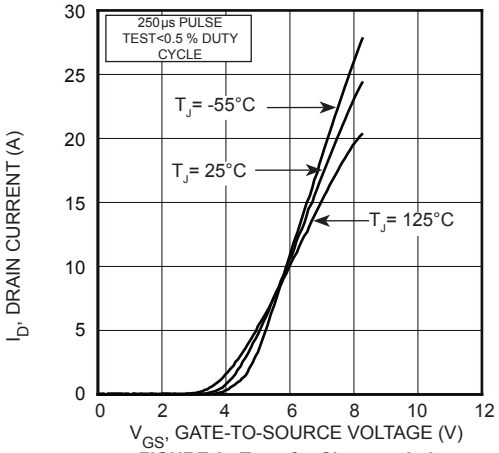

FIGURE 2, Transfer Characteristics

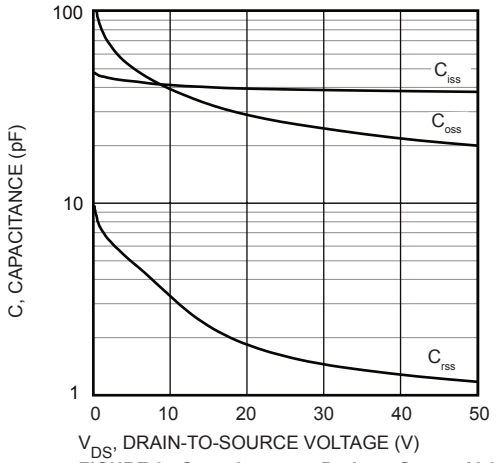

FIGURE 3, Capacitance vs Drain-to-Source Voltage

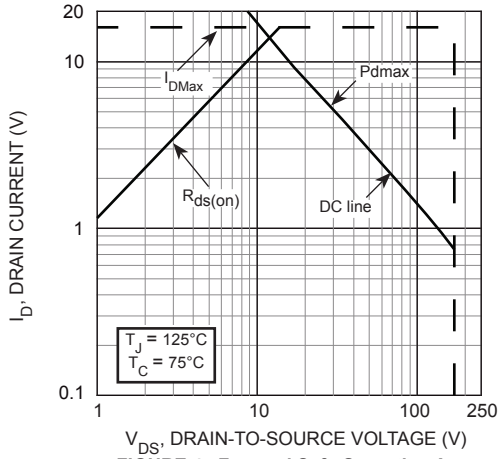

FIGURE 4, Forward Safe Operating Area

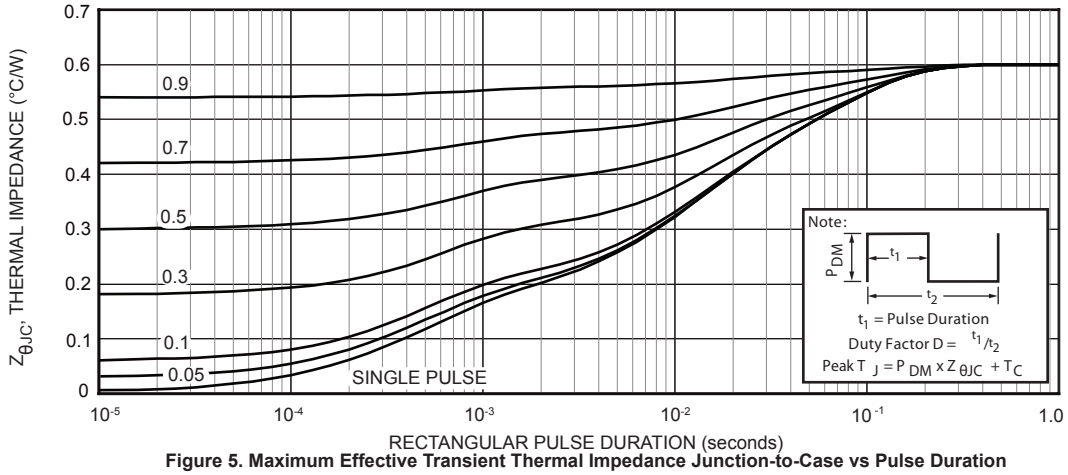

Figure 5. Maximum Effective Transient Thermal Impedance Junction-to-Case vs Pulse Duration

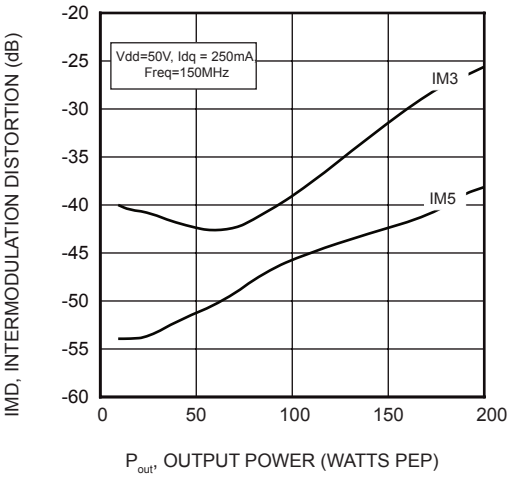

Figure 6. IMD versus P_{OUT}

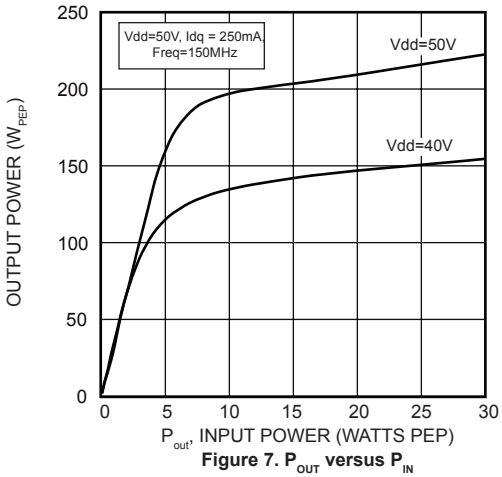

Figure 7. P_{OUT} versus P_{IN}

30 MHz test Circuit

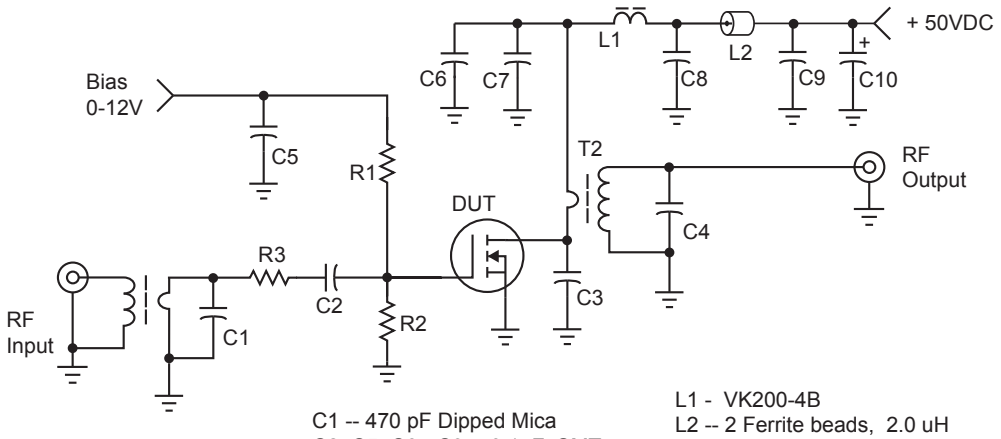

C1 -- 470 pF Dipped Mica
C2, C5, C6 - C9 -- 0.1uF SMT
C3 -- 200pF ATC 700C
C4 -- 15pF, ATC 700C
C10 -- 10uF, 100V Electrolytic

L1 - VK200-4B
L2 -- 2 Ferrite beads, 2.0 uH
R1, R2 -- 51 Ω, 1 W Carbon
R3 -- 3.3 Ω, 1 W Carbon
T1 -- 9:1 Transformer
T2 -- 1:9 Transformer

175 MHz test Circuit

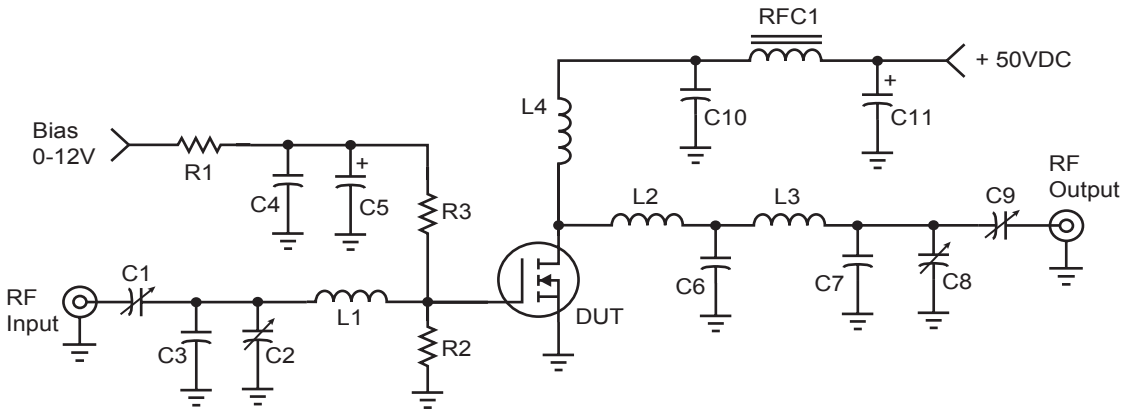

C1, C2, C8 -- Arco 463 or equivalent
C3 -- 25pF, Unelco
C4 -- 0.1uF, Ceramic
C5 -- 1.0 uF, 15 WV Tantalum
C6 -- 250pF, Unelco J101
C7-- 25pF, Unelco J101
C9 -- Arco 262 or equivalent
C10 -- 0.05uF, Ceramic
C11 -- 15uF, 60WV Electrolytic

L1 -- 3/4", #18 into Hairpin
L2 -- Printed Line, 0.200" W x 0.500" L
L3 -- 1", #16 into Hairpin approx 16nH
L4 -- 2 turns #16, 5/16" ID
RFC1 - VK200-4B
R1 – 150 Ω, 1/2W Carbon
R2 – 10k Ω, 1/2W Carbon
R3 – 120 Ω, 1/2W Carbon

Adding MP at the end of P/N specifies a matched pair where $V_{GS(TH)}$ is matched between the two parts. V_{TH} values are marked on the devices per the following table.

Code	Vth Range	Code 2	Vth Range
A	2.900 - 2.975	M	3.650 - 3.725
B	2.975 - 3.050	N	3.725 - 3.800
C	3.050 - 3.125	P	3.800 - 3.875
D	3.125 - 3.200	R	3.875 - 3.950
E	3.200 - 3.275	S	3.950 - 4.025
F	3.275 - 3.350	T	4.025 - 4.100
G	3.350 - 3.425	W	4.100 - 4.175
H	3.425 - 3.500	X	4.175 - 4.250
J	3.500 - 3.575	Y	4.250 - 4.325
K	3.575 - 3.650	Z	4.325 - 4.400

V_{TH} values are based on Microsemi measurements at datasheet conditions with an accuracy of 1.0%.

.5” SOE Package Outline
All Dimensions are ± .005

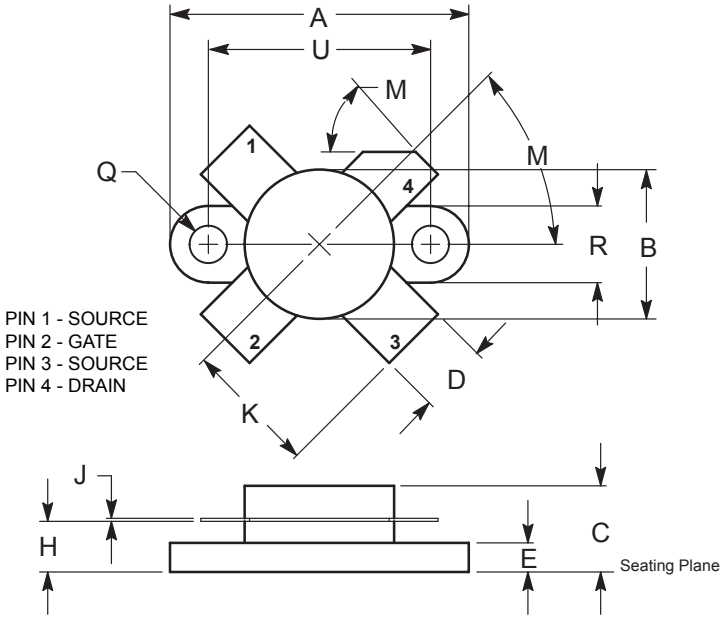

DIM	INCHES		MILLIMETERS	
	MIN	MAX	MIN	MAX
A	0.096	0.990	24.39	25.14
B	0.465	0.510	11.82	12.95
C	0.229	0.275	5.82	6.98
D	0.216	0.235	5.49	5.96
E	0.084	0.110	2.14	2.79
H	0.144	0.178	3.66	4.52
J	0.003	0.007	0.08	0.17
K	0.435		11.0	
M	45° NOM		45° NOM	
Q	0.115	0.130	2.93	3.30
R	0.246	0.255	6.25	6.47
U	0.720	0.730	18.29	18.54

The information contained in the document (unless it is publicly available on the Web without access restrictions) is PROPRIETARY AND CONFIDENTIAL information of Microsemi and cannot be copied, published, uploaded, posted, transmitted, distributed or disclosed or used without the express duly signed written consent of Microsemi. If the recipient of this document has entered into a disclosure agreement with Microsemi, then the terms of such Agreement will also apply . This document and the information contained herein may not be modified, by any person other than authorized personnel of Microsemi. No license under any patent, copyright, trade secret or other intellectual property right is granted to or conferred upon you by disclosure or delivery of the information, either expressly, by implication, inducement, estoppels or otherwise. Any license under such intellectual property rights must be approved by Microsemi in writing signed by an officer of Microsemi.

Microsemi reserves the right to change the configuration, functionality and performance of its products at anytime without any notice. This product has been subject to limited testing and should not be used in conjunction with life-support or other mission-critical equipment or applications. Microsemi assumes no liability whatsoever, and Microsemi disclaims any express or implied warranty, relating to sale and/or use of Microsemi products including liability or warranties relating to fitness for a particular purpose, merchantability, or infringement of any patent, copyright or other intellectual property right. Any performance specifications believed to be reliable but are not verified and customer or user must conduct and complete all performance and other testing of this product as well as any user or customers final application. User or customer shall not rely on any data and performance specifications or parameters provided by Microsemi. It is the customer's and user's responsibility to independently determine suitability of any Microsemi product and to test and verify the same. The information contained herein is provided "AS IS, WHERE IS" and with all faults, and the entire risk associated with such information is entirely with the User. Microsemi specifically disclaims any liability of any kind including for consequential, incidental and punitive damages as well as lost profit. The product is subject to other terms and conditions which can be located on the web at http://www.microsemi.com/legal/tnc.asp

050-4937 Rev G 12-2013