DLP2010NIR (.2 WVGA Near-Infrared DMD)

1 Features

- 0.2-inch (5.29-mm) Diagonal Micromirror Array
  - 854 × 480 Array of Aluminum Micrometer-Sized Mirrors, in an Orthogonal Layout
  - 5.4-µm Micromirror Pitch
  - ±17° Micromirror Tilt (Relative to Flat Surface)
  - Side Illumination for Optimal Efficiency and Optical Engine Size
- Highly Efficient Steering of NIR light
  - Window Transmission Efficiency 96% Nominal (700 to 2000 nm, Single Pass Through Two Window Surfaces)
  - Window Transmission Efficiency 90% Nominal (2000 to 2500 nm, Single Pass Through Two Window Surfaces)
  - Polarization Independent Aluminum Micromirrors
- Dedicated DLPC150/DLPC3470 Controllers for Reliable Operation
  - Binary Pattern Rates up to 2880 Hz
  - Pattern Sequence Mode for Control over Each Micromirror in Array
- Dedicated Power Management Integrated Circuit (PMIC) DLPA2000 or DLPA2005 for Reliable Operation
- 15.9-mm × 5.3-mm × 4-mm Body Size for Portable Instruments

2 Applications

- Spectrometers (Chemical Analysis):
  - Portable Process Analyzers
  - Portable Equipment
- Compressive Sensing (Single Pixel NIR Cameras)
- 3D Biometrics
- Machine Vision
- Infrared Scene Projection
- Microscopes
- Laser Marking
- Optical Choppers
- Optical Networking

3 Description

The DLP2010NIR digital micromirror device (DMD) acts as a spatial light modulator (SLM) to steer near-infrared (NIR) light and create patterns with speed, precision, and efficiency. Featuring high resolution in a compact form factor, the DLP2010NIR DMD is often combined with a grating single element detector to replace expensive InGaAs linear array-based detector designs, leading to high performance, cost-effective portable NIR Spectroscopy solutions. The DLP2010NIR DMD enables wavelength control and programmable spectrum and is well suited for low power mobile applications such as 3D biometrics, facial recognition, skin analysis, material identification and chemical sensing. ™

PART NUMBER(1)	PACKAGE	BODY SIZE (NOM)
DLP2010NIR	FQJ (40)	15.9-mm × 5.3- mm

(1) For all available packages, see the orderable addendum at the end of the data sheet.

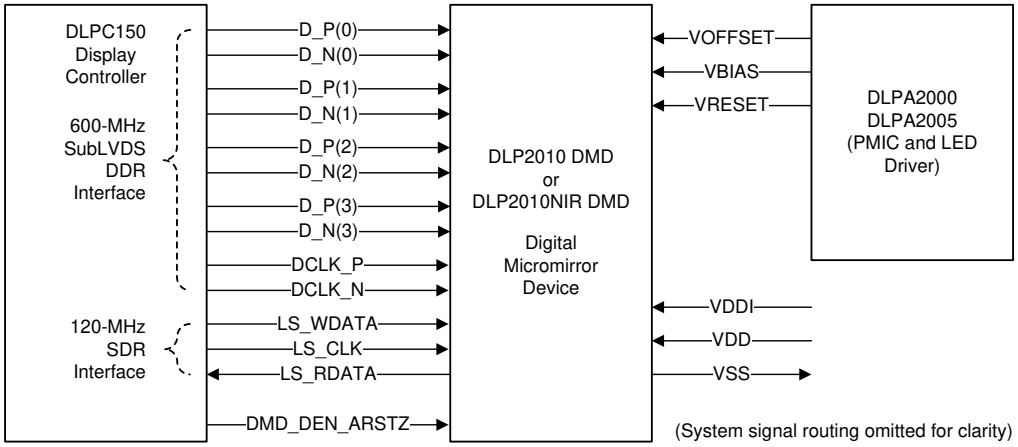

Figure 3-1. Simplified Application

An IMPORTANT NOTICE at the end of this data sheet addresses availability, warranty, changes, use in safety-critical applications, intellectual property matters and other important disclaimers. PRODUCTION DATA.

Table of Contents

1 Features....1
2 Applications....1
3 Description....1
4 Revision History....2
5 Pin Configuration and Functions....3
6 Specifications....6
6.1 Absolute Maximum Ratings....6
6.2 Storage Conditions....6
6.3 ESD Ratings....7
6.4 Recommended Operating Conditions....7
6.5 Thermal Information....9
6.6 Electrical Characteristics....9
6.7 Timing Requirements....10
6.8 Switching Characteristics....15
6.9 System Mounting Interface Loads....15
6.10 Physical Characteristics of the Micromirror Array....17
6.11 Micromirror Array Optical Characteristics....18
6.12 Window Characteristics....19
6.13 Chipset Component Usage Specification....19
6.14 Typical Characteristics....20
7 Detailed Description....21
7.1 Overview....21
7.2 Functional Block Diagram....21
7.3 Feature Description....22
7.4 Device Functional Modes....22
7.5 Optical Interface and System Image Quality Considerations....22
7.6 Micromirror Array Temperature Calculation....23
7.7 Micromirror Landed-On/Landed-Off Duty Cycle....24
8 Application and Implementation....26
8.1 Application Information....26
8.2 Typical Application....26
9 Power Supply Recommendations....29
9.1 Power Supply Power-Up Procedure....29
9.2 Power Supply Power-Down Procedure....29
9.3 Power Supply Sequencing Requirements....30
10 Layout....32
10.1 Layout Guidelines....32
10.2 Layout Example....32
11 Device and Documentation Support....34
11.1 Device Support....34
11.2 Related Links....34
11.3 Receiving Notification of Documentation Updates....34
11.4 Support Resources....35
11.5 Trademarks....35
11.6 Electrostatic Discharge Caution....35
11.7 Glossary....35
12 Mechanical, Packaging, and Orderable Information....35

4 Revision History

NOTE: Page numbers for previous revisions may differ from page numbers in the current version.

Changes from Revision A (November 2021) to Revision B (May 2022)	Page
• Updated Absolute Maximum Ratings disclosure to the latest TI standard	6
• Updated *Micromirror Array Optical Characteristics*	18
• Added *Third-Party Products Disclaimer*	34

Changes from Revision * (December 2018) to Revision A (November 2021)	Page
• Updated the numbering format for tables, figures, and cross-references throughout the document	1
• Updated $\lvert T_{DELTA} \rvert$ MAX from 30°C to 15°C	7

Copyright © 2022 Texas Instruments Incorporated

5 Pin Configuration and Functions

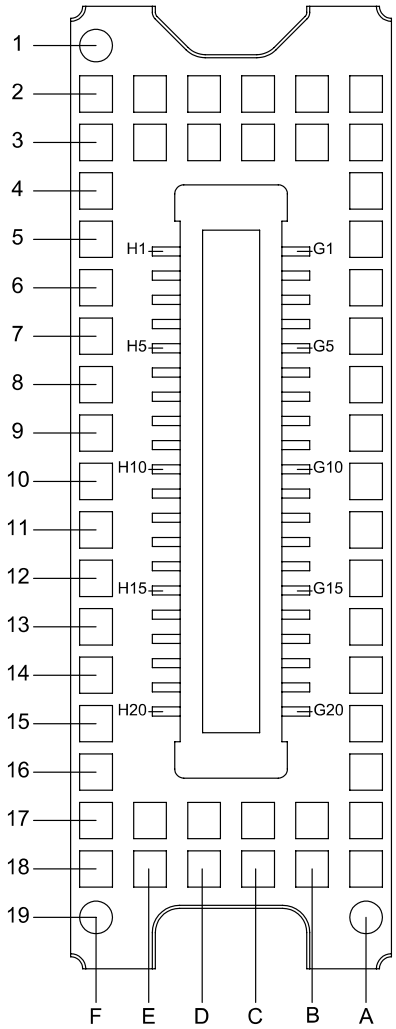

Figure 5-1. FQJ Package. 40-Pin CLGA. Bottom View.

PIN		TYPE	SIGNAL	DATA RATE	DESCRIPTION	PACKAGE NET TRACE LENGTH[2] (mm)
NAME	NO.					
DATA INPUTS, SUBLVDS INTERFACE						
D_N(0)	G4	I	SubLVDS	Double	Input data pair 0, negative	7.03
D_P(0)	G3	I	SubLVDS	Double	Input data pair 0, positive	7.03
D_N(1)	G8	I	SubLVDS	Double	Input data pair 1, negative	7.03
D_P(1)	G7	I	SubLVDS	Double	Input data pair 1, positive	7.03
D_N(2)	H5	I	SubLVDS	Double	Input data pair 2, negative	7.02
D_P(2)	H6	I	SubLVDS	Double	Input data pair 2, positive	7.02
D_N(3)	H1	I	SubLVDS	Double	Input data pair 3, negative	7.00
D_P(3)	H2	I	SubLVDS	Double	Input data pair 3, positive	7.00
DCLK_N	H9	I	SubLVDS	Double	Clock, negative	7.03
DCLK_P	H10	I	SubLVDS	Double	Clock, positive	7.03
CONTROL INPUTS, LPSDR INTERFACE						

PIN		TYPE	SIGNAL	DATA RATE	DESCRIPTION	PACKAGE NET TRACE LENGTH[2] (mm)
NAME	NO.					
DMD_DEN_ARSTZ	G12	I	LPSDR [1]		Active low asynchronous DMD reset signal. A low signal places the DMD in reset. A high signal releases the DMD from reset and places it in active mode.	5.72
LS_CLK	G19	I	LPSDR	Single	Clock for low-speed interface	3.54
LS_WDATA	G18	I	LPSDR	Single	Write data for low-speed interface	3.54
LS_RDATA	G11	O	LPSDR	Single	Read data for low-speed interface	8.11
POWER						
V_{BIAS} [3]	H17	Power			Supply voltage for micromirror positive bias level	
V_{OFFSET} [3]	H13	Power			Supply voltage for high voltage CMOS (HVCMOS) core logic. Includes: Supply voltage for stepped high level at micromirror address electrodes and supply voltage for offset level at micromirrors.	
V_{RESET} [3]	H18	Power			Supply voltage for micromirror negative reset level	
V_{DD} [3]	G20	Power			Supply voltage for low voltage CMOS (LVCMOS) core logic. Includes supply voltage for LPSDR inputs and supply voltage for normal high level at micromirror address electrodes.	
V_{DD}	H14	Power				
V_{DD}	H15	Power				
V_{DD}	H16	Power				
V_{DD}	H19	Power				
V_{DD}	H20	Power				
V_{DDI} [3]	G1	Power			Supply voltage for SubLVDS receivers	
V_{DDI}	G2	Power				
V_{DDI}	G5	Power				
V_{DDI}	G6	Power				
V_{SS} [3]	G9	Power			Ground. Common return for all power.	
V_{SS}	G10	Power				
V_{SS}	G13	Power				
V_{SS}	G14	Power				
V_{SS}	G15	Power				
V_{SS}	G16	Power				
V_{SS}	G17	Power				
V_{SS}	H3	Power				
V_{SS}	H4	Power				
V_{SS}	H7	Power				
V_{SS}	H8	Power				
V_{SS}	H11	Power				
V_{SS}	H12	Power				
RESERVED						

Copyright © 2022 Texas Instruments Incorporated

PIN		TYPE	SIGNAL	DATA RATE	DESCRIPTION	PACKAGE NET TRACE LENGTH(2) (mm)
NAME	NO.					
No connect	A2, A3, A4, A5, A6 A7, A8, A9, A10, A11, A12, A13, A14, A15, A16, A17, A18, A19				Reserved pins. For proper device operation, leave these pins unconnected.	
No connect	B2, B3, B17, B18				Reserved pins. For proper device operation, leave these pins unconnected.	
No connect	C2, C3, C17, C18				Reserved pins. For proper device operation, leave these pins unconnected.	
No connect	D2, D3, D17, D18				Reserved pins. For proper device operation, leave these pins unconnected.	
No connect	E2, E3, E17, E18				Reserved pins. For proper device operation, leave these pins unconnected.	
No connect	F1, F2, F3, F4, F5, F6, F7, F8, F9, F10, F11, F12, F13, F14, F15, F16, F17, F18, F19				Reserved pins. For proper device operation, leave these pins unconnected.	

(1) Low speed interface is LPSDR and adheres to the electrical characteristics and AC/DC operating conditions table in JEDEC Standard No. 209B, *Low Power Double Data Rate (LPDDR)* JESD209B.
(2) Net trace lengths inside the package:
Relative dielectric constant for the FQJ ceramic package is 9.8.
Propagation speed = 11.8 / sqrt(9.8) = 3.769 inches/ns.
Propagation delay = 0.265 ns/inch = 265 ps/inch = 10.43 ps/mm.
(3) The following power supplies are all required to operate the DMD: V_{SS}, V_{DD}, V_{DDI}, V_{OFFSET}, V_{BIAS}, V_{RESET}.

6 Specifications

6.1 Absolute Maximum Ratings

(see [1])

			MIN	MAX	UNIT
Supply voltage	V_{DD}	Supply voltage for LVCMOS core logic and LPSDR low speed interface[2]	–0.5	2.3	V
	V_{DDI}	Supply voltage for SubLVDS receivers[2]	–0.5	2.3	V
	V_{OFFSET}	Supply voltage for HVCMOS and micromirror electrode[2] [3]	–0.5	10.6	V
	V_{BIAS}	Supply voltage for micromirror electrode bias circuits [2]	–0.5	19	V
	V_{RESET}	Supply voltage for micromirror electrode reset circuit [2]	–15	0.3	V
	$\|V_{DDI}–V_{DD}\|$	Supply voltage delta (absolute value)[4]		0.3	V
	$\|V_{BIAS}–V_{OFFSET}\|$	Supply voltage delta (absolute value)[5]		11	V
	$\|V_{BIAS}–V_{RESET}\|$	Supply voltage delta (absolute value)[6]		34	V
Input voltage	Input voltage for other inputs LPSDR[2]		–0.5	V_{DD} + 0.5	V
	Input voltage for other inputs SubLVDS[2] [7]		–0.5	V_{DDI} + 0.5	V
Input pins	$\|V_{ID}\|$	SubLVDS input differential voltage (absolute value)[7]		810	mV
	I_{ID}	SubLVDS input differential current		8.1	mA
Clock frequency	f_{clock}	Clock frequency for low speed interface LS_CLK		130	MHz
	f_{clock}	Clock frequency for high speed interface DCLK		620	MHz
Environmental	T_{ARRAY} and T_{WINDOW}	Temperature – operational [8]	–20	90	°C
		Temperature – non-operational [8]	–40	90	°C
	T_{DP}	Dew point (operating and non-operating)		81	°C
	$\|T_{DELTA}\|$	Absolute Temperature delta between any point on the window edge and the ceramic test point TP1 [9]		30	°C

(1) Operation outside the Absolute Maximum Ratings may cause permanent device damage. Absolute Maximum Ratings do not imply functional operation of the device at these or any other conditions beyond those listed under Recommended Operating Conditions. If outside the Recommended Operating Conditions but within the Absolute Maximum Ratings, the device may not be fully functional, and this may affect device reliability, functionality, performance, and shorten the device lifetime.
(2) All voltage values are with respect to the ground terminals (V_{SS}). The following power supplies are all required to operate the DMD: V_{SS}, V_{DD}, V_{DDI}, V_{OFFSET}, V_{BIAS}, and V_{RESET}.
(3) V_{OFFSET} supply transients must fall within specified voltages.
(4) Exceeding the recommended allowable absolute voltage difference between V_{DDI} and V_{DD} may result in excessive current draw.
(5) Exceeding the recommended allowable absolute voltage difference between V_{BIAS} and V_{OFFSET} may result in excessive current draw.
(6) Exceeding the recommended allowable absolute voltage difference between V_{BIAS} and V_{RESET} may result in excessive current draw.
(7) This maximum input voltage rating applies when each input of a differential pair is at the same voltage potential. Sub-LVDS differential inputs must not exceed the specified limit or damage may result to the internal termination resistors.
(8) The highest temperature of the active array (as calculated by the *Section 7.6*), or of any point along the Window Edge as defined in href="Micromirror-Array-Temperature-Calculation-DLPS0008740.dita#DLPS0008740/DLPS0001803"/>. The locations of thermal test points TP2 and TP3 in href="Micromirror-Array-Temperature-Calculation-DLPS0008740.dita#DLPS0008740/DLPS0001803"/> are intended to measure the highest window edge temperature. If a particular application causes another point on the window edge to be at a higher temperature, that test point should be used.
(9) Temperature delta is the highest difference from the ceramic test point 1 (TP1) and anywhere on the window edge shown in Figure 19. The window test points TP2 and TP3 shown in Figure 19 are intended to result in the worst case delta temperature. If a particular application causes another point on the window edge to result in a larger delta temperature, that point should be used.

6.2 Storage Conditions

Applicable for the DMD as a component or non-operating in a system.

		MIN	MAX	UNIT
T_{DMD}	DMD storage temperature	–40	85	°C

Copyright © 2022 Texas Instruments Incorporated

		MIN	MAX	UNIT
$T_{DP\text{-}AVG}$	Average dew point temperature, (non-condensing)(1)		24	°C
$T_{DP\text{-}ELR}$	Elevated dew point temperature range, (non-condensing)(2)	28	36	°C
CT_{ELR}	Cumulative time in elevated dew point temperature range		6	Months

(1) The average over time (including storage and operating) that the device is not in the elevated dew point temperature range.
(2) Exposure to dew point temperatures in the elevated range during storage and operation should be limited to less than a total cumulative time of CT_{ELR}.

6.3 ESD Ratings

			VALUE	UNIT
$V_{(ESD)}$	Electrostatic discharge	Human body model (HBM), per ANSI/ESDA/JEDEC JS-001(1)	±1000	V

(1) JEDEC document JEP155 states that 500-V HBM allows safe manufacturing with a standard ESD control process.

6.4 Recommended Operating Conditions

Over operating free-air temperature range (unless otherwise noted)(1) (2)

		MIN	NOM	MAX	UNIT
SUPPLY VOLTAGE RANGE(3)					
V_{DD}	Supply voltage for LVCMOS core logic Supply voltage for LPSDR low-speed interface	1.65	1.8	1.95	V
V_{DDI}	Supply voltage for SubLVDS receivers	1.65	1.8	1.95	V
V_{OFFSET}	Supply voltage for HVCMOS and micromirror electrode(4)	9.5	10	10.5	V
V_{BIAS}	Supply voltage for mirror electrode	17.5	18	18.5	V
V_{RESET}	Supply voltage for micromirror electrode	–14.5	–14	–13.5	V
$\lvert V_{DDI}–V_{DD}\rvert$	Supply voltage delta (absolute value)(5)			0.3	V
$\lvert V_{BIAS}–V_{OFFSET}\rvert$	Supply voltage delta (absolute value)(6)			10.5	V
$\lvert V_{BIAS}–V_{RESET}\rvert$	Supply voltage delta (absolute value)(7)			33	V
OUTPUT TERMINALS					
I_{OH}	High-level output current at $V_{oh} = 0.8 \times V_{DD}$			–30	mA
I_{OL}	Low-level output current at $V_{ol} = 0.2 \times V_{DD}$			30	mA
CLOCK FREQUENCY					
f_{clock}	Clock frequency for low speed interface LS_CLK(8)	108		120	MHz
f_{clock}	Clock frequency for high speed interface DCLK(9)	300		600	MHz
	Duty cycle distortion DCLK	44%		56%	
SUBLVDS INTERFACE(9)					
$\lvert V_{ID}\rvert$	SubLVDS input differential voltage (absolute value) Figure 6-8, Figure 6-9	150	250	350	mV
V_{CM}	Common mode voltage Figure 6-8, Figure 6-9	700	900	1100	mV
$V_{SUBLVDS}$	SubLVDS voltage Figure 6-8, Figure 6-9	575		1225	mV
Z_{LINE}	Line differential impedance (PWB/trace)	90	100	110	Ω
Z_{IN}	Internal differential termination resistance Figure 6-10	80	100	120	Ω
	100-Ω differential PCB trace	6.35		152.4	mm
LPSDR INTERFACE(10)					
Z_{LINE}	Line differential impedance (PWB/trace)	61.2	68	74.8	Ω
ENVIRONMENTAL					

		MIN	NOM	MAX	UNIT
T_{ARRAY}	Array temperature – long-term operational(11) (12) (13)	0		40 to 70(11)	°C
	Array temperature – short-term operational, 25 hr max(13) (14)	–20		-10	
	Array temperature – short-term operational, 500hr max (13) (14)	-10		0	
	Array temperature – short-term operational, 500hr max (13) (14)	70		75	
T_{WINDOW}	Window temperature – operational(15) (17)			90	°C
$\|T_{DELTA}\|$	Absolute temperature difference between any point on the window edge and the ceramic test point TP1(16)			15	°C
CT_{ELR}	Cumulative time in elevated dew point temperature range			6	Months
ILL_{UV}	Illumination, wavelength < 420 nm			0.68	mW/cm^2
ILL_{VIS}	Illumination wavelengths between 420 nm and 700 nm	Thermally limited			
ILL_{NIR}	Illumination, wavelength 700 - 2500 nm			2000	mW/cm^2
ILL_{IR}	Illumination, wavelength > 2500 nm			10	mW/cm^2
ILL_{θ}	Illumination marginal ray angle(17)			55	deg

(1) *Recommended Operating Conditions* are applicable after the DMD is installed in the final product.
(2) The functional performance of the device specified in this datasheet is achieved when operating the device within the limits defined by the *Recommended Operating Conditions*. No level of performance is implied when operating the device above or below the Recommended Operating Conditions limits.
(3) All voltage values are with respect to the ground pins (V_{SS}).
(4) V_{OFFSET} supply transients must fall within specified max voltages.
(5) To prevent excess current, the supply voltage delta $|V_{DDI} – V_{DD}|$ must be less than specified limit.
(6) To prevent excess current, the supply voltage delta $|V_{BIAS} – V_{OFFSET}|$ must be less than the specified limit.
(7) To prevent excess current, the supply voltage delta $|V_{BIAS} – V_{RESET}|$ must be less than the specified limit.
(8) LS_CLK must run as specified to ensure internal DMD timing for reset waveform commands.
(9) Refer to the SubLVDS timing requirements in *Section 6.7*.
(10) Refer to the LPSDR timing requirements in *Section 6.7*.
(11) Per Figure 6-1, the maximum operational array temperature should be derated based on the micromirror landed duty cycle that the DMD experiences in the end application. Refer to *Section 7.7* for a definition of micromirror landed duty cycle.
(12) Long-term is defined as the usable life of the device.
(13) The array temperature cannot be measured directly and must be computed analytically from the temperature measured at test point 1 (TP1) shown in Figure 7-1 and the package thermal resistance using *Section 7.6*.
(14) Short-term is the total cumulative time over the useful life of the device.
(15) Window temperature is the highest temperature on the window edge shown in Figure 7-1. The locations of thermal test points TP2 and TP3 in Figure 7-1 are intended to measure the highest window edge temperature. If a particular application causes another point on the window edge to be at a higher temperature, a test point should be added to that location.
(16) Temperature delta is the highest difference from the ceramic test point 1 (TP1) and anywhere on the window edge shown in Figure 7-1. The window test points TP2 and TP3 shown in Figure 7-1 are intended to result in the worst case delta temperature. If a particular application causes another point on the window edge to result in a larger delta temperature, that point should be used.
(17) The maximum marginal ray angle of the incoming illumination light at any point in the micromirror array, including Pond of Micromirrors (POM), should not exceed 55 degrees from the normal to the device array plane. The device window aperture has not necessarily been designed to allow incoming light at higher maximum angles to pass to the micromirrors, and the device performance has not been tested nor qualified at angles exceeding this. Illumination light exceeding this angle outside the micromirror array (including POM) will contribute to thermal limitations described in this document, and may negatively affect lifetime.

Copyright © 2022 Texas Instruments Incorporated

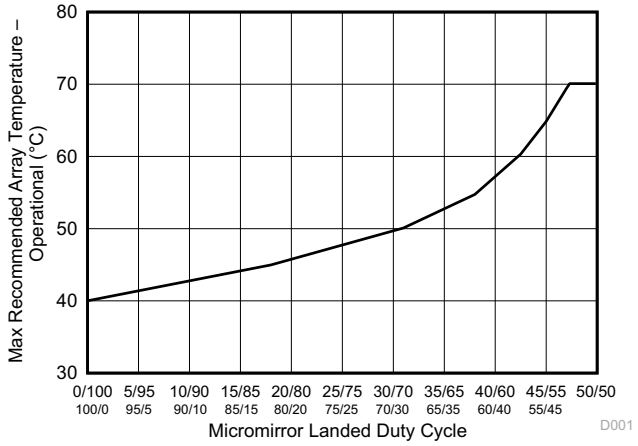

Figure 6-1. Maximum Recommended Array Temperature – Derating Curve

6.5 Thermal Information

THERMAL METRIC [1]	DLP2010NIR FQJ (CLGA) 40 PINS			UNIT
	MIN	TYP	MAX	
Thermal resistance Active area to test point TP1[1]			7.9	°C/W

(1) The DMD is designed to conduct absorbed and dissipated heat to the back of the package. The cooling system must be capable of maintaining the package within the temperature range specified in the *Recommended Operating Conditions*. The total heat load on the DMD is largely driven by the incident light absorbed by the active area; although other contributions include light energy absorbed by the window aperture and electrical power dissipation of the array. Optical systems should be designed to minimize the light energy falling outside the window clear aperture since any additional thermal load in this area can significantly degrade the reliability of the device.

Over operating free-air temperature range (unless otherwise noted)[10]

6.6 Electrical Characteristics

PARAMETER		TEST CONDITIONS[2]	MIN	TYP	MAX	UNIT
CURRENT						
I_{DD}	Supply current: VDD[3] [5]	VDD = 1.95 V			34.7	mA
		VDD = 1.8 V		27.5		
I_{DDI}	Supply current: VDDI[3] [5]	VDDI = 1.95 V			9.4	mA
		VDD = 1.8 V		6.6		
I_{OFFSET}	Supply current: VOFFSET[4] [6]	VOFFSET = 10.5 V			1.7	mA
		VOFFSET = 10 V		0.9		
I_{BIAS}	Supply current: VBIAS[4] [6]	VBIAS = 18.5 V			0.4	mA
		VBIAS = 18 V		0.2		
I_{RESET}	Supply current: VRESET[6]	VRESET = –14.5 V			2	mA
		VRESET = –14 V		1.2		
POWER[1]						
P_{DD}	Supply power dissipation: VDD[3] [5]	VDD = 1.95 V			67.7	mW
		VDD = 1.8 V		49.5		
P_{DDI}	Supply power dissipation: VDDI[3] [5]	VDDI = 1.95 V			18.3	mW
		VDD = 1.8 V		11.9		
P_{OFFSET}	Supply power dissipation: VOFFSET[4] [6]	VOFFSET = 10.5 V			17.9	mW
		VOFFSET = 10 V		9		

6.6 Electrical Characteristics (continued)

PARAMETER		TEST CONDITIONS[2]	MIN	TYP	MAX	UNIT
P_{BIAS}	Supply power dissipation: VBIAS[4] [6]	VBIAS = 18.5 V			7.4	mW
		VBIAS = 18 V		3.6		
P_{RESET}	Supply power dissipation: VRESET[6]	VRESET = –14.5 V			29	mW
		VRESET = –14 V		16.8		
P_{TOTAL}	Supply power dissipation: Total			90.8	140.3	mW
LPSDR INPUT[7]						
$V_{IH(DC)}$	DC input high voltage[9]		0.7 × VDD		VDD + 0.3	V
$V_{IL(DC)}$	DC input low voltage[9]		–0.3		0.3 × VDD	V
$V_{IH(AC)}$	AC input high voltage[9]		0.8 × VDD		VDD + 0.3	V
$V_{IL(AC)}$	AC input low voltage[9]		–0.3		0.2 × VDD	V
ΔV_T	Hysteresis ($V_{T+} – V_{T–}$)	Figure 6-10	0.1 × VDD		0.4 × VDD	V
I_{IL}	Low–level input current	VDD = 1.95 V; V_I = 0 V	–100			nA
I_{IH}	High–level input current	VDD = 1.95 V; V_I = 1.95 V			100	nA
LPSDR OUTPUT[8]						
V_{OH}	DC output high voltage	I_{OH} = –2 mA	0.8 × VDD			V
V_{OL}	DC output low voltage	I_{OL} = 2 mA			0.2 × VDD	V
CAPACITANCE						
C_{IN}	Input capacitance LPSDR	f = 1 MHz			10	pF
	Input capacitance SubLVDS	f = 1 MHz			20	pF
C_{OUT}	Output capacitance	f = 1 MHz			10	pF
C_{RESET}	Reset group capacitance	f = 1 MHz; (480 × 108) micromirrors	95		113	pF

(1) The following power supplies are all required to operate the DMD: VSS, VDD, VDDI, VOFFSET, VBIAS, VRESET.
(2) All voltage values are with respect to the ground pins (VSS).
(3) To prevent excess current, the supply voltage delta |VDDI – VDD| must be less than specified limit.
(4) To prevent excess current, the supply voltage delta |VBIAS – VOFFSET| must be less than specified limit.
(5) Supply power dissipation based on non–compressed commands and data.
(6) Supply power dissipation based on 3 global resets in 200 µs.
(7) LPSDR specifications are for pins LS_CLK and LS_WDATA.
(8) LPSDR specification is for pin LS_RDATA.
(9) Low-speed interface is LPSDR and adheres to the Electrical Characteristics and AC/DC Operating Conditions table in JEDEC Standard No. 209B, *Low-Power Double Data Rate (LPDDR)* JESD209B.
(10) Device electrical characteristics are over *Section 6.4* unless otherwise noted.

Device electrical characteristics are over *Recommended Operating Conditions* unless otherwise noted.

6.7 Timing Requirements

			MIN	NOM	MAX	UNIT
LPSDR						
t_R	Rise slew rate[1]	(30% to 80%) × VDD, Figure 6-3	1		3	V/ns
t_V	Fall slew rate[1]	(70% to 20%) × VDD, Figure 6-3	1		3	V/ns
t_R	Rise slew rate[2]	(20% to 80%) × VDD, Figure 6-3	0.25			V/ns
t_F	Fall slew rate[2]	(80% to 20%) × VDD, Figure 6-3	0.25			V/ns
t_C	Cycle time LS_CLK,	Figure 6-2	7.7	8.3		ns
$t_{W(H)}$	Pulse duration LS_CLK high	50% to 50% reference points,Figure 6-2	3.1			ns
$t_{W(L)}$	Pulse duration LS_CLK low	50% to 50% reference points, Figure 6-2	3.1			ns
t_{SU}	Setup time	LS_WDATA valid before LS_CLK ↑, Figure 6-2	1.5			ns
t_H	Hold time	LS_WDATA valid after LS_CLK ↑, Figure 6-2	1.5			ns
t_{WINDOW}	Window time[1] [4]	Setup time + Hold time, Figure 6-2	3			ns

Copyright © 2022 Texas Instruments Incorporated

6.7 Timing Requirements (continued)

			MIN	NOM	MAX	UNIT
$t_{DERATING}$	Window time derating(1) (4)	For each 0.25 V/ns reduction in slew rate below 1 V/ns, Figure 6-5		0.35		ns
SubLVDS						
t_R	Rise slew rate	20% to 80% reference points, Figure 6-4	0.7	1		V/ns
t_F	Fall slew rate	80% to 20% reference points, Figure 6-4	0.7	1		V/ns
t_C	Cycle time LS_CLK,	Figure 6-6	1.61	1.67		ns
$t_{W(H)}$	Pulse duration DCLK high	50% to 50% reference points, Figure 6-6	0.71			ns
$t_{W(L)}$	Pulse duration DCLK low	50% to 50% reference points, Figure 6-6	0.71			ns
t_{SU}	Setup time	D(0:3) valid before DCLK ↑ or DCLK ↓, Figure 6-6				
t_H	Hold time	D(0:3) valid after DCLK ↑ or DCLK ↓, Figure 6-6				
t_{WINDOW}	Window time	Setup time + Hold time, Figure 6-6,Figure 6-7			3	ns
$t_{LVDS-ENABLE+REFGEN}$	Power-up receiver(3)				2000	ns

(1) Specification is for LS_CLK and LS_WDATA pins. Refer to LPSDR input rise slew rate and fall slew rate in Figure 6-3.
(2) Specification is for DMD_DEN_ARSTZ pin. Refer to LPSDR input rise and fall slew rate in Figure 6-3.
(3) Specification is for SubLVDS receiver time only and does not take into account commanding and latency after commanding.
(4) Window time derating example: 0.5-V/ns slew rate increases the window time by 0.7 ns, from 3 to 3.7 ns.

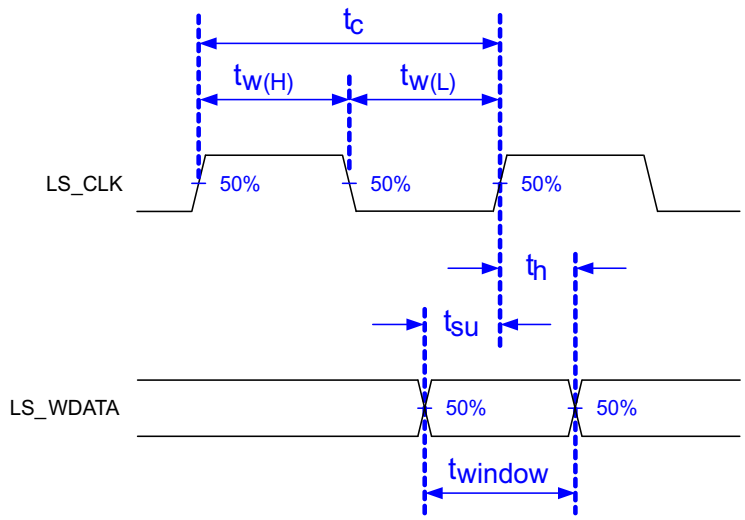

Low-speed interface is LPSDR and adheres to the *Electrical Characteristics* and AC/DC Operating Conditions table in JEDEC Standard No. 209B, *Low Power Double Data Rate (LPDDR)* JESD209B.

Figure 6-2. LPSDR Switching Parameters

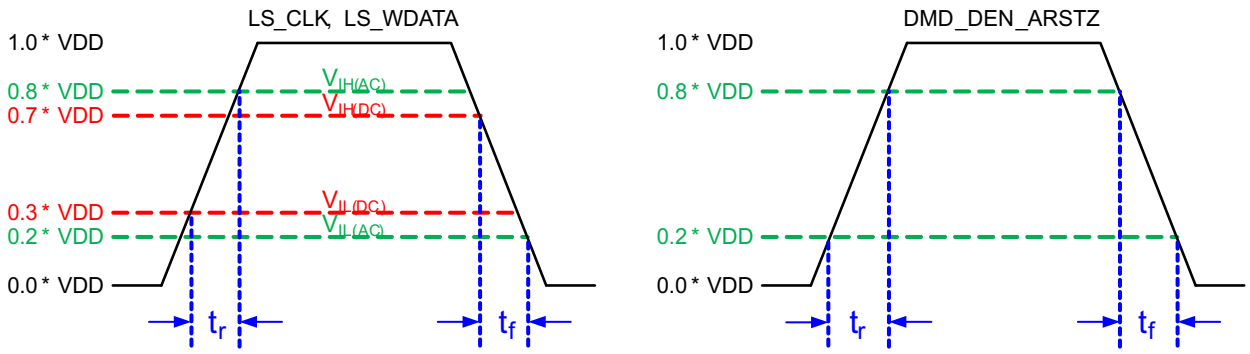

Figure 6-3. LPSDR Input Rise and Fall Slew Rate

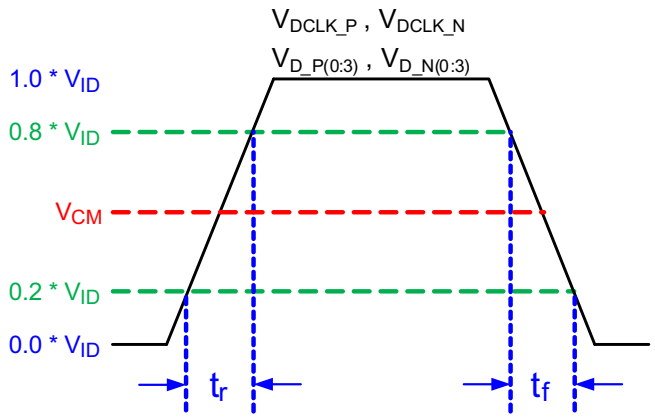

Figure 6-4. SubLVDS Input Rise and Fall Slew Rate

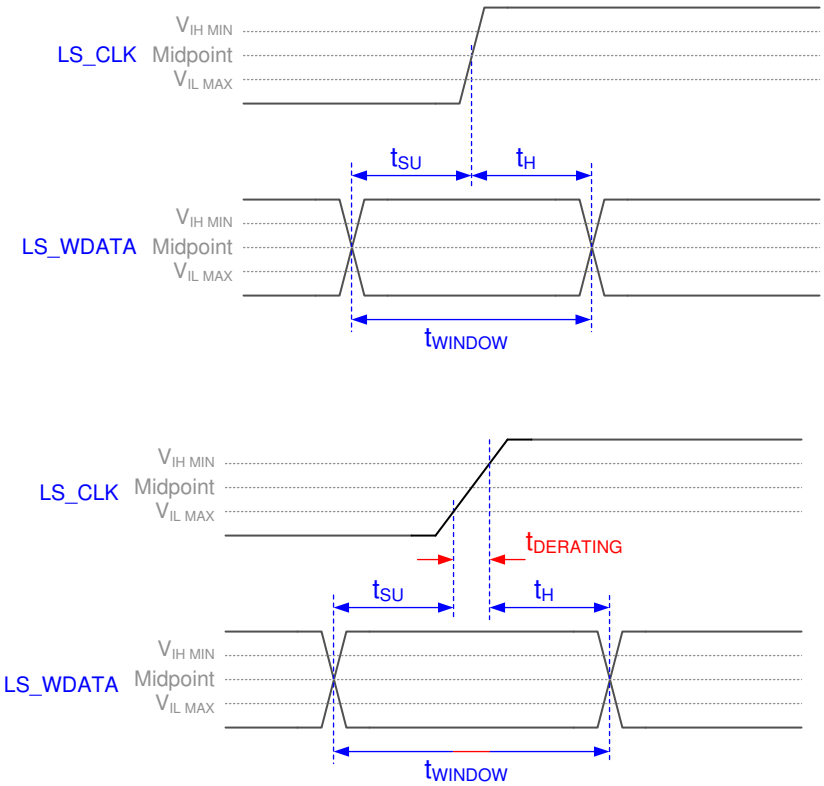

Figure 6-5. Window Time Derating Concept

Copyright © 2022 Texas Instruments Incorporated

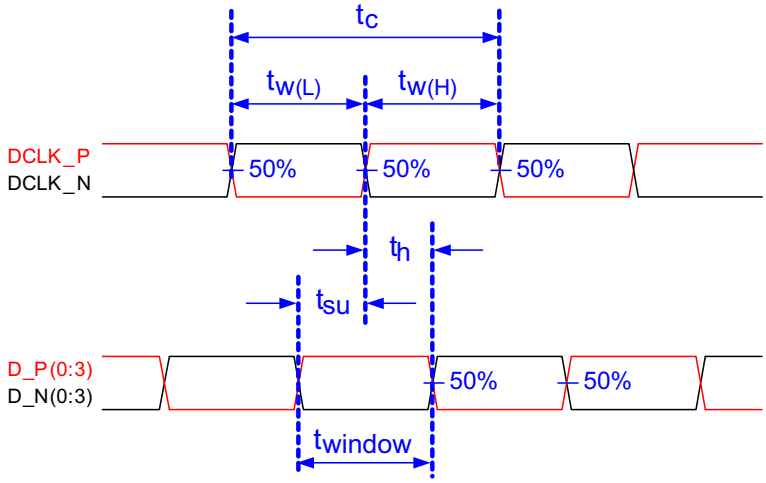

Figure 6-6. SubLVDS Switching Parameters

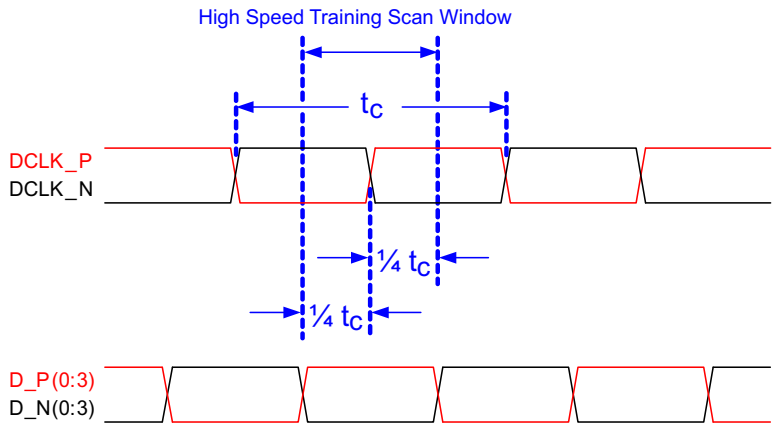

Note: Refer to *High-Speed Interface* for details.

Figure 6-7. High-Speed Training Scan Window

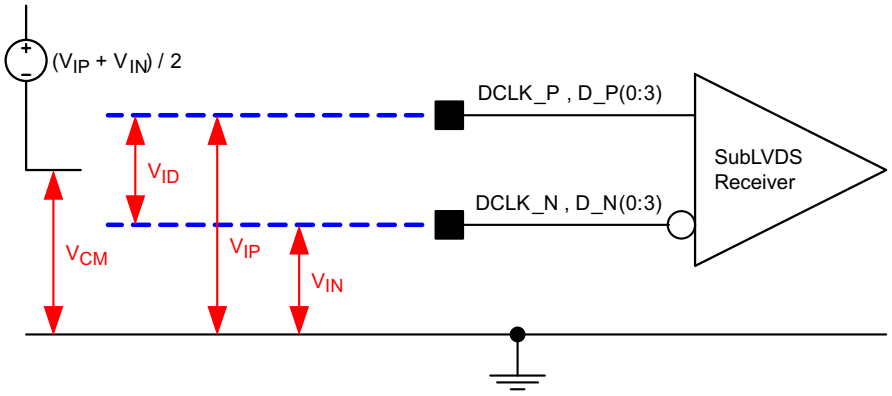

Figure 6-8. SubLVDS Voltage Parameters

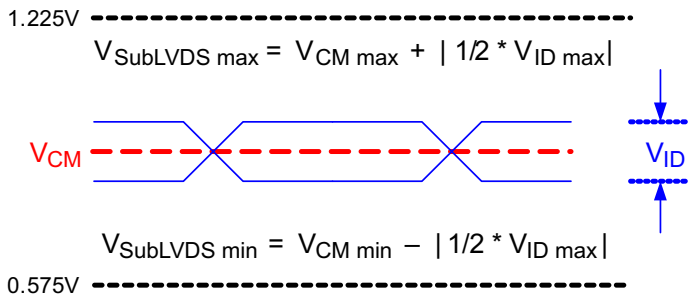

Figure 6-9. SubLVDS Waveform Parameters

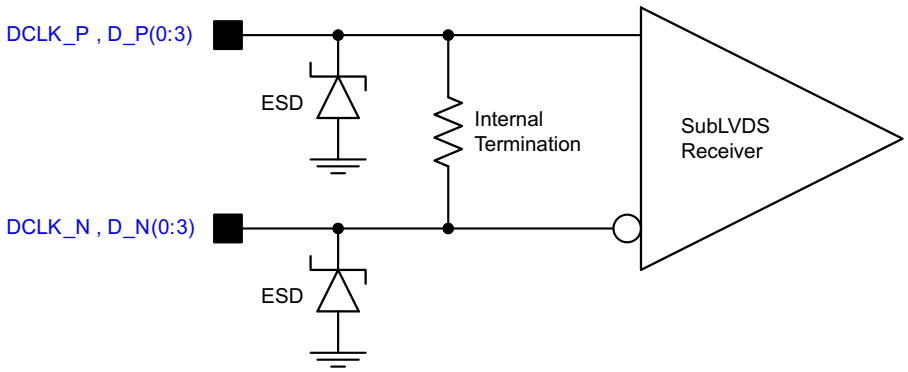

Figure 6-10. SubLVDS Equivalent Input Circuit

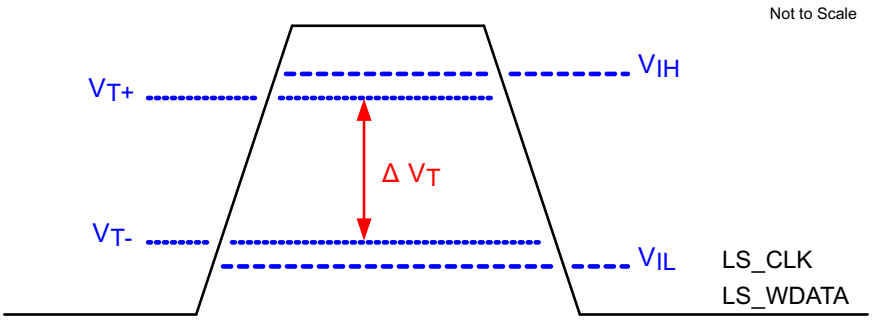

Figure 6-11. LPSDR Input Hysteresis

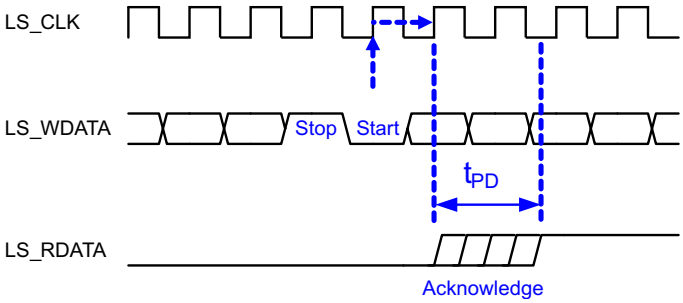

Figure 6-12. LPSDR Read Out

Copyright © 2022 Texas Instruments Incorporated

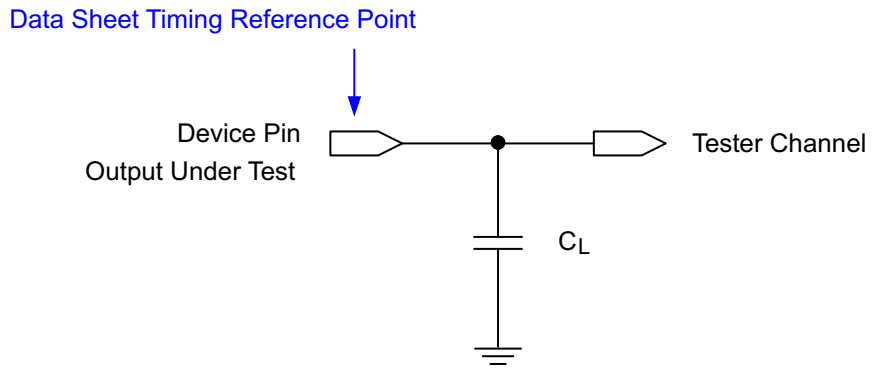

See *Timing* for more information.

Figure 6-13. Test Load Circuit for Output Propagation Measurement

6.8 Switching Characteristics

Over operating free-air temperature range (unless otherwise noted)[(1)]

PARAMETER		TEST CONDITIONS	MIN	TYP	MAX	UNIT
t_{PD}	Output propagation, Clock to Q, rising edge of LS_CLK input to LS_RDATA output. Figure 6-12	C_L = 45 pF			15	ns
	Slew rate, LS_RDATA		0.5			V/ns
	Output duty cycle distortion, LS_RDATA		40%		60%	

(1) Device electrical characteristics are over *Recommended Operating Conditions* unless otherwise noted.

6.9 System Mounting Interface Loads

PARAMETER	MIN	NOM	MAX	UNIT
Maximum system mounting interface load to be applied to the:				
• Connector area (see Figure 6-14)			45	N
• DMD mounting area uniformly distributed over 4 areas (see Figure 6-14)			100	N

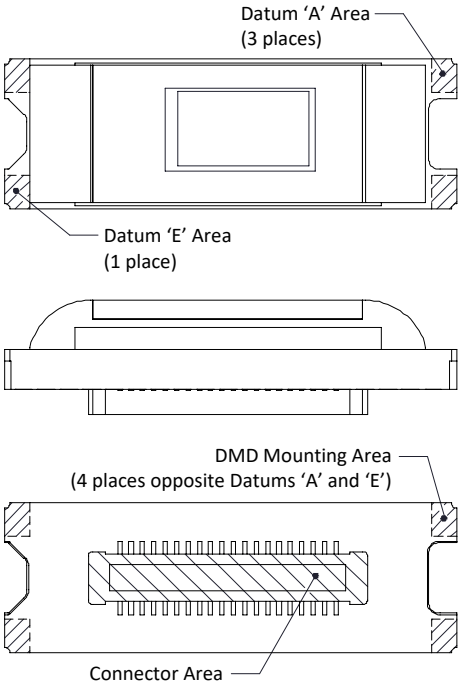

Figure 6-14. System Interface Loads

Copyright © 2022 Texas Instruments Incorporated

6.10 Physical Characteristics of the Micromirror Array

		VALUE	UNIT
Number of active columns	See Figure 6-15	854	micromirrors
Number of active rows	See Figure 6-15	480	micromirrors
ε Micromirror (pixel) pitch	See Figure 6-16	5.4	µm
Micromirror active array width	Micromirror pitch × number of active columns; see Figure 6-15	4.6116	mm
Micromirror active array height	Micromirror pitch × number of active rows; see Figure 6-15	2.592	mm
Micromirror active border	Pond of micromirror (POM)(1)	20	micromirrors/side

(1) The structure and qualities of the border around the active array includes a band of partially functional micromirrors called the POM. These micromirrors are structurally and/or electrically prevented from tilting toward the bright or ON state, but still require an electrical bias to tilt toward OFF.

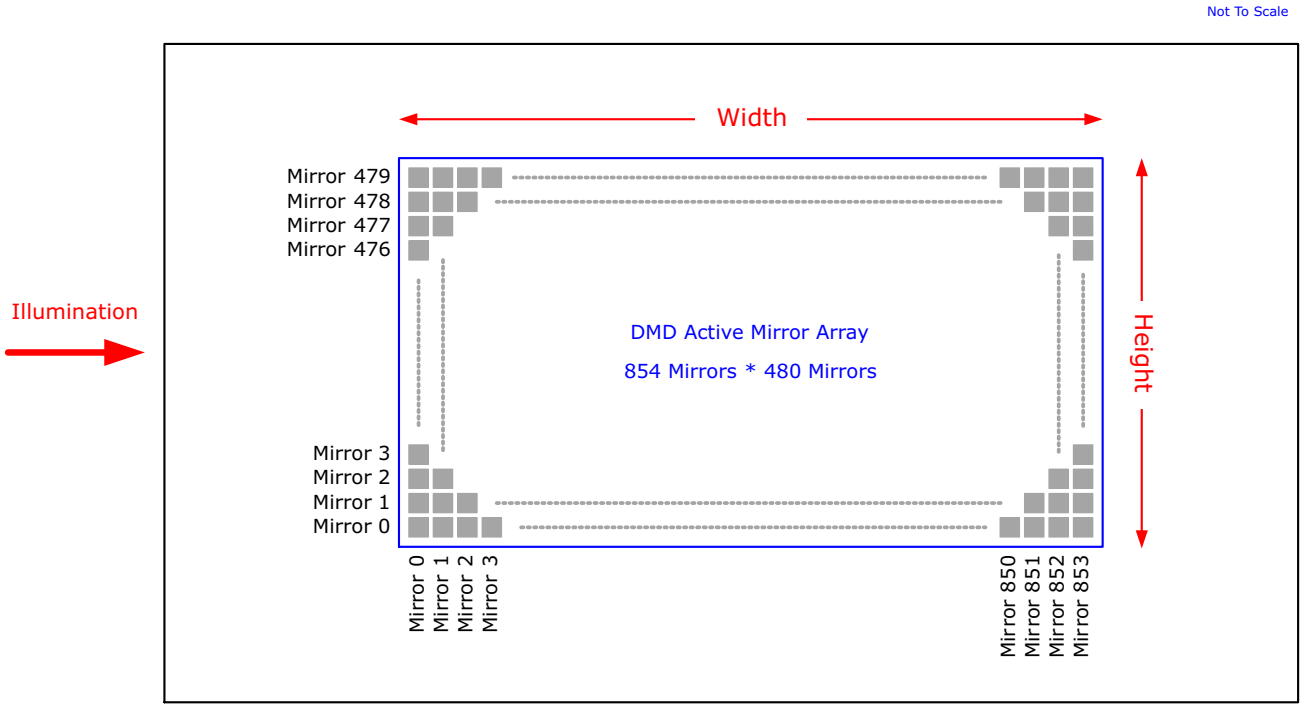

Figure 6-15. Micromirror Array Physical Characteristics

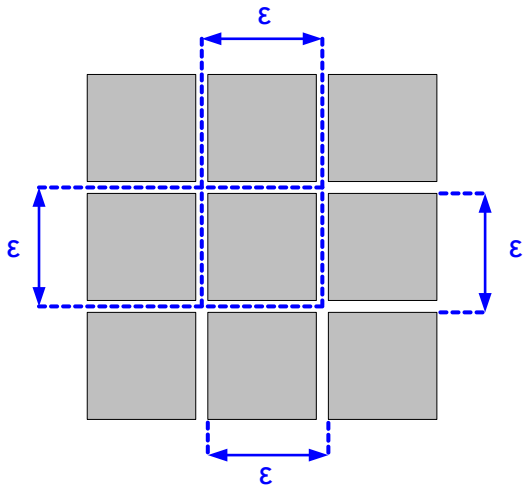

Figure 6-16. Mirror (Pixel) Pitch

6.11 Micromirror Array Optical Characteristics

PARAMETER		TEST CONDITIONS	MIN	NOM	MAX	UNIT
	Micromirror tilt angle	DMD landed state(1)		17		degrees
	Micromirror tilt angle tolerance(1) (2) (4) (5) (6)		–1.4		1.4	degrees
	Micromirror tilt direction(3) (7)	Landed ON state		180		degrees
		Landed OFF state		270		
	Micromirror crossover time	Typical Performance		1.5	4	µs
	Micromirror switching time	Typical Performance			6	
Image performance(8)	Bright pixel(s) in active area (9)	Gray 10 Screen (10)			0	micromirrors
	Bright pixel(s) in the POM (11)	Gray 10 Screen (10)			1	
	Dark pixel(s) in the active area (12)	White Screen			4	
	Adjacent pixel(s) (13)	Any Screen			0	
	Unstable pixel(s) in active area (14)	Any Screen			0	

(1) Measured relative to the plane formed by the overall micromirror array.
(2) Additional variation exists between the micromirror array and the package datums.
(3) When the micromirror array is landed (not parked), the tilt direction of each individual micromirror is dictated by the binary contents of the CMOS memory cell associated with each individual micromirror. A binary value of 1 results in a micromirror landing in the ON State direction. A binary value of 0 results in a micromirror landing in the OFF State direction.
(4) Represents the landed tilt angle variation relative to the nominal landed tilt angle.
(5) Represents the variation that can occur between any two individual micromirrors, located on the same device or located on different devices.
(6) For some applications, it is critical to account for the micromirror tilt angle variation in the overall system optical design. With some system optical designs, the micromirror tilt angle variation within a device may result in perceivable non-uniformities in the light field reflected from the micromirror array. With some system optical designs, the micromirror tilt angle variation between devices may result in colorimetry variations, system efficiency variations or system contrast variations.
(7) Micromirror tilt direction is measured as in a typical polar coordinate system: measuring counter-clockwise from a 0° reference which is aligned with the +X Cartesian axis.
(8) Conditions of Acceptance: All DMD image quality returns will be evaluated using the following projected image test conditions:
Test set degamma shall be linear
Test set brightness and contrast shall be set to nominal
The diagonal size of the projected image shall be a minimum of 20 inches
The projections screen shall be 1X gain
The projected image shall be inspected from a 38 inch minimum viewing distance
The image shall be in focus during all image quality tests
(9) Bright pixel definition: A single pixel or mirror that is stuck in the ON position and is visibly brighter than the surrounding pixels
(10) Gray 10 screen definition: All areas of the screen are colored with the following settings:
Red = 10/255
Green = 10/255
Blue = 10/255
(11) POM definition: Rectangular border of off-state mirrors surrounding the active area
(12) Dark pixel definition: A single pixel or mirror that is stuck in the OFF position and is visibly darker than the surrounding pixels
(13) Adjacent pixel definition: Two or more stuck pixels sharing a common border or common point, also referred to as a cluster
(14) Unstable pixel definition: A single pixel or mirror that does not operate in sequence with parameters loaded into memory. The unstable pixel appears to be flickering asynchronously with the image

Copyright © 2022 Texas Instruments Incorporated

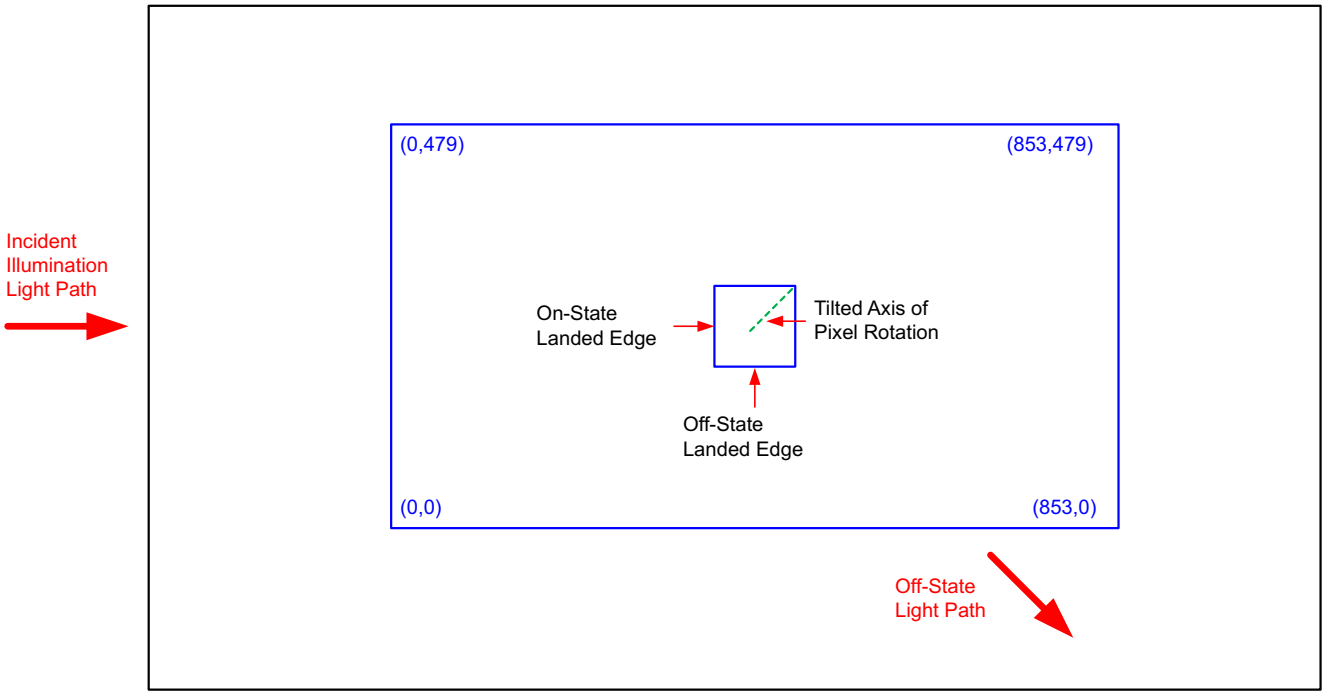

Figure 6-17. Landed Pixel Orientation and Tilt

6.12 Window Characteristics

PARAMETER[3]		MIN	NOM	MAX	UNIT
Window material designation			Corning Eagle XG		
Window refractive index	at wavelength 546.1 nm		1.5119		
Window aperture[1]				See [1]	
Illumination overfill[2]				See [2]	
Window transmittance, single-pass through both surfaces and glass	Minimum within the wavelength range 700 to 2000 nm. at 0° angle of incidence.	92	96		%
Window transmittance, single-pass through both surfaces and glass	Minimum within the wavelength range 2000 to 2500 nm. at 0° angle of incidence.	85	90		%

(1) See the package mechanical characteristics for details regarding the size and location of the window aperture.
(2) The active area of the DLP2010NIR device is surrounded by an aperture on the inside of the DMD window surface that masks structures of the DMD device assembly from normal view. The aperture is sized to anticipate several optical conditions. Overfill light illuminating the area outside the active array can scatter and create adverse effects to the performance of an end application using the DMD. The illumination optical system should be designed to limit light flux incident outside the active array to less than 10% of the average flux level in the active area. Depending on the particular system's optical architecture and assembly tolerances, the amount of overfill light on the outside of the active array may cause system performance degradation.
(3) See *Optical Interface and System Image Quality Considerations* for more information.

6.13 Chipset Component Usage Specification

The DLP2010NIR is a component of one or more DLP chipsets. Reliable function and operation of the DLP2010NIR requires that it be used in conjunction with the other components of the applicable DLP chipset, including those components that contain or implement TI DMD control technology. TI DMD control technology is the TI technology and devices for operating or controlling a DLP DMD.

Copyright © 2022 Texas Instruments Incorporated

Note

TI assumes no responsibility for image quality artifacts or DMD failures caused by optical system operating conditions exceeding limits described previously.

6.13.1 Software Requirements

Note

The DLP2010NIR DMD has mandatory software requirements. Refer to *Software Requirements for TI DLP™ Pico™ TRP Digital Micromirror Devices* application report for additional information. Failure to use the specified software will result in failure at power up.

6.14 Typical Characteristics

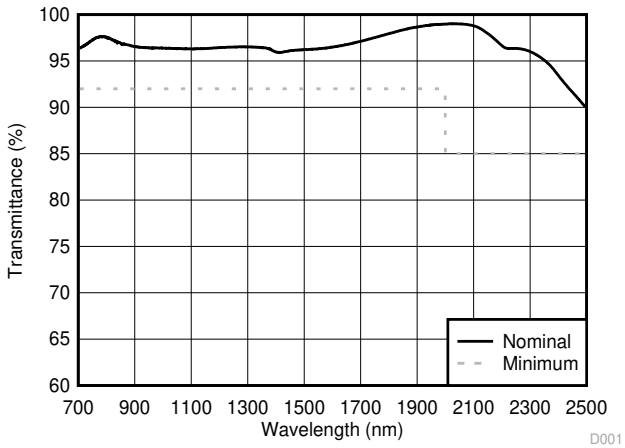

Figure 6-18. DLP2010NIR DMD Window Transmittance

Copyright © 2022 Texas Instruments Incorporated

7 Detailed Description

7.1 Overview

The DLP2010NIR is a 0.2 inch diagonal spatial light modulator designed for near-infrared applications. Pixel array size is 854 columns by 480 rows in a square grid pixel arrangement. The electrical interface is Sub Low Voltage Differential Signaling (SubLVDS) data.

DLP2010NIR is one device in a chipset, which includes the DLP2010NIR DMD, the DLPC150/3470 controller and the DLPA200X (DLPA2000 or DLPA2005) PMIC. To ensure reliable operation, the DLP2010NIR DMD must always be used with a DLPC150/3470 controller and a DLPA200X PMIC.

7.2 Functional Block Diagram

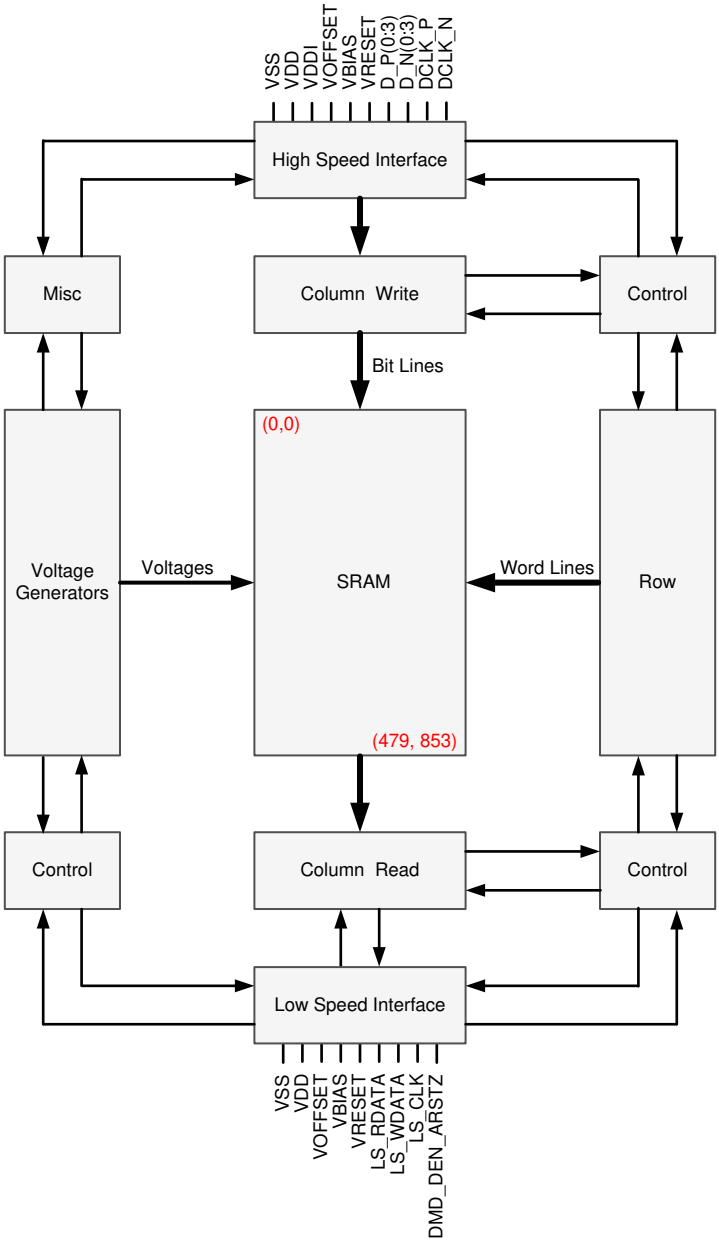

Note

Details omitted for clarity.

7.3 Feature Description

7.3.1 Power Interface

The power management IC, DLPA200X, contains 3 regulated DC supplies for the DMD reset circuitry: VBIAS, VRESET and VOFFSET, as well as the 2 regulated DC supplies for the DLPC150/3470 controller.

7.3.2 Low-Speed Interface

The Low Speed Interface handles instructions that configure the DMD and control reset operation. LS_CLK is the low–speed clock, and LS_WDATA is the low speed data input.

7.3.3 High-Speed Interface

The purpose of the high-speed interface is to transfer pixel data rapidly and efficiently, making use of high speed DDR transfer and compression techniques to save power and time. The high-speed interface is composed of differential SubLVDS receivers for inputs, with a dedicated clock.

7.3.4 Timing

The data sheet provides timing at the device pin. For output timing analysis, the tester pin electronics and its transmission line effects must be taken into account. Figure 6-13 shows an equivalent test load circuit for the output under test. Timing reference loads are not intended as a precise representation of any particular system environment or depiction of the actual load presented by a production test. System designers should use IBIS or other simulation tools to correlate the timing reference load to a system environment. The load capacitance value stated is only for characterization and measurement of AC timing signals. This load capacitance value does not indicate the maximum load the device is capable of driving.

7.4 Device Functional Modes

DMD functional modes are controlled by the DLPC150/3470 controller. See the DLPC150/DLPC3470 controller data sheet or contact a TI applications engineer.

7.5 Optical Interface and System Image Quality Considerations

Note

TI assumes no responsibility for image quality artifacts or DMD failures caused by optical system operating conditions exceeding limits described previously.

7.5.1 Optical Interface and System Image Quality

TI assumes no responsibility for end-equipment optical performance. Achieving the desired end-equipment optical performance involves making trade-offs between numerous component and system design parameters. Although it is not possible to anticipate every conceivable application, projector image quality and optical performance is contingent on compliance to the optical system operating conditions described in the following sections:

7.5.1.1 Numerical Aperture and Stray Light Control

The angle defined by the numerical aperture of the illumination and projection optics at the DMD optical area should be the same. This angle should not exceed the nominal device mirror tilt angle unless appropriate apertures are added in the illumination and/or projection pupils to block out flat-state and stray light from the projection lens. The micromirror tilt angle defines DMD capability to separate the "ON" optical path from any other light path, including undesirable flat–state specular reflections from the DMD window, DMD border structures, or other system surfaces near the DMD such as prism or lens surfaces. If the numerical aperture exceeds the micromirror tilt angle, or if the projection numerical aperture angle is more than two degrees larger than the illumination numerical aperture angle (and vice versa), contrast degradation and objectionable artifacts in the display's border and/or active area could occur.

Copyright © 2022 Texas Instruments Incorporated

7.5.1.2 Pupil Match

TI's optical and image quality specifications assume that the exit pupil of the illumination optics is nominally centered within 2° of the entrance pupil of the projection optics. Misalignment of pupils can create objectionable artifacts in the display's border and/or active area, which may require additional system apertures to control, especially if the numerical aperture of the system exceeds the pixel tilt angle.

7.5.1.3 Illumination Overfill

The active area of the device is surrounded by an aperture on the inside DMD window surface that masks structures of the DMD chip assembly from normal view, and is sized to anticipate several optical operating conditions. Overfill light illuminating the window aperture can create artifacts from the edge of the window aperture opening and other surface anomalies that may be visible on the screen. The illumination optical system should be designed to limit light flux incident anywhere on the window aperture from exceeding approximately 10% of the average flux level in the active area. Depending on the particular system's optical architecture, overfill light may have to be further reduced below the suggested 10% level in order to be acceptable.

7.6 Micromirror Array Temperature Calculation

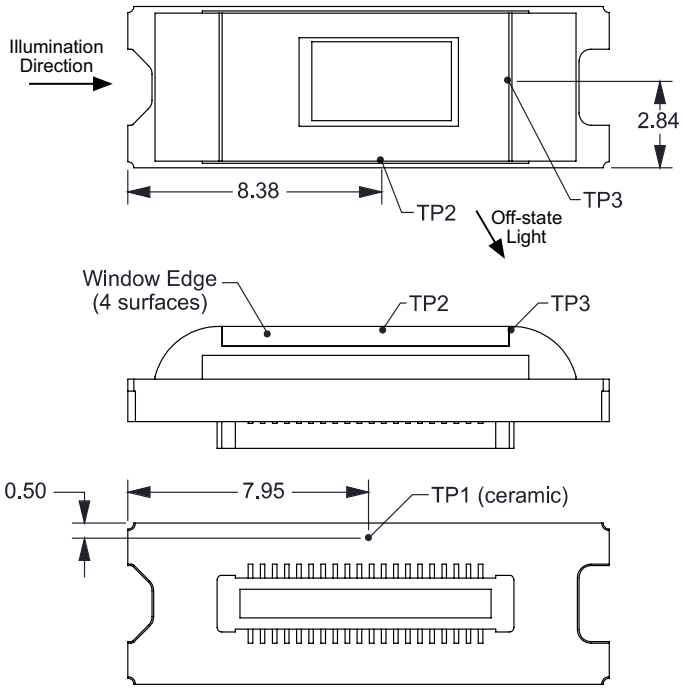

Figure 7-1. DMD Thermal Test Points

Micromirror array temperature can be computed analytically from measurement points on the outside of the package, the ceramic package thermal resistance, the electrical power dissipation, and the illumination heat load. The relationship between micromirror array temperature and the reference ceramic temperature is provided by the following equations:

$$T_{ARRAY} = T_{CERAMIC} + (Q_{ARRAY} \times R_{ARRAY-TO-CERAMIC}) \quad (1)$$

$$Q_{ARRAY} = Q_{ELECTRICAL} + Q_{ILLUMINATION} \quad (2)$$

$$Q_{ILLUMINATION} = (A_{ILLUMINATION} \times P_{NIR} \text{ X DMD absorption factor}) \quad (3)$$

where

- T_{ARRAY} = Computed DMD array temperature (°C)
- $T_{CERAMIC}$ = Measured ceramic temperature (°C), TP1 location in Figure 7-1

- $R_{ARRAY–TO–CERAMIC}$ = DMD package thermal resistance from array to outside ceramic (°C/W) specified in *Section 6.5*
- Q_{ARRAY} = Total DMD power; electrical, specified in *Electrical Characteristics*, plus absorbed (calculated) (W)
- $Q_{ELECTRICAL}$ = Nominal DMD electrical power dissipation (W), specified in *Electrical Characteristics*
- $A_{ILLUMINATION}$ = Illumination area (assumes 83.7% on the active array and 16.3% overfill)
- P_{NIR} = Illumination Power Density (W/cm^2)

Electrical power dissipation of the DMD is variable and depends on the voltages, data rates and operating frequencies. Refer to the specifications in *Electrical Characteristics*. Absorbed power from the illumination source is variable and depends on the operating state of the mirrors and the intensity of the light source. The DMD absorption constant of 0.42 assumes nominal operation with an illumination distribution of 83.7% on the DMD active array, and 16.3% on the DMD array border and window aperture.

A sample calculation is detailed below:

$T_{CERAMIC}$ = 35 °C, assumed system measurement; see *Recommended Operating Conditions* for specification limits

P_{NIR}= 2 W/cm^2

$Q_{ELECTRICAL}$ = 0.0908 W; See the table notes in *Recommended Operating Conditions* for details.

$A_{ILLUMINATION}$ = 0.143 cm^2

Q_{ARRAY} = $Q_{ELECTRICAL}$ + ($Q_{ILLUMINATION}$ X DMD absoprtion factor) = 0.0908 W + (2 W/cm^2 X 0.143 cm^2 X 0.42) = 0.211 W

T_{ARRAY} = 35 °C + (0.211 W × 7.9°C/W) = 36.67 °C

7.7 Micromirror Landed-On/Landed-Off Duty Cycle

7.7.1 Definition of Micromirror Landed-On/Landed-Off Duty Cycle

The micromirror landed-on/landed-off duty cycle (landed duty cycle) denotes the amount of time (as a percentage) that an individual micromirror is landed in the ON state versus the amount of time the same micromirror is landed in the OFF state.

As an example, a landed duty cycle of 75/25 indicates that the referenced pixel is in the ON state 75% of the time and in the OFF state 25% of the time, whereas 25/75 would indicate that the pixel is in the ON state 25% of the time. Likewise, 50/50 indicates that the pixel is ON 50% of the time and OFF 50% of the time. Note that when assessing landed duty cycle, the time spent switching from one state (ON or OFF) to the other state (OFF or ON) is considered negligible and is thus ignored. Since a micromirror can only be landed in one state or the other (ON or OFF), the two numbers (percentages) nominally add to 100.

7.7.2 Landed Duty Cycle and Useful Life of the DMD

Knowing the long-term average landed duty cycle (of the end product or application) is important because subjecting all (or a portion) of the DMD's micromirror array (also called the active array) to an asymmetric landed duty cycle for a prolonged period of time can reduce the DMD's usable life.

Note that it is the symmetry/asymmetry of the landed duty cycle that is of relevance. The symmetry of the landed duty cycle is determined by how close the two numbers (percentages) are to being equal. For example, a landed duty cycle of 50/50 is perfectly symmetrical whereas a landed duty cycle of 100/0 or 0/100 is perfectly asymmetrical.

7.7.3 Landed Duty Cycle and Operational DMD Temperature

Operational DMD Temperature and Landed Duty Cycle interact to affect the DMD's usable life, and this interaction can be exploited to reduce the impact that an asymmetrical Landed Duty Cycle has on the DMD's usable life. This is quantified in the de-rating curve shown in Figure 6-1. The importance of this curve is that:

- All points along this curve represent the same usable life.
- All points above this curve represent lower usable life (and the further away from the curve, the lower the usable life).
- All points below this curve represent higher usable life (and the further away from the curve, the higher the usable life).

Copyright © 2022 Texas Instruments Incorporated

In practice, this curve specifies the Maximum Operating DMD Temperature that the DMD should be operated at for a give long-term average Landed Duty Cycle.

7.7.4 Estimating the Long-Term Average Landed Duty Cycle of a Product or Application

During a given period of time, the Landed Duty Cycle of a given pixel follows from the image content being displayed by that pixel.

For example, in binary pattern display with value '1' or when displaying pure-white on a given pixel for a given time period, that pixel will experience a 100/0 Landed Duty Cycle during that time period. Likewise, a binary pattern display with value '0' or when displaying pure-black, the pixel will experience a 0/100 Landed Duty Cycle.

Table 7-1. Binary Pattern Mode Example: Binary Value and Landed Duty Cycle

BINARY VALUE	NOMINAL LANDED DUTY CYCLE
0	0/100
1	100/0

During a given period of time, the landed duty cycle of a given pixel can be calculated as follows:

$$\text{Landed Duty Cycle} = \sum\{\text{Pattern[i]_Binary_Value}\} / \{\text{Total_Patterns}\} \quad (4)$$

where

- Pattern[i]_Binary_Value represent a pixel's pattern and its corresponding binary value over all patterns in the pattern sequence: Total_Patterns.

For example, assume a pattern sequence with three patterns using pixel x. In this sequence the first pattern has pixel x on, the second pattern has pixel x off, and the third pattern has pixel x off. Thus, the Landed Duty Cycle is 33%.

8 Application and Implementation

Note

Information in the following applications sections is not part of the TI component specification, and TI does not warrant its accuracy or completeness. TI's customers are responsible for determining suitability of components for their purposes, as well as validating and testing their design implementation to confirm system functionality.

8.1 Application Information

The DMDs are spatial light modulators which reflect incoming light from an illumination source to one of two directions, with the primary direction being into a projection or collection optic. Each application is derived primarily from the optical architecture of the system and the format of the data coming into the DLPC150/3470 controller. The new high tilt pixel in the side illuminated DMD increases device efficiency and enables a compact optical system. The DLP2010NIR DMD can be combined with a grating and single element detector to replace expensive InGaAs linear array detector designs, leading to high performance, cost-effective portable NIR Spectroscopy solutions. Applications of interest include machine vision systems, spectrometers, medical systems, skin analysis, material identification, chemical sensing, infrared projection, and compressive sensing.

DMD power-up and power-down sequencing is strictly controlled by the DLPA2000 or DLPA2005. Refer to *Power Supply Recommendations* for power-up and power-down specifications. DLP2010NIR DMD reliability is only specified when used with DLPC150/3470 controller and DLPA2000 or DLPA2005 PMIC/LED Driver.

8.2 Typical Application

A typical embedded system application using the DLPC150/3470 controller and DLP2010NIR is shown in Figure 8-1. In this configuration, the DLPC150/3470 controller supports a 24-bit parallel RGB input, typical of LCD interfaces, from an external source or processor. The DLPC150/3470 controller processes the digital input image and converts the data into the format needed by the DLP2010NIR. The DLP2010NIR steers light by setting specific micromirrors to the *on* position, directing light to the detector, while unwanted micromirrors are set to "off" position, directing light away from the detector. The microprocessor sends binary images to the DMD to steer specific wavelengths of light into the detector. The microprocessor uses an analog-to-digital converter to sample the signal received by the detector into a digital value. By sequentially selecting different wavelengths of light and capturing the values at the detector, the microprocessor can then plot a spectral response to the light.

Copyright © 2022 Texas Instruments Incorporated

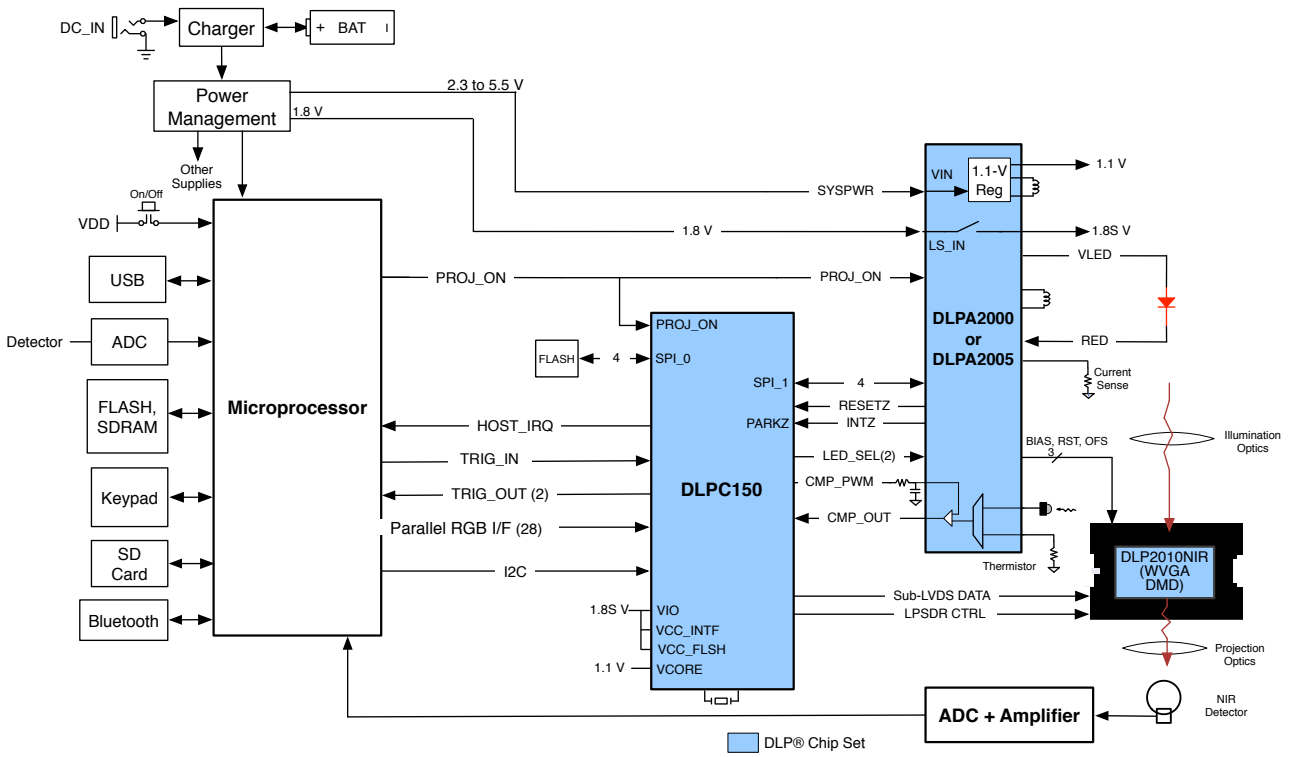

Figure 8-1. Typical Application Diagram

8.2.1 Design Requirements

All applications using DLP 0.2-inch WVGA chipset require the DLPC150/3470 controller, DLPA2000 or DLPA2005 PMIC, and DLP2010NIR DMD components for operation. The system also requires an external SPI flash memory device loaded with the DLPC150/3470 Configuration and Support Firmware. The chipset has several system interfaces and requires some support circuitry. The following interfaces and support circuitry are required for the DLP2010NIR:

- DMD Interfaces:
  - DLPC150/3470 to DLP2010NIR SubLVDS Digital Data
  - DLPC150/3470 to DLP2010NIR LPSDR Control Interface
- DMD Power:
  - DLPA2000 or DLPA2005 to DLP2010NIR VBIAS Supply
  - DLPA2000 or DLPA2005 to DLP2010NIR VOFFSET Supply
  - DLPA2000 or DLPA2005 to DLP2010NIR VRESET Supply
  - DLPA2000 or DLPA2005 to DLP2010NIR VDDI Supply
  - DLPA2000 or DLPA2005 to DLP2010NIR VDD Supply

The illumination light that is applied to the DMD is typically from an infrared LED or lamp.

8.2.2 Detailed Design Procedure

For connecting together the DLPC150/3470, the DLPA2005, and the DLP2010NIR DMD, see the TI DLP NIRscan Nano EVM reference design schematic.

8.2.3 Application Curve

In a reflective spectroscopy application, a broadband light source illuminates a sample and the reflected light spectrum is dispersed onto the DLP2010NIR. A microprocessor in conjunction with the DLPC150/3470 controls individual DLP2010NIR micromirrors to reflect specific wavelengths of light to a single point detector. The microprocessor uses an analog-to-digital converter to sample the signal received by the detector into a digital

value. By sequentially selecting different wavelengths of light and capturing the values at the detector, the microprocessor can then plot a spectral response to the light. This systems allows the measurement of the collected light and derive the wavelengths absorbed by the sample. This process leads to the absorption spectrum shown in Figure 8-2.

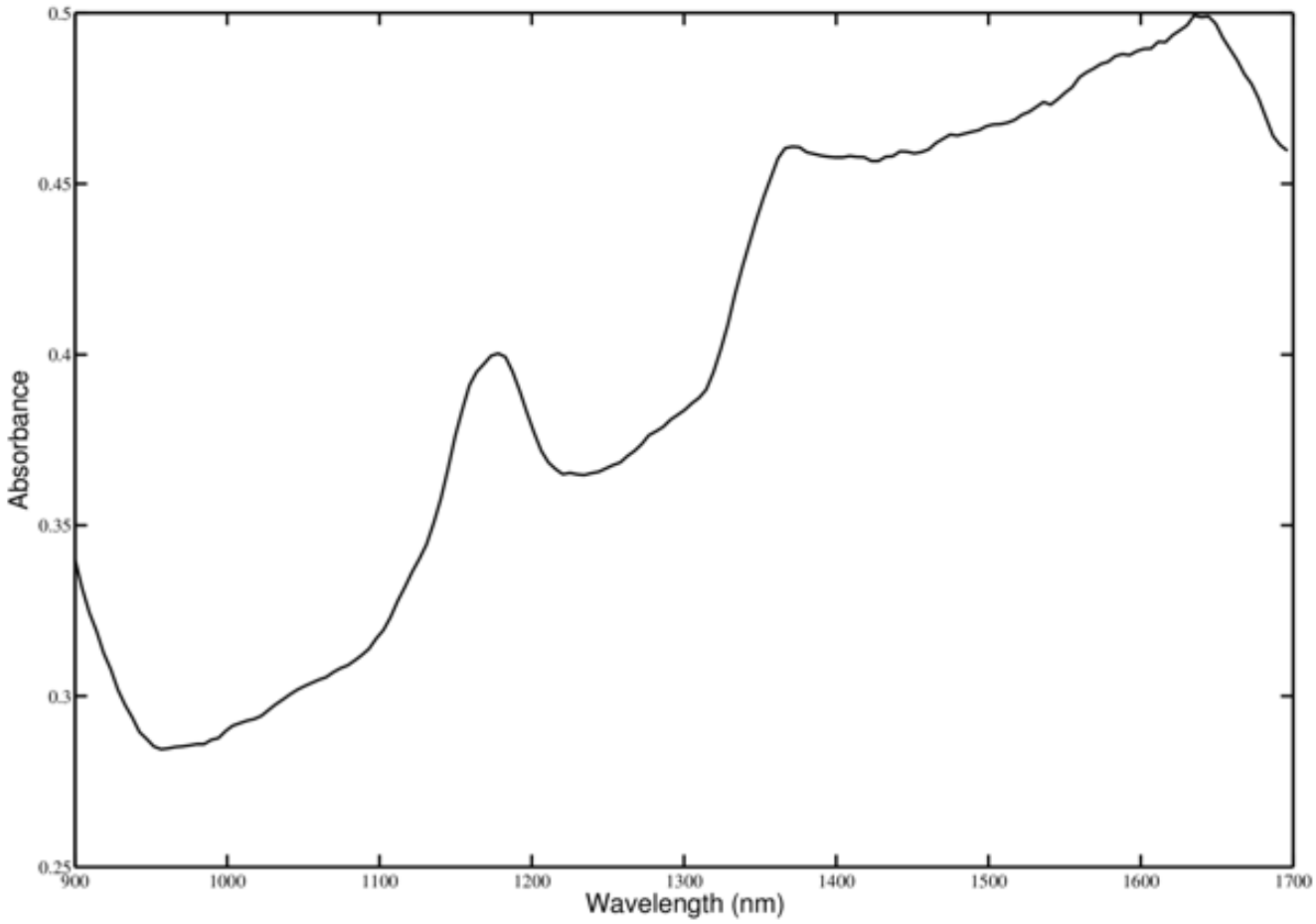

Figure 8-2. Sample DLP2010NIR Based Spectrometer Output

Copyright © 2022 Texas Instruments Incorporated

9 Power Supply Recommendations

The following power supplies are all required to operate the DMD: VSS, VDD, VDDI, VOFFSET, VBIAS, and VRESET. DMD power-up and power-down sequencing is strictly controlled by the DLPAxxxx device.

Note

For reliable operation of the DMD, the following power supply sequencing requirements must be followed. Failure to adhere to the prescribed power-up and power-down procedures may affect device reliability.

VDD, VDDI, VOFFSET, VBIAS, and VRESET power supplies have to be coordinated during power-up and power-down operations. Failure to meet any of the below requirements will result in a significant reduction in the DMD's reliability and lifetime. Refer to Figure 9-2. VSS must also be connected.

9.1 Power Supply Power-Up Procedure

- During power-up, VDD and VDDI must always start and settle before VOFFSET, VBIAS, and VRESET voltages are applied to the DMD.
- During power-up, it is a strict requirement that the delta between VBIAS and VOFFSET must be within the specified limit shown in *Recommended Operating Conditions*. Refer to Table 9-1 and the *Layout Example* for power-up delay requirements.
- During power-up, the DMD's LPSDR input pins shall not be driven high until after VDD and VDDI have settled at operating voltage.
- During power-up, there is no requirement for the relative timing of VRESET with respect to VOFFSET and VBIAS. Power supply slew rates during power-up are flexible, provided that the transient voltage levels follow the requirements listed previously and in Figure 9-1.

9.2 Power Supply Power-Down Procedure

- Power-down sequence is the reverse order of the previous power-up sequence. VDD and VDDI must be supplied until after VBIAS, VRESET, and VOFFSET are discharged to within 4 V of ground.
- During power-down, it is not mandatory to stop driving VBIAS prior to VOFFSET, but it is a strict requirement that the delta between VBIAS and VOFFSET must be within the specified limit shown in *Recommended Operating Conditions* (Refer to Note 2 for Figure 9-1).
- During power-down, the DMD's LPSDR input pins must be less than VDDI, the specified limit shown in *Recommended Operating Conditions*.
- During power-down, there is no requirement for the relative timing of VRESET with respect to VOFFSET and VBIAS.
- Power supply slew rates during power-down are flexible, provided that the transient voltage levels follow the requirements listed previously and in Figure 9-1.

Copyright © 2022 Texas Instruments Incorporated

9.3 Power Supply Sequencing Requirements

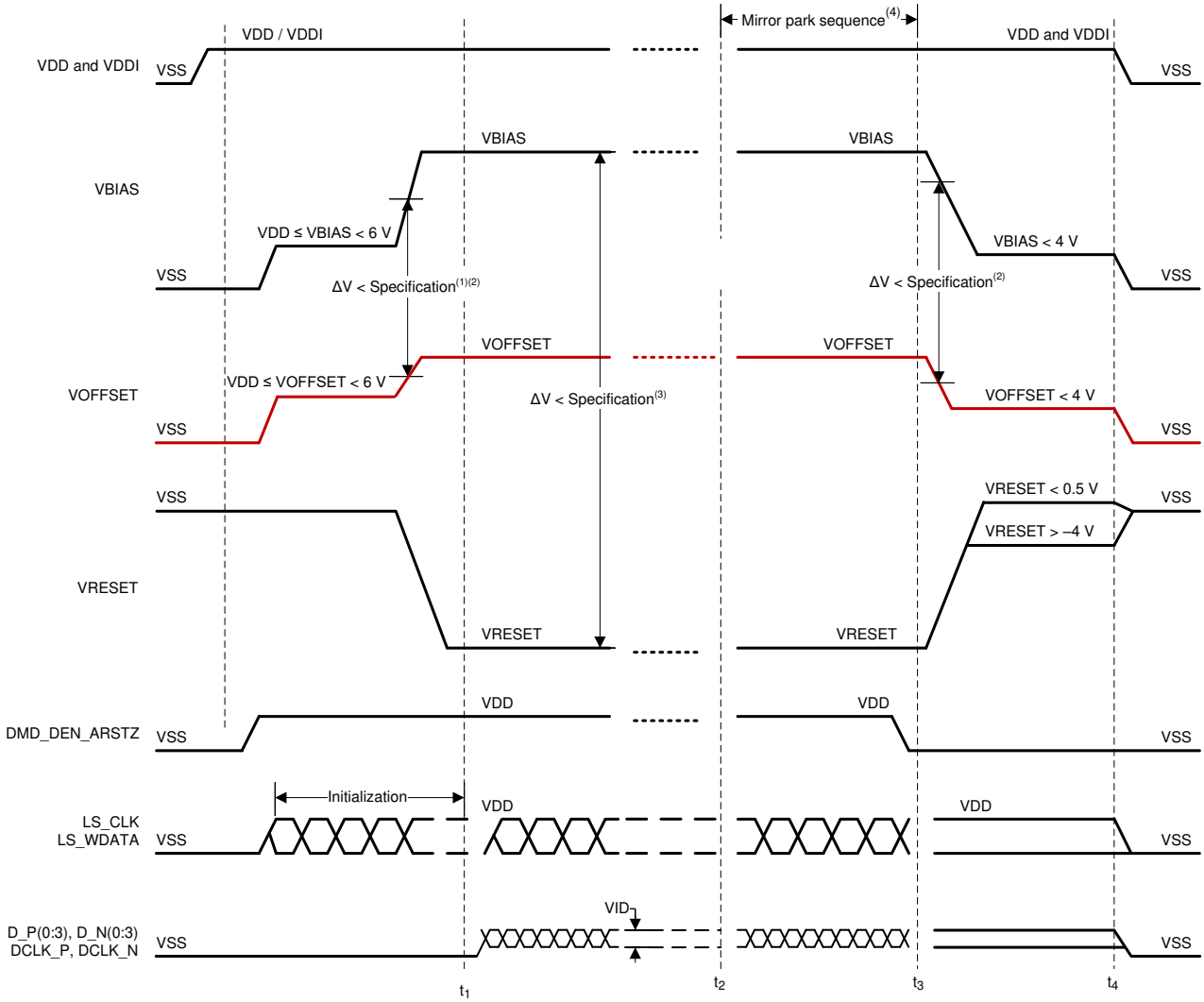

A. Refer to Table 9-1 and Figure 9-2 for critical power-up sequence delay requirements.
B. To prevent excess current, the supply voltage delta |VBIAS – VOFFSET| must be less than specified in *Recommended Operating Conditions*. OEMs may find that the most reliable way to ensure this is to power VOFFSET prior to VBIAS during power-up and to remove VBIAS prior to VOFFSET during power-down. Refer to Table 9-1 and Figure 9-2 for power-up delay requirements.
C. To prevent excess current, the supply voltage delta |VBIAS – VRESET| must be less than specified limit shown in *Recommended Operating Conditions*.
D. When system power is interrupted, the ASIC driver initiates hardware power-down that disables VBIAS, VRESET and VOFFSET after the Micromirror Park Sequence. Software power-down disables VBIAS, VRESET, and VOFFSET after the Micromirror Park Sequence through software control.
E. Drawing is not to scale and details are omitted for clarity.

Figure 9-1. Power Supply Sequencing Requirements (Power Up and Power Down)

Table 9-1. Power-Up Sequence Delay Requirement

PARAMETER		MIN	MAX	UNIT
t_{DELAY}	Delay requirement from VOFFSET power up to VBIAS power up	2		ms
V_{OFFSET}	Supply voltage level during power–up sequence delay (see Figure 9-2)		6	V
V_{BIAS}	Supply voltage level during power–up sequence delay (see Figure 9-2)		6	V

Copyright © 2022 Texas Instruments Incorporated

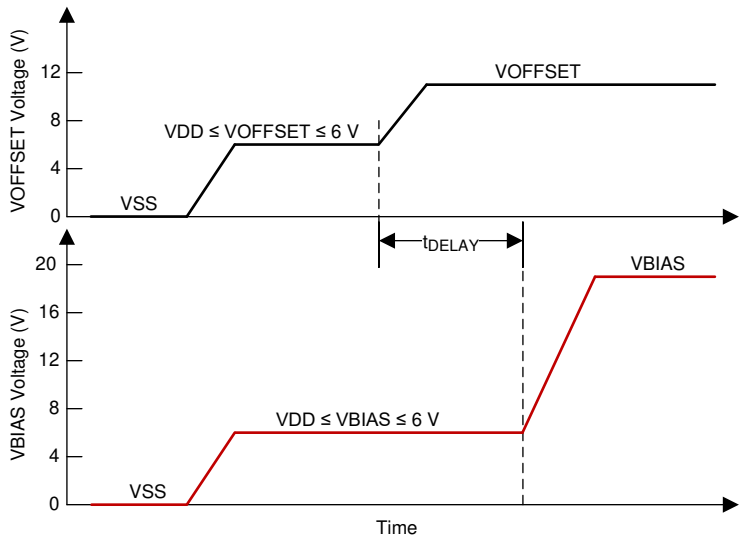

Note

Refer to Table 9-1 for VOFFSET and VBIAS supply voltage levels during power-up sequence delay.

Figure 9-2. Power-Up Sequence Delay Requirement

10 Layout

10.1 Layout Guidelines

There are no specific layout guidelines for the DMD as typically DMD is connected using a board or board-to-board connector to a flex cable. For detailed layout guidelines refer to the layout design files. Some layout guideline for the flex cable interface with DMD are:

- Match lengths for the LS_WDATA and LS_CLK signals.
- Minimize vias, layer changes, and turns for the HS bus signals. Refer Figure 10-1.
- Minimum of 100-nF decoupling capacitor close to VBIAS. Capacitor C4 in Figure 10-2.
- Minimum of 100-nF decoupling capacitor close to VRESET. Capacitor C6 in Figure 10-2.
- Minimum of 220-nF decoupling capacitor close to VOFFSET. Capacitor C7 in Figure 10-2.
- Optional minimum 200- to 220-nF decoupling capacitor to meet the ripple requirements of the DMD. C5 in Figure 10-2.
- Minimum of 100-nF decoupling capacitor close to VCCI. Capacitor C1 in Figure 10-2.
- Minimum of 100-nF decoupling capacitor close to both groups of VCC pins, for a total of 200 nF for VCC. Capacitor C2/C3 in Figure 10-2.

10.2 Layout Example

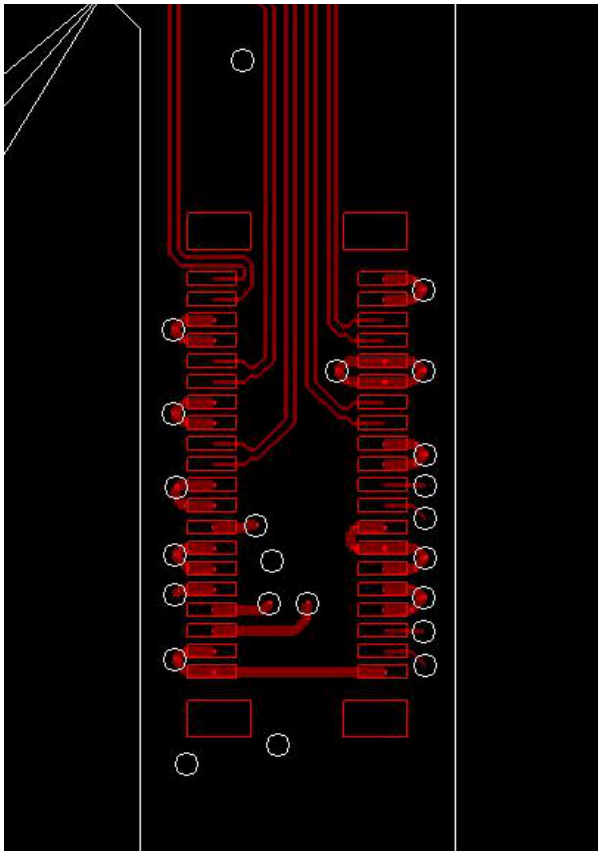

Figure 10-1. High-Speed (HS) Bus Connections

Copyright © 2022 Texas Instruments Incorporated

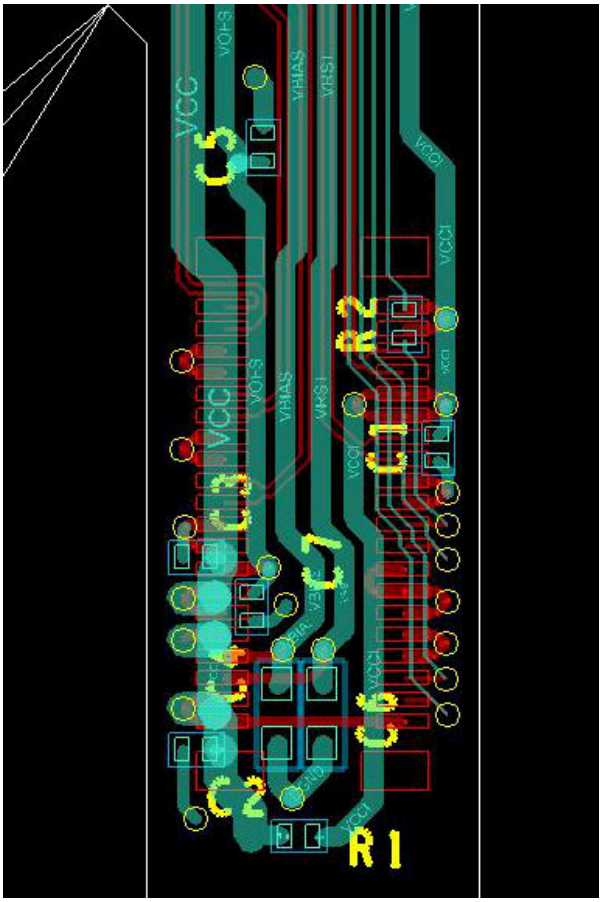

Figure 10-2. Power Supply Connections

11 Device and Documentation Support

11.1 Device Support

11.1.1 Third-Party Products Disclaimer

TI'S PUBLICATION OF INFORMATION REGARDING THIRD-PARTY PRODUCTS OR SERVICES DOES NOT CONSTITUTE AN ENDORSEMENT REGARDING THE SUITABILITY OF SUCH PRODUCTS OR SERVICES OR A WARRANTY, REPRESENTATION OR ENDORSEMENT OF SUCH PRODUCTS OR SERVICES, EITHER ALONE OR IN COMBINATION WITH ANY TI PRODUCT OR SERVICE.

11.1.2 Device Nomenclature

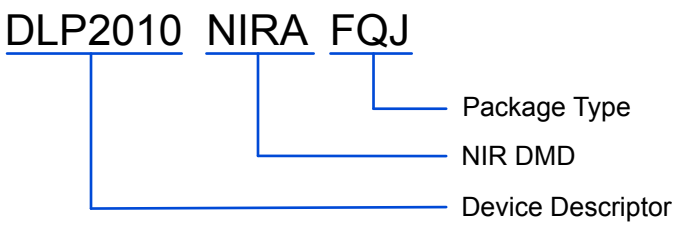

Figure 11-1. Part Number Description

11.1.3 Device Markings

Device Marking will include the human–readable character string GHJJJJK VVVV on the electrical connector. GHJJJJK is the lot trace code. VVVV is a 4 character encoded device part number

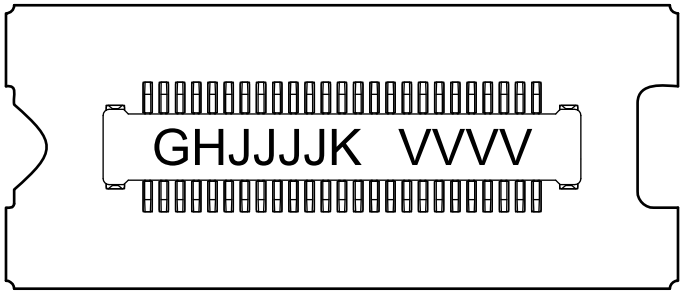

Figure 11-2. DMD Marking

11.2 Related Links

The table below lists quick access links. Categories include technical documents, support and community resources, tools and software, and quick access to sample or buy.

Table 11-1. Related Links

PARTS	PRODUCT FOLDER	SAMPLE & BUY	TECHNICAL DOCUMENTS	TOOLS & SOFTWARE	SUPPORT & COMMUNITY
DLPC150	Click here	Click here	Click here	Click here	Click here
DLPC3470	Click here	Click here	Click here	Click here	Click here
DLPA2000	Click here	Click here	Click here	Click here	Click here
DLPA2005	Click here	Click here	Click here	Click here	Click here

11.3 Receiving Notification of Documentation Updates

To receive notification of documentation updates, navigate to the device product folder on ti.com. Click on *Subscribe to updates* to register and receive a weekly digest of any product information that has changed. For change details, review the revision history included in any revised document.

Copyright © 2022 Texas Instruments Incorporated

11.4 Support Resources

TI E2E™ support forums are an engineer's go-to source for fast, verified answers and design help — straight from the experts. Search existing answers or ask your own question to get the quick design help you need.

Linked content is provided "AS IS" by the respective contributors. They do not constitute TI specifications and do not necessarily reflect TI's views; see TI's Terms of Use.

11.5 Trademarks

DLP™, Pico™, and TI E2E™ are trademarks of Texas Instruments.
All trademarks are the property of their respective owners.

11.6 Electrostatic Discharge Caution

This integrated circuit can be damaged by ESD. Texas Instruments recommends that all integrated circuits be handled with appropriate precautions. Failure to observe proper handling and installation procedures can cause damage.

ESD damage can range from subtle performance degradation to complete device failure. Precision integrated circuits may be more susceptible to damage because very small parametric changes could cause the device not to meet its published specifications.

11.7 Glossary

TI Glossary	This glossary lists and explains terms, acronyms, and definitions.

12 Mechanical, Packaging, and Orderable Information

The following pages include mechanical, packaging, and orderable information. This information is the most current data available for the designated devices. This data is subject to change without notice and revision of this document. For browser-based versions of this data sheet, refer to the left-hand navigation.

PACKAGING INFORMATION

Orderable part number	Status (1)	Material type (2)	Package | Pins	Package qty | Carrier	RoHS (3)	Lead finish/ Ball material (4)	MSL rating/ Peak reflow (5)	Op temp (°C)	Part marking (6)
DLP2010NIRAFQJ	Active	Production	CLGA (FQJ) | 40	120 | JEDEC TRAY (5+1)	Yes	Call TI	N/A for Pkg Type	0 to 70	
DLP2010NIRAFQJ.A	Active	Production	CLGA (FQJ) | 40	120 | JEDEC TRAY (5+1)	Yes	Call TI	N/A for Pkg Type	0 to 70	
DLP2010NIRAFQJ.B	Active	Production	CLGA (FQJ) | 40	120 | JEDEC TRAY (5+1)	Yes	Call TI	N/A for Pkg Type	0 to 70	

(1) **Status:** For more details on status, see our product life cycle.

(2) **Material type:** When designated, preproduction parts are prototypes/experimental devices, and are not yet approved or released for full production. Testing and final process, including without limitation quality assurance, reliability performance testing, and/or process qualification, may not yet be complete, and this item is subject to further changes or possible discontinuation. If available for ordering, purchases will be subject to an additional waiver at checkout, and are intended for early internal evaluation purposes only. These items are sold without warranties of any kind.

(3) **RoHS values:** Yes, No, RoHS Exempt. See the TI RoHS Statement for additional information and value definition.

(4) **Lead finish/Ball material:** Parts may have multiple material finish options. Finish options are separated by a vertical ruled line. Lead finish/Ball material values may wrap to two lines if the finish value exceeds the maximum column width.

(5) **MSL rating/Peak reflow:** The moisture sensitivity level ratings and peak solder (reflow) temperatures. In the event that a part has multiple moisture sensitivity ratings, only the lowest level per JEDEC standards is shown. Refer to the shipping label for the actual reflow temperature that will be used to mount the part to the printed circuit board.

(6) **Part marking:** There may be an additional marking, which relates to the logo, the lot trace code information, or the environmental category of the part.

Multiple part markings will be inside parentheses. Only one part marking contained in parentheses and separated by a "~" will appear on a part. If a line is indented then it is a continuation of the previous line and the two combined represent the entire part marking for that device.

Important Information and Disclaimer: The information provided on this page represents TI's knowledge and belief as of the date that it is provided. TI bases its knowledge and belief on information provided by third parties, and makes no representation or warranty as to the accuracy of such information. Efforts are underway to better integrate information from third parties. TI has taken and continues to take reasonable steps to provide representative and accurate information but may not have conducted destructive testing or chemical analysis on incoming materials and chemicals. TI and TI suppliers consider certain information to be proprietary, and thus CAS numbers and other limited information may not be available for release.

In no event shall TI's liability arising out of such information exceed the total purchase price of the TI part(s) at issue in this document sold by TI to Customer on an annual basis.

TRAY

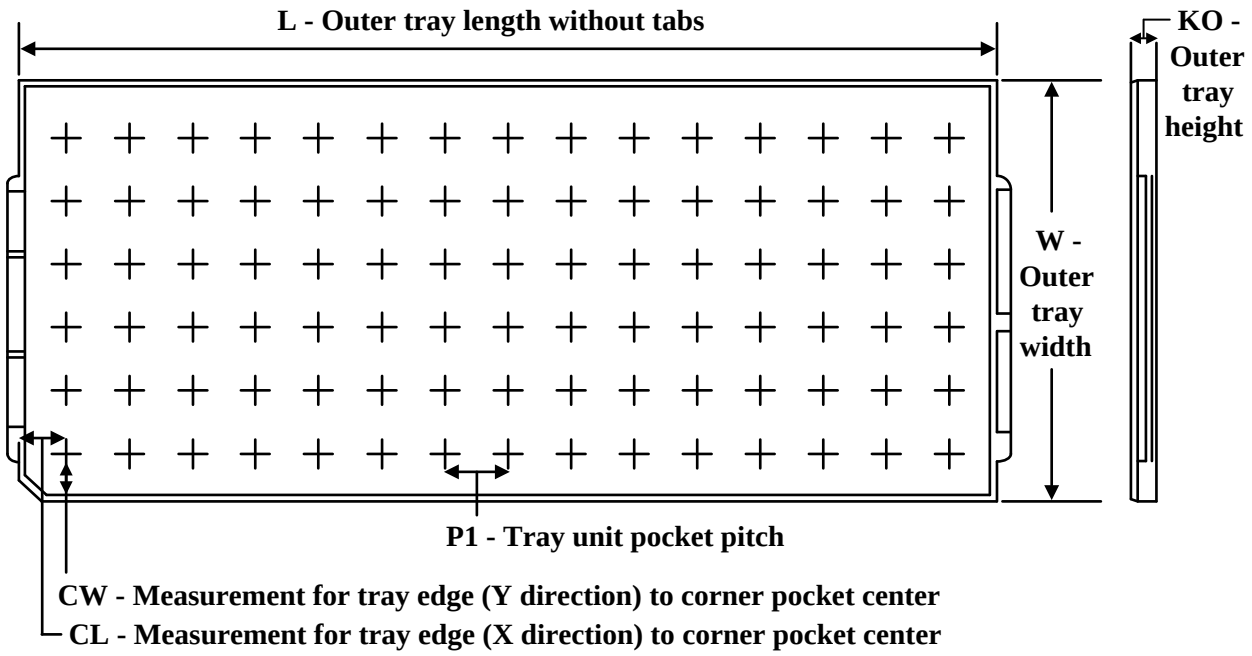

Chamfer on Tray corner indicates Pin 1 orientation of packed units.

*All dimensions are nominal

Device	Package Name	Package Type	Pins	SPQ	Unit array matrix	Max temperature (°C)	L (mm)	W (mm)	K0 (µm)	P1 (mm)	CL (mm)	CW (mm)
DLP2010NIRAFQJ	FQJ	CLGA	40	120	10 x 12	150	315	135.9	12190	23	31	16.2
DLP2010NIRAFQJ.A	FQJ	CLGA	40	120	10 x 12	150	315	135.9	12190	23	31	16.2
DLP2010NIRAFQJ.B	FQJ	CLGA	40	120	10 x 12	150	315	135.9	12190	23	31	16.2

© COPYRIGHT 2012 TEXAS INSTRUMENTS
UN-PUBLISHED, ALL RIGHTS RESERVED.

REVISIONS

REV	DESCRIPTION	DATE	BY
A	ECO 2127544: INITIAL RELEASE	9/14/2012	BMH
B	ECO 2129552: ENLARGE APERTURE ON RIGHT SIDE; MOVE ACTIVE ARRAY Y-LOCATION DIM, SH. 3	12/10/2012	BMH
C	ECO 2131252: ENLARGE APERTURE ALONG BOTTOM EDGE	2/20/2013	BMH
D	ECO 2135244: CORRECT WINDOW THK TOL, ZONE B6	8/5/2013	BMH
E	ECO 2138016: INCREASE WINDOW THK NOMINAL	11/21/2013	BMH
F	ECO 2186532: ADD APERTURE SLOTS PICTORIALLY	3/31/2020	BMH

NOTES UNLESS OTHERWISE SPECIFIED:

1. DIE PARALLELISM TOLERANCE APPLIES TO DMD ACTIVE ARRAY ONLY.
2. ROTATION ANGLE OF DMD ACTIVE ARRAY IS A REFINEMENT OF THE LOCATION TOLERANCE AND HAS A MAXIMUM ALLOWED VALUE OF 0.6 DEGREES.
3. BOUNDARY MIRRORS SURROUNDING THE DMD ACTIVE ARRAY.
4. DMD MARKING TO APPEAR IN CONNECTOR RECESS.
5. NOTCH DIMENSIONS ARE DEFINED BY UPPERMOST LAYERS OF CERAMIC, AS SHOWN IN SECTION A-A.
6. ENCAPSULANT TO BE CONTAINED WITHIN DIMENSIONS SHOWN IN VIEW C (SHEET 2). NO ENCAPSULANT IS ALLOWED ON TOP OF THE WINDOW.
7. ENCAPSULANT NOT TO EXCEED THE HEIGHT OF THE WINDOW.
8. DATUM B IS DEFINED BY A DIA. 2.5 PIN, WITH A FLAT ON THE SIDE FACING TOWARD THE CENTER OF THE ACTIVE ARRAY, AS SHOWN IN VIEW B (SHEET 2).
9. WHILE ONLY THE THREE DATUM A TARGET AREAS A1, A2, AND A3 ARE USED FOR MEASUREMENT, ALL 4 CORNERS SHOULD BE CONTACTED, INCLUDING E1, TO SUPPORT MECHANICAL LOADS.

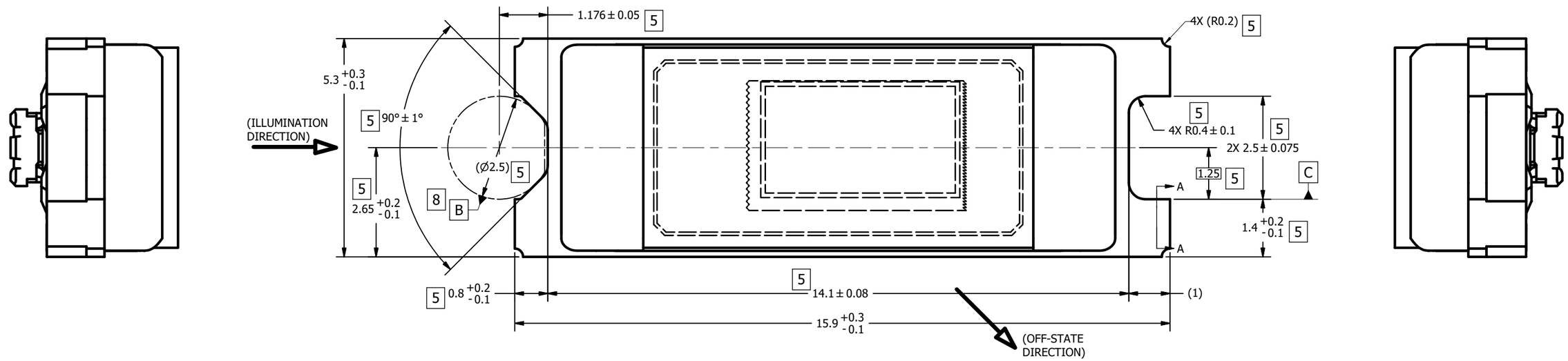

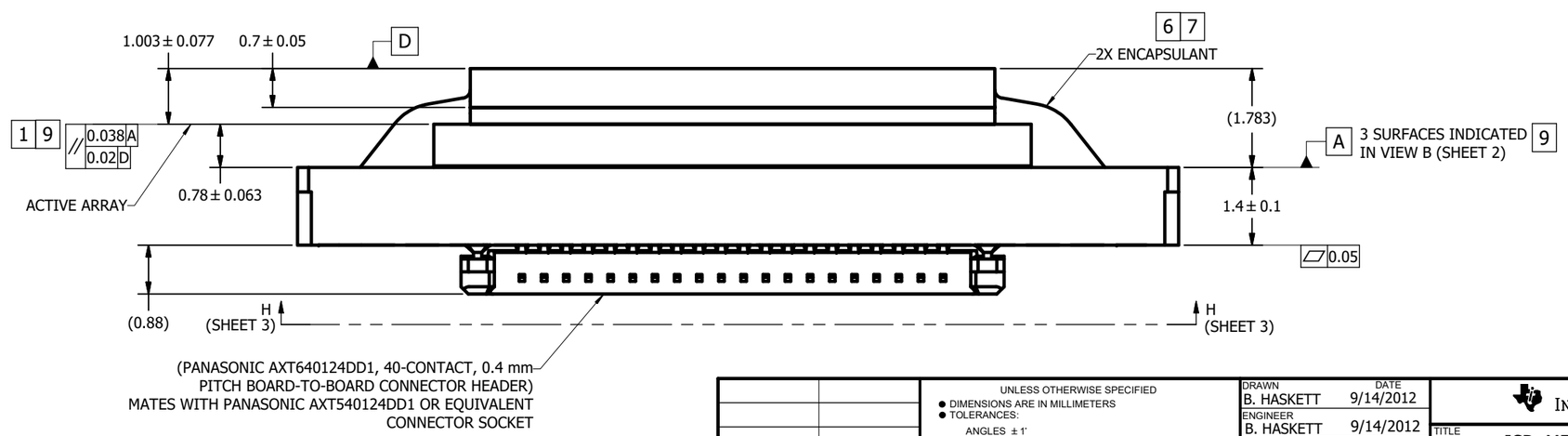

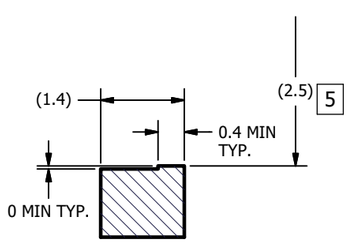

SECTION A-A
NOTCH OFFSETS

NEXT ASSY	USED ON
	0314DA

APPLICATION

THIRD ANGLE PROJECTION

UNLESS OTHERWISE SPECIFIED
- DIMENSIONS ARE IN MILLIMETERS
- TOLERANCES:
  - ANGLES ± 1°
  - 2 PLACE DECIMALS ± 0.25
  - 1 PLACE DECIMALS ± 0.50
- ~~DIMENSIONAL LIMITS APPLY BEFORE PROCESSES~~
- INTERPRET DIMENSIONS IN ACCORDANCE WITH ASME Y14.5M-1994
- ~~REMOVE ALL BURRS AND SHARP EDGES~~
- PARENTHETICAL INFORMATION FOR REFERENCE ONLY

		DATE
DRAWN	B. HASKETT	9/14/2012
ENGINEER	B. HASKETT	9/14/2012
QA/CE	P. KONRAD	9/26/2012
CM	F. ARMSTRONG	9/26/2012
	M. DORAK	9/18/2012
APPROVED	M. SOUCEK	9/18/2012

TEXAS INSTRUMENTS
Dallas Texas

TITLE
ICD, MECHANICAL, DMD, .2 WVGA SERIES 244 (FQJ PACKAGE)

SIZE D | DWG NO 2512515 | REV F

SCALE 20:1 | SHEET 1 OF 3

INV11-2006a

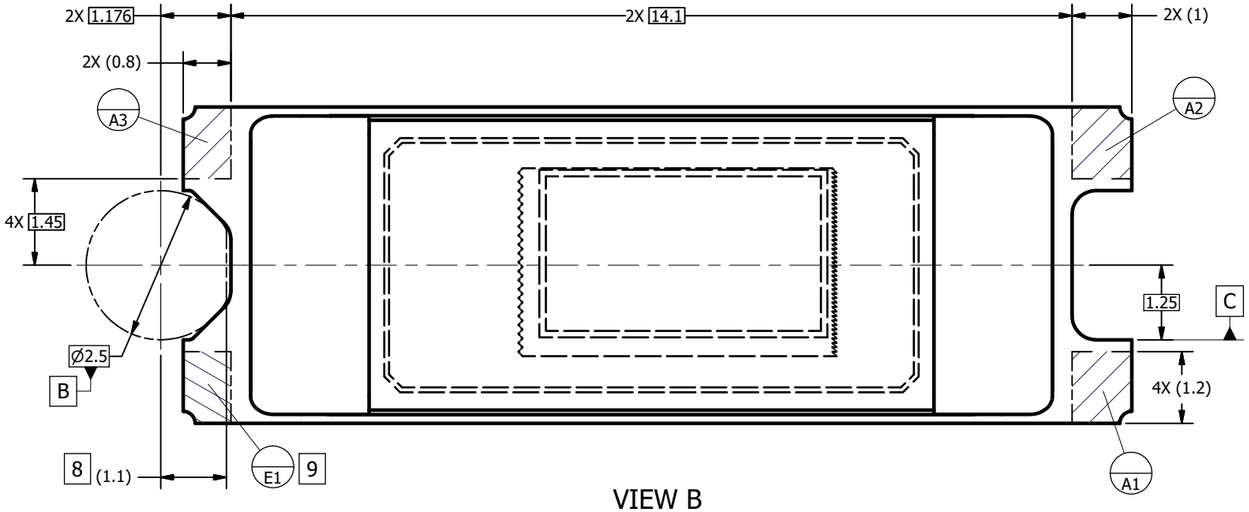

VIEW B
DATUMS A, B, C, AND E
(FROM SHEET 1)

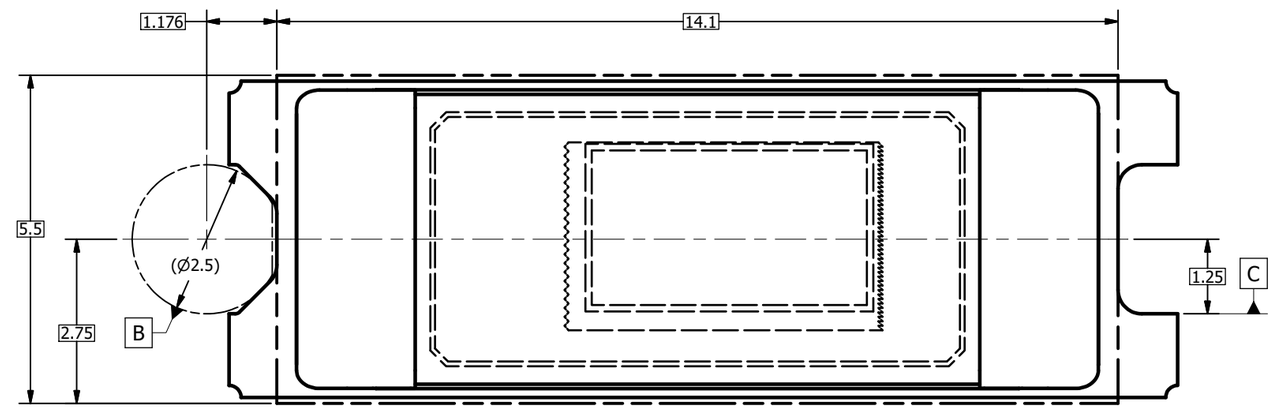

VIEW C 6
ENCAPSULANT MAXIMUM X/Y DIMENSIONS
(FROM SHEET 1)

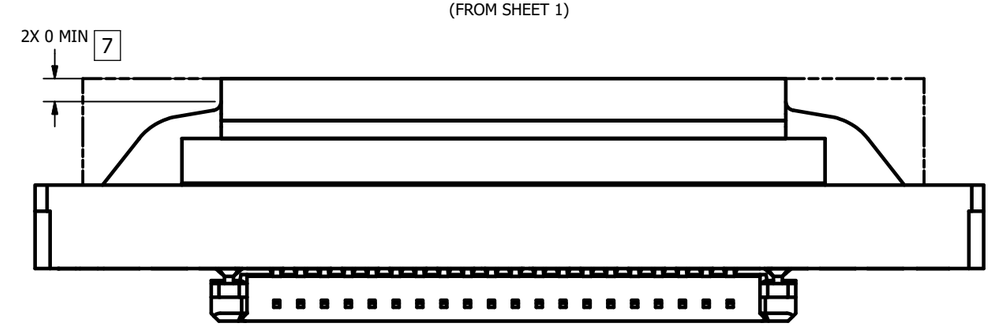

VIEW D
ENCAPSULANT MAXIMUM HEIGHT

TEXAS INSTRUMENTS Dallas Texas	DRAWN B. HASKETT	DATE 9/14/2012	SIZE D	DWG NO 2512515	REV F
			SCALE	SHEET 2 OF 3	

INV11-2006a

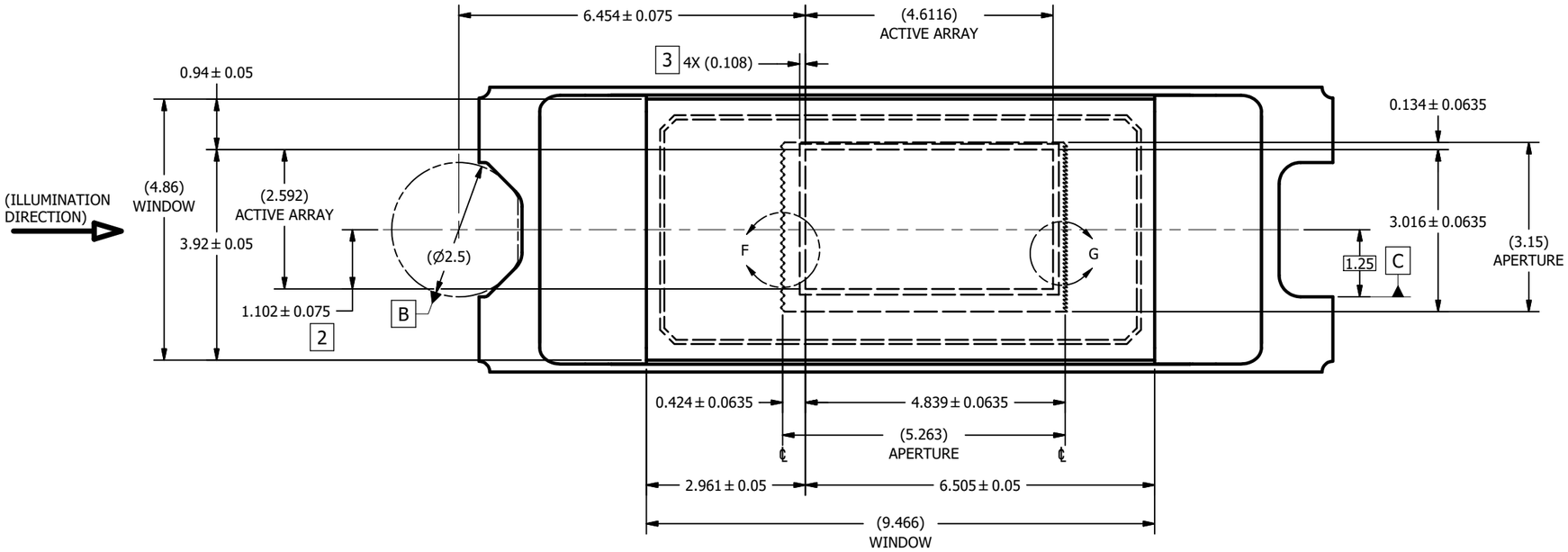

VIEW E
WINDOW AND ACTIVE ARRAY
(FROM SHEET 1)

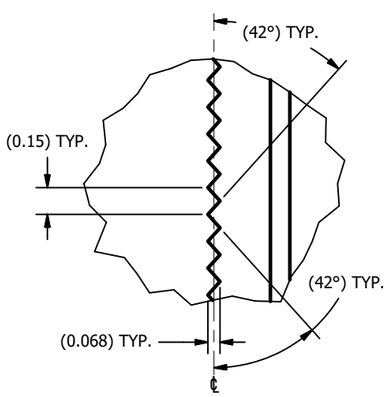

DETAIL F
APERTURE LEFT EDGE
SCALE 60 : 1

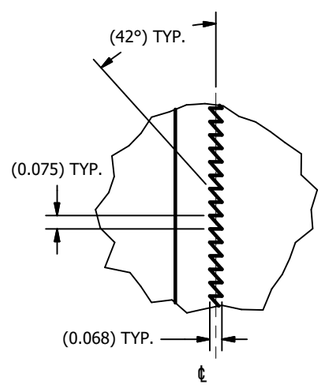

DETAIL G
APERTURE RIGHT EDGE
(POND OF MIRRORS OMITTED FOR CLARITY)
SCALE 60 : 1

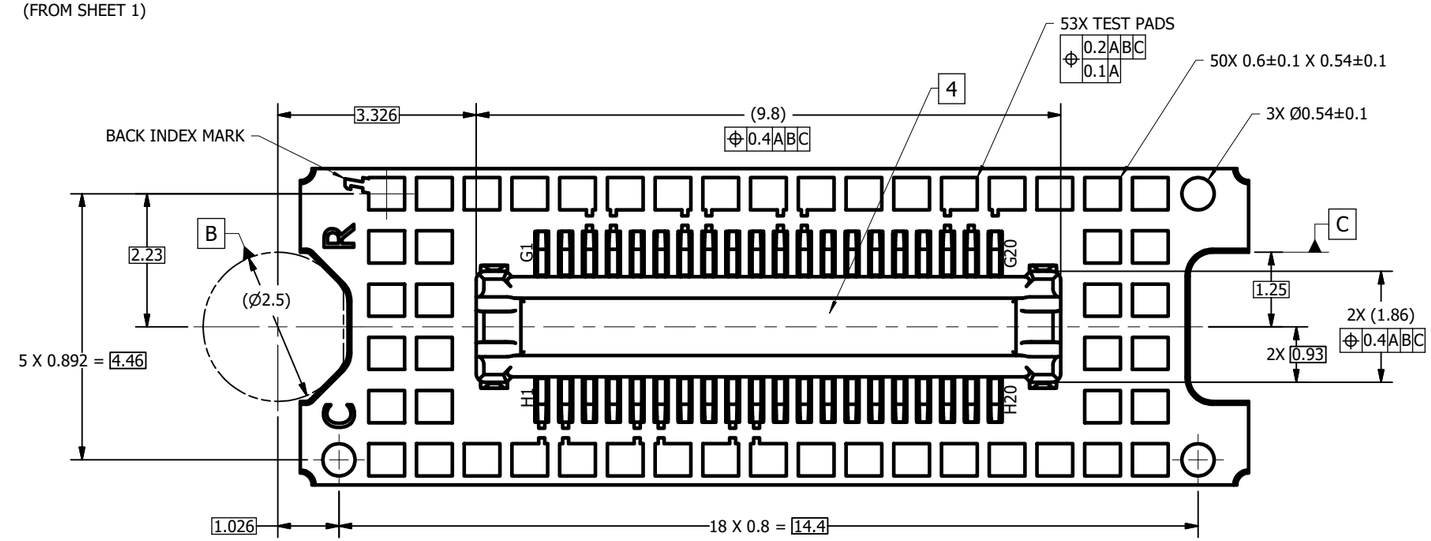

VIEW H-H
TEST PADS AND CONNECTOR
(FROM SHEET 1)

TEXAS INSTRUMENTS Dallas Texas	DRAWN B. HASKETT	DATE 9/14/2012	SIZE D	DWG NO 2512515	REV F
			SCALE	SHEET 3 OF 3	

INV11-2006a

IMPORTANT NOTICE AND DISCLAIMER

TI PROVIDES TECHNICAL AND RELIABILITY DATA (INCLUDING DATASHEETS), DESIGN RESOURCES (INCLUDING REFERENCE DESIGNS), APPLICATION OR OTHER DESIGN ADVICE, WEB TOOLS, SAFETY INFORMATION, AND OTHER RESOURCES “AS IS” AND WITH ALL FAULTS, AND DISCLAIMS ALL WARRANTIES, EXPRESS AND IMPLIED, INCLUDING WITHOUT LIMITATION ANY IMPLIED WARRANTIES OF MERCHANTABILITY, FITNESS FOR A PARTICULAR PURPOSE OR NON-INFRINGEMENT OF THIRD PARTY INTELLECTUAL PROPERTY RIGHTS.

These resources are intended for skilled developers designing with TI products. You are solely responsible for (1) selecting the appropriate TI products for your application, (2) designing, validating and testing your application, and (3) ensuring your application meets applicable standards, and any other safety, security, regulatory or other requirements.

These resources are subject to change without notice. TI grants you permission to use these resources only for development of an application that uses the TI products described in the resource. Other reproduction and display of these resources is prohibited. No license is granted to any other TI intellectual property right or to any third party intellectual property right. TI disclaims responsibility for, and you fully indemnify TI and its representatives against any claims, damages, costs, losses, and liabilities arising out of your use of these resources.

TI’s products are provided subject to TI’s Terms of Sale, TI’s General Quality Guidelines, or other applicable terms available either on ti.com or provided in conjunction with such TI products. TI’s provision of these resources does not expand or otherwise alter TI’s applicable warranties or warranty disclaimers for TI products. Unless TI explicitly designates a product as custom or customer-specified, TI products are standard, catalog, general purpose devices.

TI objects to and rejects any additional or different terms you may propose.

Copyright © 2026, Texas Instruments Incorporated

Last updated 10/2025