# DLP470NE 0.47-Inch 1080P Digital Micromirror Device

## 1 Features

- 0.47-inch diagonal micromirror array
  - Full HD/1080P (1920 × 1080)
  - 5.4-micron micromirror pitch
  - ±17° micromirror tilt (relative to the flat surface)
  - Bottom illumination
- 2xLVDS input data bus
- The DLP470NE chipset includes:
  - DLP470NE DMD
  - DLPC4420 controller
  - DLPA100 controller power management and motor driver IC

## 2 Applications

- Full HD (1080P) display
- Laser TV
- Mobile smart TV
- Digital signage
- Gaming
- Home cinema

## 3 Description

The TI DLP® DLP470NE digital micromirror device (DMD) is a digitally controlled micro-electromechanical system (MEMS) spatial light modulator (SLM) that enables bright full HD display systems. The DLP470NE DMD—together with the DLPC4420 display controller and the DLPA100 controller power and motor driver—provides the capability to achieve high performance systems and is a great fit for display applications that require high resolution and 16:9 aspect ratio, high brightness, and system simplicity in a smaller package. The DLP470NE DMD can also use the DLPC4430 as a display controller.

The DMD ecosystem includes established resources to help the user accelerate the design cycle, visit the DLP® Products third-party search tools to find approved optical module manufacturers and third party providers.

Visit Getting Started With TI DLP Display Technology to learn more about how to start designing with the DMD.

**Device Information**

| PART NUMBER | PACKAGE(1) | PACKAGE SIZE |
|---|---|---|
| DLP470NE | FXH (257) | 33.2mm × 22.3mm |

(1) For more information, see the orderable addendum at the end of the data sheet.

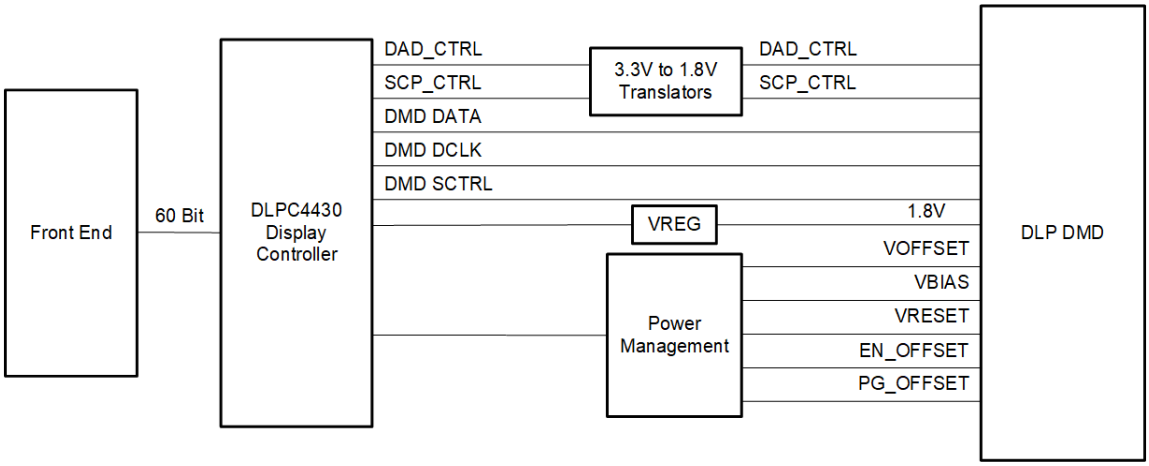


**DLP470NE Simplified Application**

An IMPORTANT NOTICE at the end of this data sheet addresses availability, warranty, changes, use in safety-critical applications, intellectual property matters and other important disclaimers. PRODUCTION DATA.

# Table of Contents

**1 Features**....1
**2 Applications**....1
**3 Description**....1
**4 Pin Configuration and Functions**....3
**5 Specifications**....10
5.1 Absolute Maximum Ratings....10
5.2 Storage Conditions....10
5.3 ESD Ratings....11
5.4 Recommended Operating Conditions....11
5.5 Thermal Information....13
5.6 Electrical Characteristics....14
5.7 Capacitance at Recommended Operating Conditions....14
5.8 Timing Requirements....15
5.9 System Mounting Interface Loads....18
5.10 Micromirror Array Physical Characteristics....19
5.11 Micromirror Array Optical Characteristics....21
5.12 Window Characteristics....23
5.13 Chipset Component Usage Specification....23
**6 Detailed Description**....23
6.1 Overview....23
6.2 Functional Block Diagram....24
6.3 Feature Description....25
6.4 Device Functional Modes....25
6.5 Optical Interface and System Image Quality Considerations....25
6.6 Micromirror Array Temperature Calculation....26
6.7 Micromirror Power Density Calculation....27
6.8 Micromirror Landed-On/Landed-Off Duty Cycle....28
**7 Application and Implementation**....32
7.1 Application Information....32
7.2 Typical Application....32
7.3 DMD Die Temperature Sensing....34
**8 Power Supply Recommendations**....36
8.1 DMD Power Supply Power-Up Procedure....36
8.2 DMD Power Supply Power-Down Procedure....36
**9 Layout**....39
9.1 Layout Guidelines....39
9.2 Layout Example....39
**10 Device and Documentation Support**....41
10.1 Third-Party Products Disclaimer....41
10.2 Device Support....41
10.3 Documentation Support....41
10.4 Receiving Notification of Documentation Updates....42
10.5 Support Resources....42
10.6 Trademarks....42
10.7 Electrostatic Discharge Caution....42
10.8 Glossary....42
**11 Revision History**....42


Copyright © 2024 Texas Instruments Incorporated

# 4 Pin Configuration and Functions

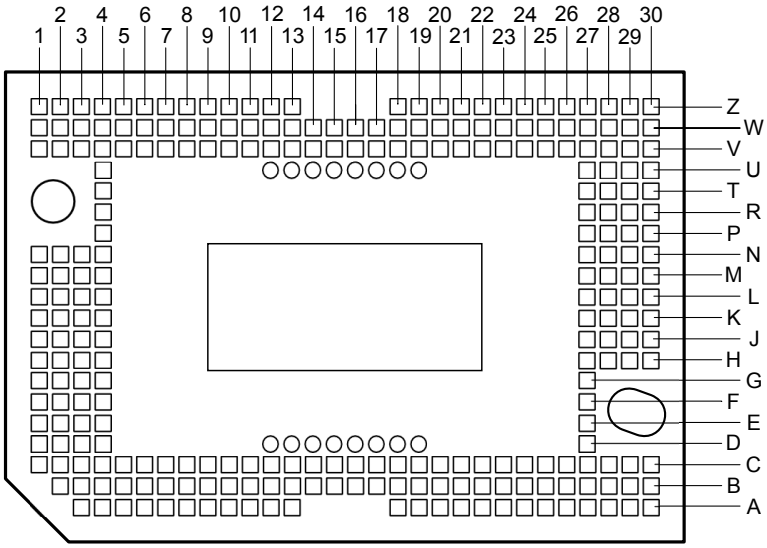


**Figure 4-1. Series 410 257-pin FXH Bottom View**

**CAUTION**

To ensure reliable, long-term operation of the .47-inch 1080P s410 DMD, it is critical to properly manage the layout and operation of the signals identified in the table below. For specific details and guidelines, refer to the *PCB Design Requirements for TI DLP Standard TRP Digital Micromirror Devices* application report before designing the board.

**Table 4-1. Pin Functions**

| PIN | | I/O[3] | SIGNAL | DATA RATE | INTERNAL TERMINATION | DESCRIPTION | TRACE LENGTH (mil) |
|---|---|---|---|---|---|---|---|
| NAME | NO. | | | | | | |
| D_AN(0) | C6 | NC | LVDS | DDR | Differential | No connect | 805.0 |
| D_AN(1) | C3 | | | | | | |
| D_AN(2) | E1 | | | | | | |
| D_AN(3) | C4 | | | | | | |
| D_AN(4) | D1 | | | | | | |
| D_AN(5) | B8 | | | | | | |
| D_AN(6) | F4 | | | | | | |
| D_AN(7) | E3 | | | | | | |
| D_AN(8) | C11 | | | | | | |
| D_AN(9) | F3 | | | | | | |
| D_AN(10) | K4 | | | | | | |
| D_AN(11) | H3 | | | | | | |
| D_AN(12) | J3 | | | | | | |
| D_AN(13) | C13 | | | | | | |
| D_AN(14) | A5 | | | | | | |
| D_AN(15) | A3 | | | | | | |

Copyright © 2024 Texas Instruments Incorporated

**Table 4-1. Pin Functions (continued)**

| PIN | | I/O[3] | SIGNAL | DATA RATE | INTERNAL TERMINATION | DESCRIPTION | TRACE LENGTH (mil) |
|---|---|---|---|---|---|---|---|
| NAME | NO. | | | | | | |
| D_AP(0) | C7 | NC | LVDS | DDR | Differential | No connect | 805.0 |
| D_AP(1) | C2 | | | | | | |
| D_AP(2) | E2 | | | | | | |
| D_AP(3) | B4 | | | | | | |
| D_AP(4) | C1 | | | | | | |
| D_AP(5) | B7 | | | | | | |
| D_AP(6) | E4 | | | | | | |
| D_AP(7) | D3 | | | | | | |
| D_AP(8) | C12 | | | | | | |
| D_AP(9) | F2 | | | | | | |
| D_AP(10) | J4 | | | | | | |
| D_AP(11) | G3 | | | | | | |
| D_AP(12) | J2 | | | | | | |
| D_AP(13) | C14 | | | | | | |
| D_AP(14) | A6 | | | | | | |
| D_AP(15) | A4 | | | | | | |
| D_BN(0) | N4 | NC | LVDS | DDR | Differential | No connect | 805.0 |
| D_BN(1) | Z11 | | | | | | |
| D_BN(2) | W4 | | | | | | |
| D_BN(3) | W10 | | | | | | |
| D_BN(4) | L1 | | | | | | |
| D_BN(5) | V8 | | | | | | |
| D_BN(6) | W6 | | | | | | |
| D_BN(7) | M1 | | | | | | |
| D_BN(8) | R4 | | | | | | |
| D_BN(9) | W1 | | | | | | |
| D_BN(10) | U4 | | | | | | |
| D_BN(11) | V2 | | | | | | |
| D_BN(12) | Z5 | | | | | | |
| D_BN(13) | N3 | | | | | | |
| D_BN(14) | Z2 | | | | | | |
| D_BN(15) | L4 | | | | | | |


Copyright © 2024 Texas Instruments Incorporated

**Table 4-1. Pin Functions (continued)**

| PIN | | I/O[3] | SIGNAL | DATA RATE | INTERNAL TERMINATION | DESCRIPTION | TRACE LENGTH (mil) |
|---|---|---|---|---|---|---|---|
| NAME | NO. | | | | | | |
| D_BP(0) | M4 | NC | LVDS | DDR | Differential | No connect | 805.0 |
| D_BP(1) | Z12 | | | | | | |
| D_BP(2) | Z4 | | | | | | |
| D_BP(3) | Z10 | | | | | | |
| D_BP(4) | L2 | | | | | | |
| D_BP(5) | V9 | | | | | | |
| D_BP(6) | W7 | | | | | | |
| D_BP(7) | N1 | | | | | | |
| D_BP(8) | P4 | | | | | | |
| D_BP(9) | V1 | | | | | | |
| D_BP(10) | T4 | | | | | | |
| D_BP(11) | V3 | | | | | | |
| D_BP(12) | Z6 | | | | | | |
| D_BP(13) | N2 | | | | | | |
| D_BP(14) | Z3 | | | | | | |
| D_BP(15) | L3 | | | | | | |
| D_CN(0) | H27 | I | LVDS | DDR | Differential | Data negative | 805.0 |
| D_CN(1) | A20 | | | | | | |
| D_CN(2) | H28 | | | | | | |
| D_CN(3) | K28 | | | | | | |
| D_CN(4) | K30 | | | | | | |
| D_CN(5) | C23 | | | | | | |
| D_CN(6) | G27 | | | | | | |
| D_CN(7) | J30 | | | | | | |
| D_CN(8) | B24 | | | | | | |
| D_CN(9) | A21 | | | | | | |
| D_CN(10) | A27 | | | | | | |
| D_CN(11) | C29 | | | | | | |
| D_CN(12) | A26 | | | | | | |
| D_CN(13) | C25 | | | | | | |
| D_CN(14) | A29 | | | | | | |
| D_CN(15) | C30 | | | | | | |

Copyright © 2024 Texas Instruments Incorporated

**Table 4-1. Pin Functions (continued)**

| PIN | | I/O[3] | SIGNAL | DATA RATE | INTERNAL TERMINATION | DESCRIPTION | TRACE LENGTH (mil) |
|---|---|---|---|---|---|---|---|
| NAME | NO. | | | | | | |
| D_CP(0) | J27 | I | LVDS | DDR | Differential | Data positive | 805.0 |
| D_CP(1) | A19 | | | | | | |
| D_CP(2) | H29 | | | | | | |
| D_CP(3) | K27 | | | | | | |
| D_CP(4) | K29 | | | | | | |
| D_CP(5) | C22 | | | | | | |
| D_CP(6) | F27 | | | | | | |
| D_CP(7) | H30 | | | | | | |
| D_CP(8) | B25 | | | | | | |
| D_CP(9) | B21 | | | | | | |
| D_CP(10) | B27 | | | | | | |
| D_CP(11) | C28 | | | | | | |
| D_CP(12) | A25 | | | | | | |
| D_CP(13) | C24 | | | | | | |
| D_CP(14) | A28 | | | | | | |
| D_CP(15) | B30 | | | | | | |
| D_DN(0) | V25 | I | LVDS | DDR | Differential | Data negative | 805.0 |
| D_DN(1) | V28 | | | | | | |
| D_DN(2) | T30 | | | | | | |
| D_DN(3) | V27 | | | | | | |
| D_DN(4) | U30 | | | | | | |
| D_DN(5) | W23 | | | | | | |
| D_DN(6) | R27 | | | | | | |
| D_DN(7) | T28 | | | | | | |
| D_DN(8) | V20 | | | | | | |
| D_DN(9) | R28 | | | | | | |
| D_DN(10) | L27 | | | | | | |
| D_DN(11) | N28 | | | | | | |
| D_DN(12) | M28 | | | | | | |
| D_DN(13) | V18 | | | | | | |
| D_DN(14) | Z26 | | | | | | |
| D_DN(15) | Z28 | | | | | | |


Copyright © 2024 Texas Instruments Incorporated

**Table 4-1. Pin Functions (continued)**

| PIN | | I/O[3] | SIGNAL | DATA RATE | INTERNAL TERMINATION | DESCRIPTION | TRACE LENGTH (mil) |
|---|---|---|---|---|---|---|---|
| NAME | NO. | | | | | | |
| D_DP(0) | V24 | I | LVDS | DDR | Differential | Data positive | 805.0 |
| D_DP(1) | V29 | | | | | | |
| D_DP(2) | T29 | | | | | | |
| D_DP(3) | W27 | | | | | | |
| D_DP(4) | V30 | | | | | | |
| D_DP(5) | W24 | | | | | | |
| D_DP(6) | T27 | | | | | | |
| D_DP(7) | U28 | | | | | | |
| D_DP(8) | V19 | | | | | | |
| D_DP(9) | R29 | | | | | | |
| D_DP(10) | M27 | | | | | | |
| D_DP(11) | P28 | | | | | | |
| D_DP(12) | M29 | | | | | | |
| D_DP(13) | V17 | | | | | | |
| D_DP(14) | Z25 | | | | | | |
| D_DP(15) | Z27 | | | | | | |
| SCTRL_AN | G1 | NC | LVDS | DDR | Differential | No connect | 805.0 |
| SCTRL_AP | F1 | | | | | | |
| SCTRL_BN | V5 | | | | | | |
| SCTRL_BP | V4 | | | | | | |
| SCTRL_CN | C26 | I | LVDS | DDR | Differential | Serial control negative | 805.0 |
| SCTRL_CP | C27 | I | LVDS | DDR | Differential | Serial control positive | 805.0 |
| SCTRL_DN | P30 | I | LVDS | DDR | Differential | Serial control negative | 805.0 |
| SCTRL_DP | R30 | I | LVDS | DDR | Differential | Serial control positive | 805.0 |
| DCLK_AN | H2 | NC | LVDS | | Differential | No connect | 805.0 |
| DCLK_AP | H1 | | | | | | |
| DCLK_BN | V6 | | | | | | |
| DCLK_BP | V7 | | | | | | |
| DCLK_CN | D27 | I | LVDS | | Differential | Clock negative | 805.0 |
| DCLK_CP | E27 | I | LVDS | | Differential | Clock positive | 805.0 |
| DCLK_DN | N29 | I | LVDS | | Differential | Clock negative | 805.0 |
| DCLK_DP | N30 | I | LVDS | | Differential | Clock positive | 805.0 |
| SCPCLK | A10 | I | LVCMOS | | Pull down | Serial communications port clock. Active only when SCPENZ is logic low | |
| SCPDI | A12 | I | LVCMOS | SDR | Pull down | Serial communications port data input. Synchronous to SCPCLK rising edge | |
| SCPENZ | C10 | I | LVCMOS | | Pull down | Serial communications port enable active low | |
| SCPDO | A11 | O | LVCMOS | SDR | | Serial communications port output | |
| RESET_ADDR(0) | Z13 | I | LVCMOS | | Pull down | Reset driver address select | |
| RESET_ADDR(1) | W13 | | | | | | |
| RESET_ADDR(2) | V10 | | | | | | |
| RESET_ADDR(3) | W14 | | | | | | |

Copyright © 2024 Texas Instruments Incorporated

**Table 4-1. Pin Functions (continued)**

| PIN | | I/O[3] | SIGNAL | DATA RATE | INTERNAL TERMINATION | DESCRIPTION | TRACE LENGTH (mil) |
|---|---|---|---|---|---|---|---|
| NAME | NO. | | | | | | |
| RESET_MODE(0) | W9 | I | LVCMOS | | Pull down | Reset driver mode select | |
| RESET_SEL(0) | V14 | | | | | Reset driver level select | |
| RESET_SEL(1) | Z8 | | | | | Reset driver level select | |
| RESET_STROBE | Z9 | I | LVCMOS | | Pull down | Rising edge latches in RESET_ADDR, RESET_MODE, and RESET_SEL | |
| PWRDNZ | A8 | I | LVCMOS | | Pull down | Active low device reset | |
| RESET_OEZ | W15 | I | LVCMOS | | Pull up | Active low output enable for internal reset driver circuits | |
| RESET_IRQZ | V16 | O | LVCMOS | | | Active low output interrupt to DLP display controller | |
| EN_OFFSET | C9 | O | LVCMOS | | | Active high enable for external VOFFSET regulator | |
| PG_OFFSET | A9 | I | LVCMOS | | Pull up | Active low fault from external VOFFSET regulator | |
| TEMP_N | B18 | | Analog | | | Temperature sensor diode cathode | |
| TEMP_P | B17 | | Analog | | | Temperature sensor diode anode | |
| RESERVED | D12, D13, D14, D15, D16, D17, D18, D19, U12, U13, U14, U15 | NC | Analog | | Pull Down | Do not connect on DLP system board. No connect. No electrical connections from CMOS bond pad to package pin | |
| No Connect | U16, U17, U18, U19 | NC | | | | No connect. No electrical connection from CMOS bond pad to package pin | |
| RESERVED_BA | W11 | O | LVCMOS | | | Do not connect on DLP system board. | |
| RESERVED_BB | B11 | | | | | | |
| RESERVED_BC | Z20 | | | | | | |
| RESERVED_BD | C18 | | | | | | |
| RESERVED_PFE | A18 | I | LVCMOS | | Pull down | Connect to ground on DLP system board. | |
| RESERVED_TM | C8 | | | | | | |
| RESERVED_TP0 | Z19 | I | Analog | | | Do not connect on DLP system board. | |
| RESERVED_TP1 | W20 | | | | | | |
| RESERVED_TP2 | W19 | | | | | | |
| VBIAS[1] | C15, C16, V11, V12 | P | Analog | | | Supply voltage for positive bias level of micromirror reset signal | |
| VRESET[1] | G4, H4, J1, K1 | P | Analog | | | Supply voltage for negative reset level of micromirror reset signal | |
| VOFFSET[1] | A30, B2, M30, Z1, Z30 | P | Analog | | | Supply voltage for HVCMOS logic. Supply voltage for positive offset level of micromirror reset signal. Supply voltage for stepped high voltage at micromirror address electrodes | |


Copyright © 2024 Texas Instruments Incorporated

**Table 4-1. Pin Functions (continued)**

| PIN | | I/O[3] | SIGNAL | DATA RATE | INTERNAL TERMINATION | DESCRIPTION | TRACE LENGTH (mil) |
|---|---|---|---|---|---|---|---|
| NAME | NO. | | | | | | |
| VCC[1] | A24, A7, B10, B13, B16, B19, B22, B28, B5, C17, C20, D4, J29, K2, L29, M2, N27, U27, V13, V15, V22, W17, W21, W26, W29, W3, Z18, Z23, Z29, Z7 | P | Analog | | | Supply voltage for LVCMOS core. Supply voltage for positive offset level of micromirror reset signal during Power down. Supply voltage for normal high level at micromirror address electrodes | |
| VSS[2] | A13, A22, A23, B12, B14, B15, B20, B23, B26, B29, B3, B6, B9, C19, C21, C5, D2, G2, J28, K3, L28, L30, M3, P27, P29, U29, V21, V23, V26, W12, W16, W18, W2, W22, W25, W28, W30, W5, W8, Z21, Z22, Z24 | G | | | | Device ground. Common return for all power | |

(1) $V_{BIAS}$, $V_{CC}$, $V_{OFFSET}$, and $V_{RESET}$ power supplies must be connected for proper DMD operation.
(2) $V_{SS}$ must be connected for proper DMD operation.
(3) I = Input, O = Output, P = Power, G = Ground, NC = No connect

# 5 Specifications

## 5.1 Absolute Maximum Ratings

| | | MIN | MAX | UNIT |
|---|---|---|---|---|
| **SUPPLY VOLTAGES** | | | | |
| $V_{CC}$ | Supply voltage for LVCMOS core logic[(1)] | –0.5 | 2.3 | V |
| $V_{OFFSET}$ | Supply voltage for HVCMOS and micromirror electrode[(1) (2)] | –0.5 | 11 | V |
| $V_{BIAS}$ | Supply voltage for micromirror electrode[(1)] | –0.5 | 19 | V |
| $V_{RESET}$ | Supply voltage for micromirror electrode[(1)] | –15 | –0.3 | V |
| $\|V_{BIAS} – V_{OFFSET}\|$ | Supply voltage difference (absolute value)[(3)] | | 11 | V |
| $\|V_{BIAS} – V_{RESET}\|$ | Supply voltage difference (absolute value)[(4)] | | 34 | V |
| **INPUT VOLTAGES** | | | | |
| | Input voltage for all other LVCMOS input pins[(1)] | –0.5 | $V_{CC}$ + 0.5 | V |
| $\|V_{ID}\|$ | Input differential voltage (absolute value)[(5)] | | 500 | mV |
| $I_{ID}$ | Input differential current[(6)] | | 6.3 | mA |
| **Clocks** | | | | |
| $f_{CLOCK}$ | Clock frequency for LVDS interface, DCLK_C | | 400 | MHz |
| $f_{CLOCK}$ | Clock frequency for LVDS interface, DCLK_D | | 400 | MHz |
| **ENVIRONMENTAL** | | | | |
| $T_{ARRAY}$ and $T_{WINDOW}$ | Temperature, operating[(7)] | 0 | 90 | °C |
| | Temperature, non–operating[(7)] | –40 | 90 | °C |
| $\|T_{DELTA}\|$ | Absolute temperature delta between any point on the window edge and the ceramic test point TP1 [(8)] | | 30 | °C |
| $T_{DP}$ | Dew point temperature, operating and non–operating (noncondensing) | | 81 | °C |

(1) All voltages are referenced to common ground $V_{SS}$. $V_{BIAS}$, $V_{CC}$, $V_{OFFSET}$, and $V_{RESET}$ power supplies are all required for proper DMD operation. $V_{SS}$ must also be connected.
(2) $V_{OFFSET}$ supply transients must fall within specified voltages.
(3) Exceeding the recommended allowable voltage difference between $V_{BIAS}$ and $V_{OFFSET}$ may result in excessive current draw.
(4) Exceeding the recommended allowable voltage difference between $V_{BIAS}$ and $V_{RESET}$ may result in excessive current draw.
(5) This maximum LVDS input voltage rating applies when each input of a differential pair is at the same voltage potential.
(6) LVDS differential inputs must not exceed the specified limit or damage may result to the internal termination resistors.
(7) The highest temperature of the active array (as calculated using Micromirror Array Temperature Calculation) or of any point along the window edge as defined in Figure 6-2. The locations of thermal test points TP2, TP3, TP4 and TP5 in Figure 6-2 are intended to measure the highest window edge temperature. If a particular application causes another point on the window edge to be at a higher temperature, use that point.
(8) Temperature delta is the highest difference between the ceramic test point 1 (TP1) and anywhere on the window edge as shown in Figure 6-2. The window test points TP2, TP3, TP4, and TP5 shown in Figure 6-2 are intended to result in the worst case delta. If a particular application causes another point on the window edge to result in a larger delta temperature, use that point.

## 5.2 Storage Conditions

Applicable for the DMD as a component or non-operating in a system.

| | | MIN | MAX | UNIT |
|---|---|---|---|---|
| $T_{DMD}$ | DMD storage temperature | –40 | 80 | °C |
| $T_{DP-AVG}$ | Average dew point temperature, (non-condensing) [(1)] | | 28 | °C |
| $T_{DP-ELR}$ | Elevated dew point temperature range , (non-condensing) [(2)] | 28 | 36 | °C |
| $CT_{ELR}$ | Cumulative time in elevated dew point temperature range | | 24 | Months |

(1) The average over time (including storage and operating) that the device is not in the elevated dew point temperature range.
(2) Limit the exposure to dew point temperatures in the elevated range during storage and operation to less than a total cumulative time of $CT_{ELR}$.


Copyright © 2024 Texas Instruments Incorporated

## 5.3 ESD Ratings

| | | | VALUE | UNIT |
|---|---|---|---|---|
| $V_{(ESD)}$ | Electrostatic discharge | Human-body model (HBM), per ANSI/ESDA/JEDEC JS-001[1] | ±2000 | V |
| | | Charged device model (CDM), per JEDEC specification JESD22-C101[2] | ±500 | |

(1) JEDEC document JEP155 states that 500V HBM allows safe manufacturing with a standard ESD control process.
(2) JEDEC document JEP157 states that 250V CDM allows safe manufacturing with a standard ESD control process.

## 5.4 Recommended Operating Conditions

Over operating free-air temperature range (unless otherwise noted). The functional performance of the device specified in this data sheet is achieved when operating the device within the limits defined by this table. No level of performance is implied when operating the device above or below these limits.

| | | MIN | NOM | MAX | UNIT |
|---|---|---|---|---|---|
| **VOLTAGE SUPPLY** | | | | | |
| $V_{CC}$ | LVCMOS logic supply voltage[1] | 1.65 | 1.8 | 1.95 | V |
| $V_{OFFSET}$ | Mirror electrode and HVCMOS voltage[1] [2] | 9.5 | 10 | 10.5 | V |
| $V_{BIAS}$ | Mirror electrode voltage[1] | 17.5 | 18 | 18.5 | V |
| $V_{RESET}$ | Mirror electrode voltage[1] | –14.5 | –14 | –13.5 | V |
| $\lvert V_{BIAS} – V_{OFFSET}\rvert$ | Supply voltage difference (absolute value)[3] | | | 10.5 | V |
| $\lvert V_{BIAS} – V_{RESET}\rvert$ | Supply voltage difference (absolute value)[4] | | | 33 | V |
| **LVCMOS INTERFACE** | | | | | |
| $V_{IH(DC)}$ | DC input high voltage[5] | 0.7 × $V_{CC}$ | | $V_{CC}$ + 0.3 | V |
| $V_{IL(DC)}$ | DC input low voltage[5] | –0.3 | | 0.3 × $V_{CC}$ | V |
| $V_{IH(AC)}$ | AC input high voltage[5] | 0.8 × $V_{CC}$ | | $V_{CC}$ + 0.3 | V |
| $V_{IL(AC)}$ | AC input low voltage[5] | –0.3 | | 0.2 × $V_{CC}$ | V |
| $t_{PWRDNZ}$ | PWRDNZ pulse duration[6] | 10 | | | ns |
| **SCP INTERFACE** | | | | | |
| $f_{SCPCLK}$ | SCP clock frequency[7] | | | 500 | kHz |
| $t_{SCP_PD}$ | Propagation delay, Clock to Q, from rising–edge of SCPCLK to valid SCPDO[8] | 0 | | 900 | ns |
| $t_{SCP_NEG_ENZ}$ | Time between falling-edge of SCPENZ and the first rising- edge of SCPCLK | 1 | | | µs |
| $t_{SCP_POS_ENZ}$ | Time between falling-edge of SCPCLK and the rising-edge of SCPENZ | 1 | | | µs |
| $t_{SCP_DS}$ | SCPDI Clock setup time (before SCPCLK falling edge)[8] | 800 | | | ns |
| $t_{SCP_DH}$ | SCPDI Hold time (after SCPCLK falling edge)[8] | 900 | | | ns |
| $t_{SCP_PW_ENZ}$ | SCPENZ inactive pulse duration (high level) | 2 | | | µs |

Copyright © 2024 Texas Instruments Incorporated

## 5.4 Recommended Operating Conditions (continued)

Over operating free-air temperature range (unless otherwise noted). The functional performance of the device specified in this data sheet is achieved when operating the device within the limits defined by this table. No level of performance is implied when operating the device above or below these limits.

| | | MIN | NOM | MAX | UNIT |
|---|---|---|---|---|---|
| **LVDS INTERFACE** | | | | | |
| $f_{CLOCK}$ | Clock frequency for LVDS interface (all channels), DCLK[9] | | | 400 | MHz |
| $\|V_{ID}\|$ | Input differential voltage (absolute value)[10] | 150 | 300 | 440 | mV |
| $V_{CM}$ | Common mode voltage[10] | 1100 | 1200 | 1300 | mV |
| $V_{LVDS}$ | LVDS voltage[10] | 880 | | 1520 | mV |
| $t_{LVDS_RSTZ}$ | Time required for LVDS receivers to recover from PWRDNZ | | | 2000 | ns |
| $Z_{IN}$ | Internal differential termination resistance | 80 | 100 | 120 | Ω |
| $Z_{LINE}$ | Line differential impedance (PWB/trace) | 90 | 100 | 110 | Ω |
| **ENVIRONMENTAL** | | | | | |
| $T_{ARRAY}$ | Array temperature, long–term operational[11] [12] [13] | 10 | | 40 to 70[14] | °C |
| | Array temperature, short–term operational, 500-hour max[12] [15] | 0 | | 10 | °C |
| $T_{WINDOW}$ | Window temperature – operational[16] [22] | | | 85 | °C |
| $\|T_{DELTA}\|$ | Absolute temperature delta between any point on the window edge and the ceramic test point TP1[17] | | | 14 | °C |
| $T_{DP\ -AVG}$ | Average dew point temperature (non-condensing)[18] | | | 28 | °C |
| $T_{DP-ELR}$ | Elevated dew point temperature range (non-condensing)[19] | 28 | | 36 | °C |
| $CT_{ELR}$ | Cumulative time in elevated dew point temperature range | | | 24 | Months |
| $ILL_{\theta}$ | Illumination marginal ray angle[22] | | | 55 | degrees |
| **SOLID STATE ILLUMINATION** | | | | | |
| $ILL_{UV}$ | Illumination power at wavelengths < 410nm[11] [21] | | | 10 | mW/cm2 |
| $ILL_{VIS}$ | Illumination power at wavelengths ≥ 410nm and ≤ 800nm[20] [21] | | | 44.9 | W/cm2 |
| $ILL_{IR}$ | Illumination power at wavelengths > 800nm[21] | | | 10 | mW/cm2 |
| $ILL_{BLU}$ | Illumination power at wavelengths ≥ 410nm and ≤ 475nm[20] [21] | | | 14.3 | W/cm2 |
| $ILL_{BLU1}$ | Illumination power at wavelengths ≥ 410nm and ≤ 440nm [20] [21] | | | 2.3 | W/cm2 |
| **LAMP ILLUMINATION** | | | | | |
| $ILL_{UV}$ | Illumination power at wavelengths < 395nm[11] [21] | | | 2.0 | mW/cm2 |
| $ILL_{VIS}$ | Illumination power at wavelengths ≥ 395nm and ≤ 800nm[20] [21] | | | 36.8 | W/cm2 |
| $ILL_{IR}$ | Illumination power at wavelengths > 800nm[21] | | | 10 | mW/cm2 |

(1) All voltages are referenced to common ground $V_{SS}$. $V_{BIAS}$, $V_{CC}$, $V_{OFFSET}$, and $V_{RESET}$ power supplies are all required for proper DMD operation. $V_{SS}$ must also be connected.
(2) $V_{OFFSET}$ supply transients must fall within specified max voltages.
(3) To prevent excess current, the supply voltage delta $|V_{BIAS} – V_{OFFSET}|$ must be less than specified limit. See Section 8, Figure 8-1, Table 8-1.
(4) To prevent excess current, the supply voltage delta $|V_{BIAS} – V_{RESET}|$ must be less than specified limit. See Section 8, Figure 8-1, Table 8-1.
(5) Low-speed interface is LPSDR and adheres to the Electrical Characteristics and AC/DC Operating Conditions table in JEDEC Standard No. 209B, “Low-Power Double Data Rate (LPDDR)” JESD209B.Tester Conditions for VIH and VIL.
- Frequency = 60MHz. Maximum Rise Time = 2.5ns @ (20% – 80%)
- Frequency = 60MHz. Maximum Fall Time = 2.5ns @ (80% – 20%)

(6) PWRDNZ input pin resets the SCP and disables the LVDS receivers. PWRDNZ input pin overrides SCPENZ input pin and tristates the SCPDO output pin.
(7) The SCP clock is a gated clock. Duty cycle shall be 50% ± 10%. SCP parameter is related to the frequency of DCLK.
(8) See Figure 5-2
(9) See LVDS Timing Requirements in Section 5.8 and Figure 5-6.
(10) Refer to Figure 5-5.
(11) Simultaneous exposure of the DMD to the maximum Section 5.4 for temperature and UV illumination reduces device lifetime.
(12) The array temperature cannot be measured directly and must be computed analytically from the temperature measured at test point 1 (TP1) shown in Figure 6-2 and the package Section 5.5 using the calculation in Section 6.6.


Copyright © 2024 Texas Instruments Incorporated

(13) Long-term is defined as the usable life of the device.
(14) Per Figure 5-1, the maximum operational array temperature should be derated based on the micromirror landed duty cycle that the DMD experiences in the end application. See Section 6.8 for a definition of micromirror landed duty cycle.
(15) Short-term is defined as cumulative time over the usable life of the device.
(16) The locations of thermal test points TP2, TP3, TP4, and TP5 in Figure 6-2 are intended to measure the highest window edge temperature. For most applications, the locations shown are representative of the highest window edge temperature. If a particular application causes additional points on the window edge to be at a higher temperature, test points should be added to those locations.
(17) Temperature delta is the highest difference between the ceramic test point 1 (TP1) and anywhere on the window edge as shown in Figure 6-2. The window test points TP2, TP3, TP4, and TP5 shown in Figure 6-2 are intended to result in the worst-case delta temperature. If a particular application causes another point on the window edge to result in a larger delta in temperature, that point should be used.
(18) The average over time (including storage and operating) that the device is not in the "elevated dew point temperature range."
(19) Exposure to dew point temperatures in the elevated range during storage and operation should be limited to less than a total cumulative time of $CT_{ELR}$.
(20) The maximum allowable optical power incident on the DMD is limited by the maximum optical power density for each wavelength range specified and the micromirror array temperature ($T_{ARRAY}$).
(21) To calculate see Section 6.7.
(22) The maximum marginal ray angle of the incoming illumination light at any point in the micromirror array, including pond of micromirrors (POM), should not exceed 55 degrees from the normal to the device array plane. The device window aperture has not necessarily been designed to allow incoming light at higher maximum angles to pass to the micromirrors, and the device performance has not been tested nor qualified at angles exceeding this. Illumination light exceeding this angle outside the micromirror array (including POM) will contribute to thermal limitations described in this document, and may negatively affect lifetime.

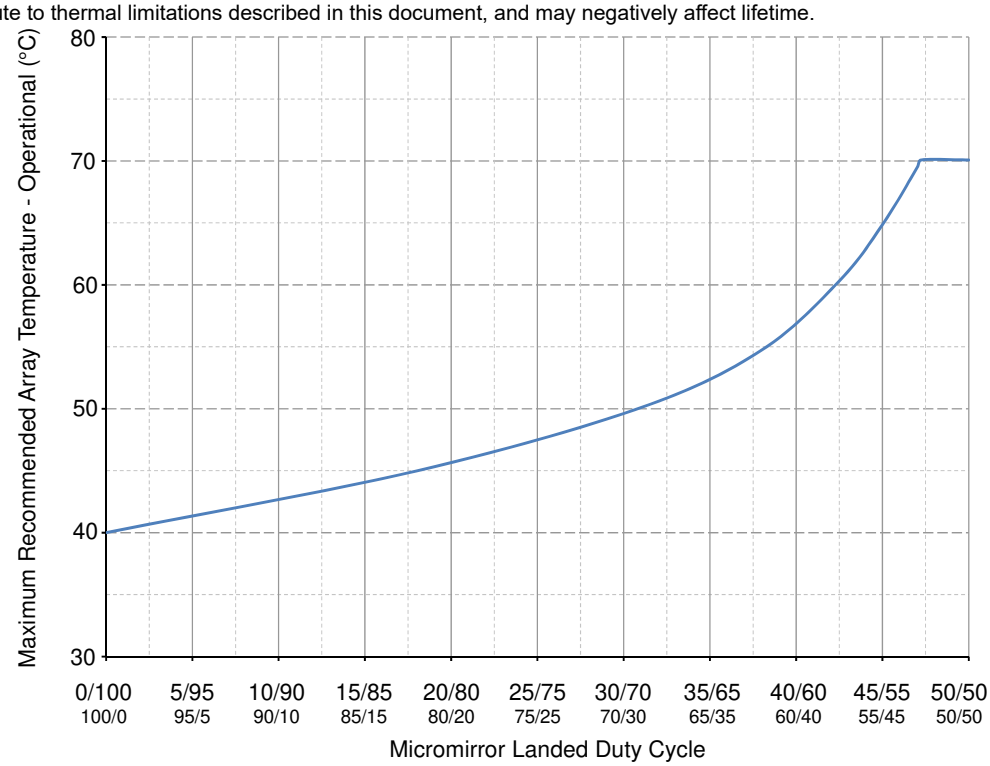


**Figure 5-1. Maximum Recommended Array Temperature—Derating Curve**

## 5.5 Thermal Information

| THERMAL METRIC | DLP470NE FXH Package 257 PINS | UNIT |
|---|---|---|
| Thermal resistance, active area to test point 1 (TP1)[(1)] | 0.90 | °C/W |

(1) The DMD is designed to conduct absorbed and dissipated heat to the back of the package. The cooling system must be capable of maintaining the package within the temperature range specified in the *Recommended Operating Conditions*.
The total heat load on the DMD is largely driven by the incident light absorbed by the active area; although other contributions include light energy absorbed by the window aperture and electrical power dissipation of the array.
Optical systems must be designed to minimize the light energy falling outside the window's clear aperture since any additional thermal load in this area can significantly degrade the reliability of the device.

Copyright © 2024 Texas Instruments Incorporated

## 5.6 Electrical Characteristics

Over operating free-air temperature range (unless otherwise noted).

| PARAMETER | | TEST CONDITIONS | MIN | TYP | MAX | UNIT[1] |
|---|---|---|---|---|---|---|
| $V_{OH}$ | High level output voltage | $V_{CC}$ = 1.8V, $I_{OH}$ = –2mA | 0.8 × $V_{CC}$ | | | V |
| $V_{OL}$ | Low level output voltage | $V_{CC}$ = 1.95V, $I_{OL}$ = 2mA | | | 0.2 × $V_{CC}$ | V |
| $I_{OZ}$ | High impedance output current | $V_{CC}$ = 1.95V | –40 | | 25 | µA |
| $I_{IL}$ | Low level input current | $V_{CC}$ = 1.95V, $V_I$ = 0 | –1 | | | µA |
| $I_{IH}$ | High level input current[2] [3] | $V_{CC}$ = 1.95V, $V_I$ = $V_{CC}$ | | | 110 | µA |
| $I_{CC}$ | Supply current VCC | $V_{CC}$ = 1.95V | | | 715 | mA |
| $I_{OFFSET}$ | Supply current VOFFSET[3] | $V_{OFFSET}$ = 10.5V | | | 7 | mA |
| $I_{BIAS}$ | Supply current VBIAS[3] [4] | $V_{BIAS}$ = 18.5V | | | 2.75 | mA |
| $I_{RESET}$ | Supply current VRESET[4] | $V_{RESET}$ = –14.5V | | | -5 | mA |
| $P_{CC}$ | Supply power dissipation $V_{CC}$ | $V_{CC}$ = 1.95V | | | 1394.25 | mW |
| $P_{OFFSET}$ | Supply power dissipation $V_{OFFSET}$ [3] | $V_{OFFSET}$ = 10.5V | | | 73.50 | mW |
| $P_{BIAS}$ | Supply power dissipation $V_{BIAS}$ [3] [4] | $V_{BIAS}$ = 18.5V | | | 50.87 | mW |
| $P_{RESET}$ | Supply power dissipation $V_{RESET}$ [4] | $V_{RESET}$ = 14.5V | | | 72.5 | mW |
| $P_{TOTAL}$ | Supply power dissipation $V_{TOTAL}$ | | | | 1591.12 | mW |

(1) All voltage values are with respect to the ground pins (VSS).
(2) Applies to LVCMOS pins only. Excludes LVDS pins and MBRST (15:0) pins.
(3) To prevent excess current, the supply voltage difference |VBIAS – VOFFSET| must be less than the specified limits listed in the *Recommended Operating Conditions* table.
(4) To prevent excess current, the supply voltage difference |VBIAS – VRESET| must be less than the specified limit in *Recommended Operating Conditions*.

## 5.7 Capacitance at Recommended Operating Conditions

Over operating free-air temperature range (unless otherwise noted).

| PARAMETER | | TEST CONDITIONS | MIN | TYP | MAX | UNIT |
|---|---|---|---|---|---|---|
| $C_{I_lvds}$ | LVDS input capacitance 2xLVDS | $f$ = 1MHz | | | 20 | pF |
| $C_{I_nonlvds}$ | Non-LVDS input capacitance 2xLVDS | $f$ = 1MHz | | | 20 | pF |
| $C_{I_tdiode}$ | Temperature diode input capacitance 2xLVDS | $f$ = 1MHz | | | 30 | pF |
| $C_O$ | Output capacitance | $f$ = 1MHz | | | 20 | pF |


Copyright © 2024 Texas Instruments Incorporated

## 5.8 Timing Requirements

| | | | MIN | NOM | MAX | UNIT |
|---|---|---|---|---|---|---|
| **SCP**[1] | | | | | | |
| $t_r$ | Rise time | 20% to 80% reference points | | | 30 | ns |
| $t_f$ | Fall time | 80% to 20% reference points | | | 30 | ns |
| **LVDS**[2] | | | | | | |
| $t_r$ | Rise slew rate | 20% to 80% reference points | 0.7 | 1 | | V/ns |
| $t_f$ | Fall slew rate | 80% to 20% reference points | 0.7 | 1 | | V/ns |
| $t_C$ | Clock cycle | DCLK_C,LVDS pair | 2.5 | | | ns |
| | | DCLK_D, LVDS pair | 2.5 | | | ns |
| $t_W$ | Pulse duration | DCLK_C LVDS pair | 1.19 | 1.25 | | ns |
| | | DCLK_D LVDS pair | 1.19 | 1.25 | | ns |
| $t_{Su}$ | Setup time | D_C(15:0) before DCLK_C, LVDS pair | 0.275 | | | ns |
| | | D_D(15:0) before DCLK_D, LVDS pair | 0.275 | | | ns |
| | | SCTRL_C before DCLK_C, LVDS pair | 0.275 | | | ns |
| | | SCTRL_D before DCLK_D, LVDS pair | 0.275 | | | ns |
| $t_h$ | Hold time | D_C(15:0) after DCLK_C, LVDS pair | 0.195 | | | ns |
| | | D_D(15:0) after DCLK_D, LVDS pair | 0.195 | | | ns |
| | | SCTRL_C after DCLK_C, LVDS pair | 0.195 | | | ns |
| | | SCTRL_D after DCLK_D, LVDS pair | 0.195 | | | ns |
| $t_{SKEW}$ | Skew time | Channel D relative to Channel C[3] [4], LVDS pair | –1.25 | | 1.25 | ns |

(1) See Figure 5-3 for Rise Time and Fall Time for SCP.
(2) See Figure 5-5 for Timing Requirements for LVDS.
(3) Channel C (Bus C) includes the following LVDS pairs: DCLK_CN and DCLK_CP, SCTRL_CN and SCTRL_CP, D_CN(15:0) and D_CP(15:0).
(4) Channel D (Bus D) includes the following LVDS pairs: DCLK_DN and DCLK_DP, SCTRL_DN and SCTRL_DP, D_DN(15:0) and D_DP(15:0).

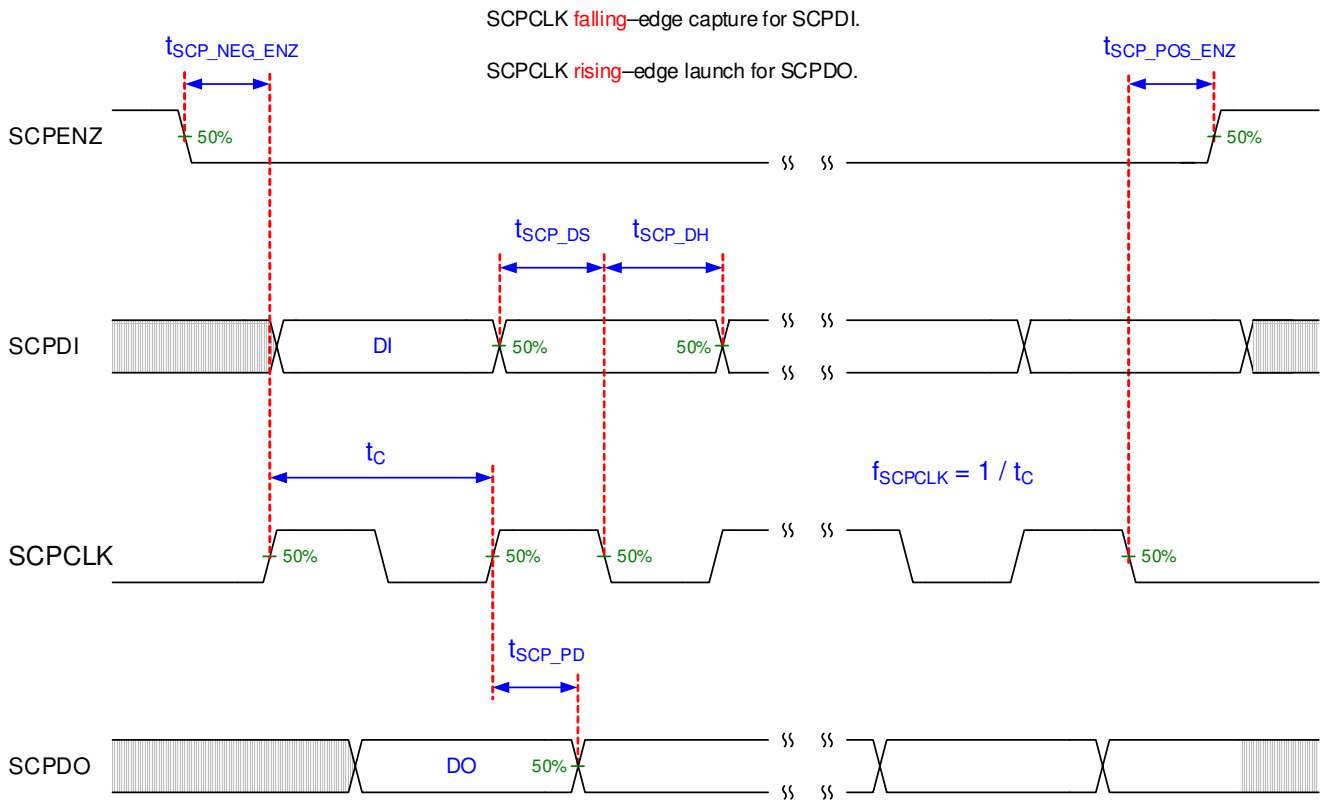


**Figure 5-2. SCP Timing Requirements**

See Recommended Operating Conditions for $f_{SCPCLK}$, $t_{SCP_DS}$, $t_{SCP_DH}$, and $t_{SCP_PD}$ specifications.

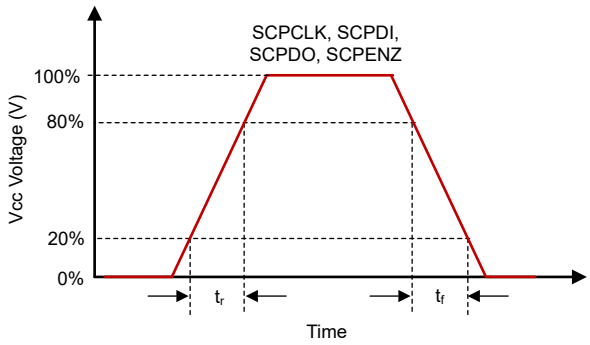


**Figure 5-3. SCP Requirements for Rise and Fall**

See Timing Requirements for $t_r$ and $t_f$ specifications and conditions.

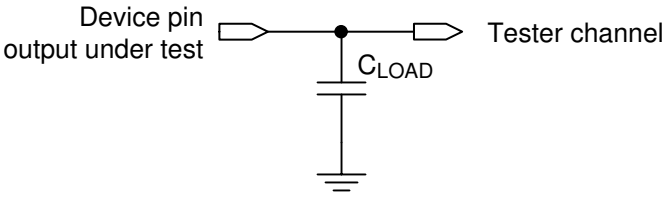


**Figure 5-4. Test Load Circuit for Output Propagation Measurement**


Copyright © 2024 Texas Instruments Incorporated

For output timing analysis, the tester pin electronics and its transmission line effects must be taken into account. System designers use IBIS or other simulation tools to correlate the timing reference load to a system environment. See Figure 5-4.

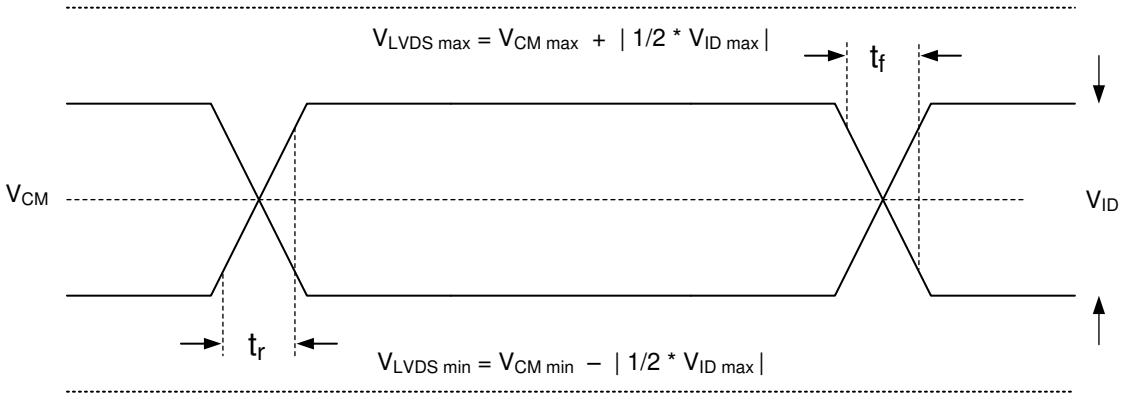


**Figure 5-5. LVDS Waveform Requirements**

See Recommended Operating Conditions for $V_{CM}$, $V_{ID}$, and $V_{LVDS}$ specifications and conditions.

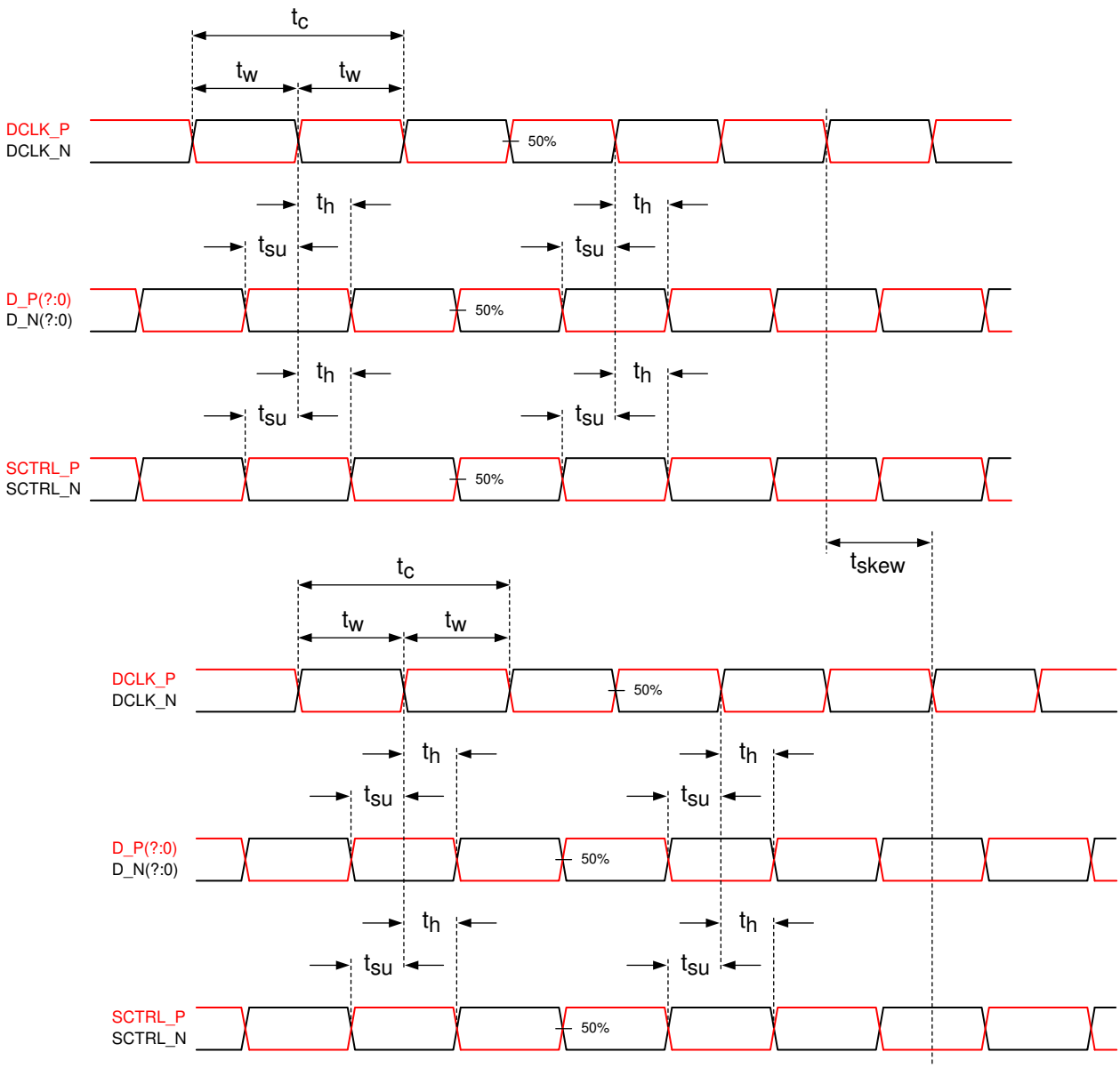


**Figure 5-6. Timing Requirements**

See Timing Requirements for timing requirements and LVDS pairs per channel (bus) defining D_P(?:0) and D_N(?:0).

## 5.9 System Mounting Interface Loads

**Table 5-1. System Mounting Interface Loads**

| PARAMETER | MIN | NOM | MAX | UNIT |
|---|---|---|---|---|
| Thermal interface area(1) | | | 12 | kg |
| Electrical interface area(1) | | | 25 | kg |

(1) Uniformly distributed within area shown in Figure 5-7


Copyright © 2024 Texas Instruments Incorporated

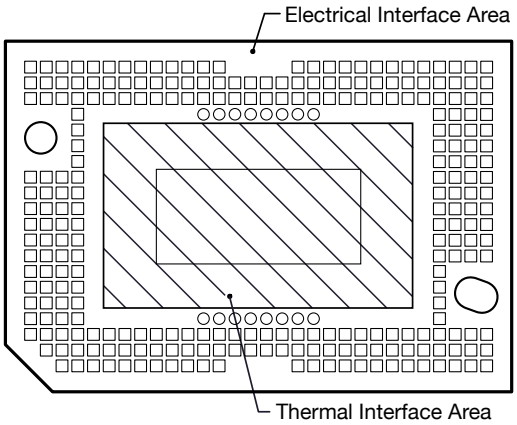


**Figure 5-7. System Mounting Interface Loads**

## 5.10 Micromirror Array Physical Characteristics

**Table 5-2. Micromirror Array Physical Characteristics**

| PARAMETER DESCRIPTION | | VALUE | UNIT |
|---|---|---|---|
| Number of active columns (1) | M | 1920 | micromirrors |
| Number of active rows (1) | N | 1080 | micromirrors |
| Micromirror (pixel) pitch (1) | P | 5.4 | µm |
| Micromirror active array width (1) | Micromirror Pitch × number of active columns | 10.368 | mm |
| Micromirror active array height (1) | Micromirror Pitch × number of active rows | 5.832 | mm |
| Micromirror active border (Top / Bottom) (2) | Pond of micromirrors (POM) | 80 | micromirrors/side |
| Micromirror active border (Right / Left) (2) | Pond of micromirrors (POM) | 84 | micromirrors/side |

(1) See Figure 5-8.
(2) The structure and qualities of the border around the active array includes a band of partially functional micromirrors referred to as the *Pond Of Mirrors* (POM). These micromirrors are structurally and electrically prevented from tilting toward the bright or ON state but still require an electrical bias to tilt toward the OFF state.

Copyright © 2024 Texas Instruments Incorporated

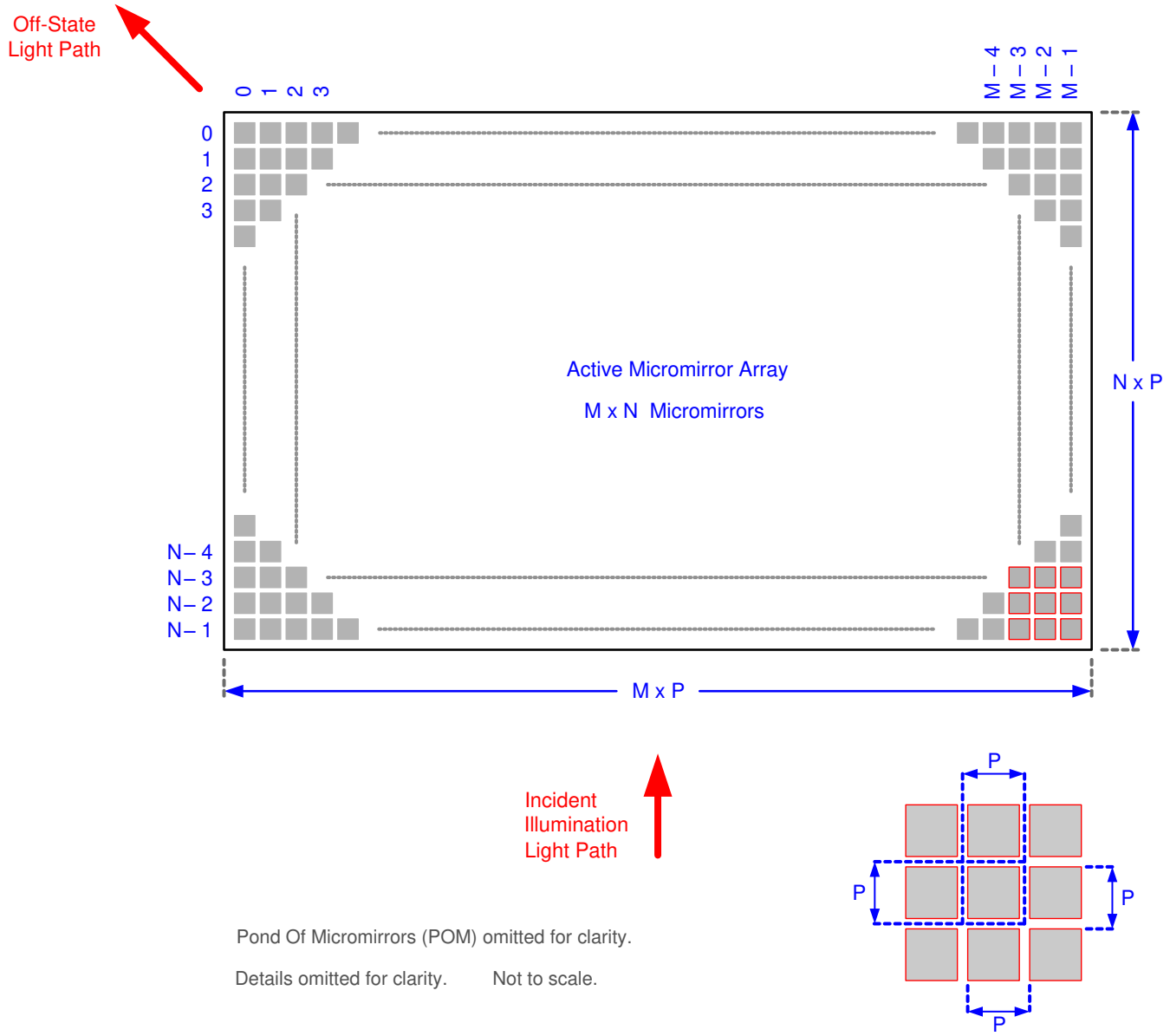


**Figure 5-8. Micromirror Array Physical Characteristics**


Copyright © 2024 Texas Instruments Incorporated

## 5.11 Micromirror Array Optical Characteristics

| PARAMETER | | TEST CONDITION | MIN | NOM | MAX | UNIT |
|---|---|---|---|---|---|---|
| Micromirror tilt angle, variation device to device (2) (3) (4) (5) | | Landed State(1) | 15.6 | 17 | 18.4 | degrees |
| Image performance(6) | Bright pixel(s) in active area(7) | Gray 10 screen(10) | | | 0 | micromirrors |
| | Bright pixel(s) in the POM(7) (9) | Gray 10 screen(10) | | | 1 | |
| | Dark pixel(s) in the active area(8) | White screen(11) | | | 4 | |
| | Adjacent pixel(s)(12) | Any screen | | | 0 | |
| | Unstable pixel(s) in active area(13) | Any screen | | | 0 | |

(1) Measured relative to the plane formed by the overall micromirror array.
(2) Additional variation exists between the micromirror array and the package datums.
(3) This represents the variation that can occur between any two individual micromirrors, locaed on the same device or located on different devices.
(4) For some applications it is critical to account for the micromirror tilt angle variation in the overall system optical design. With some system optical designs the micromirror tilt angle variations within a device may result in perceivable non-uniformities in the light field reflected from the micromirror array. With some system optical designs the micromirror tilt angle variation between devices may result in colorimetry variations, system efficiency variations, or system contrast variations.
(5) See figure Figure 5-9.
(6) Conditions of acceptance. All DMD image performance returns are evaluated using the following projected image test conditions:
- Test set degamma shall be linear.
- Test set brightness and contrast shall be set to nominal.
- The diagonal size of the projected image shall be a minimum of 60 inches.
- The projections screen shall be a 1× gain.
- The projected image shall be inspected from an 8-foot minimum viewing distance.
- The image shall be in focus during all image performance tests.

(7) Bright pixel definition: a single pixel or mirror that is stuck in the ON position and is visibly brighter than the surrounding pixels.
(8) Dark pixel definition: a single pixel or mirror that is stuck in the OFF position and is visibly darker than the surrounding pixels.
(9) POM definition: The rectangular border of off-state mirrors surrounding the active area.
(10) Gray 10 screen definition: A full screen with RGB values set to R=10/255, G=10/255, B=10/255.
(11) White screen definition: A full screen with RGB values set to R=255/255, G=255/255, B=255/255.
(12) Adjacent pixel definition: Two or more stuck pixels sharing a common border or common point. Also referred to as a cluster.
(13) Unstable pixel definition: A single pixel or mirror that does not operate in sequence with parameters loaded into memory. The unstable pixel appears to be flickering asynchronously with the image.

Copyright © 2024 Texas Instruments Incorporated

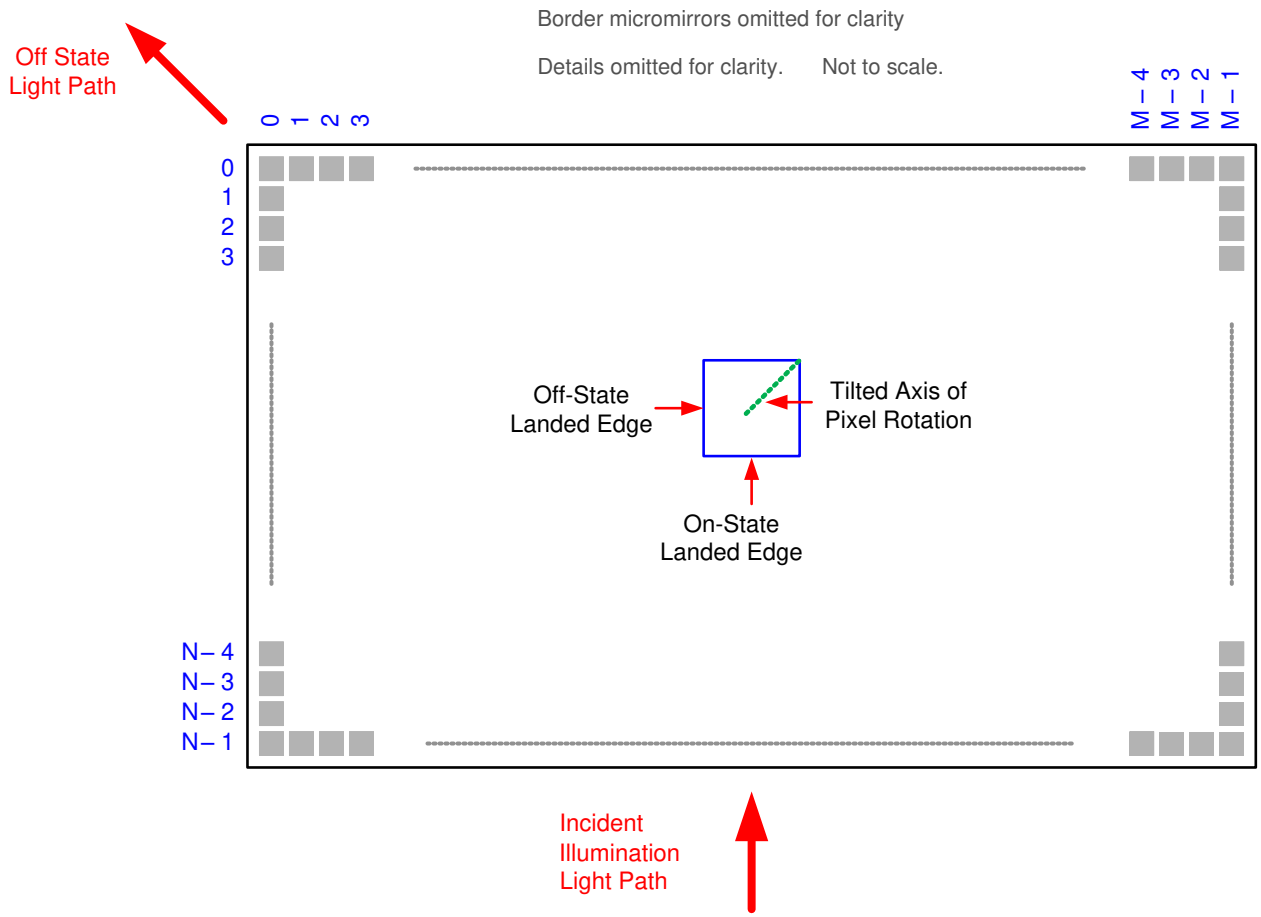


A. Pond of Mirrors (POM) omitted for clarity
B. Refer to Micromirror Array Physical Characteristics table for M, N, and P specifications.

**Figure 5-9. Micromirror Landed Orientation and Tilt**


Copyright © 2024 Texas Instruments Incorporated

## 5.12 Window Characteristics

**Table 5-3. DMD Window Characteristics**

| DESCRIPTION | MIN | NOM |
|---|---|---|
| Window Material | | Corning Eagle XG |
| Window Refractive Index at 546.1nm | | 1.5119 |
| Window Transmittance, minimum within the wavelength range between 420nm and 680nm. Applies to all angles between 0°–30° AOI. (1) (2) | 97% | |
| Window Transmittance, average over the wavelength range 420nm and 680nm. Applies to all angles 30°–45° AOI. (1) (2) | 97% | |

(1) Single-pass through both surfaces and glass.
(2) The angle of incidence (AOI) is the angle between an incident ray and the normal to a reflecting or refracting surface.

## 5.13 Chipset Component Usage Specification

The DLP470NE DMD's reliable function and operation require that it be used in conjunction with the other components of the applicable DLP chipset, including those components that contain or implement TI DMD control technology. TI DMD control technology is the TI technology and devices for operating or controlling a DLP DMD.

# 6 Detailed Description

## 6.1 Overview

The DMD is a 0.47-inch diagonal spatial light modulator that consists of an array of highly reflective aluminum micromirrors. The DMD is an electrical input, optical output micro-electrical-mechanical system (MEMS). The electrical interface is Low Voltage Differential Signaling (LVDS). The DMD consists of a two-dimensional array of 1-bit CMOS memory cells. The array is organized in a grid of M memory cell columns by N memory cell rows. Refer to the Section 6.2. The positive or negative deflection angle of the micromirrors can be individually controlled by changing the address voltage of underlying CMOS addressing circuitry and micromirror reset signals (MBRST).

The DLP470NE DMD is part of the chipset comprising of the DLP470NE DMD, the DLPC4420 display controller, and the DLPA100 power and motor driver. To ensure reliable operation, the DLP470NE DMD must always be used with the DLPC4420 display controller and the DLPA100 power and motor driver.

Copyright © 2024 Texas Instruments Incorporated

## 6.2 Functional Block Diagram

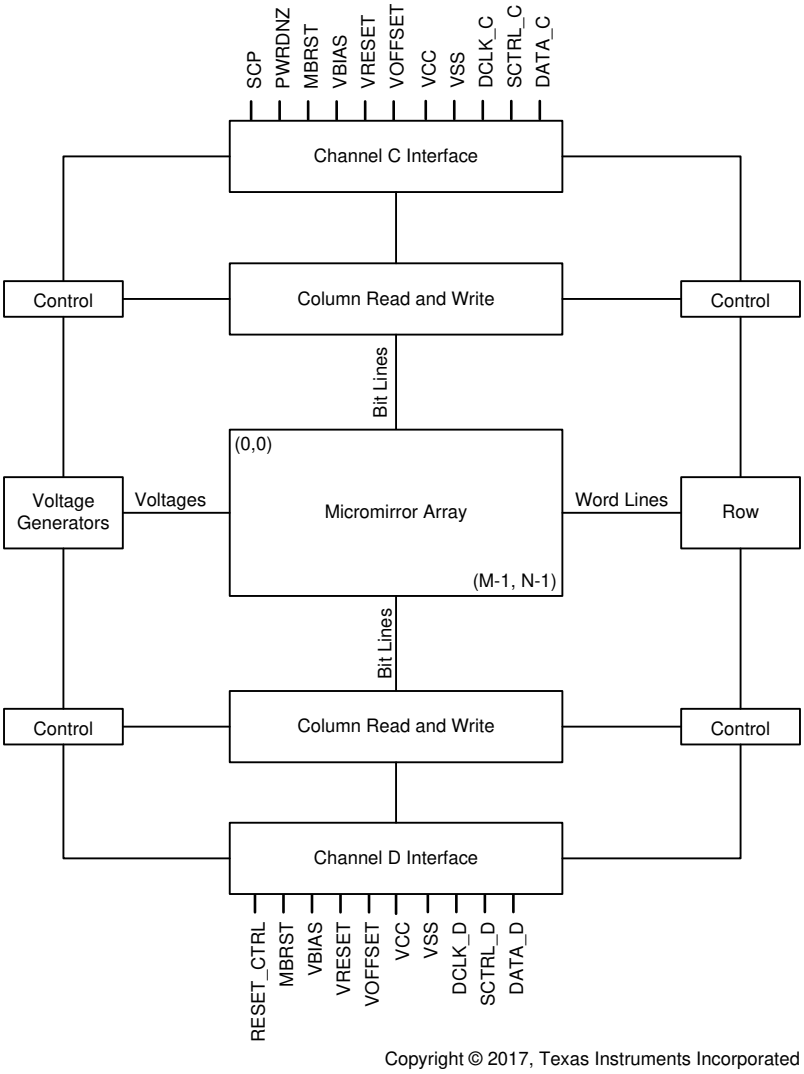


For pin details on Channels C, and D, refer to Pin Configuration and Functions and LVDS Interface section of Section 5.8.
RESET_CTRL is used in applications when an external reset signal is required.

**Figure 6-1. Functional Block Diagram**


Copyright © 2024 Texas Instruments Incorporated

## 6.3 Feature Description

### *6.3.1 Power Interface*

The DMD requires five DC voltages: DMD_P3P3V, DMD_P1P8V, VOFFSET, VRESET, and VBIAS. DMD_P3P3V is created by the DLPA100 power and motor driver and is used on the DMD board to create the other four DMD voltages, as well as powering various peripherals (TMP411, I2C, and TI level translators). DMD_P1P8V is created by the TI PMIC LP38513S and provides the VCC voltage required by the DMD. VOFFSET (10V), VRESET (-14V), and VBIAS (18V) are made by the TI PMIC TPS65145 and are supplied to the DMD to control the micromirrors.

### *6.3.2 Timing*

The data sheet provides timing at the device pin. For output timing analysis, the tester pin electronics and its transmission line effects must be taken into account. Figure 5-4 shows an equivalent test load circuit for the output under test. Timing reference loads are not intended as a precise representation of any particular system environment or depiction of the actual load presented by a production test. System designers: Use IBIS or other simulation tools to correlate the timing reference load to a system environment. The load capacitance value stated is only for characterization and measurement of AC timing signals. This load capacitance value does not indicate the maximum load the device is capable of driving.

## 6.4 Device Functional Modes

DMD functional modes are controlled by the DLPC4420 display controller. See the *DLPC4420 Display Controller Data Sheet* or contact a TI applications engineer.

## 6.5 Optical Interface and System Image Quality Considerations

TI assumes no responsibility for end-equipment optical performance. Achieving the desired end-equipment optical performance involves making trade-offs between numerous component and system design parameters. System optical performance and image quality strongly relate to optical system design parameter trade-offs. Although it is not possible to anticipate every conceivable application, projector image quality and optical performance are contingent on compliance with the optical system operating conditions described in the following sections.

### *6.5.1 Numerical Aperture and Stray Light Control*

The angle defined by the numerical aperture of the illumination and projection optics at the DMD optical area needs to be the same. This angle should not exceed the nominal device micromirror tilt angle unless appropriate apertures are added in the illumination and projection pupils to block out flat-state and stray light from the projection lens. The micromirror tilt angle defines DMD capability to separate the "ON" optical path from any other light path, including undesirable flat-state specular reflections from the DMD window, DMD border structures, or other system surfaces near the DMD such as prism or lens surfaces. If the numerical aperture exceeds the micromirror tilt angle, or if the projection numerical aperture angle is more than two degrees larger than the illumination numerical aperture angle, contrast degradation and objectionable artifacts may occur in the display border or active area.

### *6.5.2 Pupil Match*

TI's optical and image quality specifications assume that the exit pupil of the illumination optics is nominally centered within 2° of the entrance pupil of the projection optics. Misalignment of pupils can create objectionable artifacts in the display border and active area, which may require additional system apertures to control, especially if the numerical aperture of the system exceeds the pixel tilt angle.

### *6.5.3 Illumination Overfill*

The active area of the device is surrounded by an aperture on the inside DMD window surface that masks structures of the DMD chip assembly from normal view and is sized to anticipate several optical operating conditions. Overfill light illuminating the window aperture can create artifacts from the edge of the window aperture opening and other surface anomalies that may be visible on the screen. Design the illumination optical system to limit light flux incident anywhere on the window aperture from exceeding approximately 10% of the

Copyright © 2024 Texas Instruments Incorporated

average flux level in the active area. Depending on the particular system's optical architecture, overfill light may have to be further reduced below the suggested 10% level to be acceptable.

## 6.6 Micromirror Array Temperature Calculation

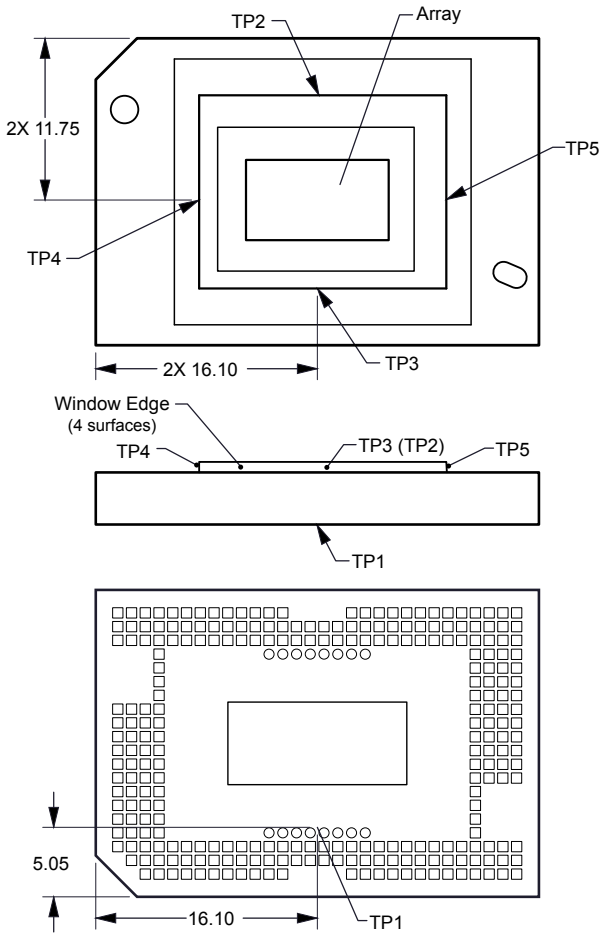


**Figure 6-2. DMD Thermal Test Points**

Micromirror array temperature cannot be measured directly, therefore it must be computed analytically from measurement points on the outside of the package, the package thermal resistance, the electrical power, and the illumination heat load. The following equations show the relationship between array temperature and the reference ceramic temperature, thermal test TP1 Figure 6-2 shown above:

$$T_{ARRAY} = T_{CERAMIC} + (Q_{ARRAY} \times R_{ARRAY\text{-}TO\text{-}CERAMIC})$$

$$Q_{ARRAY} = Q_{ELECTRICAL} + (Q_{ILLUMINATION})$$

where

- $T_{ARRAY}$ = Computed array temperature (°C)
- $T_{CERAMIC}$ = Measured ceramic temperature (°C), TP1 Figure 6-2
- $R_{ARRAY–TO–CERAMIC}$ = Thermal resistance of package specified in Section 5.5 from array to ceramic TP1 Figure 6-2 (°C/W).
- $Q_{ARRAY}$ = Total DMD Power (electrical + absorbed) on the array (W)
- $Q_{ELECTRICAL}$ = Nominal electrical power (W)
- $Q_{INCIDENT}$ = Incident illumination optical power (W)
- $Q_{ILLUMINATION}$ = (DMD average thermal absorptivity × $Q_{INCIDENT}$ (W)


Copyright © 2024 Texas Instruments Incorporated

- DMD average thermal absorptivity = 0.41

The electrical power dissipation of the DMD is variable and depends on the voltages, data rates, and operating frequencies. A nominal electrical power dissipation to use when calculating array temperature is 0.9W. The absorbed optical power from the illumination source is variable and depends on the operating state of the micromirrors and the intensity of the light source. The equations shown above are valid for a single chip or multichip DMD system. It assumes an illumination distribution of 83.7% on the active array and 16.3% on the array border.

The sample calculation for a typical projection application is as follows:

$Q_{INCIDENT}$ = 31W (measured)

$T_{CERAMIC}$= 55.0° (measured)

$Q_{ELECTRICAL}$ = 0.9W

$Q_{ARRAY}$ = 0.9W + (0.41 × 31W) = 13.61W

$T_{ARRAY}$ = 55.0°C + (13.61W × 0.90°C/W) = 67.2°C

## 6.7 Micromirror Power Density Calculation

The calculation of the optical power density of the illumination on the DMD in the different wavelength bands uses the total measured optical power on the DMD, percent illumination overfill, area of the active array, and the ratio of the spectrum in the wavelength band of interest to the total spectral optical power.

- $ILL_{UV} = [OP_{UV\text{-}RATIO} \times Q_{INCIDENT}] \times 1000mW/W \div A_{ILL}$ (mW/cm$^2$)
- $ILL_{VIS} = [OP_{VIS\text{-}RATIO} \times Q_{INCIDENT}] \div A_{ILL}$ (W/cm$^2$)
- $ILL_{IR} = [OP_{IR\text{-}RATIO} \times Q_{INCIDENT}] \times 1000mW/W \div A_{ILL}$ (mW/cm$^2$)
- $ILL_{BLU} = [OP_{BLU\text{-}RATIO} \times Q_{INCIDENT}] \div A_{ILL}$ (W/cm$^2$)
- $ILL_{BLU1} = [OP_{BLU1\text{-}RATIO} \times Q_{INCIDENT}] \div A_{ILL}$ (W/cm$^2$)
- $A_{ILL} = A_{ARRAY} \div (1 - OV_{ILL})$ (cm$^2$)

where:

- $ILL_{UV}$ = UV illumination power density on the DMD (mW/cm$^2$)
- $ILL_{VIS}$ = VIS illumination power density on the DMD (W/cm$^2$)
- $ILL_{IR}$ = IR illumination power density on the DMD (mW/cm$^2$)
- $ILL_{BLU}$ = BLU illumination power density on the DMD (W/cm$^2$)
- $ILL_{BLU1}$ = BLU1 illumination power density on the DMD (W/cm$^2$)
- $A_{ILL}$ = illumination area on the DMD (cm$^2$)
- $Q_{INCIDENT}$ = total incident optical power on DMD (W) (measured)
- $A_{ARRAY}$ = area of the array (cm $^2$) (data sheet)
- $OV_{ILL}$ = percent of total illumination on the DMD outside the array (%) (optical model)
- $OP_{UV\text{-}RATIO}$ = ratio of the optical power for wavelengths <410nm to the total optical power in the illumination spectrum (spectral measurement)
- $OP_{VIS\text{-}RATIO}$ = ratio of the optical power for wavelengths ≥410 and ≤800nm to the total optical power in the illumination spectrum (spectral measurement)

Copyright © 2024 Texas Instruments Incorporated

- $OP_{IR\text{-}RATIO}$ = ratio of the optical power for wavelengths >800nm to the total optical power in the illumination spectrum (spectral measurement)
- $OP_{BLU\text{-}RATIO}$ = ratio of the optical power for wavelengths ≥410nm and ≤475nm to the total optical power in the illumination spectrum (spectral measurement)
- $OP_{BLU1\text{-}RATIO}$ = ratio of the optical power for wavelengths ≥410nm and ≤440nm to the total optical power in the illumination spectrum (spectral measurement)

The illumination area varies and depends on the illumination overfill. The total illumination area on the DMD is the array area and the overfill area around the array. The optical model is used to determine the percent of the total illumination on the DMD that is outside the array ($OV_{ILL}$) and the percent of the total illumination that is on the active array. From these values, the illumination area ($A_{ILL}$) is calculated. The illumination is assumed to be uniform across the entire array.

From the measured illumination spectrum, the ratio of the optical power in the wavelength bands of interest to the total optical power is calculated.

Sample calculation:

$Q_{INCIDENT}$ = 31W (measured)

$A_{ARRAY}$ = (10.3680mm × 5.8320mm) ÷ 100mm$^2$/cm$^2$ = 0.6047cm$^2$ (data sheet)

$OV_{ILL}$ = 16.3% (optical model)

$OP_{UV\text{-}RATIO}$ = 0.00017 (spectral measurement)

$OP_{VIS\text{-}RATIO}$ = 0.99977 (spectral measurement)

$OP_{IR\text{-}RATIO}$ = 0.00006 (spectral measurement)

$OP_{BLU\text{-}RATIO}$ = 0.28100 (spectral measurement)

$OP_{BLU1\text{-}RATIO}$ = 0.03200 (spectral measurement)

$A_{ILL}$ = 0.6047cm$^2$ ÷ (1 - 0.163) = 0.7224cm$^2$

$ILL_{UV}$ = [0.00017 × 31W] × 1000mW/W ÷ 0.7224cm$^2$ = 7.295mW/cm$^2$

$ILL_{VIS}$ = [0.99977 × 31W] ÷ 0.7224cm$^2$ = 42.90W/cm$^2$

$ILL_{IR}$ = [0.00006 × 31W] × 1000mW/W ÷ 0.7224cm$^2$ = 2.575mW/cm$^2$

$ILL_{BLU}$ = [0.28100 × 31W] ÷ 0.7224cm$^2$ = 12.06W/cm$^2$

$ILL_{BLU1}$ = [0.03200 × 31W] ÷ 0.7224cm$^2$ = 1.37W/cm$^2$

## 6.8 Micromirror Landed-On/Landed-Off Duty Cycle

### *6.8.1 Definition of Micromirror Landed-On/Landed-Off Duty Cycle*

The micromirror landed-on/landed-off duty cycle (landed duty cycle) denotes the amount of time (as a percentage) that an individual micromirror is landed in the On state versus the amount of time the same micromirror is landed in the OFF state.

As an example, a landed duty cycle of 100/0 indicates that the referenced pixel is in the ON state 100% of the time (and in the Off state 0% of the time); whereas, 0/100 indicates that the pixel is in the OFF state 100% of the time. Likewise, 50/50 indicates that the pixel is ON for 50% of the time (and OFF for 50% of the time).


Copyright © 2024 Texas Instruments Incorporated

Note that when assessing the landed duty cycle, the time spent switching from one state (ON or OFF) to the other state (OFF or ON) is considered negligible and is thus ignored.

Since a micromirror can only be landed in one state or the other (ON or OFF), the two numbers (percentages) always add to 100.

### 6.8.2 Landed Duty Cycle and Useful Life of the DMD

Knowing the long-term average landed duty cycle (of the end product or application) is important because subjecting all (or a portion) of the DMD micromirror array (also called the active array) to an asymmetric landed duty cycle for a prolonged period of time can reduce the DMD usable life.

Note that it is the symmetry or asymmetry of the landed duty cycle that is of relevance. The symmetry of the landed duty cycle is determined by how close the two numbers (percentages) are to being equal. For example, a landed duty cycle of 50/50 is perfectly symmetrical whereas a landed duty cycle of 100/0 or 0/100 is perfectly asymmetrical.

### 6.8.3 Landed Duty Cycle and Operational DMD Temperature

Operational DMD temperature and landed duty cycle interact to affect DMD usable life, and this interaction can be exploited to reduce the impact that an asymmetrical landed duty cycle has on the DMD usable life. This is quantified in the derating curve shown in Figure 5-1. The importance of this curve is that:

- All points along this curve represent the same usable life.
- All points above this curve represent lower usable life (and the further away from the curve, the lower the usable life).
- All points below this curve represent higher usable life (and the further away from the curve, the higher the usable life).

In practice, this curve specifies the maximum operating DMD Temperature at a given long-term average Landed Duty Cycle.

### 6.8.4 Estimating the Long-Term Average Landed Duty Cycle of a Product or Application

During a given period of time, the Landed Duty Cycle of a given pixel follows from the image content being displayed by that pixel.

For example, in the simplest case, when displaying pure-white on a given pixel for a given time period, that pixel operates under a 100/0 Landed Duty Cycle during that time period. Likewise, when displaying pure-black, the pixel operates under a 0/100 Landed Duty Cycle.

Between the two extremes (ignoring for the moment color and any image processing that may be applied to an incoming image), the Landed Duty Cycle tracks one-to-one with the gray scale value, as shown in Table 6-1.

**Table 6-1. Grayscale Value and Landed Duty Cycle**

| GRAYSCALE VALUE | LANDED DUTY CYCLE |
|---|---|
| 0% | 0/100 |
| 10% | 10/90 |
| 20% | 20/80 |
| 30% | 30/70 |
| 40% | 40/60 |
| 50% | 50/50 |
| 60% | 60/40 |
| 70% | 70/30 |
| 80% | 80/20 |
| 90% | 90/10 |
| 100% | 100/0 |


Copyright © 2024 Texas Instruments Incorporated

Accounting for color rendition (but still ignoring image processing) requires knowing both the color intensity (from 0% to 100%) for each constituent primary color (red, green, and blue) for the given pixel as well as the color cycle time for each primary color, where “color cycle time” is the total percentage of the frame time that a given primary must be displayed in order to achieve the desired white point.

Use this equation to calculate the landed duty cycle of a given pixel during a given time period:

Landed Duty Cycle =

(Red_Cycle_% × Red_Scale_Value) +

(Green_Cycle_% × Green_Scale_Value) +

(Blue_Cycle_% × Blue_Scale_Value)

where

- Red_Cycle_%, represents the percentage of the frame time that red is displayed to achieve the desired white point
- Green_Cycle_% represents the percentage of the frame time that green is displayed to achieve the desired white point
- Blue_Cycle_%, represents the percentage of the frame time that blue is displayed to achieve the desired white point

For example, assume that the red, green and blue color cycle times are 50%, 20%, and 30% respectively (in order to achieve the desired white point), then the Landed Duty Cycle for various combinations of red, green, blue color intensities are as shown in Table 6-2 and Table 6-3.

**Table 6-2. Example Landed Duty Cycle for Full-Color, Color Percentage**

| CYCLE PERCENTAGE | | |
|---|---|---|
| RED | GREEN | BLUE |
| 50% | 20% | 30% |

**Table 6-3. Example Landed Duty Cycle for Full-Color**

| SCALE VALUE | | | LANDED DUTY CYCLE |
|---|---|---|---|
| RED | GREEN | BLUE | |
| 0% | 0% | 0% | 0/100 |
| 100% | 0% | 0% | 50/50 |
| 0% | 100% | 0% | 20/80 |
| 0% | 0% | 100% | 30/70 |
| 12% | 0% | 0% | 6/94 |
| 0% | 35% | 0% | 7/93 |
| 0% | 0% | 60% | 18/82 |
| 100% | 100% | 0% | 70/30 |
| 0% | 100% | 100% | 50/50 |
| 100% | 0% | 100% | 80/20 |
| 12% | 35% | 0% | 13/87 |
| 0% | 35% | 60% | 25/75 |
| 12% | 0% | 60% | 24/76 |
| 100% | 100% | 100% | 100/0 |

Copyright © 2024 Texas Instruments Incorporated

# 7 Application and Implementation

**Note**

Information in the following applications sections is not part of the TI component specification, and TI does not warrant its accuracy or completeness. TI's customers are responsible for determining suitability of components for their purposes. Customers should validate and test their design implementation to confirm system functionality.

## 7.1 Application Information

Texas Instruments DLP technology is a micro-electro-mechanical systems (MEMS) technology that modulates light using a digital micromirror device (DMD). The DMD is a spatial light modulator, which reflects incoming light from an illumination source in one of two directions, towards the projection optics or collection optics. Typical applications using the DLP470NE include home theater, digital signage, interactive displays, low-latency gaming displays, and portable smart displays.

The most recent class of chipsets from Texas Instruments is based on a breakthrough micromirror technology, called TRP. With a smaller pixel pitch of 5.4 µm and an increased tilt angle of 17 degrees, TRP chipsets enable higher resolution in a smaller form factor and enhanced image processing features while maintaining high optical efficiency. DLP chipsets are a great fit for any system that requires high-resolution and high-brightness displays.

The following orderables were replaced by the DLP470NE.

**Device Information**

| PART NUMBER | PACKAGE | BODY SIZE (NOM) | Mechanical ICD |
|---|---|---|---|
| DLP470NETA | FXH (257) | 33.2mm × 22.3mm | 2516206 |
| 1910-5432B | FXH (257) | 33.2mm × 22.3mm | 2516206 |
| 1910-5437B | FXH (257) | 33.2mm × 22.3mm | 2516206 |
| 1910-543AB | FXH (257) | 33.2mm × 22.3mm | 2516206 |

## 7.2 Typical Application

The DLP470NE digital micromirror device (DMD), combined with a DLPC4420 (or DLPC4430) digital controller and DLPA100 power management device, provides full HD resolution for bright, colorful display applications. Figure 7-1 shows a typical display system using the DLP470NE and additional system components.

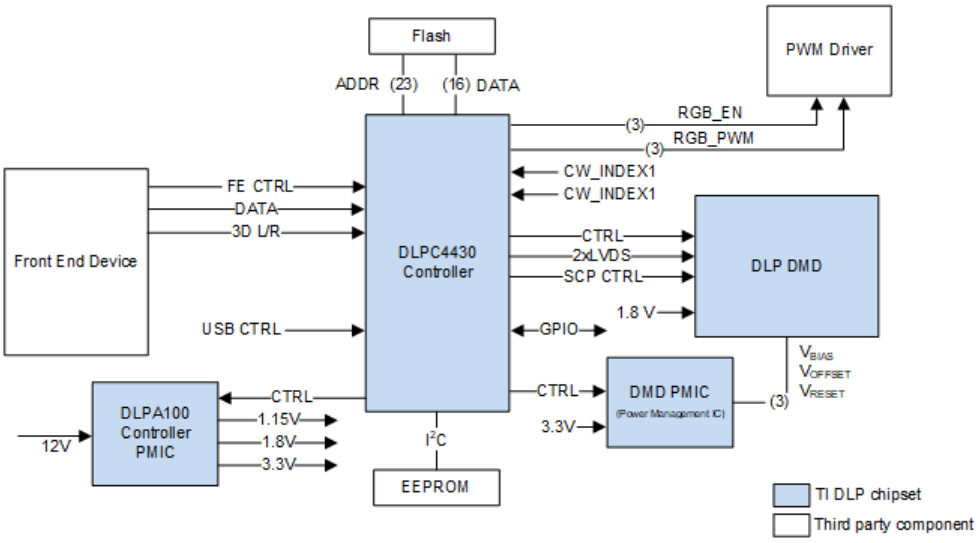



Copyright © 2024 Texas Instruments Incorporated

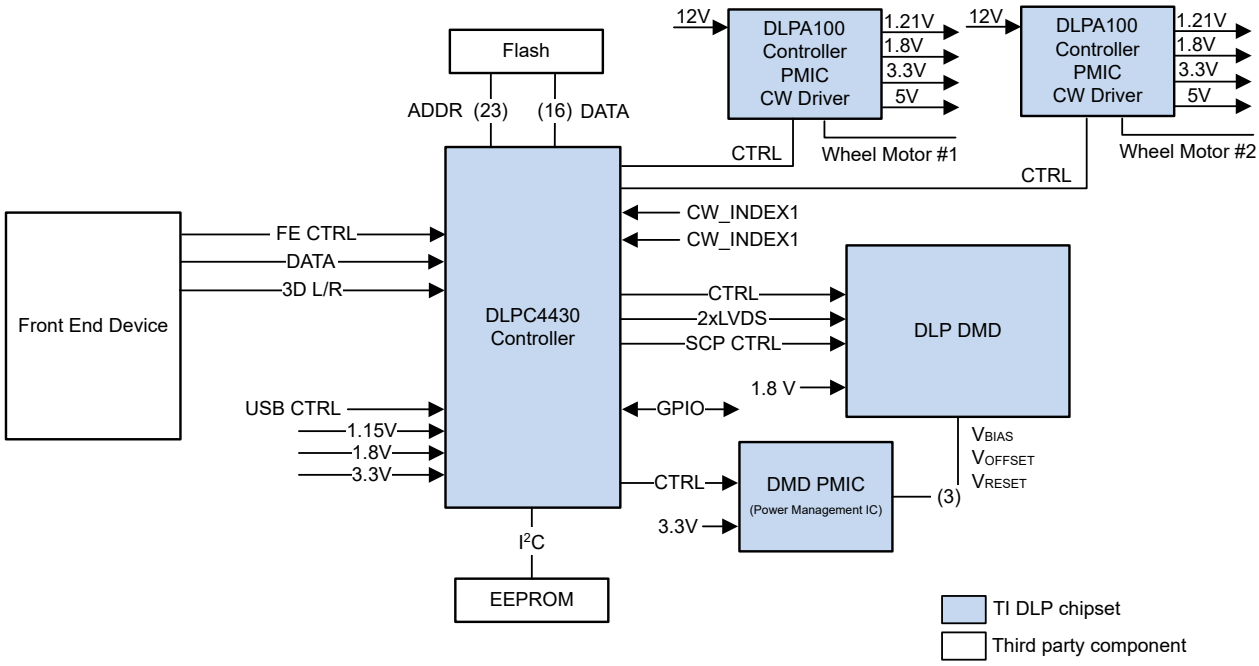


**Figure 7-1. Typical DLPC4430 Application (LED, Top; LPCW, Bottom)**

### *7.2.1 Design Requirements*

A DLP470NE projection system is created by using the DMD chipset, including the DLP470NE, DLPC4420, and DLPA100. The DLP470NE is used as the core imaging device in the display system and contains a 0.47-inch array of micromirrors. The DLPC4420 controller is the digital interface between the DMD and the rest of the system, taking digital input from the front-end receiver and driving the DMD over a high-speed interface. The DLPA100 power management device provides voltage regulators for the DMD, controller, and illumination functionality.

Other core components of the display system include an illumination source, an optical engine for the illumination and projection optics, other electrical and mechanical components, and software. The illumination source options include lamp, LED, laser, or laser phosphor. The type of illumination used and desired brightness have a major effect on the overall system design and size.

### *7.2.2 Detailed Design Procedure*

For connecting the DLPC4420 display controller and the DLP470NE DMD, see the reference design schematic. For a complete DLP system, an optical module or light engine is required that contains the DLP470NE DMD, associated illumination sources, optical elements, and necessary mechanical components.

To ensure reliable operation, the DLP470NE DMD must always be used with the DLPC4420 display controller and a DLPA100 PMIC driver. Refer to PCB Design Requirements for DLP Standard TRP Digital Micromirror Devices for the DMD board design and manufacturing handling of the DMD subassemblies.

### *7.2.3 Application Curves*

When LED illumination is used, a typical LED-current-to-Luminance relationship is shown in Figure 7-2.

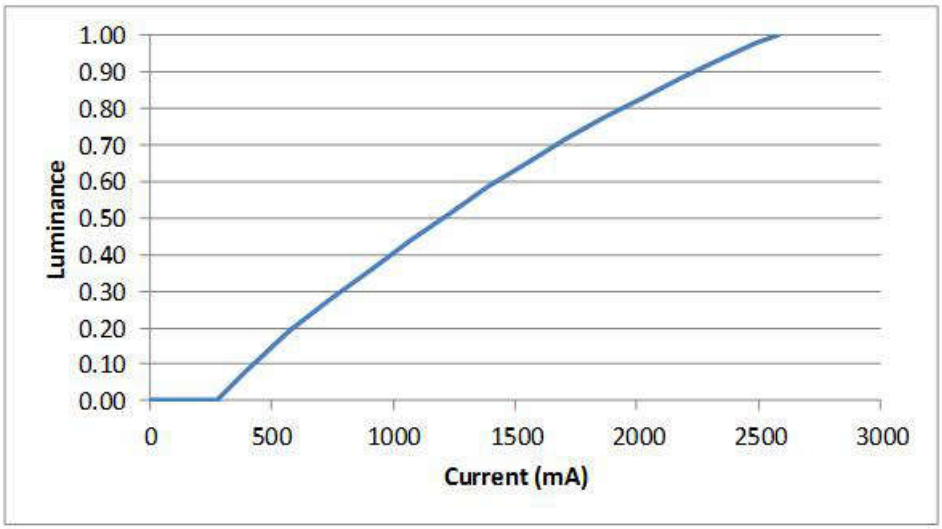


**Figure 7-2. Luminance vs. Current**

## 7.3 DMD Die Temperature Sensing

The DMD features a built-in thermal diode that measures the temperature at one corner of the die outside the micromirror array. The thermal diode can be interfaced with the TMP411 temperature sensor, as shown in Figure 7-3. The serial bus from the TMP411 can be connected to the DLPC4420 display controller to enable its temperature-sensing features. See the *DLPC4420 Programmers' Guide* for instructions on installing the DLPC4420 controller support firmware bundle and obtaining the temperature readings.

The software application contains functions to configure the TMP411 to read the DMD temperature sensor diode. This data can be leveraged to incorporate additional functionality in the overall system design such as adjusting illumination, fan speeds, and so forth. All communication between the TMP411 and the DLPC4420 controller is completed using the $I^2C$ interface. The TMP411 connects to the DMD via pins B17 and B18, as outlined in Section 4.


Copyright © 2024 Texas Instruments Incorporated

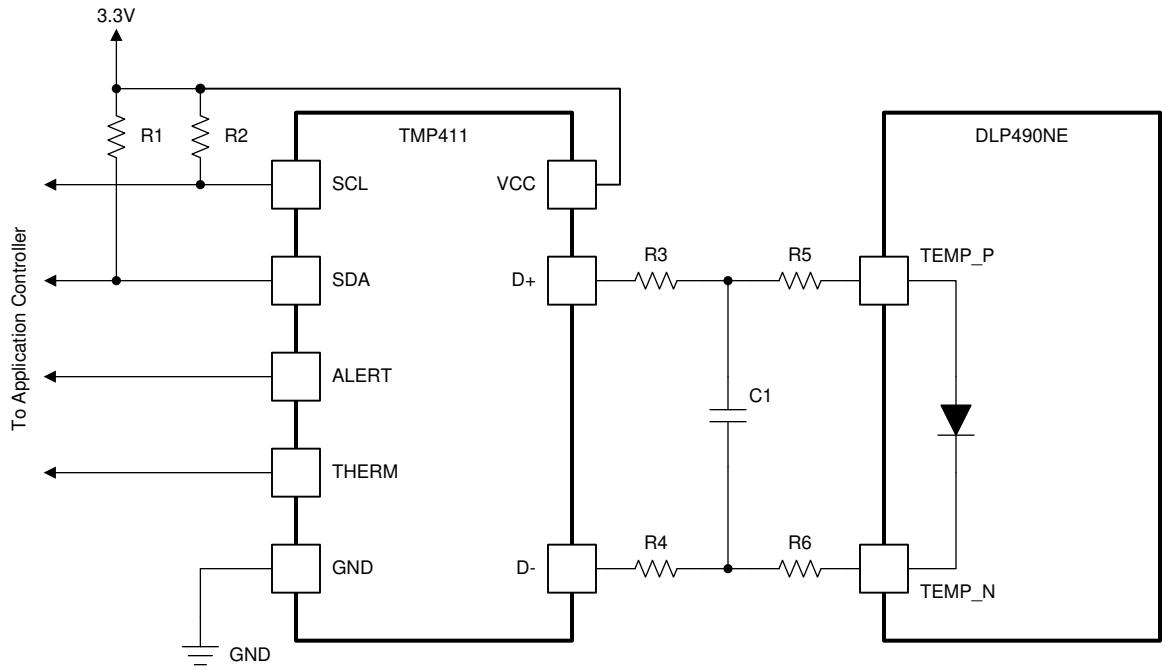


A. Details omitted for clarity, see the TI Reference Design for connections to the DLPC4420 controller.
B. See the TMP411 data sheet for system board layout recommendation.
C. See the TMP411 data sheet and the TI reference design for suggested component values for R1, R2, R3, R4, and C1.
D. R5 = 0Ω. R6 = 0Ω. Zero-ohm resistors need to be located close to the DMD package pins.

**Figure 7-3. TMP411 Sample Schematic**

# 8 Power Supply Recommendations

The following power supplies are all required to operate the DMD:

- VSS
- VBIAS
- VCC
- VOFFSET
- VRESET

DMD power-up and power-down sequencing is strictly controlled by the DLP display controller.

**CAUTION**

For reliable operation of the DMD, the following power supply sequencing requirements must be followed. Failure to adhere to any of the prescribed power-up and power-down requirements may affect device reliability. See Figure 8-1 DMD Power Supply Sequencing Requirements.

VBIAS, VCC, VOFFSET, and VRESET power supplies must be coordinated during power-up and power-down operations. Failure to meet any of the below requirements will result in a significant reduction in the DMD reliability and lifetime. Common ground VSS must also be connected.

## 8.1 DMD Power Supply Power-Up Procedure

- During power-up, VCC must always start and settle before VOFFSET plus Delay1 specified in Table 8-1, VBIAS, and VRESET voltages are applied to the DMD.
- During power-up, it is a strict requirement that the voltage difference between VBIAS and VOFFSET must be within the specified limit shown in Section 5.4.
- During power-up, there is no requirement for the relative timing of VRESET with respect to VBIAS.
- Power supply slew rates during power-up are flexible, provided that the transient voltage levels follow the requirements specified in Section 5.1, in Section 5.4, and in Figure 8-1.
- During power-up, LVCMOS input pins must not be driven high until after VCC have settled at operating voltages listed in Section 5.4.

## 8.2 DMD Power Supply Power-Down Procedure

- During power-down, VCC must be supplied until after VBIAS, VRESET, and VOFFSET are discharged to within the specified limit of ground. See Table 8-1.
- During power-down, it is a strict requirement that the voltage difference between VBIAS and VOFFSET must be within the specified limit shown in Section 5.4.
- During power-down, there is no requirement for the relative timing of VRESET with respect to VBIAS.
- Power supply slew rates during power-down are flexible, provided that the transient voltage levels follow the requirements specified in Section 5.1, in Section 5.4, and in Figure 8-1.
- During power-down, LVCMOS input pins must be less than specified in Section 5.4.


Copyright © 2024 Texas Instruments Incorporated

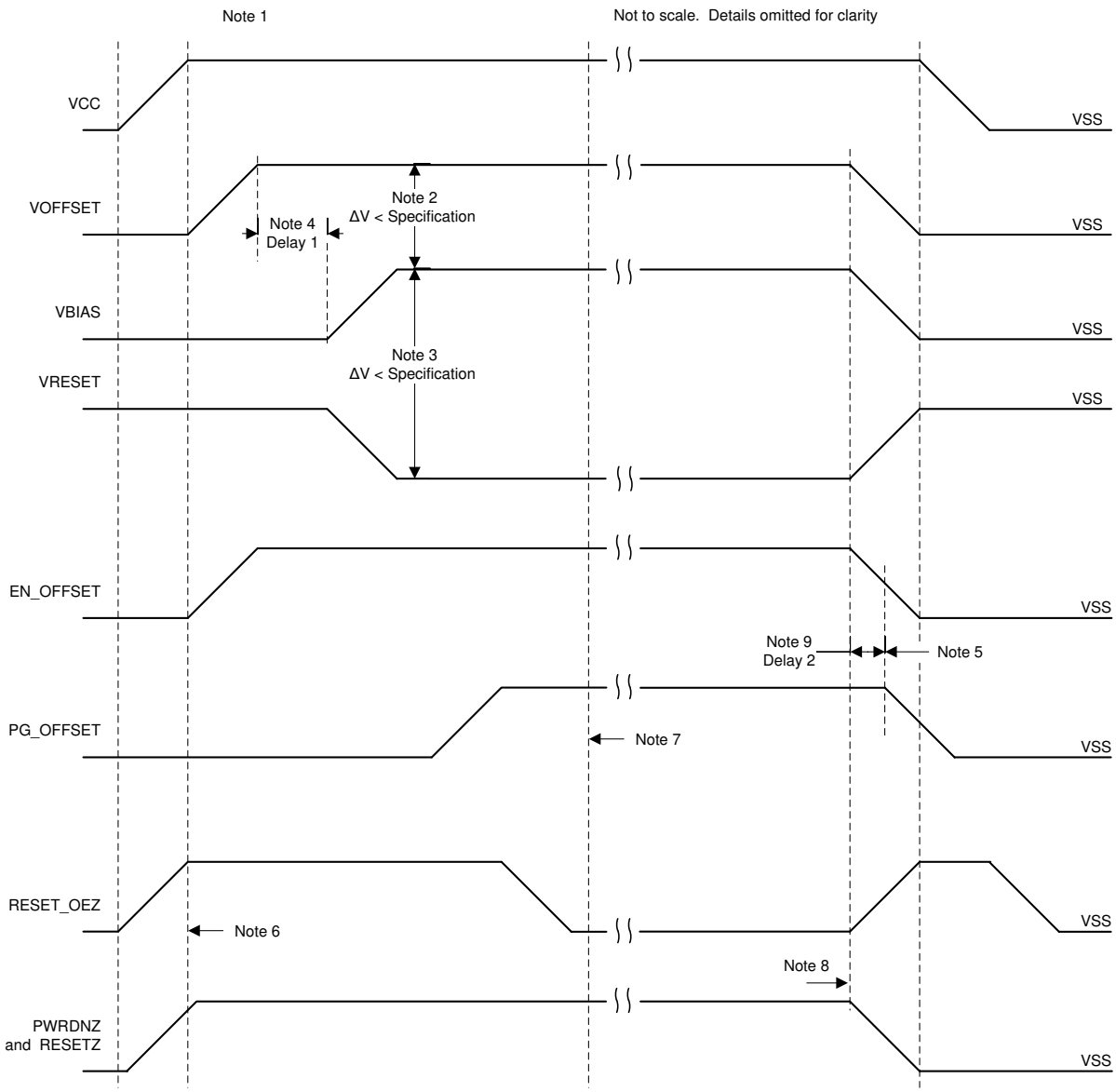


A. See Section 5.4 and Pin Configuration and Functions.
B. To prevent excess current, the supply voltage difference |VOFFSET – VBIAS| must be less than specified limit in Section 5.4.
C. To prevent excess current, the supply difference |VBIAS – VRESET| must be less than specified limit in Section 5.4.
D. VBIAS must power up after VOFFSET has powered up, per the Delay1 specification in Table 8-1.
E. PG_OFFSET must turn off after EN_OFFSET has turned off, per the Delay2 specification in Table 8-1.
F. DLP controller software enables the DMD power supplies to turn on after RESET_OEZ is at logic high.
G. DLP controller software initiates the global VBIAS command.
H. After the DMD micromirror park sequence is complete, the DLP controller software initiates a hardware power-down that activates PWRDNZ and disables VBIAS, VRESET and VOFFSET.
I. Under power-loss conditions where emergency DMD micromirror park procedures are being enacted by the DLP controller hardware, EN_OFFSET may turn off after PG_OFFSET has turned off. The OEZ signal goes high prior to PG_OFFSET turning off to indicate the DMD micromirror has completed the emergency park procedures.

**Figure 8-1. DMD Power Supply Requirements**

**Table 8-1. DMD Power-Supply Requirements**

| PARAMETER | DESCRIPTION | MIN | NOM | MAX | UNIT |
|---|---|---|---|---|---|
| Delay1 | Delay from VOFFSET settled at recommended operating voltage to VBIAS and VRESET power up | 1 | 2 | | ms |

**Table 8-1. DMD Power-Supply Requirements (continued)**

| PARAMETER | DESCRIPTION | MIN | NOM | MAX | UNIT |
|---|---|---|---|---|---|
| Delay2 | PG_OFFSET hold time after EN_OFFSET goes low | 100 | | | ns |


Copyright © 2024 Texas Instruments Incorporated

# 9 Layout

## 9.1 Layout Guidelines

The DLP470NE DMD is part of a chipset controlled by the DLPC4420 display controller in conjunction with the DLPA100 power and motor driver. These guidelines help to design a PCB board with the DLP470NE DMD. The DLP470NE DMD board is a high-speed multilayer PCB, with primarily high-speed digital logic using dual-edge clock rates up to 400MHz for DMD LVDS signals. The remaining traces are comprised of low speed digital LVTTL signals. TI recommends that mini power planes are used for VOFFSET, VRESET, and VBIAS. Solid planes are required for DMD_P3P3V(3.3V), DMD_P1P8V and Ground. The target impedance for the PCB is 50Ω ±10% with the LVDS traces being 100Ω ±10% differential. Use an 8-layer stack-up, as described in Table 9-1.

## 9.2 Layout Example

### *9.2.1 Layers*

The layer stack-up and copper weight for each layer are shown in Table 9-1 . Small subplanes are allowed on signal routing layers to connect components to major subplanes on top or bottom layers if necessary.

**Table 9-1. Layer Stack-Up**

| LAYER NO. | LAYER NAME | COPPER WT. (oz.) | COMMENTS |
|---|---|---|---|
| 1 | Side A - DMD only | 1.5 | DMD, escapes, low-frequency signals, power subplanes |
| 2 | Ground | 1 | Solid ground plane (net GND) |
| 3 | Signal | 0.5 | 50Ω and 100Ω differential signals |
| 4 | Ground | 1 | Solid ground plane (net GND) |
| 5 | DMD_P3P3V | 1 | +3.3V power plane (net DMD_P3P3V) |
| 6 | Signal | 0.5 | 50Ω and 100Ω differential signals |
| 7 | Ground | 1 | Solid ground plane (net GND) |
| 8 | Side B - All other Components | 1.5 | Discrete components, low-frequency signals, power subplanes |

### *9.2.2 Impedance Requirements*

TI recommends that the board has matched impedance of 50Ω ±10% for all signals. The exceptions are listed in Table 9-2.

**Table 9-2. Special Impedance Requirements**

| Signal Type | Signal Name | Impedance (ohms) |
|---|---|---|
| C channel LVDS differential pairs | DDCP(0:15), DDCN(0:15) | 100 ±10% differential across each pair |
| | DCLKC_P, DCLKC_N | |
| | SCTRL_CP, SCTRL_CN | |
| D channel LVDS differential pairs | DDDP(0:15), DDDN(0:15) | 100 ±10% differential across each pair |
| | DCLKD_P, DCLKD_N | |
| | SCTRL_DP, SCTRL_DN | |

### *9.2.3 Trace Width, Spacing*

Unless otherwise specified, TI recommends that all signals follow the 0.005-inch / 0.005-inch design rule. Minimum trace clearance from the ground ring around the PWB has a 0.1-inch minimum. An analysis of impedance and stack-up requirements determine the actual trace widths and clearances.

#### 9.2.3.1 Voltage Signals

**Table 9-3. Special Trace Widths, Spacing Requirements**

| SIGNAL NAME | MINIMUM TRACE WIDTH TO PINS (MIL) | LAYOUT REQUIREMENT |
|---|---|---|
| GND | 15 | Maximize trace width to connecting pin |

**Table 9-3. Special Trace Widths, Spacing Requirements (continued)**

| SIGNAL NAME | MINIMUM TRACE WIDTH TO PINS (MIL) | LAYOUT REQUIREMENT |
|---|---|---|
| DMD_P3P3V | 15 | Maximize trace width to connecting pin |
| DMD_P1P8V | 15 | Maximize trace width to connecting pin |
| VOFFSET | 15 | Create mini plane from U2 to U3 |
| VRESET | 15 | Create mini plane from U2 to U3 |
| VBIAS | 15 | Create mini plane from U2 to U3 |
| All U3 control connections | 10 | Use 10mil etch to connect all signals/voltages to DMD pads |


Copyright © 2024 Texas Instruments Incorporated

# 10 Device and Documentation Support

## 10.1 Third-Party Products Disclaimer

TI'S PUBLICATION OF INFORMATION REGARDING THIRD-PARTY PRODUCTS OR SERVICES DOES NOT CONSTITUTE AN ENDORSEMENT REGARDING THE SUITABILITY OF SUCH PRODUCTS OR SERVICES OR A WARRANTY, REPRESENTATION OR ENDORSEMENT OF SUCH PRODUCTS OR SERVICES, EITHER ALONE OR IN COMBINATION WITH ANY TI PRODUCT OR SERVICE.

## 10.2 Device Support

### *10.2.1 Device Nomenclature*

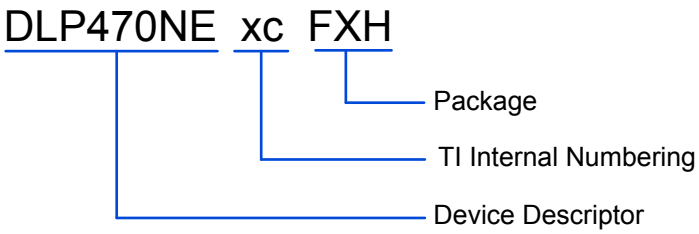


**Figure 10-1. Part Number Description**

### *10.2.2 Device Markings*

The device marking includes both human-readable information and a 2-dimensional matrix code. The human-readable information is described in Figure 10-2. The 2-dimensional matrix code is an alpha-numeric character string that contains the DMD part number, part 1 of serial number, and part 2 of serial number.

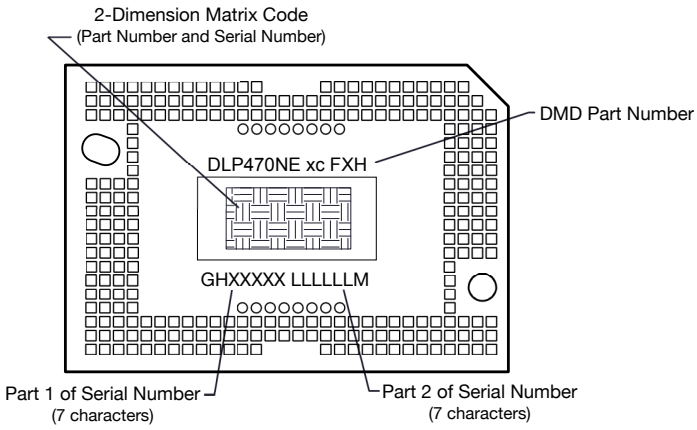


**Figure 10-2. DMD Marking Locations**

## 10.3 Documentation Support

### *10.3.1 Related Documentation*

The following documents contain additional information related to the chipset components used with the DLP470NE.

- *DLPC4430 Display Controller Data Sheet*
- *DLPC4420 Display Controller Data Sheet*
- *DLPA100 Power and Motor Driver Data Sheet*

### 10.4 Receiving Notification of Documentation Updates

To receive notification of documentation updates, navigate to the device product folder on ti.com. In the upper right corner, click on *Alert me* to register and receive a weekly digest of any product information that has changed. For change details, review the revision history included in any revised document.

### 10.5 Support Resources

TI E2E™ support forums are an engineer's go-to source for fast, verified answers and design help — straight from the experts. Search existing answers or ask your own question to get the quick design help you need.

Linked content is provided "AS IS" by the respective contributors. They do not constitute TI specifications and do not necessarily reflect TI's views; see TI's Terms of Use.

### 10.6 Trademarks

TI E2E™ is a trademark of Texas Instruments.
DLP® is a registered trademark of Texas Instruments.
All trademarks are the property of their respective owners.

### 10.7 Electrostatic Discharge Caution

This integrated circuit can be damaged by ESD. Texas Instruments recommends that all integrated circuits be handled with appropriate precautions. Failure to observe proper handling and installation procedures can cause damage.

ESD damage can range from subtle performance degradation to complete device failure. Precision integrated circuits may be more susceptible to damage because very small parametric changes could cause the device not to meet its published specifications.

### 10.8 Glossary

| | |
|---|---|
| TI Glossary | This glossary lists and explains terms, acronyms, and definitions. |

## 11 Revision History

NOTE: Page numbers for previous revisions may differ from page numbers in the current version.

| Changes from Revision C (February 2023) to Revision D (December 2024) | Page |
|---|---|
| • Updated the main controller to DLPC4420 throughout document | 1 |
| • Added DLPC4420 as supported display controller | 1 |
| • Added links to DLP Products third-party search tools, and Getting Started With TI DLP Display Technology | 1 |
| • Updated section Recommended Operating Conditions | 11 |
| • Updated Micromirror Array Optical Characteristics Table | 21 |
| • Updated controller name to DLPC4420 and added link to DLPC4420 data sheet | 25 |
| • Updated Micromirror Array Temperature Calculation | 26 |
| • Added section Micromirror Power Density Calculation | 27 |
| • Changed controller name to DLPC4420 | 34 |

| Changes from Revision B (June 2022) to Revision C (February 2023) | Page |
|---|---|
| • Updated the controller to DLPC4430, linked the chipset components to product pages | 1 |
| • Changed controller name to DLPC4430 | 1 |
| • Added the lamp illumination section to the table | 11 |
| • Changed controller name to DLPC4430 | 23 |
| • Changed controller name to DLPC4430 | 25 |
| • Added a table with legacy device information, added the mechanical ICD | 32 |
| • Changed controller name to DLPC4430 | 32 |
| • Changed controller name to DLPC4430 | 33 |
| • Changed controller name to DLPC4430 | 33 |


Copyright © 2024 Texas Instruments Incorporated

- Changed controller name to DLPC4430.....34
- Changed controller name to DLPC4430.....39
- Changed controller name to DLPC4430, updated the links..... 41

## Mechanical, Packaging, and Orderable Information

The following pages include mechanical, packaging, and orderable information. This information is the most current data available for the designated devices. This data is subject to change without notice and revision of this document. For browser-based versions of this data sheet, refer to the left-hand navigation.


Copyright © 2024 Texas Instruments Incorporated

## PACKAGING INFORMATION

| Orderable part number | Status (1) | Material type (2) | Package \| Pins | Package qty \| Carrier | RoHS (3) | Lead finish/ Ball material (4) | MSL rating/ Peak reflow (5) | Op temp (°C) | Part marking (6) |
|---|---|---|---|---|---|---|---|---|---|
| DLP470NEAAFXH | Last Time Buy | Production | CLGA (FXH) \| 257 | 33 \| JEDEC TRAY (5+1) | Yes | Call TI | N/A for Pkg Type | 0 to 70 | |
| DLP470NEAAFXH.B | Last Time Buy | Production | CLGA (FXH) \| 257 | 33 \| JEDEC TRAY (5+1) | Yes | Call TI | N/A for Pkg Type | 0 to 70 | |

(1) **Status:** For more details on status, see our product life cycle.

(2) **Material type:** When designated, preproduction parts are prototypes/experimental devices, and are not yet approved or released for full production. Testing and final process, including without limitation quality assurance, reliability performance testing, and/or process qualification, may not yet be complete, and this item is subject to further changes or possible discontinuation. If available for ordering, purchases will be subject to an additional waiver at checkout, and are intended for early internal evaluation purposes only. These items are sold without warranties of any kind.

(3) **RoHS values:** Yes, No, RoHS Exempt. See the TI RoHS Statement for additional information and value definition.

(4) **Lead finish/Ball material:** Parts may have multiple material finish options. Finish options are separated by a vertical ruled line. Lead finish/Ball material values may wrap to two lines if the finish value exceeds the maximum column width.

(5) **MSL rating/Peak reflow:** The moisture sensitivity level ratings and peak solder (reflow) temperatures. In the event that a part has multiple moisture sensitivity ratings, only the lowest level per JEDEC standards is shown. Refer to the shipping label for the actual reflow temperature that will be used to mount the part to the printed circuit board.

(6) **Part marking:** There may be an additional marking, which relates to the logo, the lot trace code information, or the environmental category of the part.

Multiple part markings will be inside parentheses. Only one part marking contained in parentheses and separated by a "~" will appear on a part. If a line is indented then it is a continuation of the previous line and the two combined represent the entire part marking for that device.

**Important Information and Disclaimer:**The information provided on this page represents TI's knowledge and belief as of the date that it is provided. TI bases its knowledge and belief on information provided by third parties, and makes no representation or warranty as to the accuracy of such information. Efforts are underway to better integrate information from third parties. TI has taken and continues to take reasonable steps to provide representative and accurate information but may not have conducted destructive testing or chemical analysis on incoming materials and chemicals. TI and TI suppliers consider certain information to be proprietary, and thus CAS numbers and other limited information may not be available for release.

In no event shall TI's liability arising out of such information exceed the total purchase price of the TI part(s) at issue in this document sold by TI to Customer on an annual basis.

© COPYRIGHT 2018 TEXAS INSTRUMENTS UN-PUBLISHED, ALL RIGHTS RESERVED.

REVISIONS

| REV | DESCRIPTION | DATE | APPROVED |
|---|---|---|---|
| A | ECO 2174191, INITIAL RELEASE | 05/11/2018 | F. ARMSTRONG |

NOTES: UNLESS OTHERWISE SPECIFIED:

1. SUBSTRATE EDGE PERPENDICULARITY TOLERANCE APPLIES TO ENTIRE SURFACE
2. DIE PARALLELISM TOLERANCE APPLIES TO DMD ACTIVE ARRAY ONLY
3. ROTATION ANGLE OF DMD ACTIVE ARRAY IS A REFINEMENT OF THE LOCATION TOLERANCE AND HAS A MAXIMUM ALLOWED VALUE OF 0.8 DEGREES
4. SUBSTRATE SYMBOLIZATION PAD, AND PLATING AT BOTTOM OF DATUMS B AND C HOLES TO BE ELECTRICALLY CONNECTED TO VSS PLANE WITHIN THE SUBSTRATE BOUNDARY MIRRORS SURROUNDING THE DMD ACTIVE AREA
5. MAXIMUM ENCAPSULANT PROFILE SHOWN
6. ENCAPSULANT ALLOWED ON THE SURFACE OF THE CERAMIC IN THE AREA SHOWN IN VIEW B (SHEET 2). ENCAPSULANT SHALL NOT EXCEED 0.200 THICKNESS MAXIMUM.
7. SUBSTRATES PLATED WITH Ni/Au SHALL HAVE THE THREE-DIGIT NUMERICAL MARKING IN THE AREA TO THE LEFT OF THE SYMBOLIZATION PAD. SUBSTRATES PLATED WITH Ni/Pd/Au SHALL HAVE THE MARKING IN THE AREA TO THE RIGHT OF THE SYMBOLIZATION PAD.

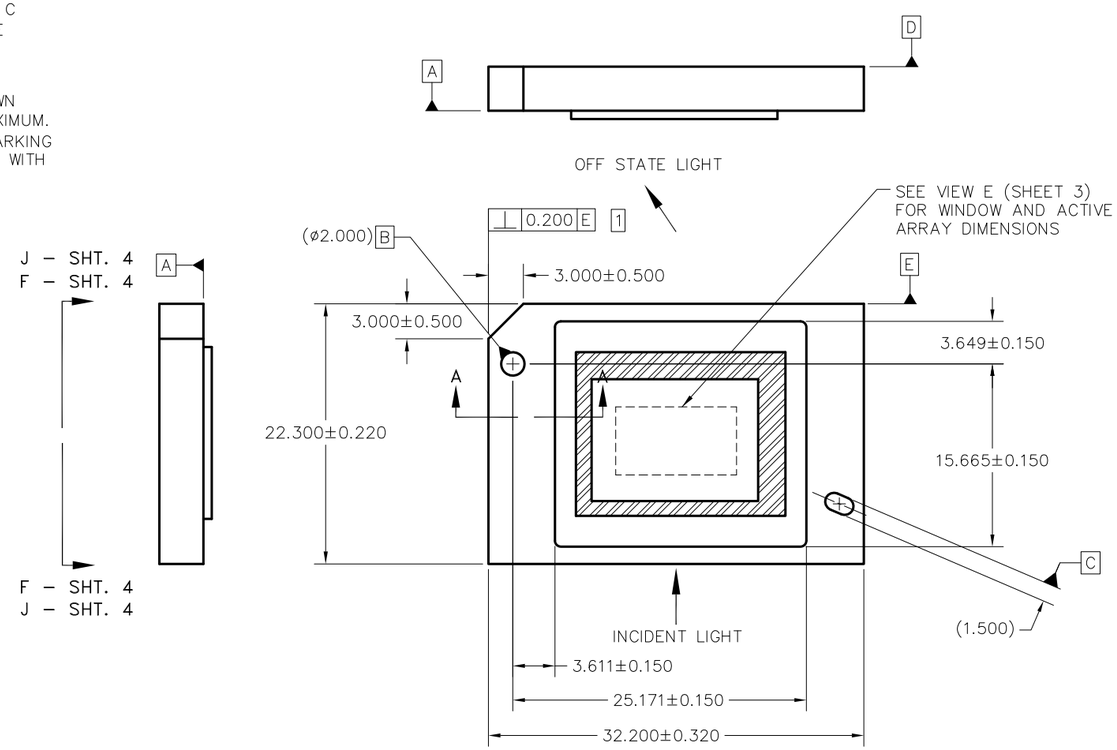


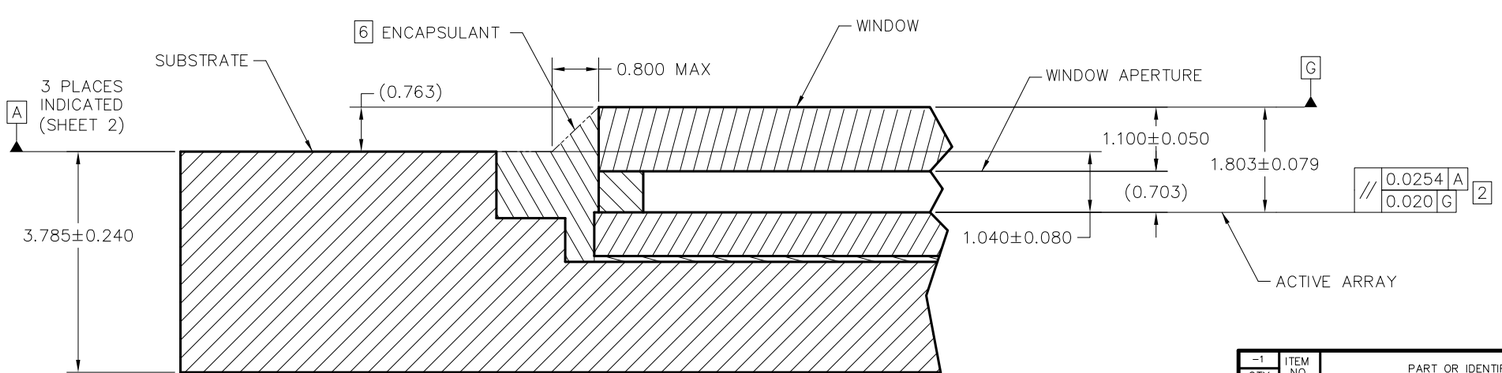


SECTION A–A
SCALE 20/1

| QTY | ITEM NO | PART OR IDENTIFYING NUMBER | NOMENCLATURE OR DESCRIPTION | NOTES |
|---|---|---|---|---|
| | | | | |

PARTS LIST

UNLESS OTHERWISE SPECIFIED
- DIMENSIONS ARE IN MILLIMETERS
- TOLERANCES: ANGLES ± 1°
  2 PLACE DECIMALS ±0.25
  3 PLACE DECIMALS ±0.50
- REMOVE ALL BURRS AND SHARP EDGES
- INTERPRET DIMENSIONS IN ACCORDANCE WITH ASME Y14.5–1994
- DIMENSIONAL LIMITS APPLY BEFORE PROCESSES
- PARENTHETICAL INFO FOR REF ONLY

| | | DATE |
|---|---|---|
| DWN | F. ARMSTRONG | 05/11/2018 |
| ENGR | F. ARMSTRONG | 05/11/2018 |
| QA | F. KONRAD | 05/11/2018 |
| CQE | M. DORAK | 05/11/2018 |

TEXAS INSTRUMENTS
Dallas, Texas

ICD, MECHANICAL, DMD
.47" 1080p MTRP 2xLVDS HB C
SERIES 410 (FXH PACKAGE)

THIRD ANGLE PROJECTION

| NEXT ASSY | USED ON |
|---|---|
| NONE | 0314DA |

APPLICATION

SIZE B | DRAWING NO 2516206 | REV A

SCALE 4/1 | SHEET 1 OF 4

ACED1g

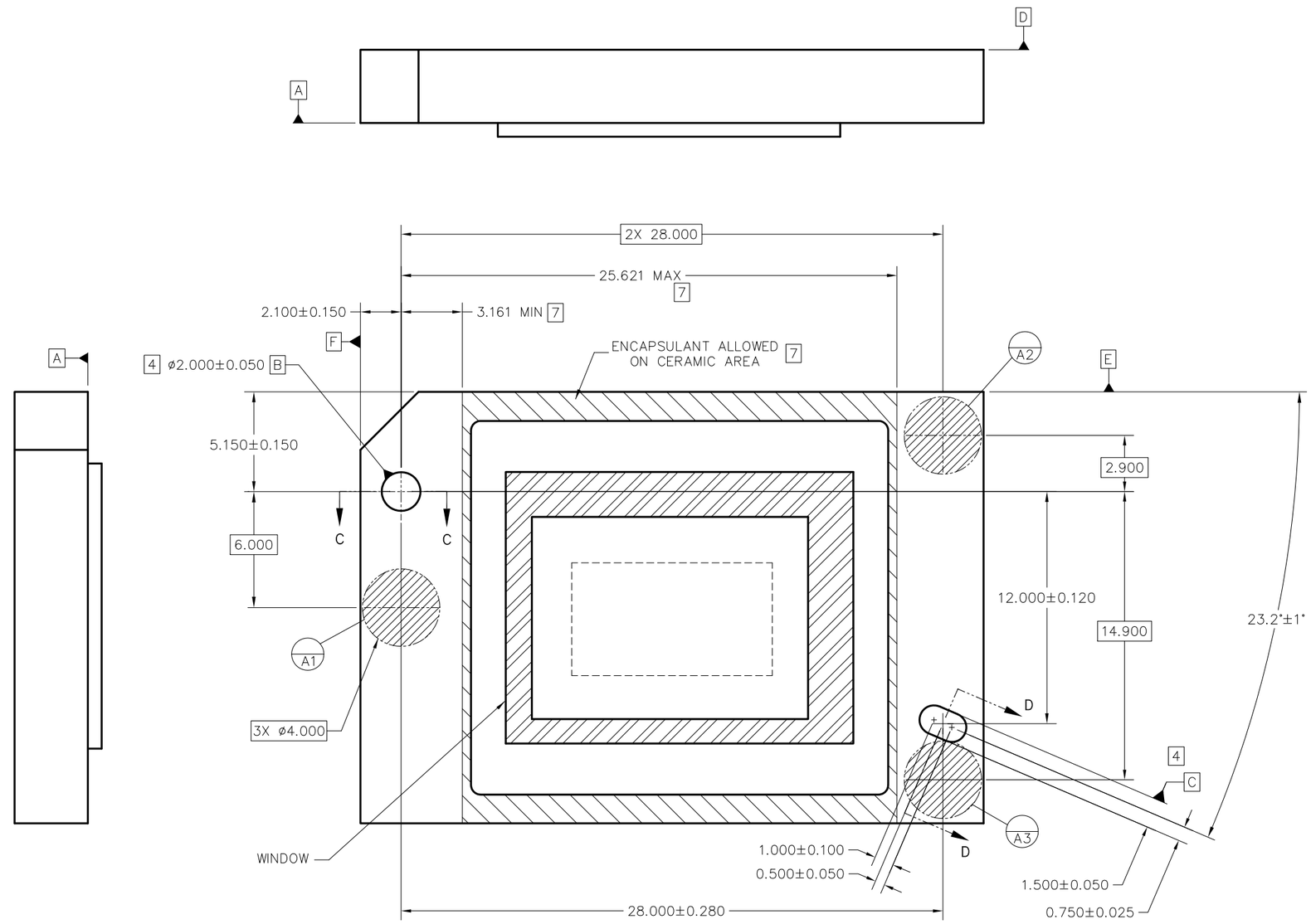


VIEW B
DATUMS AND ENCAPSULANT ALLOWABLE AREA
SCALE 8/1

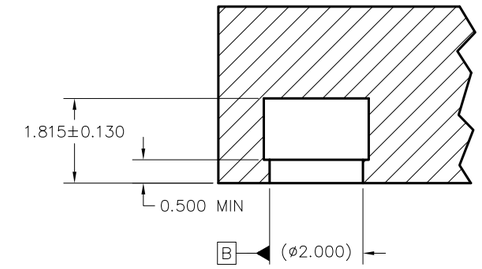


SECTION C–C
DATUM B
SCALE 16/1

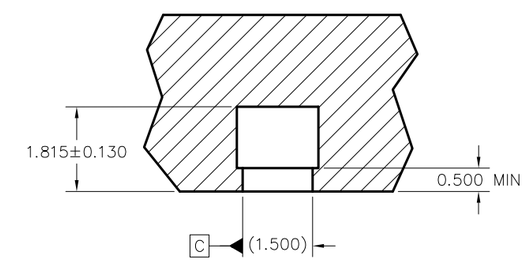


SECTION D–D
DATUM C
SCALE 16/1

| | | | | |
|---|---|---|---|---|
| TEXAS INSTRUMENTS Dallas, Texas | DWN DATE / ISSUE DATE | SIZE B / SCALE 4/1 | DRAWING NO 2516206 / SHEET 2 | REV A |

ACED2c

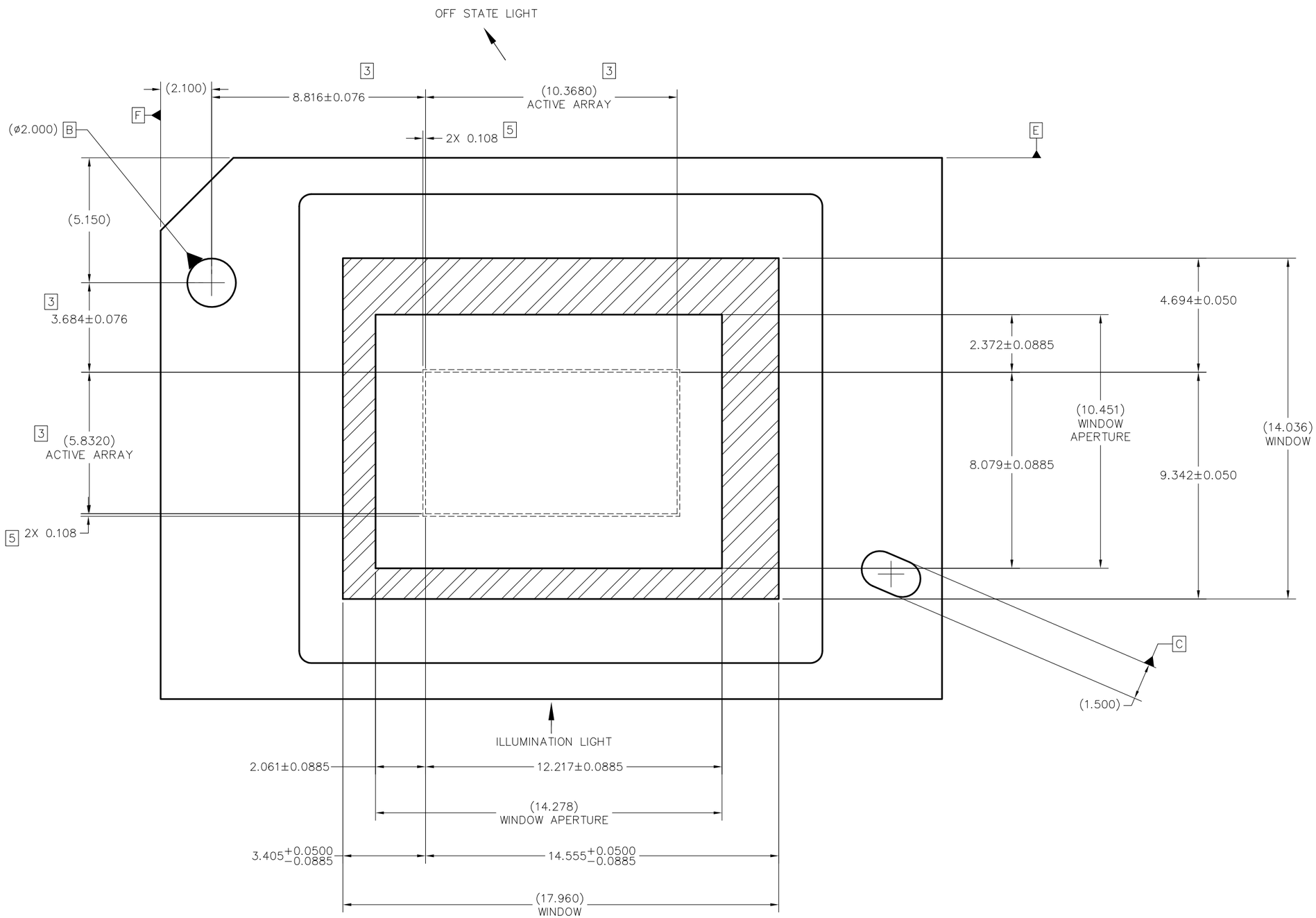


VIEW E (SHEET 1)
DMD WINDOW AND ACTIVE ARRAY
SCALE 12:1

| | | | | |
|---|---|---|---|---|
| TEXAS INSTRUMENTS Dallas, Texas | DWN DATE / ISSUE DATE | SIZE B / SCALE 4/1 | DRAWING NO 2516206 / SHEET 3 | REV A |

ACED2c

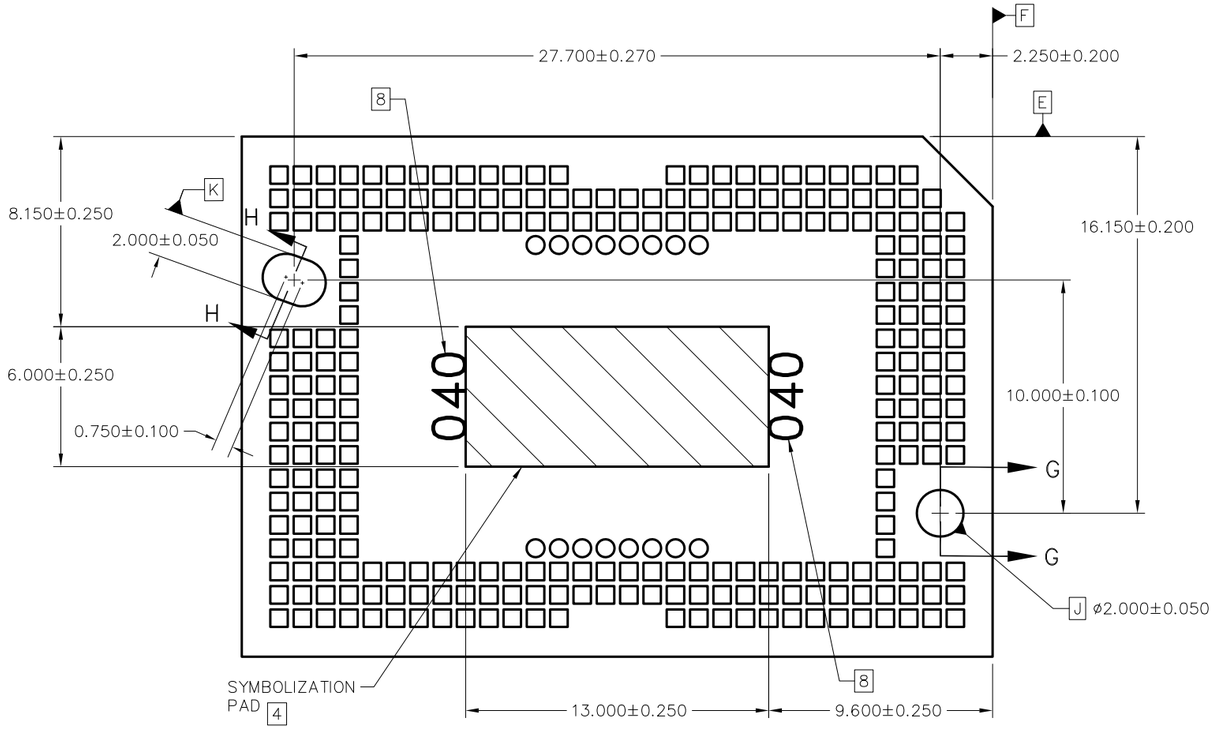


VIEW F–F (SHEET 1)
DATUMS J AND K, SYMBOLIZATION PAD
SCALE 8/1

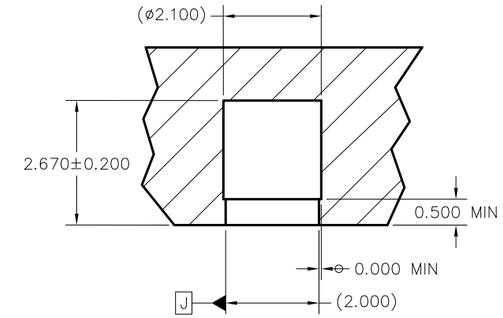


SECTION G–G
DATUM J
SCALE 16/1

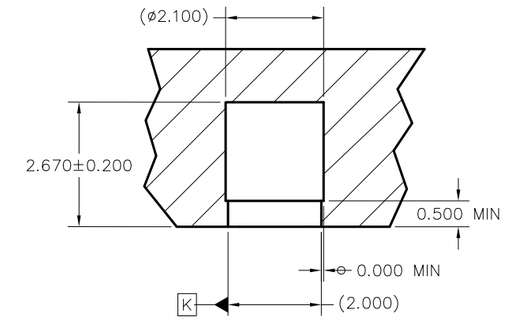


SECTION H–H
DATUM K
SCALE 16/1

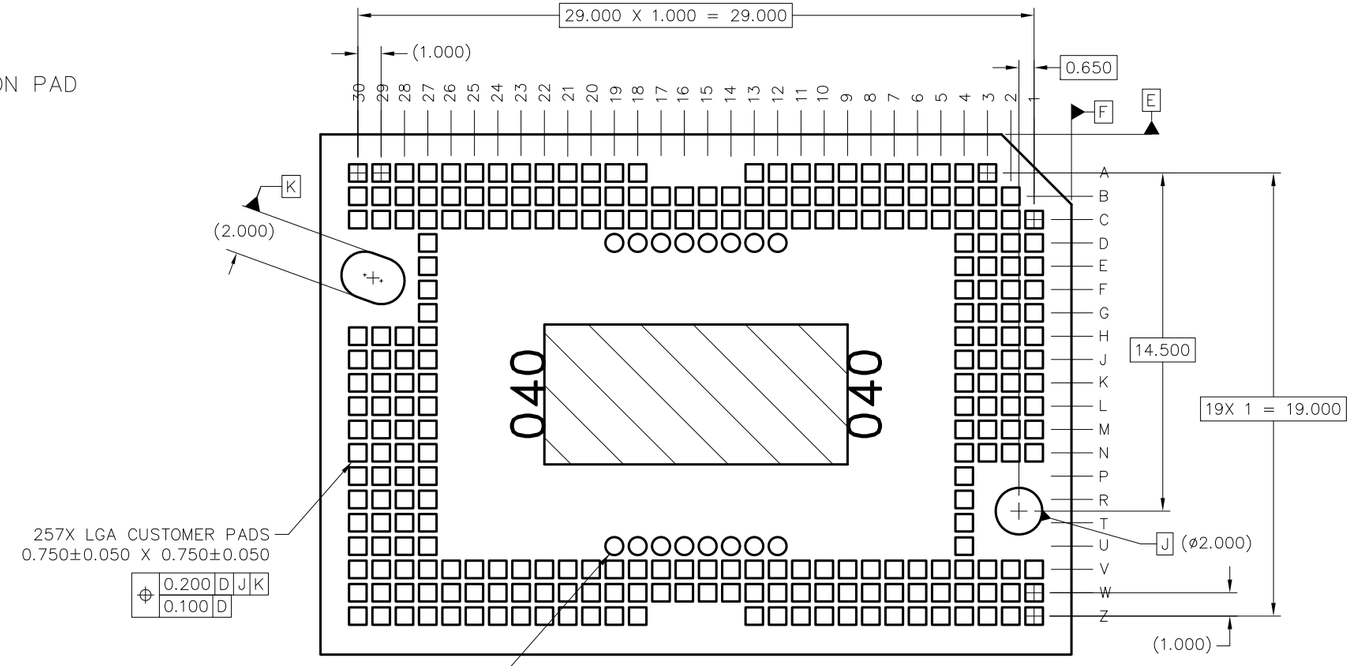


VIEW J–J (SHEET 1)
LGA PADS
SCALE 8/1

| | | | |
|---|---|---|---|
| TEXAS INSTRUMENTS Dallas, Texas | DWN DATE / ISSUE DATE | SIZE B / SCALE 4/1 | DRAWING NO 2516206 / SHEET 4 | REV A |

ACED2c

# IMPORTANT NOTICE AND DISCLAIMER

TI PROVIDES TECHNICAL AND RELIABILITY DATA (INCLUDING DATASHEETS), DESIGN RESOURCES (INCLUDING REFERENCE DESIGNS), APPLICATION OR OTHER DESIGN ADVICE, WEB TOOLS, SAFETY INFORMATION, AND OTHER RESOURCES “AS IS” AND WITH ALL FAULTS, AND DISCLAIMS ALL WARRANTIES, EXPRESS AND IMPLIED, INCLUDING WITHOUT LIMITATION ANY IMPLIED WARRANTIES OF MERCHANTABILITY, FITNESS FOR A PARTICULAR PURPOSE OR NON-INFRINGEMENT OF THIRD PARTY INTELLECTUAL PROPERTY RIGHTS.

These resources are intended for skilled developers designing with TI products. You are solely responsible for (1) selecting the appropriate TI products for your application, (2) designing, validating and testing your application, and (3) ensuring your application meets applicable standards, and any other safety, security, regulatory or other requirements.

These resources are subject to change without notice. TI grants you permission to use these resources only for development of an application that uses the TI products described in the resource. Other reproduction and display of these resources is prohibited. No license is granted to any other TI intellectual property right or to any third party intellectual property right. TI disclaims responsibility for, and you fully indemnify TI and its representatives against any claims, damages, costs, losses, and liabilities arising out of your use of these resources.

TI’s products are provided subject to TI’s Terms of Sale, TI’s General Quality Guidelines, or other applicable terms available either on ti.com or provided in conjunction with such TI products. TI’s provision of these resources does not expand or otherwise alter TI’s applicable warranties or warranty disclaimers for TI products. Unless TI explicitly designates a product as custom or customer-specified, TI products are standard, catalog, general purpose devices.

TI objects to and rejects any additional or different terms you may propose.

Copyright © 2026, Texas Instruments Incorporated

Last updated 10/2025