Features

- MPEG I/II-Layer 3 Hardwired Decoder
  - Stand-alone MP3 Decoder
  - 48, 44.1, 32, 24, 22.05, 16 kHz Sampling Frequency
  - Separated Digital Volume Control on Left and Right Channels (Software Control using 31 Steps)
  - Bass, Medium, and Treble Control (31 Steps)
  - Bass Boost Sound Effect
  - Ancillary Data Extraction
  - CRC Error and MPEG Frame Synchronization Indicators
- Programmable Audio Output for Interfacing with Common Audio DAC
  - PCM Format Compatible
  - I^2S Format Compatible
- 8-bit MCU C51 Core Based (F_{MAX} = 20 MHz)
- 2304 Bytes of Internal RAM
- 64K Bytes of Code Memory
  - AT89C51SND1C: Flash (100K Erase/Write Cycles)
  - AT83SND1C: ROM
- 4K Bytes of Boot Flash Memory (AT89C51SND1C)
  - ISP: Download from USB (standard) or UART (option)
- External Code Memory
  - AT80C51SND1C: ROMless
- USB Rev 1.1 Controller
  - Full Speed Data Transmission
- Built-in PLL
  - MP3 Audio Clocks
  - USB Clock
- MultiMedia Card® Interface Compatibility
- Atmel DataFlash® SPI Interface Compatibility
- IDE/ATAPI Interface
- 2 Channels 10-bit ADC, 8 kHz (8-true bit)
  - Battery Voltage Monitoring
  - Voice Recording Controlled by Software
- Up to 44 Bits of General-purpose I/Os
  - 4-bit Interrupt Keyboard Port for a 4 x n Matrix
  - SmartMedia® Software Interface
- 2 Standard 16-bit Timers/Counters
- Hardware Watchdog Timer
- Standard Full Duplex UART with Baud Rate Generator
- Two Wire Master and Slave Modes Controller
- SPI Master and Slave Modes Controller
- Power Management
  - Power-on Reset
  - Software Programmable MCU Clock
  - Idle Mode, Power-down Mode
- Operating Conditions:
  - 3V, ±10%, 25 mA Typical Operating at 25°C
  - Temperature Range: -40°C to +85°C
- Packages
  - TQFP80, BGA81, PLCC84 (Development Board)
  - Dice

Single-Chip Flash Microcontroller with MP3 Decoder and Human Interface

AT83SND1C
AT89C51SND1C
AT80C51SND1C

4109LS–8051–02/08

1. Description

The AT8xC51SND1C are fully integrated stand-alone hardwired MPEG I/II-Layer 3 decoder with a C51 microcontroller core handling data flow and MP3-player control.

The AT89C51SND1C includes 64K Bytes of Flash memory and allows In-System Programming through an embedded 4K Bytes of Boot Flash memory.

The AT83SND1C includes 64K Bytes of ROM memory.

The AT80C51SND1C does not include any code memory.

The AT8xC51SND1C include 2304 Bytes of RAM memory.

The AT8xC51SND1C provides the necessary features for human interface like timers, keyboard port, serial or parallel interface (USB, TWI, SPI, IDE), ADC input, I^2S output, and all external memory interface (NAND or NOR Flash, SmartMedia, MultiMedia, DataFlash cards).

2. Typical Applications

- MP3-Player
- PDA, Camera, Mobile Phone MP3
- Car Audio/Multimedia MP3
- Home Audio/Multimedia MP3

3. Block Diagram

Figure 3-1. AT8xC51SND1C Block Diagram

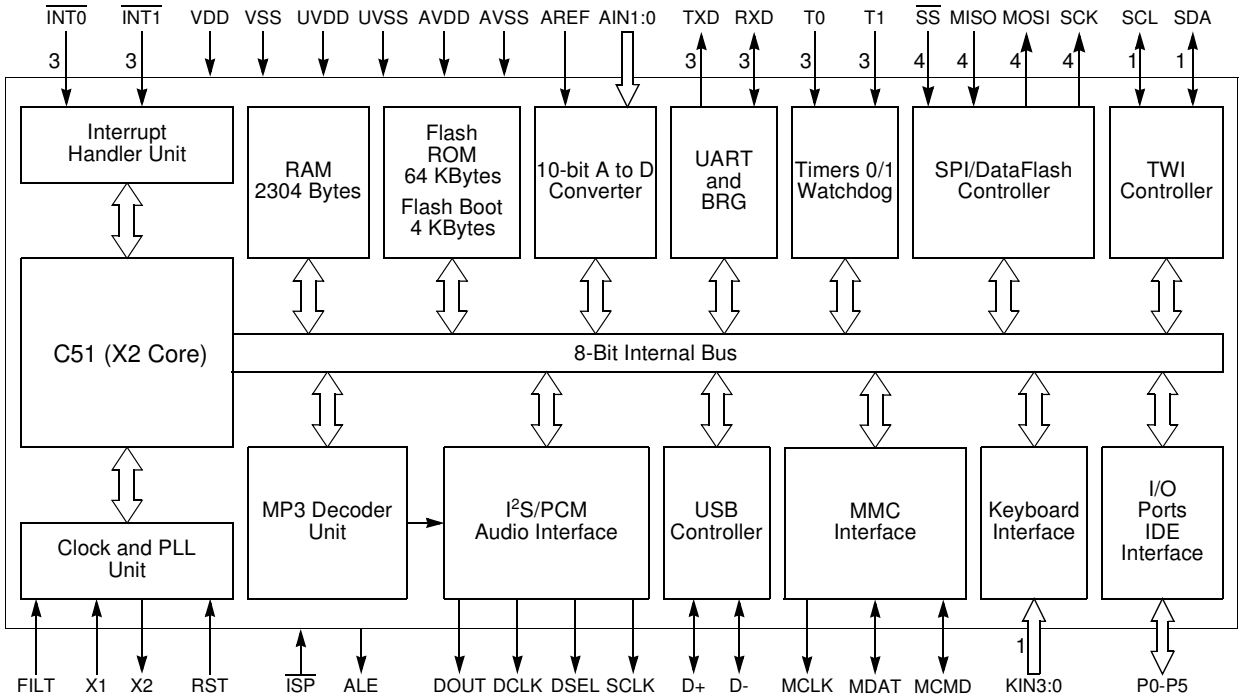

1 Alternate function of Port 1
3 Alternate function of Port 3
4 Alternate function of Port 4

4. Pin Description

4.1 Pinouts

Figure 4-1. AT8xC51SND1C 80-pin QFP Package

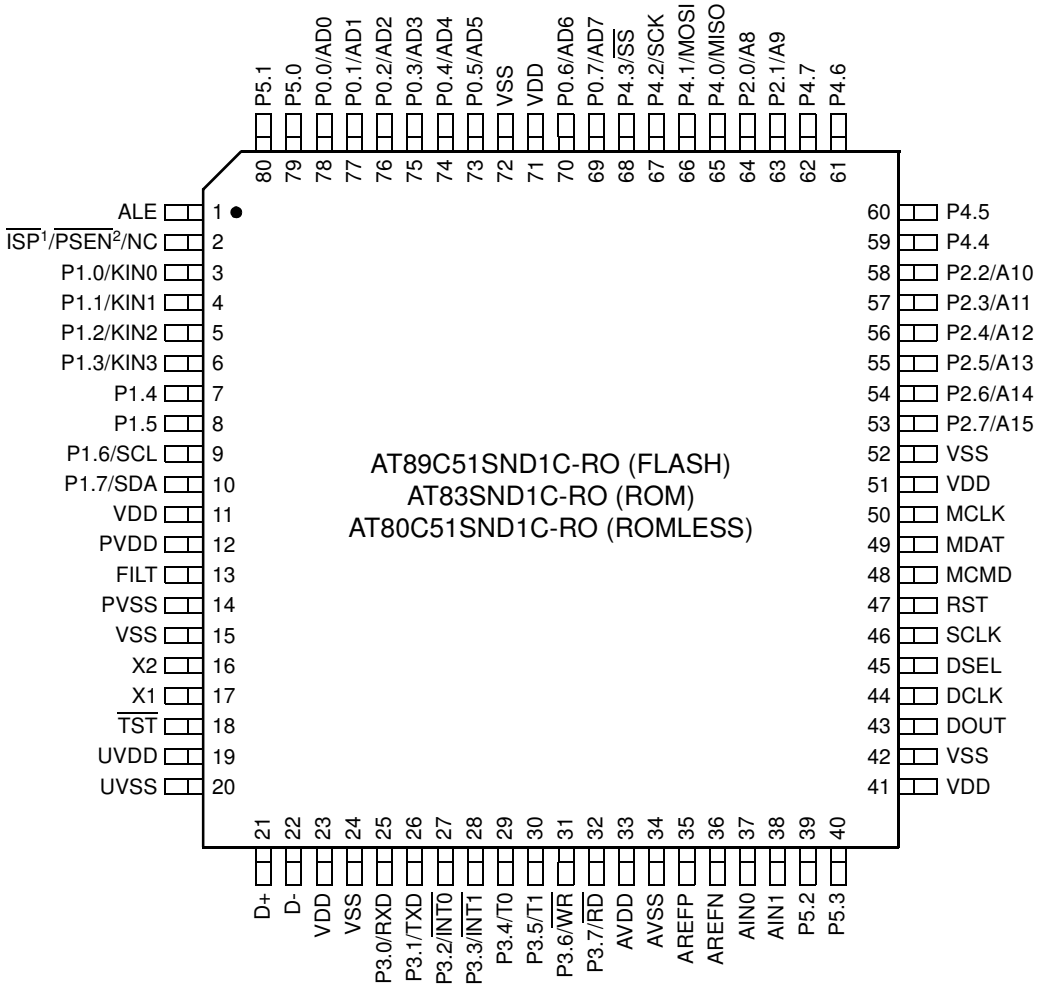

Notes: 1. ISP pin is only available in AT89C51SND1C product.
Do not connect this pin on AT83SND1C product.
2. PSEN pin is only available in AT80C51SND1C product.

Figure 4-2. AT8xC51SND1C 81-pin BGA Package

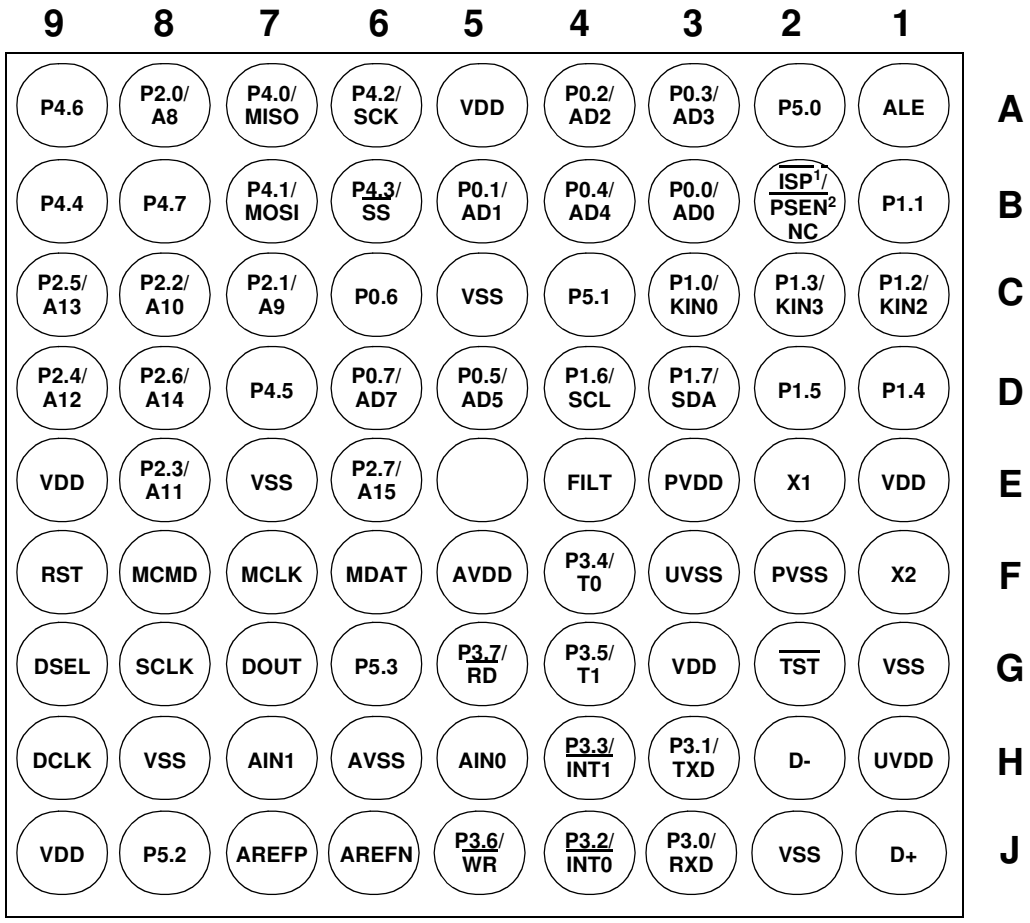

Notes: 1. $\overline{\text{ISP}}$ pin is only available in AT89C51SND1C product.
Do not connect this pin on AT83SND1C and AT80C51SND1C product.
2. $\overline{\text{PSEN}}$ pin is only available in AT80C51SND1C product.

Figure 4-3. AT8xC51SND1C 84-pin PLCC Package

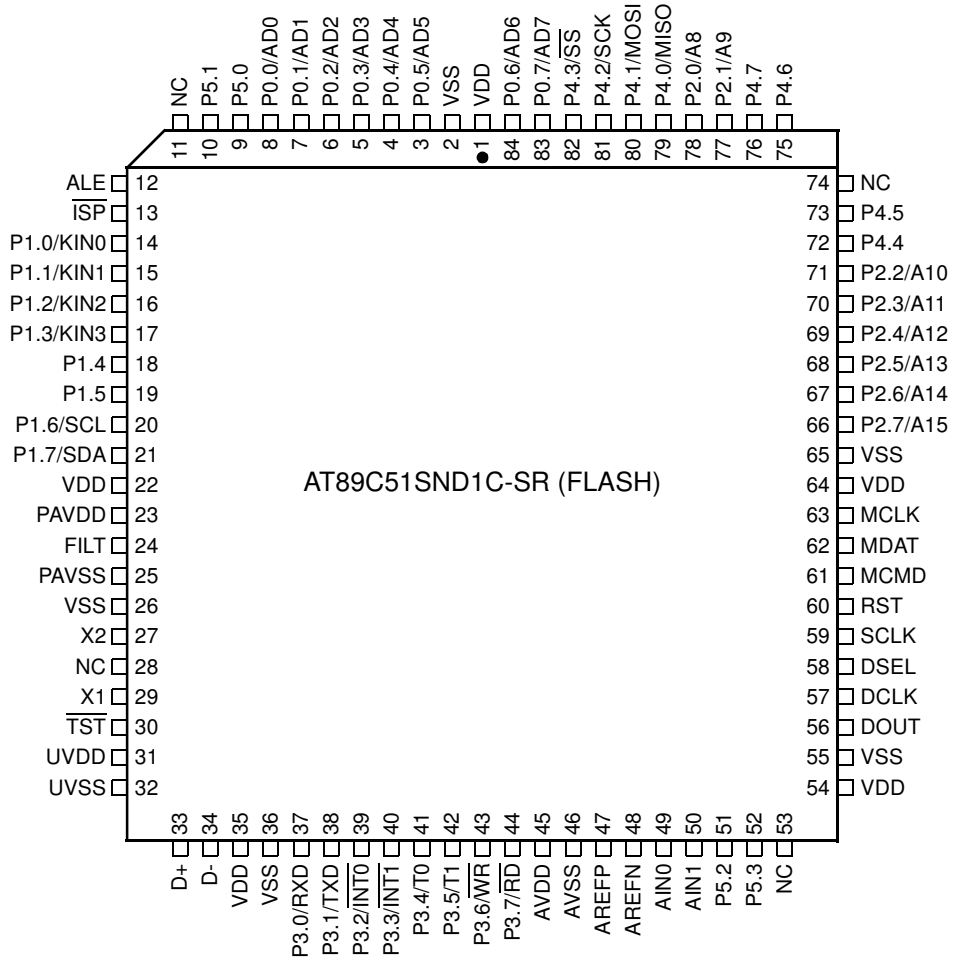

4.2 Signals

All the AT8xC51SND1C signals are detailed by functionality in Table 1 to Table 14.

Table 1. Ports Signal Description

Signal Name	Type	Description	Alternate Function
P0.7:0	I/O	**Port 0** P0 is an 8-bit open-drain bidirectional I/O port. Port 0 pins that have 1s written to them float and can be used as high impedance inputs. To avoid any parasitic current consumption, floating P0 inputs must be polarized to V_{DD} or V_{SS}.	AD7:0
P1.7:0	I/O	**Port 1** P1 is an 8-bit bidirectional I/O port with internal pull-ups.	KIN3:0 SCL SDA
P2.7:0	I/O	**Port 2** P2 is an 8-bit bidirectional I/O port with internal pull-ups.	A15:8

Signal Name	Type	Description	Alternate Function
P3.7:0	I/O	**Port 3** P3 is an 8-bit bidirectional I/O port with internal pull-ups.	RXD TXD $\overline{INT0}$ INT1 T0 T1 $\overline{WR}$ $\overline{RD}$
P4.7:0	I/O	**Port 4** P4 is an 8-bit bidirectional I/O port with internal pull-ups.	MISO MOSI SCK $\overline{SS}$
P5.3:0	I/O	**Port 5** P5 is a 4-bit bidirectional I/O port with internal pull-ups.	-

Table 2. Clock Signal Description

Signal Name	Type	Description	Alternate Function
X1	I	**Input to the on-chip inverting oscillator amplifier** To use the internal oscillator, a crystal/resonator circuit is connected to this pin. If an external oscillator is used, its output is connected to this pin. X1 is the clock source for internal timing.	-
X2	O	**Output of the on-chip inverting oscillator amplifier** To use the internal oscillator, a crystal/resonator circuit is connected to this pin. If an external oscillator is used, leave X2 unconnected.	-
FILT	I	**PLL Low Pass Filter input** FILT receives the RC network of the PLL low pass filter.	-

Table 3. Timer 0 and Timer 1 Signal Description

Signal Name	Type	Description	Alternate Function
$\overline{INT0}$	I	**Timer 0 Gate Input** $\overline{INT0}$ serves as external run control for timer 0, when selected by GATE0 bit in TCON register. **External Interrupt 0** $\overline{INT0}$ input sets IE0 in the TCON register. If bit IT0 in this register is set, bit IE0 is set by a falling edge on $\overline{INT0}$. If bit IT0 is cleared, bit IE0 is set by a low level on $\overline{INT0}$.	P3.2
$\overline{INT1}$	I	**Timer 1 Gate Input** $\overline{INT1}$ serves as external run control for timer 1, when selected by GATE1 bit in TCON register. **External Interrupt 1** $\overline{INT1}$ input sets IE1 in the TCON register. If bit IT1 in this register is set, bit IE1 is set by a falling edge on $\overline{INT1}$. If bit IT1 is cleared, bit IE1 is set by a low level on $\overline{INT1}$.	P3.3

Signal Name	Type	Description	Alternate Function
T0	I	**Timer 0 External Clock Input** When timer 0 operates as a counter, a falling edge on the T0 pin increments the count.	P3.4
T1	I	**Timer 1 External Clock Input** When timer 1 operates as a counter, a falling edge on the T1 pin increments the count.	P3.5

Table 4. Audio Interface Signal Description

Signal Name	Type	Description	Alternate Function
DCLK	O	**DAC Data Bit Clock**	-
DOUT	O	**DAC Audio Data**	-
DSEL	O	**DAC Channel Select Signal** DSEL is the sample rate clock output.	-
SCLK	O	**DAC System Clock** SCLK is the oversampling clock synchronized to the digital audio data (DOUT) and the channel selection signal (DSEL).	-

Table 5. USB Controller Signal Description

Signal Name	Type	Description	Alternate Function
D+	I/O	**USB Positive Data Upstream Port** This pin requires an external 1.5 KΩ pull-up to V_{DD} for full speed operation.	-
D-	I/O	**USB Negative Data Upstream Port**	-

Table 6. MutiMediaCard Interface Signal Description

Signal Name	Type	Description	Alternate Function
MCLK	O	**MMC Clock output** Data or command clock transfer.	-
MCMD	I/O	**MMC Command line** Bidirectional command channel used for card initialization and data transfer commands. To avoid any parasitic current consumption, unused MCMD input must be polarized to V_{DD} or V_{SS}.	-
MDAT	I/O	**MMC Data line** Bidirectional data channel. To avoid any parasitic current consumption, unused MDAT input must be polarized to V_{DD} or V_{SS}.	-

Table 7. UART Signal Description

Signal Name	Type	Description	Alternate Function
RXD	I/O	**Receive Serial Data** RXD sends and receives data in serial I/O mode 0 and receives data in serial I/O modes 1, 2 and 3.	P3.0
TXD	O	**Transmit Serial Data** TXD outputs the shift clock in serial I/O mode 0 and transmits data in serial I/O modes 1, 2 and 3.	P3.1

Table 8. SPI Controller Signal Description

Signal Name	Type	Description	Alternate Function
MISO	I/O	**SPI Master Input Slave Output Data Line** When in master mode, MISO receives data from the slave peripheral. When in slave mode, MISO outputs data to the master controller.	P4.0
MOSI	I/O	**SPI Master Output Slave Input Data Line** When in master mode, MOSI outputs data to the slave peripheral. When in slave mode, MOSI receives data from the master controller.	P4.1
SCK	I/O	**SPI Clock Line** When in master mode, SCK outputs clock to the slave peripheral. When in slave mode, SCK receives clock from the master controller.	P4.2
$\overline{SS}$	I	**SPI Slave Select Line** When in controlled slave mode, $\overline{SS}$ enables the slave mode.	P4.3

Table 9. TWI Controller Signal Description

Signal Name	Type	Description	Alternate Function
SCL	I/O	**TWI Serial Clock** When TWI controller is in master mode, SCL outputs the serial clock to the slave peripherals. When TWI controller is in slave mode, SCL receives clock from the master controller.	P1.6
SDA	I/O	**TWI Serial Data** SDA is the bidirectional Two Wire data line.	P1.7

Table 10. A/D Converter Signal Description

Signal Name	Type	Description	Alternate Function
AIN1:0	I	**A/D Converter Analog Inputs**	-
AREFP	I	**Analog Positive Voltage Reference Input**	-
AREFN	I	**Analog Negative Voltage Reference Input** This pin is internally connected to AVSS.	-

Table 11. Keypad Interface Signal Description

Signal Name	Type	Description	Alternate Function
KIN3:0	I	**Keypad Input Lines** Holding one of these pins high or low for 24 oscillator periods triggers a keypad interrupt.	P1.3:0

Table 12. External Access Signal Description

Signal Name	Type	Description	Alternate Function
A15:8	I/O	**Address Lines** Upper address lines for the external bus. Multiplexed higher address and data lines for the IDE interface.	P2.7:0
AD7:0	I/O	**Address/Data Lines** Multiplexed lower address and data lines for the external memory or the IDE interface.	P0.7:0
ALE	O	**Address Latch Enable Output** ALE signals the start of an external bus cycle and indicates that valid address information is available on lines A7:0. An external latch is used to demultiplex the address from address/data bus.	-
$\overline{PSEN}$	I/O	**Program Store Enable Output (AT80C51SND1C Only)** This signal is active low during external code fetch or external code read (MOVC instruction).	-
$\overline{ISP}$	I/O	**ISP Enable Input (AT89C51SND1C Only)** This signal must be held to GND through a pull-down resistor at the falling reset to force execution of the internal bootloader.	-
$\overline{RD}$	O	**Read Signal** Read signal asserted during external data memory read operation.	P3.7
$\overline{WR}$	O	**Write Signal** Write signal asserted during external data memory write operation.	P3.6
$\overline{EA}^{(1)(2)}$	I	**External Access Enable (Dice Only)** $\overline{EA}$ must be externally held low to enable the device to fetch code from external program memory locations 0000h to FFFFh.	-

Notes: 1. For ROM/Flash Dice product versions: pad $\overline{EA}$ must be connected to VCC.
2. For ROMless Dice product versions: pad $\overline{EA}$ must be connected to VSS.

Table 13. System Signal Description

Signal Name	Type	Description	Alternate Function
RST	I	**Reset Input** Holding this pin high for 64 oscillator periods while the oscillator is running resets the device. The Port pins are driven to their reset conditions when a voltage lower than V_{IL} is applied, whether or not the oscillator is running. This pin has an internal pull-down resistor which allows the device to be reset by connecting a capacitor between this pin and V_{DD}. Asserting RST when the chip is in Idle mode or Power-Down mode returns the chip to normal operation.	-
$\overline{TST}$	I	**Test Input** Test mode entry signal. This pin must be set to V_{DD}.	-

Table 14. Power Signal Description

Signal Name	Type	Description	Alternate Function
VDD	PWR	**Digital Supply Voltage** Connect these pins to +3V supply voltage.	-
VSS	GND	**Circuit Ground** Connect these pins to ground.	-
AVDD	PWR	**Analog Supply Voltage** Connect this pin to +3V supply voltage.	-
AVSS	GND	**Analog Ground** Connect this pin to ground.	-
PVDD	PWR	**PLL Supply voltage** Connect this pin to +3V supply voltage.	-
PVSS	GND	**PLL Circuit Ground** Connect this pin to ground.	-
UVDD	PWR	**USB Supply Voltage** Connect this pin to +3V supply voltage.	-
UVSS	GND	**USB Ground** Connect this pin to ground.	-

4.3 Internal Pin Structure

Table 15. Detailed Internal Pin Structure

Circuit[1]	Type	Pins
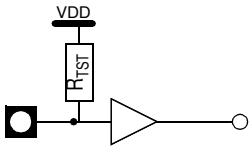	Input	$\overline{TST}$
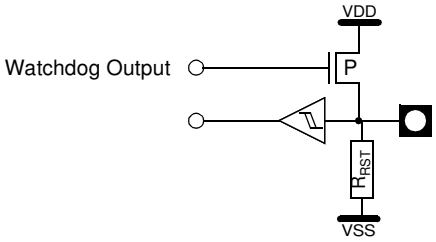	Input/Output	RST
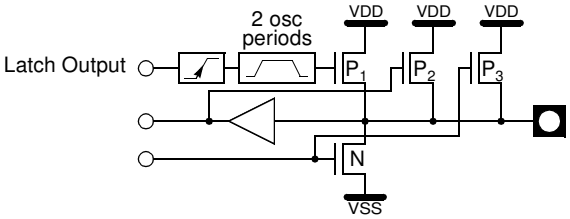	Input/Output	P1[2] P2[3] P3 P4 P53:0
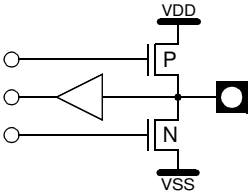	Input/Output	P0 MCMD MDAT $\overline{ISP}$ $\overline{PSEN}$
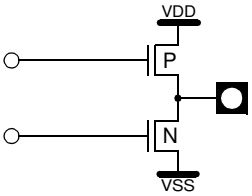	Output	ALE SCLK DCLK DOUT DSEL MCLK
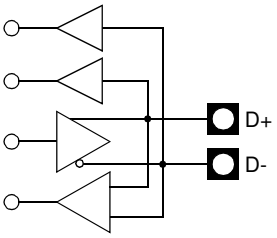	Input/Output	D+ D-

Notes:
1. For information on resistors value, input/output levels, and drive capability, refer to the Section “DC Characteristics”, page 18.
2. When the Two Wire controller is enabled, P_1, P_2, and P_3 transistors are disabled allowing pseudo open-drain structure.
3. In Port 2, P_1 transistor is continuously driven when outputting a high level bit address (A15:8).

5. Application Information

Figure 5-1. AT8xC51SND1C Typical Application with On-Board Atmel DataFlash and 2-wire LCD

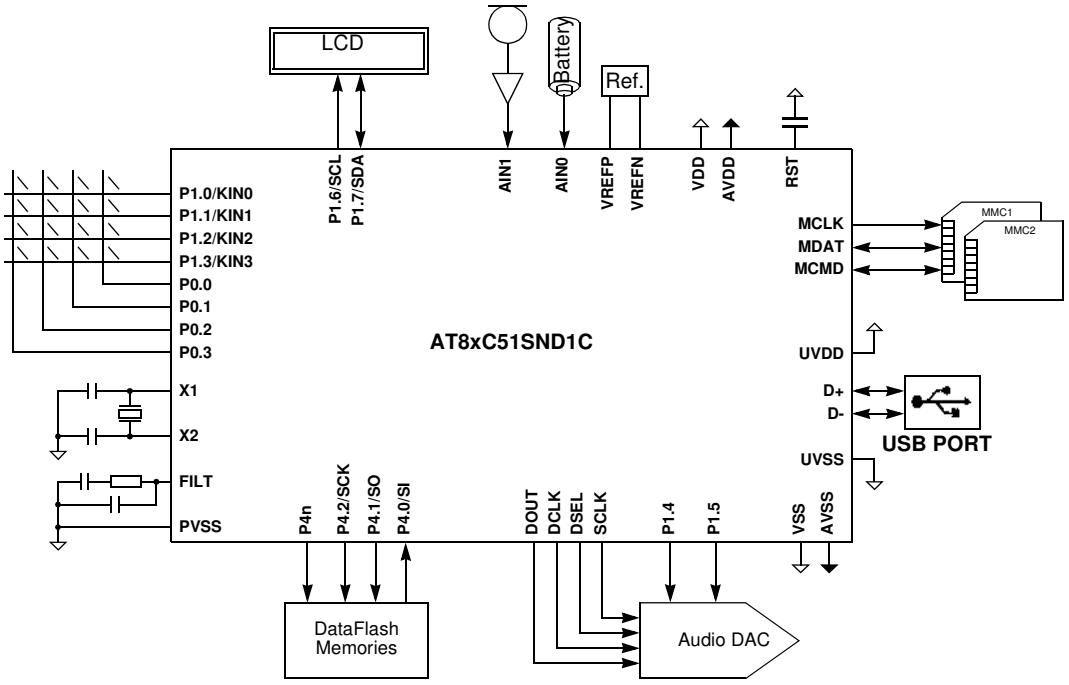

Figure 5-2. AT8xC51SND1C Typical Application with On-Board Atmel DataFlash and // LCD

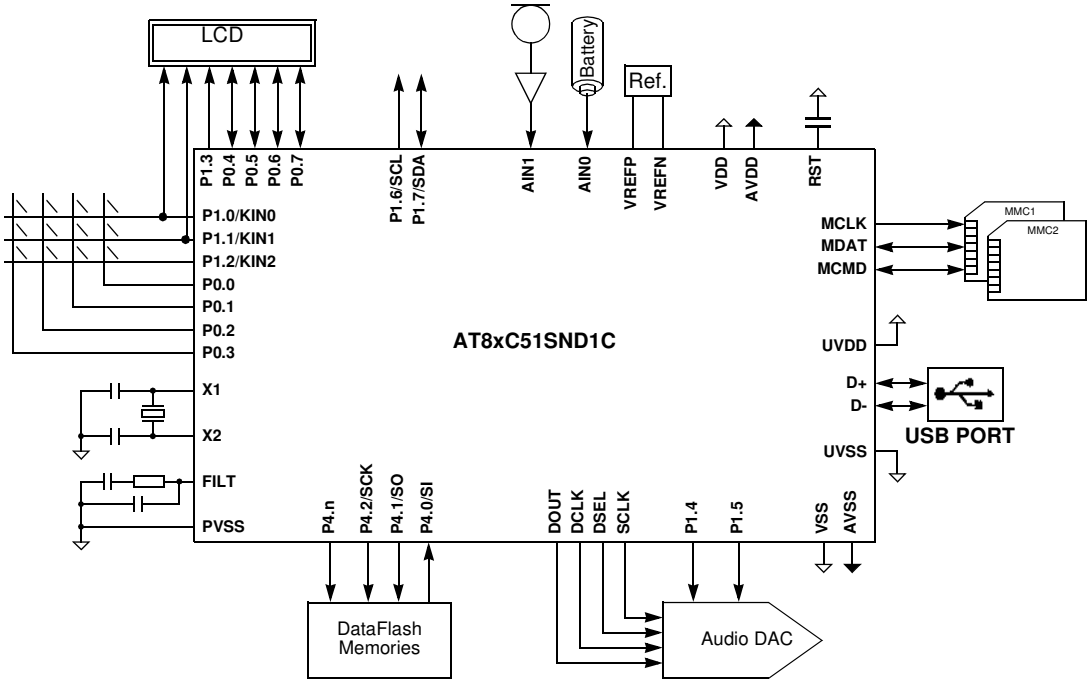

Figure 5-3. AT8xC51SND1C Typical Application with On-Board SSFDC Flash

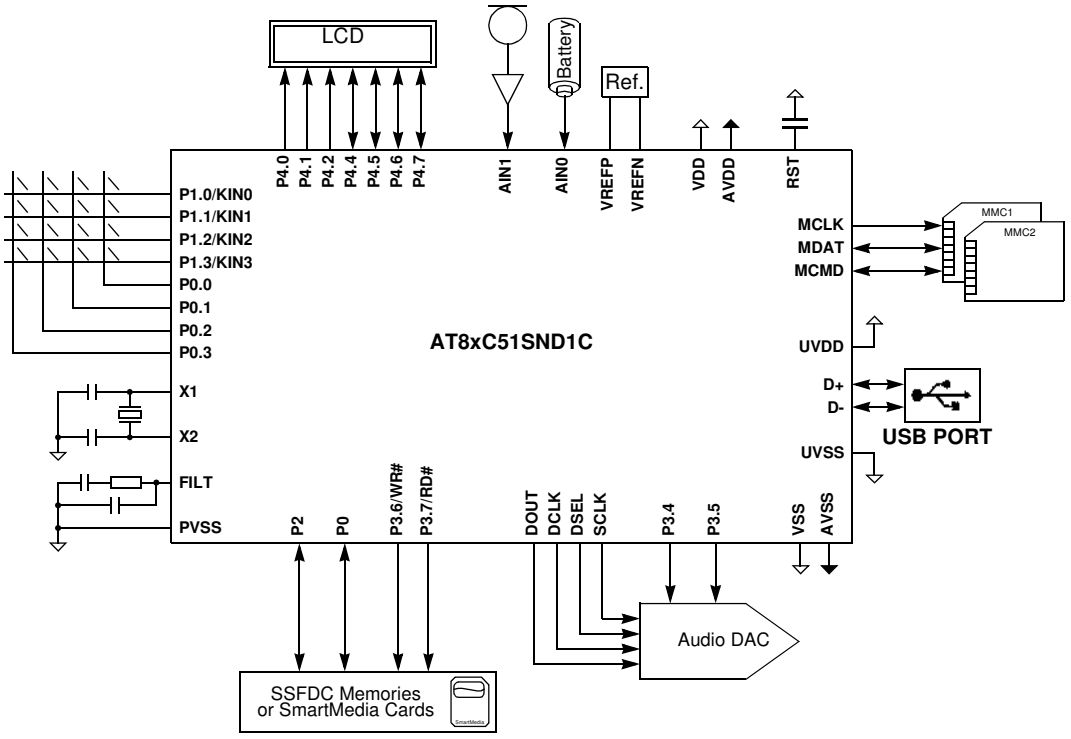

Figure 5-4. AT8xC51SND1C Typical Application with IDE CD-ROM Drive

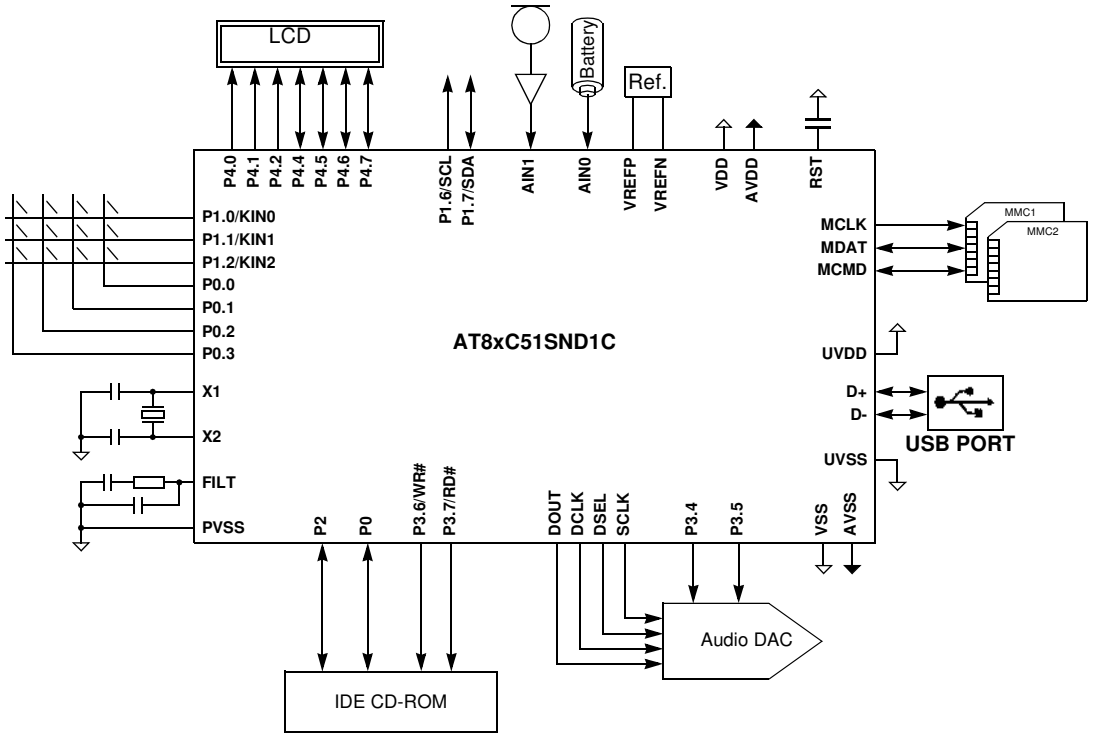

6. Peripherals

The AT8xC51SND1C peripherals are briefly described in the following sections. For further details on how to interface (hardware and software) to these peripherals, please refer to the AT8xC51SND1C design guide.

6.1 Clock Generator System

The AT8xC51SND1C internal clocks are extracted from an on-chip PLL fed by an on-chip oscillator. Four clocks are generated respectively for the C51 core, the MP3 decoder, the audio interface, and the other peripherals. The C51 and peripheral clocks are derived from the oscillator clock. The MP3 decoder clock is generated by dividing the PLL output clock. The audio interface sample rates are also obtained by dividing the PLL output clock.

6.2 Ports

The AT8xC51SND1C implements five 8-bit ports (P0 to P4) and one 4-bit port (P5). In addition to performing general-purpose I/O, some ports are capable of external data memory operations; others allow for alternate functions. All I/O Ports are bidirectional. Each Port contains a latch, an output driver and an input buffer. Port 0 and Port 2 output drivers and input buffers facilitate external memory operations. Some Port 1, Port 3 and Port 4 pins serve for both general-purpose I/O and alternate functions.

6.3 Timers/Counters

The AT8xC51SND1C implements the two general-purpose, 16-bit Timers/Counters of a standard C51. They are identified as Timer 0, Timer 1, and can independently be configured each to operate in a variety of modes as a Timer or as an event Counter. When operating as a Timer, a Timer/Counter runs for a programmed length of time, then issues an interrupt request. When operating as a Counter, a Timer/Counter counts negative transitions on an external pin. After a preset number of counts, the Counter issues an interrupt request.

6.4 Watchdog Timer

The AT8xC51SND1C implements a hardware Watchdog Timer that automatically resets the chip if it is allowed to time out. The WDT provides a means of recovering from routines that do not complete successfully due to software or hardware malfunctions.

6.5 MP3 Decoder

The AT8xC51SND1C implements a MPEG I/II audio layer 3 decoder (known as MP3 decoder).
In MPEG I (ISO 11172-3) three layers of compression have been standardized supporting three sampling frequencies: 48, 44.1, and 32 KHz. Among these layers, layer 3 allows highest compression rate of about 12:1 while still maintaining CD audio quality. For example, 3 minutes of CD audio (16-bit PCM, 44.1 KHz) data, which needs about 32 MBytes of storage, can be encoded into only 2.7 MBytes of MPEG I audio layer 3 data.
In MPEG II (ISO 13818-3), three additional sampling frequencies: 24, 22.05, and 16 KHz are supported for low bit rates applications.
The AT8xC51SND1C can decode in real-time the MPEG I audio layer 3 encoded data into a PCM audio data, and also supports MPEG II audio layer 3 additional frequencies.

Additional features are supported by the AT8xC51SND1C MP3 decoder such as volume, bass, medium, and treble controls, bass boost effect and ancillary data extraction.

6.6 Audio Output Interface

The AT8xC51SND1C implements an audio output interface allowing the decoded audio bit-stream to be output in various formats. It is compatible with right and left justification PCM and I^2S formats and thanks to the on-chip PLL (see Section 6.1) allows connection of almost all of the commercial audio DAC families available on the market.

6.7 Universal Serial Bus Interface

The AT8xC51SND1C implements a full speed Universal Serial Bus Interface. It can be used for the following purposes:

- Download of MP3 encoded audio files by supporting the USB mass storage class.
- In System Programming by supporting the USB firmware upgrade class.

6.8 MultiMediaCard Interface

The AT8xC51SND1C implements a MultiMediaCard (MMC) interface compliant to the V2.2 specification in MultiMediaCard Mode. The MMC allows storage of MP3 encoded audio files in removable flash memory cards that can be easily plugged or removed from the application. It can also be used for In System Programming.

6.9 IDE/ATAPI interface

The AT8xC51SND1C provides an IDE/ATAPI interface allowing connexion of devices such as CD-ROM reader, CompactFlash cards, Hard Disk Drive… It consists in a 16-bit bidirectional bus part of the low-level ANSI ATA/ATAPI specification. It is provided for mass storage interface but could be used for In System Programming using CD-ROM.

6.10 Serial I/O Interface

The AT8xC51SND1C implements a serial port with its own baud rate generator providing one single synchronous communication mode and three full-duplex Universal Asynchronous Receiver Transmitter (UART) communication modes. It is provided for the following purposes:

- In System Programming.
- Remote control of the AT8xC51SND1C by a host.

6.11 Serial Peripheral Interface

The AT8xC51SND1C implements a Serial Peripheral Interface (SPI) supporting master and slave modes. It is provided for the following purposes:

- Interfacing DataFlash memory for MP3 encoded audio files storage.
- Remote control of the AT8xC51SND1C by a host.
- In System Programming.

6.12 2-wire Controller

The AT8xC51SND1C implements a 2-wire controller supporting the four standard master and slave modes with multimaster capability. It is provided for the following purposes:

- Connection of slave devices like LCD controller, audio DAC…
- Remote control of the AT8xC51SND1C by a host.
- In System Programming.

6.13 A/D Controller

The AT8xC51SND1C implements a 2-channel 10-bit (8 true bits) analog to digital converter (ADC). It is provided for the following purposes:

- Battery monitoring.
- Voice recording.
- Corded remote control.

6.14 Keyboard Interface

The AT8xC51SND1C implements a keyboard interface allowing connection of 4 x n matrix keyboard. It is based on 4 inputs with programmable interrupt capability on both high or low level. These inputs are available as alternate function of P1.3:0 and allow exit from idle and power down modes.

7. Electrical Characteristics

7.1 Absolute Maximum Rating

Storage Temperature ..... -65 to +150°C Voltage on any other Pin to V_{SS} ..... -0.3 to +4.0 V I_{OL} per I/O Pin ..... 5 mA Power Dissipation ..... 1 W Operating Conditions Ambient Temperature Under Bias..... -40 to +85°C V_{DD} 4.0V	*NOTICE: Stressing the device beyond the “Absolute Maximum Ratings” may cause permanent damage. These are stress ratings only. Operation beyond the “operating conditions” is not recommended and extended exposure beyond the “Operating Conditions” may affect device reliability.

7.2 DC Characteristics

7.2.1 Digital Logic

Table 16. Digital DC Characteristics
V_{DD} = 2.7 to 3.3 V, T_A = -40 to +85°C

Symbol	Parameter	Min	Typ(1)	Max	Units	Test Conditions
V_{IL}	Input Low Voltage	-0.5		$0.2 \cdot V_{DD}$ - 0.1	V	
V_{IH1}(2)	Input High Voltage (except RST, X1)	$0.2 \cdot V_{DD}$ + 1.1		V_{DD}	V	
V_{IH2}	Input High Voltage (RST, X1)	$0.7 \cdot V_{DD}$		V_{DD} + 0.5	V	
V_{OL1}	Output Low Voltage (except P0, ALE, MCMD, MDAT, MCLK, SCLK, DCLK, DSEL, DOUT)			0.45	V	I_{OL}= 1.6 mA
V_{OL2}	Output Low Voltage (P0, ALE, MCMD, MDAT, MCLK, SCLK, DCLK, DSEL, DOUT)			0.45	V	I_{OL}= 3.2 mA
V_{OH1}	Output High Voltage (P1, P2, P3, P4 and P5)	V_{DD} - 0.7			V	I_{OH}= -30 µA
V_{OH2}	Output High Voltage (P0, P2 address mode, ALE, MCMD, MDAT, MCLK, SCLK, DCLK, DSEL, DOUT, D+, D-)	V_{DD} - 0.7			V	I_{OH}= -3.2 mA
I_{IL}	Logical 0 Input Current (P1, P2, P3, P4 and P5)			-50	µA	V_{IN}= 0.45 V
I_{LI}	Input Leakage Current (P0, ALE, MCMD, MDAT, MCLK, SCLK, DCLK, DSEL, DOUT)			10	µA	0.45< V_{IN}< V_{DD}
I_{TL}	Logical 1 to 0 Transition Current (P1, P2, P3, P4 and P5)			-650	µA	V_{IN}= 2.0 V
R_{RST}	Pull-Down Resistor	50	90	200	kΩ	
C_{IO}	Pin Capacitance		10		pF	T_A= 25°C
V_{RET}	V_{DD} Data Retention Limit			1.8	V	

Table 16. Digital DC Characteristics
V_{DD} = 2.7 to 3.3 V, T_A = -40 to +85°C

Symbol	Parameter	Min	Typ(1)	Max	Units	Test Conditions
I_{DD}	AT89C51SND1C Operating Current		(3)	X1 / X2 mode 6.5 / 10.5 8 / 13.5 9.5 / 17	mA	V_{DD} < 3.3 V 12 MHz 16 MHz 20 MHz
	AT83SND1C Operating Current			X1 / X2 mode 6.5 / 10.5 8 / 13.5 9.5 / 17	mA	V_{DD} < 3.3 V 12 MHz 16 MHz 20 MHz
	AT80C51SND1C Idle Mode Current			X1 / X2 mode 6.5 / 10.5 8 / 13.5 9.5 / 17	mA	V_{DD} < 3.3 V 12 MHz 16 MHz 20 MHz
I_{DL}	AT89C51SND1C Idle Mode Current		(3)	X1 / X2 mode 5.3 / 8.1 6.4 / 10.3 7.5 / 13	mA	V_{DD} < 3.3 V 12 MHz 16 MHz 20 MHz
	AT83SND1C Idle Mode Current			X1 / X2 mode 5.3 / 8.1 6.4 / 10.3 7.5 / 13	mA	V_{DD} < 3.3 V 12 MHz 16 MHz 20 MHz
	AT80C51SND1C Idle Mode Current			X1 / X2 mode 5.3 / 8.1 6.4 / 10.3 7.5 / 13	mA	V_{DD} < 3.3 V 12 MHz 16 MHz 20 MHz
I_{PD}	AT89C51SND1C Power-Down Mode Current		20	500	µA	V_{RET} < V_{DD} < 3.3 V
	AT83SND1C Power-Down Mode Current		20	500	µA	V_{RET} < V_{DD} < 3.3 V
	AT80C51SND1C Power-Down Mode Current		20	500	µA	V_{RET} < V_{DD} < 3.3 V
I_{FP}	AT89C51SND1C Flash Programming Current			15	mA	V_{DD} < 3.3 V

Notes:
1. Typical values are obtained using V_{DD}= 3 V and T_A= 25°C. They are not tested and there is no guarantee on these values.
2. Flash retention is guaranteed with the same formula for V_{DD} min down to 0V.
3. See Table 17 for typical consumption in player mode.

Table 17. Typical Reference Design AT89C51SND1C Power Consumption

Player Mode	I_{DD}	Test Conditions
Stop	10 mA	AT89C51SND1C at 16 MHz, X2 mode, V_{DD}= 3 V No song playing
Playing	30 mA	AT89C51SND1C at 16 MHz, X2 mode, V_{DD}= 3 V MP3 Song with Fs= 44.1 KHz, at any bit rates (Variable Bit Rate)

7.2.1.1 I_{DD}, I_{DL} and I_{PD} Test Conditions

Figure 7-1. I_{DD} Test Condition, Active Mode

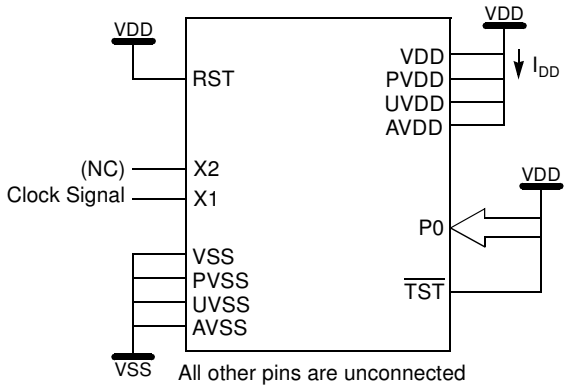

Figure 7-2. I_{DL} Test Condition, Idle Mode

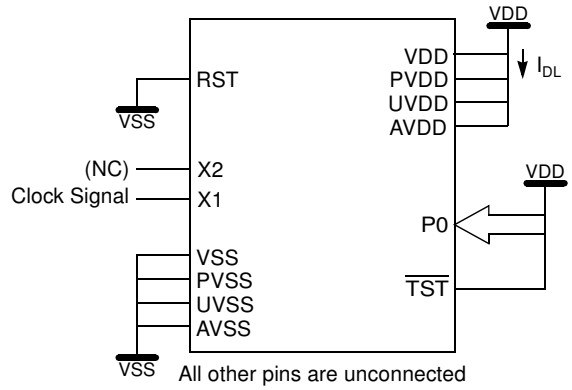

Figure 7-3. I_{PD} Test Condition, Power-Down Mode

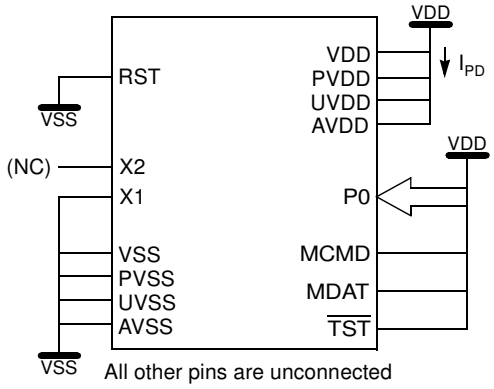

7.2.2 A to D Converter

Table 18. A to D Converter DC Characteristics

V_{DD} = 2.7 to 3.3 V, T_A = -40 to +85°C

Symbol	Parameter	Min	Typ	Max	Units	Test Conditions
AV_{DD}	Analog Supply Voltage	2.7		3.3	V	
AI_{DD}	Analog Operating Supply Current			600	µA	AV_{DD}= 3.3V AIN1:0= 0 to AV_{DD} ADEN= 1
AI_{PD}	Analog Standby Current			2	µA	AV_{DD}= 3.3V ADEN= 0 or PD= 1
AV_{IN}	Analog Input Voltage	AV_{SS}		AV_{DD}	V	
AV_{REF}	Reference Voltage A_{REFN} A_{REFP}	 AV_{SS} 2.4		 AV_{DD}	V	
R_{REF}	AREF Input Resistance	10		30	KΩ	T_A= 25°C
C_{IA}	Analog Input capacitance			10	pF	T_A= 25°C

7.2.3 Oscillator & Crystal

7.2.3.1 Schematic

Figure 7-4. Crystal Connection

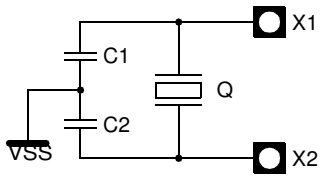

Note: For operation with most standard crystals, no external components are needed on X1 and X2. It may be necessary to add external capacitors on X1 and X2 to ground in special cases (max 10 pF). X1 and X2 may not be used to drive other circuits.

7.2.3.2 Parameters

Table 19. Oscillator & Crystal Characteristics

V_{DD} = 2.7 to 3.3 V, T_A = -40 to +85°C

Symbol	Parameter	Min	Typ	Max	Unit
C_{X1}	Internal Capacitance (X1 - VSS)		10		pF
C_{X2}	Internal Capacitance (X2 - VSS)		10		pF
C_L	Equivalent Load Capacitance (X1 - X2)		5		pF
DL	Drive Level			50	µW
F	Crystal Frequency			20	MHz
RS	Crystal Series Resistance			40	Ω
CS	Crystal Shunt Capacitance			6	pF

7.2.4 Phase Lock Loop

7.2.4.1 Schematic

Figure 7-5. PLL Filter Connection

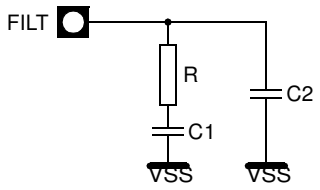

7.2.4.2 Parameters

Table 20. PLL Filter Characteristics

V_{DD} = 2.7 to 3.3 V, T_A = -40 to +85°C

Symbol	Parameter	Min	Typ	Max	Unit
R	Filter Resistor		100		Ω
C1	Filter Capacitance 1		10		nF
C2	Filter Capacitance 2		2.2		nF

7.2.5 USB Connection

7.2.5.1 Schematic

Figure 7-6. USB Connection

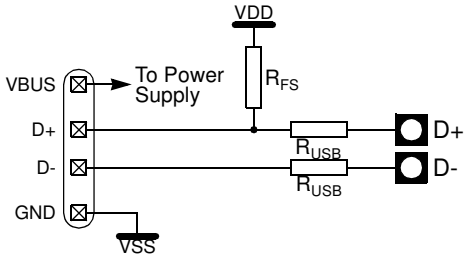

7.2.5.2 Parameters

Table 21. USB Characteristics

V_{DD} = 2.7 to 3.3 V, T_A = -40 to +85°C

Symbol	Parameter	Min	Typ	Max	Unit
R_{USB}	USB Termination Resistor		27		Ω
R_{FS}	USB Full Speed Resistor		1.5		KΩ

7.2.6 MMC Controller

7.2.6.1 Schematic

Figure 7-7. MMC Connection

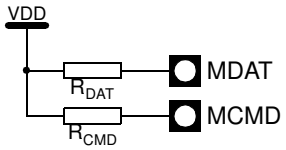

7.2.6.2 Parameters

Table 22. MMC Components Characteristics

V_{DD} = 2.7 to 3.3 V, T_A = -40 to +85°C

Symbol	Parameter	Min	Typ	Max	Unit
R_{CMD}	MMC/SD Command Line Pull-Up Resistor		1OO		KΩ
R_{DAT}	MMC/SD Data Line Pull-Up Resistor		10		KΩ

7.2.7 In System Programming

7.2.7.1 Schematic

Figure 7-8. ISP Pull-Down Connection

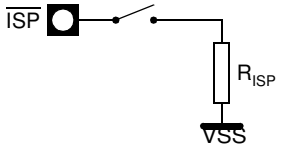

7.2.7.2 Parameters

Table 23. ISP Pull-Down Characteristics

V_{DD} = 2.7 to 3.3 V, T_A = -40 to +85°C

Symbol	Parameter	Min	Typ	Max	Unit
R_{ISP}	ISP Pull-Down Resistor		2.2		KΩ

7.3 AC Characteristics

7.3.1 External Program Bus Cycles

7.3.1.1 Definition of Symbols

Table 24. External Program Bus Cycles Timing Symbol Definitions

Signals	
A	Address
I	Instruction In
L	ALE
P	$\overline{\text{PSEN}}$

Conditions	
H	High
L	Low
V	Valid
X	No Longer Valid
Z	Floating

7.3.1.2 Timings

Test conditions: capacitive load on all pins= 50 pF.

Table 25. External Program Bus Cycle - Read AC Timings

V_{DD} = 2.7 to 3.3 V, T_A = -40 to +85°C

Symbol	Parameter	Variable Clock Standard Mode		Variable Clock X2 Mode		Unit
		Min	Max	Min	Max	
T_{CLCL}	Clock Period	50		50		ns
T_{LHLL}	ALE Pulse Width	$2 \cdot T_{CLCL}-15$		$T_{CLCL}-15$		ns
T_{AVLL}	Address Valid to ALE Low	$T_{CLCL}-20$		$0.5 \cdot T_{CLCL}-20$		ns
T_{LLAX}	Address hold after ALE Low	$T_{CLCL}-20$		$0.5 \cdot T_{CLCL}-20$		ns
T_{LLIV}	ALE Low to Valid Instruction	$4 \cdot T_{CLCL}-35$		$2 \cdot T_{CLCL}-35$		ns
T_{PLPH}	$\overline{\text{PSEN}}$ Pulse Width	$3 \cdot T_{CLCL}-25$		$1.5 \cdot T_{CLCL}-25$		ns
T_{PLIV}	$\overline{\text{PSEN}}$ Low to Valid Instruction		$3 \cdot T_{CLCL}-35$		$1.5 \cdot T_{CLCL}-35$	ns
T_{PXIX}	Instruction Hold After $\overline{\text{PSEN}}$ High	0		0		ns
T_{PXIZ}	Instruction Float After $\overline{\text{PSEN}}$ High		$T_{CLCL}-10$		$0.5 \cdot T_{CLCL}-10$	ns
T_{AVIV}	Address Valid to Valid Instruction		$5 \cdot T_{CLCL}-35$		$2.5 \cdot T_{CLCL}-35$	ns
T_{PLAZ}	$\overline{\text{PSEN}}$ Low to Address Float		10		10	ns

7.3.1.3 Waveforms

Figure 7-9. External Program Bus Cycle - Read Waveforms

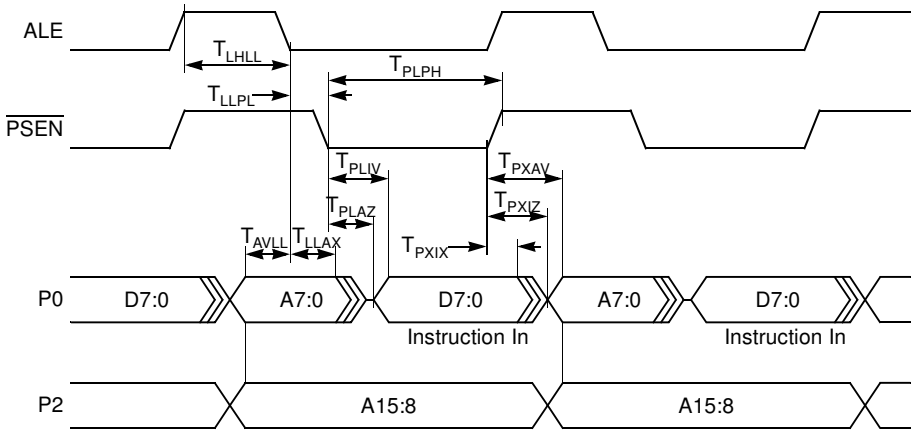

7.3.2 External Data 8-bit Bus Cycles

7.3.2.1 Definition of Symbols

Table 26. External Data 8-bit Bus Cycles Timing Symbol Definitions

Signals	
A	Address
D	Data In
L	ALE
Q	Data Out
R	$\overline{RD}$
W	$\overline{WR}$

Conditions	
H	High
L	Low
V	Valid
X	No Longer Valid
Z	Floating

7.3.2.2 Timings

Test conditions: capacitive load on all pins= 50 pF.

Table 27. External Data 8-bit Bus Cycle - Read AC Timings

V_{DD} = 2.7 to 3.3 V, T_A = -40 to +85°C

Symbol	Parameter	Variable Clock Standard Mode		Variable Clock X2 Mode		Unit
		Min	Max	Min	Max	
T_{CLCL}	Clock Period	50		50		ns
T_{LHLL}	ALE Pulse Width	$2 \cdot T_{CLCL}$-15		T_{CLCL}-15		ns
T_{AVLL}	Address Valid to ALE Low	T_{CLCL}-20		$0.5 \cdot T_{CLCL}$-20		ns
T_{LLAX}	Address hold after ALE Low	T_{CLCL}-20		$0.5 \cdot T_{CLCL}$-20		ns
T_{LLRL}	ALE Low to $\overline{RD}$ Low	$3 \cdot T_{CLCL}$-30		$1.5 \cdot T_{CLCL}$-30		ns

Symbol	Parameter	Variable Clock Standard Mode		Variable Clock X2 Mode		Unit
		Min	Max	Min	Max	
T_{RLRH}	$\overline{RD}$ Pulse Width	$6 \cdot T_{CLCL}-25$		$3 \cdot T_{CLCL}-25$		ns
T_{RHLH}	$\overline{RD}$ high to ALE High	$T_{CLCL}-20$	$T_{CLCL}+20$	$0.5 \cdot T_{CLCL}-20$	$0.5 \cdot T_{CLCL}+20$	ns
T_{AVDV}	Address Valid to Valid Data In		$9 \cdot T_{CLCL}-65$		$4.5 \cdot T_{CLCL}-65$	ns
T_{AVRL}	Address Valid to $\overline{RD}$ Low	$4 \cdot T_{CLCL}-30$		$2 \cdot T_{CLCL}-30$		ns
T_{RLDV}	$\overline{RD}$ Low to Valid Data		$5 \cdot T_{CLCL}-30$		$2.5 \cdot T_{CLCL}-30$	ns
T_{RLAZ}	$\overline{RD}$ Low to Address Float		0		0	ns
T_{RHDX}	Data Hold After $\overline{RD}$ High	0		0		ns
T_{RHDZ}	Data Float After $\overline{RD}$ High		$2 \cdot T_{CLCL}-25$		$T_{CLCL}-25$	ns

Table 28. External Data 8-bit Bus Cycle - Write AC Timings

V_{DD} = 2.7 to 3.3 V, T_A = -40 to +85°C

Symbol	Parameter	Variable Clock Standard Mode		Variable Clock X2 Mode		Unit
		Min	Max	Min	Max	
T_{CLCL}	Clock Period	50		50		ns
T_{LHLL}	ALE Pulse Width	$2 \cdot T_{CLCL}-15$		$T_{CLCL}-15$		ns
T_{AVLL}	Address Valid to ALE Low	$T_{CLCL}-20$		$0.5 \cdot T_{CLCL}-20$		ns
T_{LLAX}	Address hold after ALE Low	$T_{CLCL}-20$		$0.5 \cdot T_{CLCL}-20$		ns
T_{LLWL}	ALE Low to $\overline{WR}$ Low	$3 \cdot T_{CLCL}-30$		$1.5 \cdot T_{CLCL}-30$		ns
T_{WLWH}	$\overline{WR}$ Pulse Width	$6 \cdot T_{CLCL}-25$		$3 \cdot T_{CLCL}-25$		ns
T_{WHLH}	$\overline{WR}$ High to ALE High	$T_{CLCL}-20$	$T_{CLCL}+20$	$0.5 \cdot T_{CLCL}-20$	$0.5 \cdot T_{CLCL}+20$	ns
T_{AVWL}	Address Valid to $\overline{WR}$ Low	$4 \cdot T_{CLCL}-30$		$2 \cdot T_{CLCL}-30$		ns
T_{QVWH}	Data Valid to $\overline{WR}$ High	$7 \cdot T_{CLCL}-20$		$3.5 \cdot T_{CLCL}-20$		ns
T_{WHQX}	Data Hold after $\overline{WR}$ High	$T_{CLCL}-15$		$0.5 \cdot T_{CLCL}-15$		ns

7.3.2.3 Waveforms

Figure 7-10. External Data 8-bit Bus Cycle - Read Waveforms

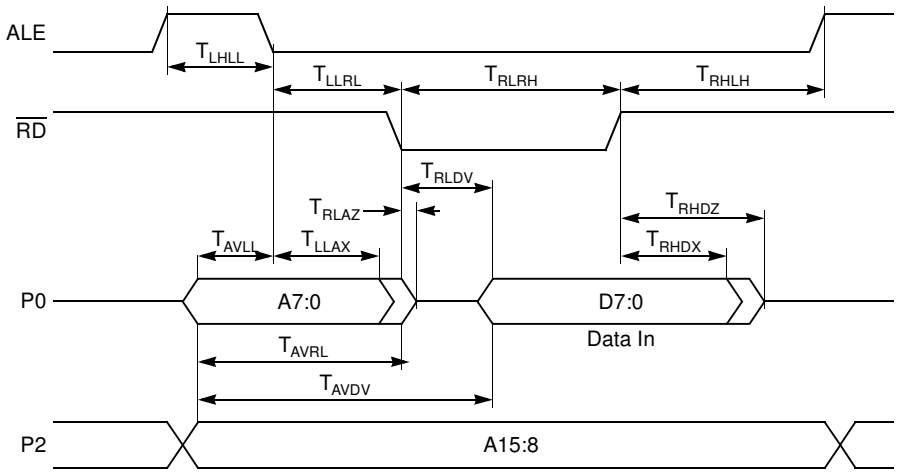

Figure 7-11. External Data 8-bit Bus Cycle - Write Waveforms

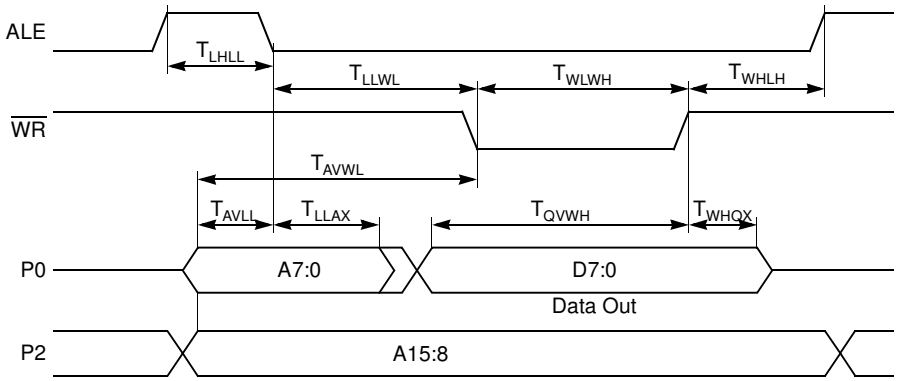

7.3.3 External IDE 16-bit Bus Cycles

7.3.3.1 Definition of Symbols

Table 29. External IDE 16-bit Bus Cycles Timing Symbol Definitions

Signals	
A	Address
D	Data In
L	ALE
Q	Data Out
R	$\overline{RD}$
W	$\overline{WR}$

Conditions	
H	High
L	Low
V	Valid
X	No Longer Valid
Z	Floating

7.3.3.2 Timings

Test conditions: capacitive load on all pins= 50 pF.

Table 30. External IDE 16-bit Bus Cycle - Data Read AC Timings

V_{DD} = 2.7 to 3.3 V, T_A = -40 to +85°C

Symbol	Parameter	Variable Clock Standard Mode		Variable Clock X2 Mode		Unit
		Min	Max	Min	Max	
T_{CLCL}	Clock Period	50		50		ns
T_{LHLL}	ALE Pulse Width	$2 \cdot T_{CLCL}$-15		T_{CLCL}-15		ns
T_{AVLL}	Address Valid to ALE Low	T_{CLCL}-20		$0.5 \cdot T_{CLCL}$-20		ns
T_{LLAX}	Address hold after ALE Low	T_{CLCL}-20		$0.5 \cdot T_{CLCL}$-20		ns
T_{LLRL}	ALE Low to $\overline{RD}$ Low	$3 \cdot T_{CLCL}$-30		$1.5 \cdot T_{CLCL}$-30		ns
T_{RLRH}	$\overline{RD}$ Pulse Width	$6 \cdot T_{CLCL}$-25		$3 \cdot T_{CLCL}$-25		ns
T_{RHLH}	$\overline{RD}$ high to ALE High	T_{CLCL}-20	T_{CLCL}+20	$0.5 \cdot T_{CLCL}$-20	$0.5 \cdot T_{CLCL}$+20	ns
T_{AVDV}	Address Valid to Valid Data In		$9 \cdot T_{CLCL}$-65		$4.5 \cdot T_{CLCL}$-65	ns
T_{AVRL}	Address Valid to $\overline{RD}$ Low	$4 \cdot T_{CLCL}$-30		$2 \cdot T_{CLCL}$-30		ns
T_{RLDV}	$\overline{RD}$ Low to Valid Data		$5 \cdot T_{CLCL}$-30		$2.5 \cdot T_{CLCL}$-30	ns
T_{RLAZ}	$\overline{RD}$ Low to Address Float		0		0	ns
T_{RHDX}	Data Hold After $\overline{RD}$ High	0		0		ns
T_{RHDZ}	Data Float After $\overline{RD}$ High		$2 \cdot T_{CLCL}$-25		T_{CLCL}-25	ns

Table 31. External IDE 16-bit Bus Cycle - Data Write AC Timings

V_{DD} = 2.7 to 3.3 V, T_A = -40 to +85°C

Symbol	Parameter	Variable Clock Standard Mode		Variable Clock X2 Mode		Unit
		Min	Max	Min	Max	
T_{CLCL}	Clock Period	50		50		ns
T_{LHLL}	ALE Pulse Width	$2 \cdot T_{CLCL}$-15		T_{CLCL}-15		ns
T_{AVLL}	Address Valid to ALE Low	T_{CLCL}-20		$0.5 \cdot T_{CLCL}$-20		ns
T_{LLAX}	Address hold after ALE Low	T_{CLCL}-20		$0.5 \cdot T_{CLCL}$-20		ns
T_{LLWL}	ALE Low to $\overline{WR}$ Low	$3 \cdot T_{CLCL}$-30		$1.5 \cdot T_{CLCL}$-30		ns
T_{WLWH}	$\overline{WR}$ Pulse Width	$6 \cdot T_{CLCL}$-25		$3 \cdot T_{CLCL}$-25		ns
T_{WHLH}	$\overline{WR}$ High to ALE High	T_{CLCL}-20	T_{CLCL}+20	$0.5 \cdot T_{CLCL}$-20	$0.5 \cdot T_{CLCL}$+20	ns
T_{AVWL}	Address Valid to $\overline{WR}$ Low	$4 \cdot T_{CLCL}$-30		$2 \cdot T_{CLCL}$-30		ns
T_{QVWH}	Data Valid to $\overline{WR}$ High	$7 \cdot T_{CLCL}$-20		$3.5 \cdot T_{CLCL}$-20		ns
T_{WHQX}	Data Hold after $\overline{WR}$ High	T_{CLCL}-15		$0.5 \cdot T_{CLCL}$-15		ns

7.3.3.3 Waveforms

Figure 7-12. External IDE 16-bit Bus Cycle - Data Read Waveforms

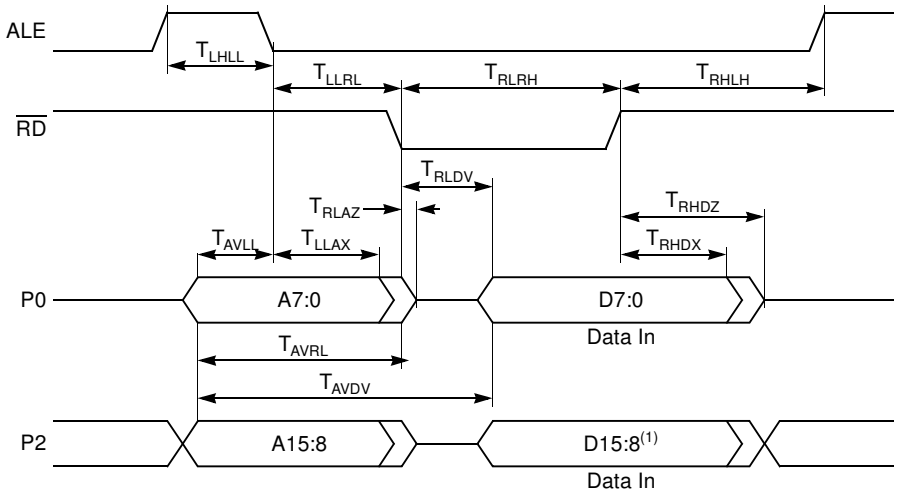

Note: 1. D15:8 is written in DAT16H SFR.

Figure 7-13. External IDE 16-bit Bus Cycle - Data Write Waveforms

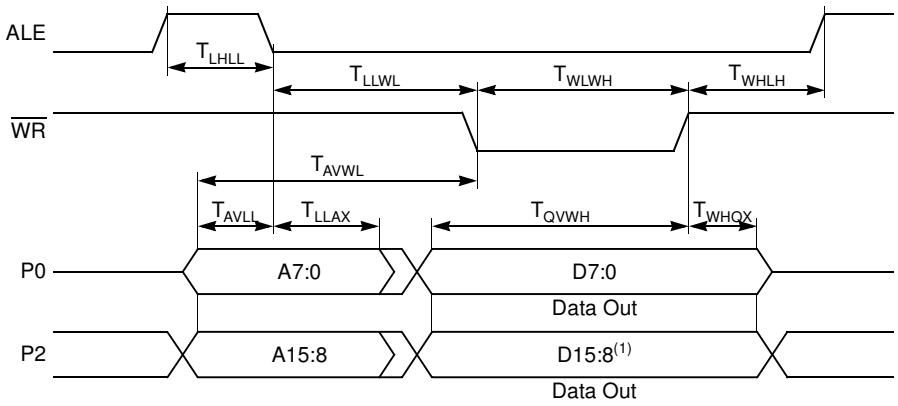

Note: 1. D15:8 is the content of DAT16H SFR.

7.4 SPI Interface

7.4.0.4 Definition of Symbols

Table 32. SPI Interface Timing Symbol Definitions

Signals	
C	Clock
I	Data In
O	Data Out

Conditions	
H	High
L	Low
V	Valid
X	No Longer Valid
Z	Floating

7.4.0.5 Timings

Test conditions: capacitive load on all pins= 50 pF.

Table 33. SPI Interface Master AC Timing

V_{DD} = 2.7 to 3.3 V, T_A = -40 to +85°C

Symbol	Parameter	Min	Max	Unit
Slave Mode				
T_{CHCH}	Clock Period	2		T_{PER}
T_{CHCX}	Clock High Time	0.8		T_{PER}
T_{CLCX}	Clock Low Time	0.8		T_{PER}
T_{SLCH}, T_{SLCL}	$\overline{SS}$ Low to Clock edge	100		ns
T_{IVCL}, T_{IVCH}	Input Data Valid to Clock Edge	40		ns
T_{CLIX}, T_{CHIX}	Input Data Hold after Clock Edge	40		ns
$T_{CLOV,}$ T_{CHOV}	Output Data Valid after Clock Edge		40	ns
T_{CLOX}, T_{CHOX}	Output Data Hold Time after Clock Edge	0		ns
T_{CLSH}, T_{CHSH}	$\overline{SS}$ High after Clock Edge	0		ns
T_{SLOV}	$\overline{SS}$ Low to Output Data Valid		50	ns
T_{SHOX}	Output Data Hold after $\overline{SS}$ High		50	ns
T_{SHSL}	$\overline{SS}$ High to $\overline{SS}$ Low	(1)		
T_{ILIH}	Input Rise Time		2	µs
T_{IHIL}	Input Fall Time		2	µs
T_{OLOH}	Output Rise time		100	ns
T_{OHOL}	Output Fall Time		100	ns
Master Mode				
T_{CHCH}	Clock Period	2		T_{PER}
T_{CHCX}	Clock High Time	0.8		T_{PER}
T_{CLCX}	Clock Low Time	0.8		T_{PER}
T_{IVCL}, T_{IVCH}	Input Data Valid to Clock Edge	20		ns
T_{CLIX}, T_{CHIX}	Input Data Hold after Clock Edge	20		ns
$T_{CLOV,}$ T_{CHOV}	Output Data Valid after Clock Edge		40	ns
T_{CLOX}, T_{CHOX}	Output Data Hold Time after Clock Edge	0		ns
T_{ILIH}	Input Data Rise Time		2	µs
T_{IHIL}	Input Data Fall Time		2	µs
T_{OLOH}	Output Data Rise time		50	ns
T_{OHOL}	Output Data Fall Time		50	ns

Note: 1. Value of this parameter depends on software.

7.4.0.6 Waveforms

Figure 7-14. SPI Slave Waveforms (SSCPHA= 0)

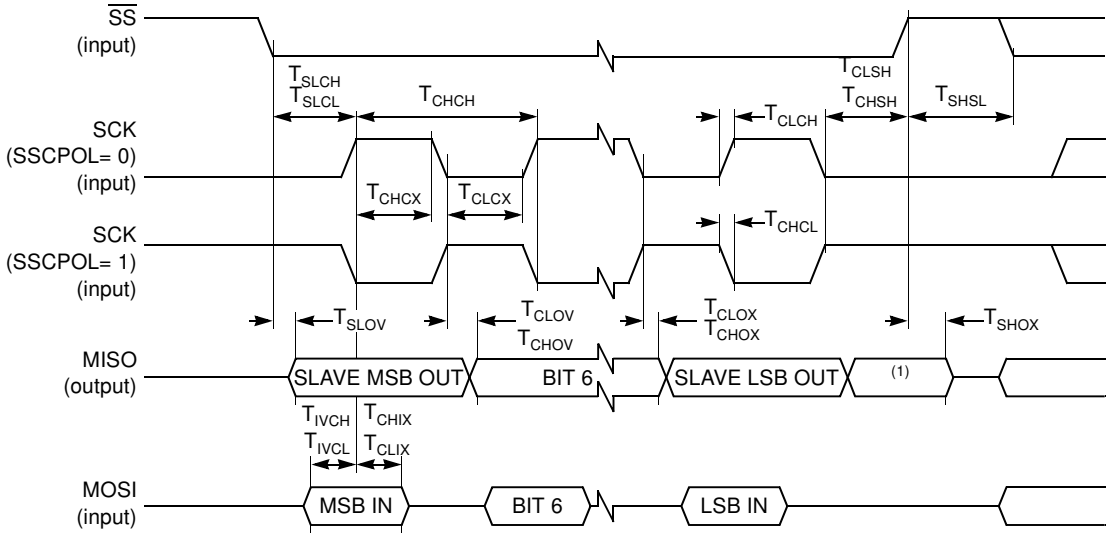

Note: 1. Not Defined but generally the MSB of the character which has just been received.

Figure 7-15. SPI Slave Waveforms (SSCPHA= 1)

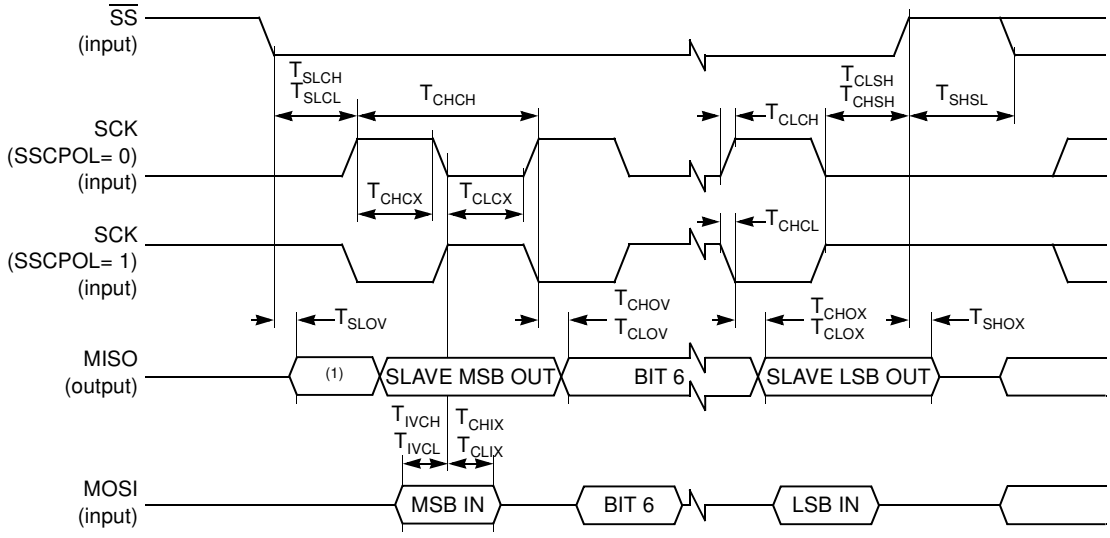

Note: 1. Not Defined but generally the LSB of the character which has just been received.

Figure 7-16. SPI Master Waveforms (SSCPHA= 0)

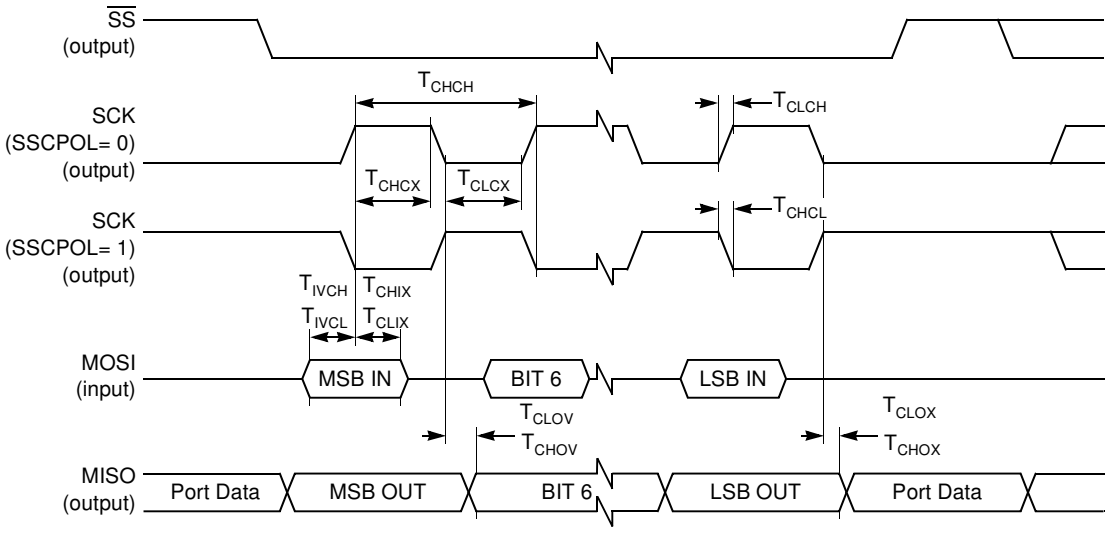

Note: 1. $\overline{SS}$ handled by software using general purpose port pin.

Figure 7-17. SPI Master Waveforms (SSCPHA= 1)

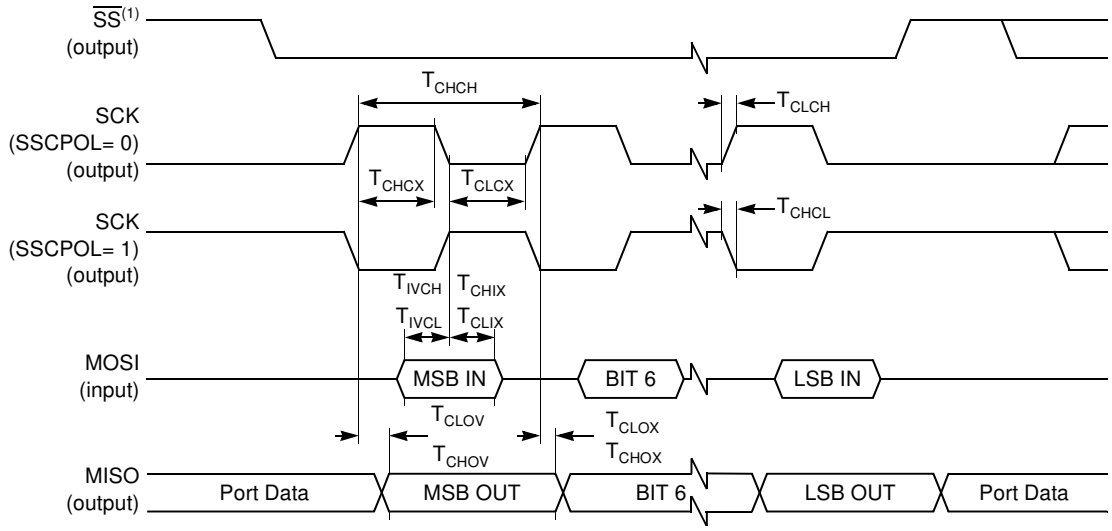

Note: 1. $\overline{SS}$ handled by software using general purpose port pin.

7.4.1 Two-wire Interface

7.4.1.1 Timings

Table 34. TWI Interface AC Timing

V_{DD} = 2.7 to 3.3 V, T_A = -40 to +85°C

Symbol	Parameter	INPUT Min Max	OUTPUT Min Max
T_{HD}; STA	Start condition hold time	14·T_{CLCL}(4)	4.0 µs(1)
T_{LOW}	SCL low time	16·T_{CLCL}(4)	4.7 µs(1)
T_{HIGH}	SCL high time	14·T_{CLCL}(4)	4.0 µs(1)
T_{RC}	SCL rise time	1 µs	-(2)
T_{FC}	SCL fall time	0.3 µs	0.3 µs(3)
T_{SU}; DAT1	Data set-up time	250 ns	20·T_{CLCL}(4)- T_{RD}
T_{SU}; DAT2	SDA set-up time (before repeated START condition)	250 ns	1 µs(1)
T_{SU}; DAT3	SDA set-up time (before STOP condition)	250 ns	8·T_{CLCL}(4)
T_{HD}; DAT	Data hold time	0 ns	8·T_{CLCL}(4) - T_{FC}
T_{SU}; STA	Repeated START set-up time	14·T_{CLCL}(4)	4.7 µs(1)
T_{SU}; STO	STOP condition set-up time	14·T_{CLCL}(4)	4.0 µs(1)
T_{BUF}	Bus free time	14·T_{CLCL}(4)	4.7 µs(1)
T_{RD}	SDA rise time	1 µs	-(2)
T_{FD}	SDA fall time	0.3 µs	0.3 µs(3)

Notes:
1. At 100 kbit/s. At other bit-rates this value is inversely proportional to the bit-rate of 100 kbit/s.
2. Determined by the external bus-line capacitance and the external bus-line pull-up resistor, this must be < 1 µs.
3. Spikes on the SDA and SCL lines with a duration of less than 3·T_{CLCL} will be filtered out. Maximum capacitance on bus-lines SDA and SCL= 400 pF.
4. T_{CLCL}= T_{OSC}= one oscillator clock period.

7.4.1.2 Waveforms

Figure 7-18. Two Wire Waveforms

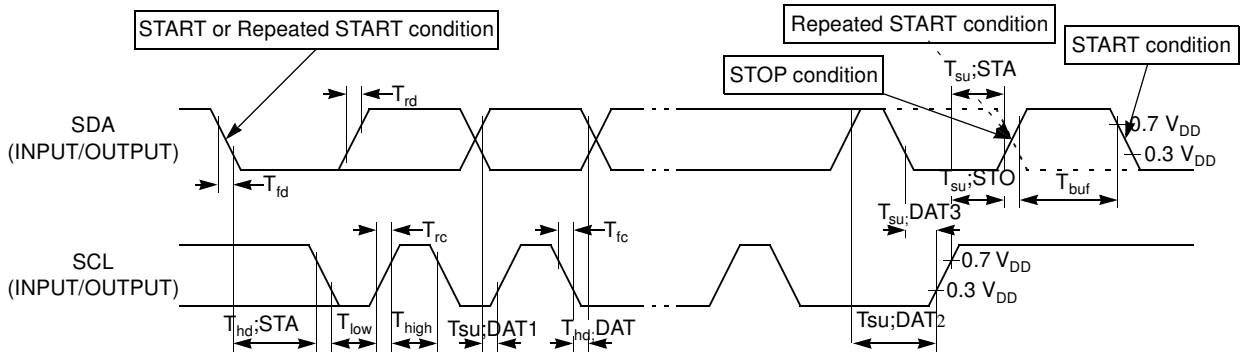

7.4.2 MMC Interface

7.4.2.1 *Definition of symbols*

Table 35. MMC Interface Timing Symbol Definitions

Signals	
C	Clock
D	Data In
O	Data Out

Conditions	
H	High
L	Low
V	Valid
X	No Longer Valid

7.4.2.2 *Timings*

Table 36. MMC Interface AC timings

V_{DD} = 2.7 to 3.3 V, T_A = -40 to +85°C, CL ≤ 100pF (10 cards)

Symbol	Parameter	Min	Max	Unit
T_{CHCH}	Clock Period	50		ns
T_{CHCX}	Clock High Time	10		ns
T_{CLCX}	Clock Low Time	10		ns
T_{CLCH}	Clock Rise Time		10	ns
T_{CHCL}	Clock Fall Time		10	ns
T_{DVCH}	Input Data Valid to Clock High	3		ns
T_{CHDX}	Input Data Hold after Clock High	3		ns
T_{CHOX}	Output Data Hold after Clock High	5		ns
T_{OVCH}	Output Data Valid to Clock High	5		ns

7.4.2.3 *Waveforms*

Figure 7-19. MMC Input-Output Waveforms

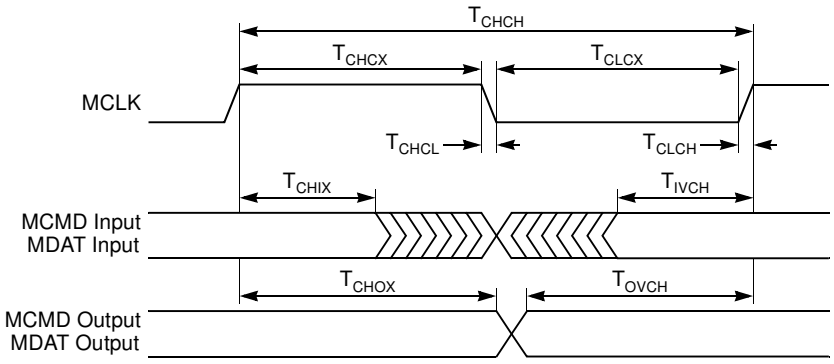

7.4.3 Audio Interface

7.4.3.1 Definition of symbols

Table 37. Audio Interface Timing Symbol Definitions

Signals	
C	Clock
O	Data Out
S	Data Select

Conditions	
H	High
L	Low
V	Valid
X	No Longer Valid

7.4.3.2 Timings

Table 38. Audio Interface AC timings

V_{DD} = 2.7 to 3.3 V, T_A = -40 to +85°C, CL≤ 30pF

Symbol	Parameter	Min	Max	Unit
T_{CHCH}	Clock Period		325.5(1)	ns
T_{CHCX}	Clock High Time	30		ns
T_{CLCX}	Clock Low Time	30		ns
T_{CLCH}	Clock Rise Time		10	ns
T_{CHCL}	Clock Fall Time		10	ns
T_{CLSV}	Clock Low to Select Valid		10	ns
T_{CLOV}	Clock Low to Data Valid		10	ns

Note: 1. 32-bit format with Fs= 48 KHz.

7.4.3.3 Waveforms

Figure 7-20. Audio Interface Waveforms

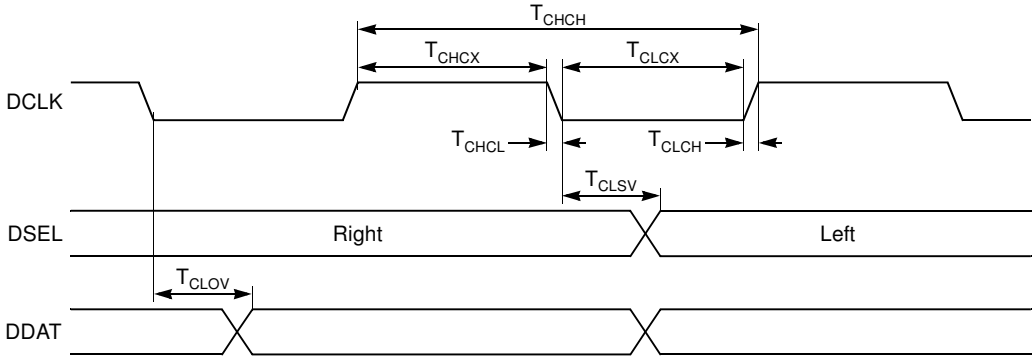

7.4.4 Analog to Digital Converter

7.4.4.1 Definition of symbols

Table 39. Analog to Digital Converter Timing Symbol Definitions

Signals	
C	Clock
E	Enable (ADEN bit)
S	Start Conversion (ADSST bit)

Conditions	
H	High
L	Low

7.4.4.2 Characteristics

Table 40. Analog to Digital Converter AC Characteristics

V_{DD} = 2.7 to 3.3 V, T_A = -40 to +85°C

Symbol	Parameter	Min	Max	Unit
T_{CLCL}	Clock Period	4		µs
T_{EHSH}	Start-up Time		4	µs
T_{SHSL}	Conversion Time		$11 \cdot T_{CLCL}$	µs
DLe	Differential non-linearity error(1)(2)		1	LSB
ILe	Integral non-linearity errorss(1)(3)		2	LSB
OSe	Offset error(1)(4)		4	LSB
Ge	Gain error(1)(5)		4	LSB

Notes:
1. AV_{DD}= AV_{REFP}= 3.0 V, AV_{SS}= AV_{REFN}= 0 V. ADC is monotonic with no missing code.
2. The differential non-linearity is the difference between the actual step width and the ideal step width (see Figure 7-22).
3. The integral non-linearity is the peak difference between the center of the actual step and the ideal transfer curve after appropriate adjustment of gain and offset errors (see Figure 7-22).
4. The offset error is the absolute difference between the straight line which fits the actual transfer curve (after removing of gain error), and the straight line which fits the ideal transfer curve (see Figure 7-22).
5. The gain error is the relative difference in percent between the straight line which fits the actual transfer curve (after removing of offset error), and the straight line which fits the ideal transfer curve (see Figure 7-22).

7.4.4.3 Waveforms

Figure 7-21. Analog to Digital Converter Internal Waveforms

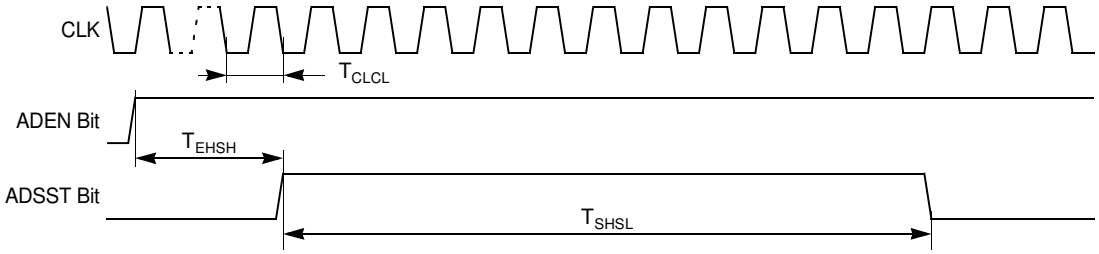

Figure 7-22. Analog to Digital Converter Characteristics

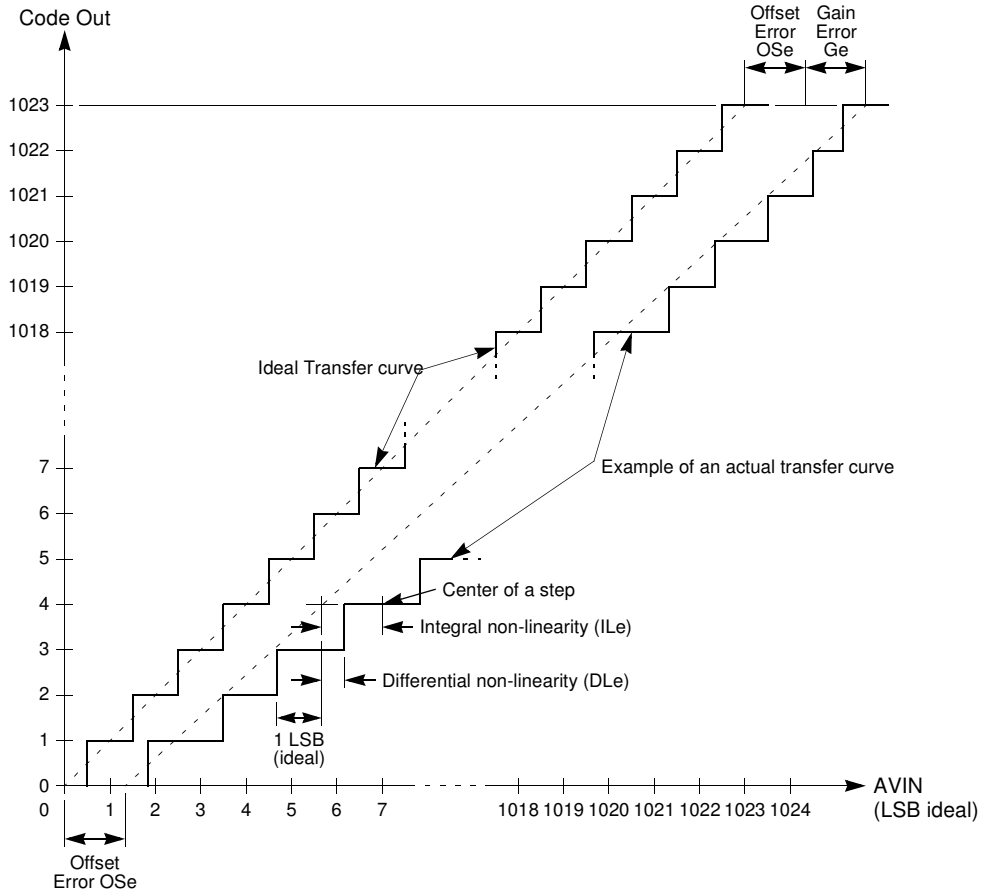

7.4.5 Flash Memory

7.4.5.1 Definition of symbols

Table 41. Flash Memory Timing Symbol Definitions

Signals	
S	$\overline{ISP}$
R	RST
B	FBUSY flag

Conditions	
L	Low
V	Valid
X	No Longer Valid

7.4.5.2 Timings

Table 42. Flash Memory AC Timing

V_{DD} = 2.7 to 3.3 V, T_A = -40 to +85°C

Symbol	Parameter	Min	Typ	Max	Unit
T_{SVRL}	Input $\overline{ISP}$ Valid to RST Edge	50			ns
T_{RLSX}	Input $\overline{ISP}$ Hold after RST Edge	50			ns
T_{BHBL}	FLASH Internal Busy (Programming) Time		10		ms
N_{FCY}	Number of Flash Write Cycles	100K			Cycle
T_{FDR}	Flash Data Retention Time	10			Years

7.4.5.3 Waveforms

Figure 7-23. FLASH Memory - ISP Waveforms

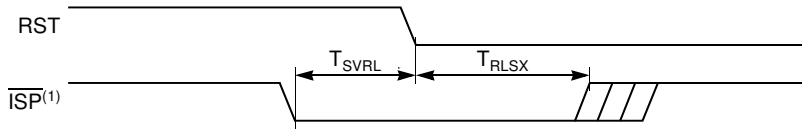

Note: 1. $\overline{ISP}$ must be driven through a pull-down resistor (see Section “In System Programming”, page 23).

Figure 7-24. FLASH Memory - Internal Busy Waveforms

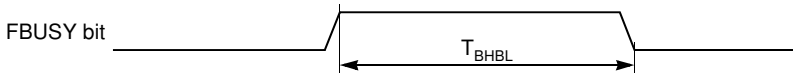

7.4.6 External Clock Drive and Logic Level References

7.4.6.1 Definition of symbols

Table 43. External Clock Timing Symbol Definitions

Signals	
C	Clock

Conditions	
H	High
L	Low
X	No Longer Valid

7.4.6.2 Timings

External Clock AC Timings

V_{DD} = 2.7 to 3.3 V, T_A = -40 to +85°C

Symbol	Parameter	Min	Max	Unit
T_{CLCL}	Clock Period	50		ns
T_{CHCX}	High Time	10		ns
T_{CLCX}	Low Time	10		ns
T_{CLCH}	Rise Time	3		ns
T_{CHCL}	Fall Time	3		ns
T_{CR}	Cyclic Ratio in X2 mode	40	60	%

7.4.6.3 Waveforms

Figure 7-25. External Clock Waveform

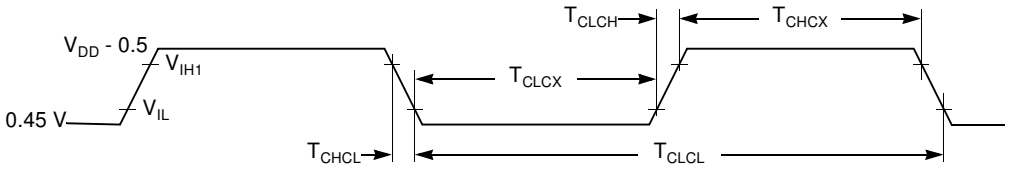

Figure 7-26. AC Testing Input/Output Waveforms

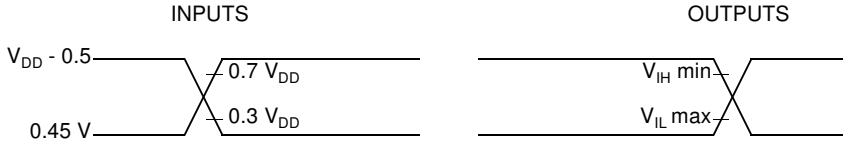

Note: 1. During AC testing, all inputs are driven at V_{DD} -0.5 V for a logic 1 and 0.45 V for a logic 0.
2. Timing measurements are made on all outputs at V_{IH} min for a logic 1 and V_{IL} max for a logic 0.

Figure 7-27. Float Waveforms

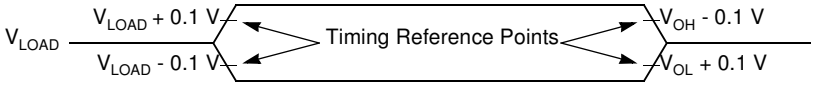

Note: For timing purposes, a port pin is no longer floating when a 100 mV change from load voltage occurs and begins to float when a 100 mV change from the loading V_{OH}/V_{OL} level occurs with $I_{OL}/I_{OH}= \pm 20$ mA.

8. Ordering Information

Part Number	Memory Size	Supply Voltage	Temperature Range	Max Frequency	Package[2]	Packing	Product Marking
AT89C51SND1C-ROTIL	OBSOLETE						
AT89C51SND1C-7HTIL							
AT89C51SND1C-DDV							
AT83SND1Cxxx[1]-ROTIL							
AT83SND1Cxxx[1]-7HTIL							
AT83SND1Cxxx-DDV							
AT80C51SND1C-ROTIL							
AT80C51SND1C-7HTIL							
AT80C51SND1C-DDV							
AT89C51SND1C-ROTUL	64K Flash	3V	Industrial & Green	40 MHz	TQFP80	Tray	89C51SND1C-IL
AT89C51SND1C-7HTJL	64K Flash	3V	Industrial	40 MHz	BGA81	Tray	89C51SND1C-IL
AT83SND1Cxxx[1]-ROTUL	64K ROM	3V	Industrial & Green	40 MHz	TQFP80	Tray	89C51SND1C-IL
AT83SND1Cxxx[1]-7HTJL	64K ROM	3V	Industrial & Green	40 MHz	BGA81	Tray	89C51SND1C-IL
AT80C51SND1C-ROTUL	ROMless	3V	Industrial & Green	40 MHz	TQFP80	Tray	89C51SND1C-IL
AT80C51SND1C-7HTJL	ROMless	3V	Industrial & Green	40 MHz	BGA81	Tray	89C51SND1C-IL

Notes: 1. Refers to ROM code.
2. PLCC84 package only available for development board.

Atmel Corporation

2325 Orchard Parkway
San Jose, CA 95131, USA
Tel: 1(408) 441-0311
Fax: 1(408) 487-2600

Regional Headquarters

Europe
Atmel Sarl
Route des Arsenaux 41
Case Postale 80
CH-1705 Fribourg
Switzerland
Tel: (41) 26-426-5555
Fax: (41) 26-426-5500

Asia
Room 1219
Chinachem Golden Plaza
77 Mody Road Tsimshatsui
East Kowloon
Hong Kong
Tel: (852) 2721-9778
Fax: (852) 2722-1369

Japan
9F, Tonetsu Shinkawa Bldg.
1-24-8 Shinkawa
Chuo-ku, Tokyo 104-0033
Japan
Tel: (81) 3-3523-3551
Fax: (81) 3-3523-7581

Atmel Operations

Memory
2325 Orchard Parkway
San Jose, CA 95131, USA
Tel: 1(408) 441-0311
Fax: 1(408) 436-4314

Microcontrollers
2325 Orchard Parkway
San Jose, CA 95131, USA
Tel: 1(408) 441-0311
Fax: 1(408) 436-4314

La Chantrerie
BP 70602
44306 Nantes Cedex 3, France
Tel: (33) 2-40-18-18-18
Fax: (33) 2-40-18-19-60

ASIC/ASSP/Smart Cards
Zone Industrielle
13106 Rousset Cedex, France
Tel: (33) 4-42-53-60-00
Fax: (33) 4-42-53-60-01

1150 East Cheyenne Mtn. Blvd.
Colorado Springs, CO 80906, USA
Tel: 1(719) 576-3300
Fax: 1(719) 540-1759

Scottish Enterprise Technology Park
Maxwell Building
East Kilbride G75 0QR, Scotland
Tel: (44) 1355-803-000
Fax: (44) 1355-242-743

RF/Automotive
Theresienstrasse 2
Postfach 3535
74025 Heilbronn, Germany
Tel: (49) 71-31-67-0
Fax: (49) 71-31-67-2340

1150 East Cheyenne Mtn. Blvd.
Colorado Springs, CO 80906, USA
Tel: 1(719) 576-3300
Fax: 1(719) 540-1759

Biometrics/Imaging/Hi-Rel MPU/
High Speed Converters/RF Datacom
Avenue de Rochepleine
BP 123
38521 Saint-Egreve Cedex, France
Tel: (33) 4-76-58-30-00
Fax: (33) 4-76-58-34-80

Literature Requests
www.atmel.com/literature

Disclaimer: The information in this document is provided in connection with Atmel products. No license, express or implied, by estoppel or otherwise, to any intellectual property right is granted by this document or in connection with the sale of Atmel products. **EXCEPT AS SET FORTH IN ATMEL'S TERMS AND CONDITIONS OF SALE LOCATED ON ATMEL'S WEB SITE, ATMEL ASSUMES NO LIABILITY WHATSOEVER AND DISCLAIMS ANY EXPRESS, IMPLIED OR STATUTORY WARRANTY RELATING TO ITS PRODUCTS INCLUDING, BUT NOT LIMITED TO, THE IMPLIED WARRANTY OF MERCHANTABILITY, FITNESS FOR A PARTICULAR PURPOSE, OR NON-INFRINGEMENT. IN NO EVENT SHALL ATMEL BE LIABLE FOR ANY DIRECT, INDIRECT, CONSEQUENTIAL, PUNITIVE, SPECIAL OR INCIDENTAL DAMAGES (INCLUDING, WITHOUT LIMITATION, DAMAGES FOR LOSS OF PROFITS, BUSINESS INTERRUPTION, OR LOSS OF INFORMATION) ARISING OUT OF THE USE OR INABILITY TO USE THIS DOCUMENT, EVEN IF ATMEL HAS BEEN ADVISED OF THE POSSIBILITY OF SUCH DAMAGES.** Atmel makes no representations or warranties with respect to the accuracy or completeness of the contents of this document and reserves the right to make changes to specifications and product descriptions at any time without notice. Atmel does not make any commitment to update the information contained herein. Unless specifically providedotherwise, Atmel products are not suitable for, and shall not be used in, automotive applications. Atmel'sAtmel's products are not intended, authorized, or warranted for use as components in applications intended to support or sustain life.

©2008 Atmel Corporation. **All rights reserved.** Atmel®, logo and combinations thereof, are registered trademarks, are the trademarks of Atmel Corporation or its subsidiaries. Other terms and product names may be trademarks of others.

Printed on recycled paper.

4109LS–8051–02/08