Features

- 80C51 Core Architecture
- 256 Bytes of On-chip RAM
- 1K Bytes of On-chip XRAM
- 32K Bytes of On-chip Flash Memory
  - Data Retention: 10 Years at 85°C
    Erase/Write Cycle: 100K
- Boot Code Section with Independent Lock Bits
- 2K Bytes of On-chip Flash for Bootloader
- In-System Programming by On-Chip Boot Program (CAN, UART) and IAP Capability
- 2K Bytes of On-chip EEPROM
  Erase/Write Cycle: 100K
- 14-sources 4-level Interrupts
- Three 16-bit Timers/Counters
- Full Duplex UART Compatible 80C51
- Maximum Crystal Frequency 40 MHz, in X2 Mode, 20 MHz (CPU Core, 20 MHz)
- Five Ports: 32 + 2 Digital I/O Lines
- Five-channel 16-bit PCA with:
  - PWM (8-bit)
  - High-speed Output
  - Timer and Edge Capture
- Double Data Pointer
- 21-bit Watchdog Timer (7 Programmable Bits)
- A 10-bit Resolution Analog to Digital Converter (ADC) with 8 Multiplexed Inputs
- Full CAN Controller:
  - Fully Compliant with CAN Rev2.0A and 2.0B
  - Optimized Structure for Communication Management (Via SFR)
  - 15 Independent Message Objects:
    Each Message Object Programmable on Transmission or Reception
    Individual Tag and Mask Filters up to 29-bit Identifier/Channel
    8-byte Cyclic Data Register (FIFO)/Message Object
    16-bit Status and Control Register/Message Object
    16-bit Time-Stamping Register/Message Object
    CAN Specification 2.0 Part A or 2.0 Part B Programmable for Each Message Object
    Access to Message Object Control and Data Registers Via SFR
    Programmable Reception Buffer Length Up To 15 Message Objects
    Priority Management of Reception of Hits on Several Message Objects at the Same Time (Basic CAN Feature)
    Priority Management for Transmission
    Message Object Overrun Interrupt
  - Supports:
    Time Triggered Communication
    Autobaud and Listening Mode
    Programmable Automatic Reply Mode
  - 1-Mbit/s Maximum Transfer Rate at 8 MHz [1] Crystal Frequency in X2 Mode
  - Readable Error Counters
  - Programmable Link to On-chip Timer for Time Stamping and Network Synchronization
  - Independent Baud Rate Prescaler
  - Data, Remote, Error and Overload Frame Handling
- On-chip Emulation Logic (Enhanced Hook System)
- Power Saving Modes:
  - Idle Mode
  - Power-down Mode

1. At BRP = 1 sampling point will be fixed.

Enhanced 8-bit Microcontroller with CAN Controller and Flash Memory

T89C51CC01
AT89C51CC01

Rev. 4129N–CAN–03/08

- **Power Supply: 3V to 5.5V**
- **Temperature Range: Industrial (-40° to +85°C)**
- **Packages: VQFP44, PLCC44**

Description

The T89C51CC01 is the first member of the CANary™ family of 8-bit microcontrollers dedicated to CAN network applications.

In X2 mode a maximum external clock rate of 20 MHz reaches a 300 ns cycle time.

Besides the full CAN controller T89C51CC01 provides 32K Bytes of Flash memory including In-System-Programming (ISP), 2K Bytes Boot Flash Memory, 2K Bytes EEPROM and 1.2-Kbyte RAM.

Special attention is paid to the reduction of the electro-magnetic emission of T89C51CC01.

Block Diagram

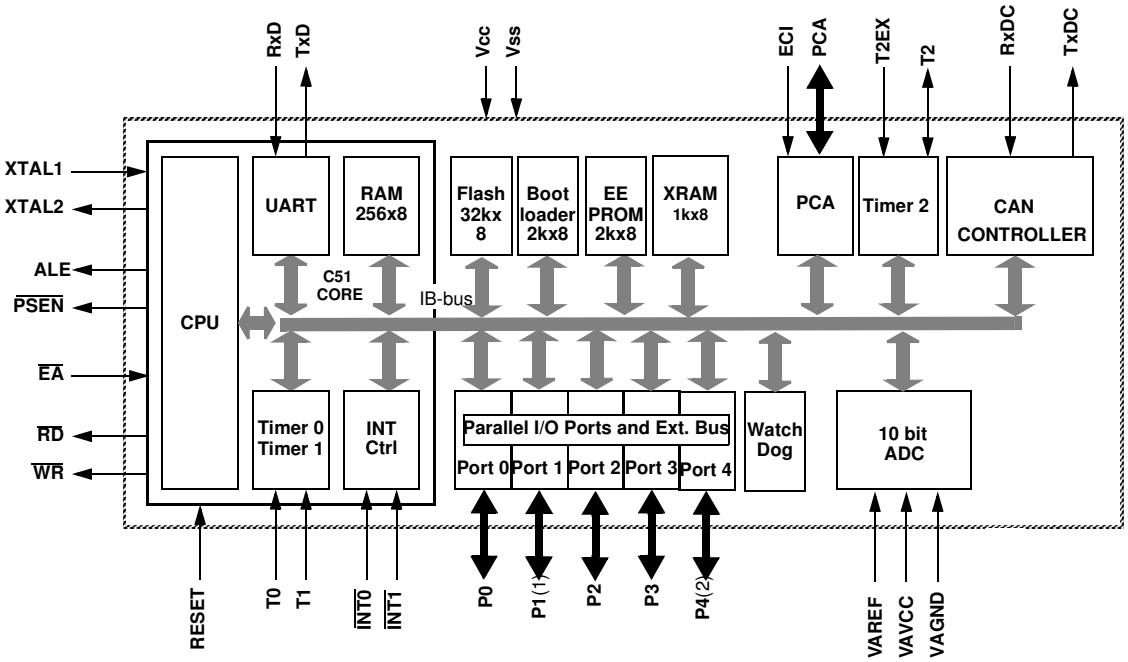

Notes: 1. 8 analog Inputs/8 Digital I/O
2. 2-Bit I/O Port

Pin Configuration

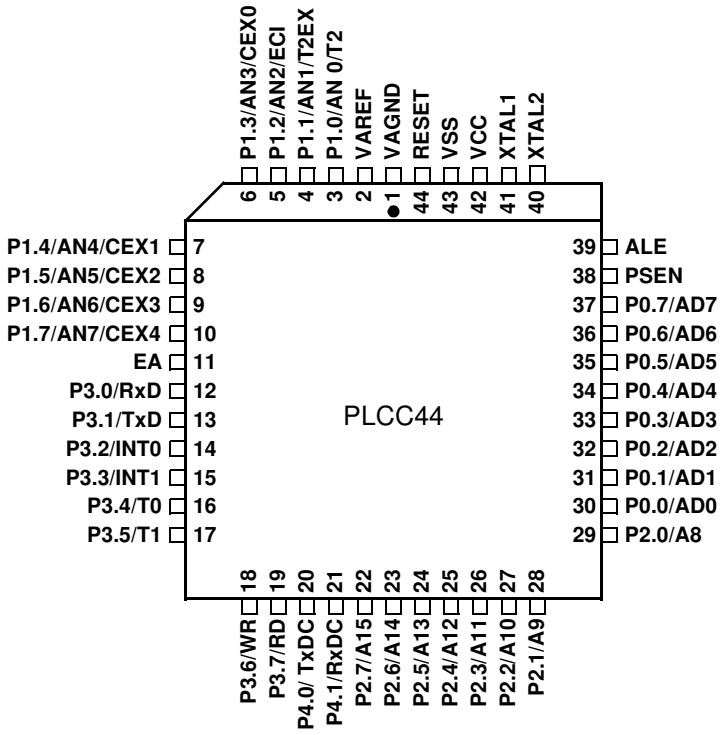

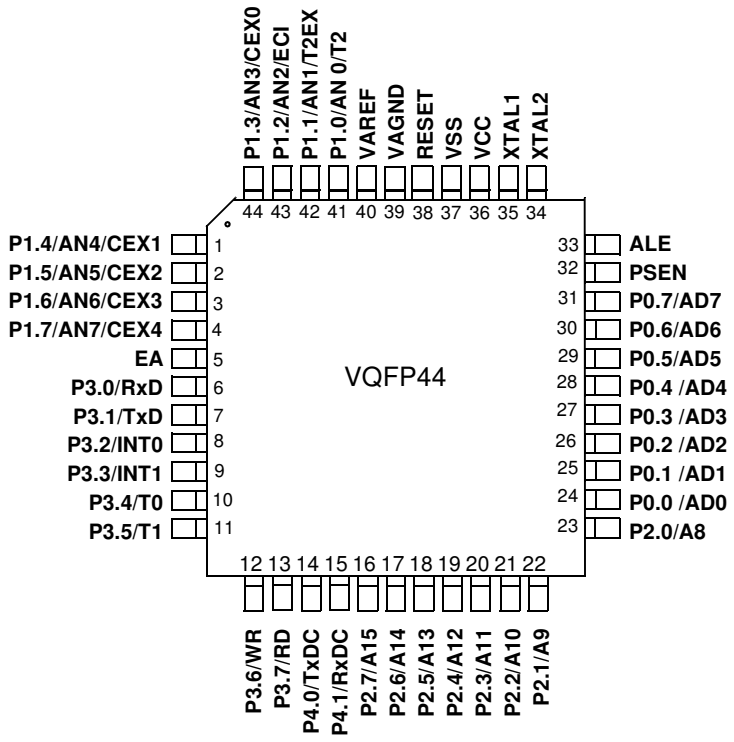

I/O Configurations

Each Port SFR operates via type-D latches, as illustrated in Figure 1 for Ports 3 and 4. A CPU "write to latch" signal initiates transfer of internal bus data into the type-D latch. A CPU "read latch" signal transfers the latched Q output onto the internal bus. Similarly, a "read pin" signal transfers the logical level of the Port pin. Some Port data instructions activate the "read latch" signal while others activate the "read pin" signal. Latch instructions are referred to as Read-Modify-Write instructions. Each I/O line may be independently programmed as input or output.

Port 1, Port 3 and Port 4

Figure 1 shows the structure of Ports 1 and 3, which have internal pull-ups. An external source can pull the pin low. Each Port pin can be configured either for general-purpose I/O or for its alternate input output function.

To use a pin for general-purpose output, set or clear the corresponding bit in the Px register (x = 1,3 or 4). To use a pin for general-purpose input, set the bit in the Px register. This turns off the output FET drive.

To configure a pin for its alternate function, set the bit in the Px register. When the latch is set, the "alternate output function" signal controls the output level (see Figure 1). The operation of Ports 1, 3 and 4 is discussed further in the "quasi-Bidirectional Port Operation" section.

Figure 1. Port 1, Port 3 and Port 4 Structure

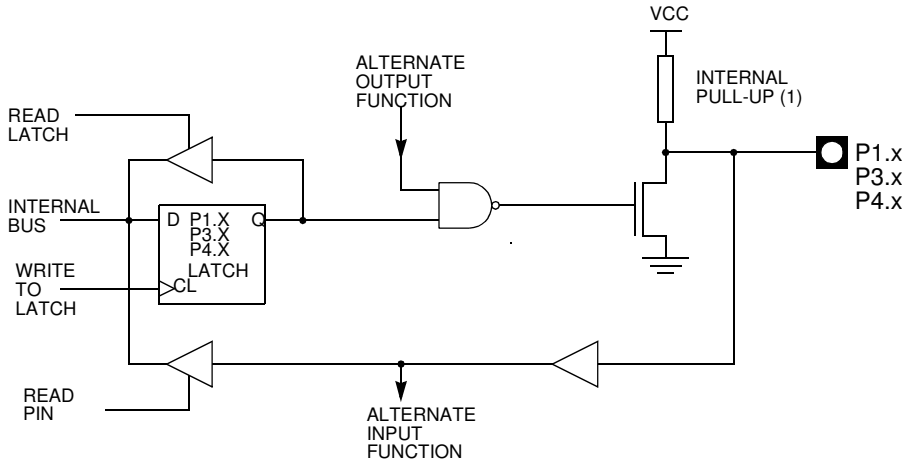

Note: The internal pull-up can be disabled on P1 when analog function is selected.

Port 0 and Port 2

Ports 0 and 2 are used for general-purpose I/O or as the external address/data bus. Port 0, shown in Figure 3, differs from the other Ports in not having internal pull-ups. Figure 3 shows the structure of Port 2. An external source can pull a Port 2 pin low.

To use a pin for general-purpose output, set or clear the corresponding bit in the Px register (x = 0 or 2). To use a pin for general-purpose input, set the bit in the Px register to turn off the output driver FET.

Figure 2. Port 0 Structure

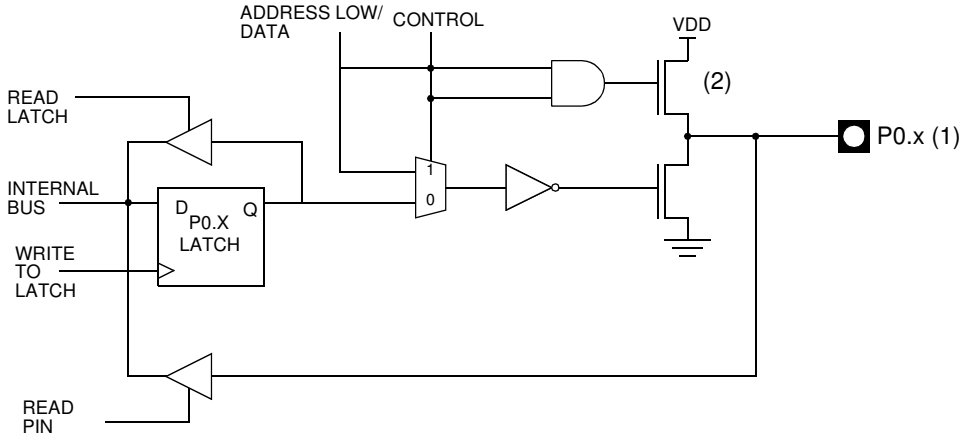

Notes: 1. Port 0 is precluded from use as general-purpose I/O Ports when used as address/data bus drivers.
2. Port 0 internal strong pull-ups assist the logic-one output for memory bus cycles only. Except for these bus cycles, the pull-up FET is off, Port 0 outputs are open-drain.

Figure 3. Port 2 Structure

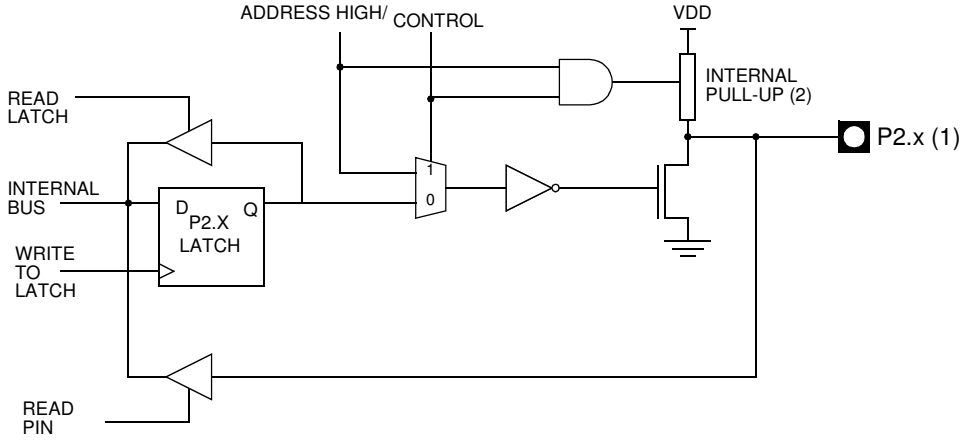

Notes: 1. Port 2 is precluded from use as general-purpose I/O Ports when as address/data bus drivers.
2. Port 2 internal strong pull-ups FET (P1 in FiGURE) assist the logic-one output for memory bus cycle.

When Port 0 and Port 2 are used for an external memory cycle, an internal control signal switches the output-driver input from the latch output to the internal address/data line.

Read-Modify-Write Instructions

Some instructions read the latch data rather than the pin data. The latch based instructions read the data, modify the data and then rewrite the latch. These are called "Read-Modify-Write" instructions. Below is a complete list of these special instructions (see Table). When the destination operand is a Port or a Port bit, these instructions read the latch rather than the pin:

Table 1. Read-Modify-Write Instructions

Instruction	Description	Example
ANL	logical AND	ANL P1, A
ORL	logical OR	ORL P2, A
XRL	logical EX-OR	XRL P3, A
JBC	jump if bit = 1 and clear bit	JBC P1.1, LABEL
CPL	complement bit	CPL P3.0
INC	increment	INC P2
DEC	decrement	DEC P2
DJNZ	decrement and jump if not zero	DJNZ P3, LABEL
MOV Px.y, C	move carry bit to bit y of Port x	MOV P1.5, C
CLR Px.y	clear bit y of Port x	CLR P2.4
SET Px.y	set bit y of Port x	SET P3.3

It is not obvious the last three instructions in this list are Read-Modify-Write instructions. These instructions read the port (all 8 bits), modify the specifically addressed bit and write the new byte back to the latch. These Read-Modify-Write instructions are directed to the latch rather than the pin in order to avoid possible misinterpretation of voltage (and therefore, logic) levels at the pin. For example, a Port bit used to drive the base of an external bipolar transistor can not rise above the transistor's base-emitter junction voltage (a value lower than VIL). With a logic one written to the bit, attempts by the CPU to read the Port at the pin are misinterpreted as logic zero. A read of the latch rather than the pins returns the correct logic-one value.

Quasi-Bidirectional Port Operation

Port 1, Port 2, Port 3 and Port 4 have fixed internal pull-ups and are referred to as "quasi-bidirectional" Ports. When configured as an input, the pin impedance appears as logic one and sources current in response to an external logic zero condition. Port 0 is a "true bidirectional" pin. The pins float when configured as input. Resets write logic one to all Port latches. If logical zero is subsequently written to a Port latch, it can be returned to input conditions by a logical one written to the latch.

Note: Port latch values change near the end of Read-Modify-Write instruction cycles. Output buffers (and therefore the pin state) update early in the instruction after Read-Modify-Write instruction cycle.

Logical zero-to-one transitions in Port 1, Port 2, Port 3 and Port 4 use an additional pull-up (p1) to aid this logic transition (see Figure 4.). This increases switch speed. This extra pull-up sources 100 times normal internal circuit current during 2 oscillator clock periods. The internal pull-ups are field-effect transistors rather than linear resistors. Pull-ups consist of three p-channel FET (pFET) devices. A pFET is on when the gate senses logical zero and off when the gate senses logical one. pFET #1 is turned on for two oscillator periods immediately after a zero-to-one transition in the Port latch. A logical one at the Port pin turns on pFET #3 (a weak pull-up) through the inverter. This inverter and pFET pair form a latch to drive logical one. pFET #2 is a very weak pull-up switched on whenever the associated nFET is switched off. This is traditional CMOS switch convention. Current strengths are 1/10 that of pFET #3.

Figure 4. Internal Pull-Up Configurations

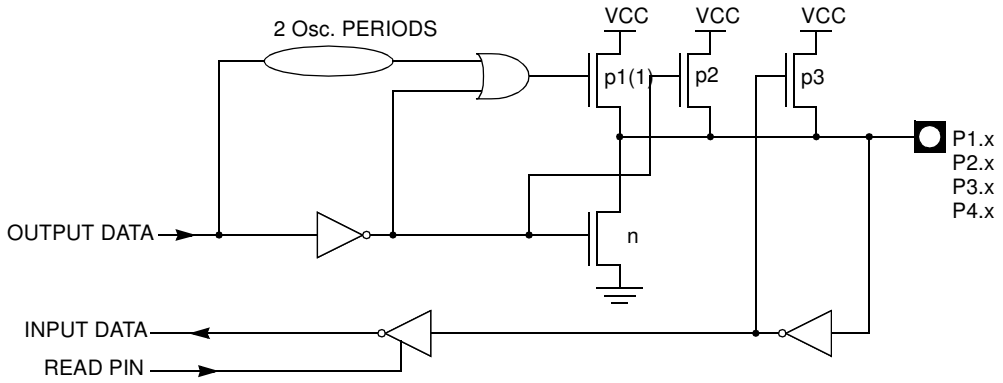

Note: Port 2 p1 assists the logic-one output for memory bus cycles.

SFR Mapping

The Special Function Registers (SFRs) of the T89C51CC01 fall into the following categories:

Table 2. C51 Core SFRs

Mnemonic	Add	Name	7	6	5	4	3	2	1	0
ACC	E0h	Accumulator	–	–	–	–	–	–	–	–
B	F0h	B Register	–	–	–	–	–	–	–	–
PSW	D0h	Program Status Word	CY	AC	F0	RS1	RS0	OV	F1	P
SP	81h	Stack Pointer	–	–	–	–	–	–	–	–
DPL	82h	Data Pointer Low byte LSB of DPTR	–	–	–	–	–	–	–	–
DPH	83h	Data Pointer High byte MSB of DPTR	–	–	–	–	–	–	–	–

Table 3. I/O Port SFRs

Mnemonic	Add	Name	7	6	5	4	3	2	1	0
P0	80h	Port 0	–	–	–	–	–	–	–	–
P1	90h	Port 1	–	–	–	–	–	–	–	–
P2	A0h	Port 2	–	–	–	–	–	–	–	–
P3	B0h	Port 3	–	–	–	–	–	–	–	–
P4	C0h	Port 4 (x2)	–	–	–	–	–	–	–	–

Table 4. Timers SFRs

Mnemonic	Add	Name	7	6	5	4	3	2	1	0
TH0	8Ch	Timer/Counter 0 High byte	–	–	–	–	–	–	–	–
TL0	8Ah	Timer/Counter 0 Low byte	–	–	–	–	–	–	–	–
TH1	8Dh	Timer/Counter 1 High byte	–	–	–	–	–	–	–	–
TL1	8Bh	Timer/Counter 1 Low byte	–	–	–	–	–	–	–	–
TH2	CDh	Timer/Counter 2 High byte	–	–	–	–	–	–	–	–
TL2	CCh	Timer/Counter 2 Low byte	–	–	–	–	–	–	–	–
TCON	88h	Timer/Counter 0 and 1 control	TF1	TR1	TF0	TR0	IE1	IT1	IE0	IT0
TMOD	89h	Timer/Counter 0 and 1 Modes	GATE1	C/T1#	M11	M01	GATE0	C/T0#	M10	M00

Table 4. Timers SFRs (Continued)

Mnemonic	Add	Name	7	6	5	4	3	2	1	0
T2CON	C8h	Timer/Counter 2 control	TF2	EXF2	RCLK	TCLK	EXEN2	TR2	C/T2#	CP/RL2#
T2MOD	C9h	Timer/Counter 2 Mode	–	–	–	–	–	–	T2OE	DCEN
RCAP2H	CBh	Timer/Counter 2 Reload/Capture High byte	–	–	–	–	–	–	–	–
RCAP2L	CAh	Timer/Counter 2 Reload/Capture Low byte	–	–	–	–	–	–	–	–
WDTRST	A6h	Watchdog Timer Reset	–	–	–	–	–	–	–	–
WDTPRG	A7h	Watchdog Timer Program	–	–	–	–	–	S2	S1	S0

Table 5. Serial I/O Port SFRs

Mnemonic	Add	Name	7	6	5	4	3	2	1	0
SCON	98h	Serial Control	FE/SM0	SM1	SM2	REN	TB8	RB8	TI	RI
SBUF	99h	Serial Data Buffer	–	–	–	–	–	–	–	–
SADEN	B9h	Slave Address Mask	–	–	–	–	–	–	–	–
SADDR	A9h	Slave Address	–	–	–	–	–	–	–	–

Table 6. PCA SFRs

Mnemonic	Add	Name	7	6	5	4	3	2	1	0
CCON	D8h	PCA Timer/Counter Control	CF	CR	–	CCF4	CCF3	CCF2	CCF1	CCF0
CMOD	D9h	PCA Timer/Counter Mode	CIDL	WDTE	–	–	–	CPS1	CPS0	ECF
CL	E9h	PCA Timer/Counter Low byte	–	–	–	–	–	–	–	–
CH	F9h	PCA Timer/Counter High byte	–	–	–	–	–	–	–	–
CCAPM0	DAh	PCA Timer/Counter Mode 0	–	ECOM0	CAPP0	CAPN0	MAT0	TOG0	PWM0	ECCF0
CCAPM1	DBh	PCA Timer/Counter Mode 1		ECOM1	CAPP1	CAPN1	MAT1	TOG1	PWM1	ECCF1
CCAPM2	DCh	PCA Timer/Counter Mode 2		ECOM2	CAPP2	CAPN2	MAT2	TOG2	PWM2	ECCF2
CCAPM3	DDh	PCA Timer/Counter Mode 3		ECOM3	CAPP3	CAPN3	MAT3	TOG3	PWM3	ECCF3
CCAPM4	DEh	PCA Timer/Counter Mode 4		ECOM4	CAPP4	CAPN4	MAT4	TOG4	PWM4	ECCF4
CCAP0H	FAh	PCA Compare Capture Module 0 H	CCAP0H7	CCAP0H6	CCAP0H5	CCAP0H4	CCAP0H3	CCAP0H2	CCAP0H1	CCAP0H0
CCAP1H	FBh	PCA Compare Capture Module 1 H	CCAP1H7	CCAP1H6	CCAP1H5	CCAP1H4	CCAP1H3	CCAP1H2	CCAP1H1	CCAP1H0
CCAP2H	FCh	PCA Compare Capture Module 2 H	CCAP2H7	CCAP2H6	CCAP2H5	CCAP2H4	CCAP2H3	CCAP2H2	CCAP2H1	CCAP2H0
CCAP3H	FDh	PCA Compare Capture Module 3 H	CCAP3H7	CCAP3H6	CCAP3H5	CCAP3H4	CCAP3H3	CCAP3H2	CCAP3H1	CCAP3H0
CCAP4H	FEh	PCA Compare Capture Module 4 H	CCAP4H7	CCAP4H6	CCAP4H5	CCAP4H4	CCAP4H3	CCAP4H2	CCAP4H1	CCAP4H0

Table 6. PCA SFRs (Continued)

Mnemonic	Add	Name	7	6	5	4	3	2	1	0
CCAP0L	EAh	PCA Compare Capture Module 0 L	CCAP0L7	CCAP0L6	CCAP0L5	CCAP0L4	CCAP0L3	CCAP0L2	CCAP0L1	CCAP0L0
CCAP1L	EBh	PCA Compare Capture Module 1 L	CCAP1L7	CCAP1L6	CCAP1L5	CCAP1L4	CCAP1L3	CCAP1L2	CCAP1L1	CCAP1L0
CCAP2L	ECh	PCA Compare Capture Module 2 L	CCAP2L7	CCAP2L6	CCAP2L5	CCAP2L4	CCAP2L3	CCAP2L2	CCAP2L1	CCAP2L0
CCAP3L	EDh	PCA Compare Capture Module 3 L	CCAP3L7	CCAP3L6	CCAP3L5	CCAP3L4	CCAP3L3	CCAP3L2	CCAP3L1	CCAP3L0
CCAP4L	EEh	PCA Compare Capture Module 4 L	CCAP4L7	CCAP4L6	CCAP4L5	CCAP4L4	CCAP4L3	CCAP4L2	CCAP4L1	CCAP4L0

Table 7. Interrupt SFRs

Mnemonic	Add	Name	7	6	5	4	3	2	1	0
IEN0	A8h	Interrupt Enable Control 0	EA	EC	ET2	ES	ET1	EX1	ET0	EX0
IEN1	E8h	Interrupt Enable Control 1	–	–	–	–	–	ETIM	EADC	ECAN
IPL0	B8h	Interrupt Priority Control Low 0	–	PPC	PT2	PS	PT1	PX1	PT0	PX0
IPH0	B7h	Interrupt Priority Control High 0	–	PPCH	PT2H	PSH	PT1H	PX1H	PT0H	PX0H
IPL1	F8h	Interrupt Priority Control Low 1	–	–	–	–	–	POVRL	PADCL	PCANL
IPH1	F7h	Interrupt Priority Control High1	–	–	–	–	–	POVRH	PADCH	PCANH

Table 8. ADC SFRs

Mnemonic	Add	Name	7	6	5	4	3	2	1	0
ADCON	F3h	ADC Control	–	PSIDLE	ADEN	ADEOC	ADSST	SCH2	SCH1	SCH0
ADCF	F6h	ADC Configuration	CH7	CH6	CH5	CH4	CH3	CH2	CH1	CH0
ADCLK	F2h	ADC Clock	–	–	–	PRS4	PRS3	PRS2	PRS1	PRS0
ADDH	F5h	ADC Data High byte	ADAT9	ADAT8	ADAT7	ADAT6	ADAT5	ADAT4	ADAT3	ADAT2
ADDL	F4h	ADC Data Low byte	–	–	–	–	–	–	ADAT1	ADAT0

Table 9. CAN SFRs

Mnemonic	Add	Name	7	6	5	4	3	2	1	0
CANGCON	ABh	CAN General Control	ABRQ	OVRQ	TTC	SYNCTTC	AUT–BAUD	TEST	ENA	GRES
CANGSTA	AAh	CAN General Status	–	OVFG	–	TBSY	RBSY	ENFG	BOFF	ERRP
CANGIT	9Bh	CAN General Interrupt	CANIT	–	OVRTIM	OVRBUF	SERG	CERG	FERG	AERG
CANBT1	B4h	CAN Bit Timing 1	–	BRP5	BRP4	BRP3	BRP2	BRP1	BRP0	–
CANBT2	B5h	CAN Bit Timing 2	–	SJW1	SJW0	–	PRS2	PRS1	PRS0	–
CANBT3	B6h	CAN Bit Timing 3	–	PHS22	PHS21	PHS20	PHS12	PHS11	PHS10	SMP

Table 9. CAN SFRs (Continued)

Mnemonic	Add	Name	7	6	5	4	3	2	1	0
CANEN1	CEh	CAN Enable Channel byte 1	–	ENCH14	ENCH13	ENCH12	ENCH11	ENCH10	ENCH9	ENCH8
CANEN2	CFh	CAN Enable Channel byte 2	ENCH7	ENCH6	ENCH5	ENCH4	ENCH3	ENCH2	ENCH1	ENCH0
CANGIE	C1h	CAN General Interrupt Enable	–	–	ENRX	ENTX	ENERCH	ENBUF	ENERG	–
CANIE1	C2h	CAN Interrupt Enable Channel byte 1	–	IECH14	IECH13	IECH12	IECH11	IECH10	IECH9	IECH8
CANIE2	C3h	CAN Interrupt Enable Channel byte 2	IECH7	IECH6	IECH5	IECH4	IECH3	IECH2	IECH1	IECH0
CANSIT1	BAh	CAN Status Interrupt Channel byte1	–	SIT14	SIT13	SIT12	SIT11	SIT10	SIT9	SIT8
CANSIT2	BBh	CAN Status Interrupt Channel byte2	SIT7	SIT6	SIT5	SIT4	SIT3	SIT2	SIT1	SIT0
CANTCON	A1h	CAN Timer Control	TPRESC 7	TPRESC 6	TPRESC 5	TPRESC 4	TPRESC 3	TPRESC 2	TPRESC 1	TPRESC 0
CANTIMH	ADh	CAN Timer high	CANTIM 15	CANTIM 14	CANTIM 13	CANTIM 12	CANTIM 11	CANTIM 10	CANTIM 9	CANTIM 8
CANTIML	ACh	CAN Timer low	CANTIM 7	CANTIM 6	CANTIM 5	CANTIM 4	CANTIM 3	CANTIM 2	CANTIM 1	CANTIM 0
CANSTMH	AFh	CAN Timer Stamp high	TIMSTMP 15	TIMSTMP 14	TIMSTMP 13	TIMSTMP 12	TIMSTMP 11	TIMSTMP 10	TIMSTMP 9	TIMSTMP 8
CANSTML	AEh	CAN Timer Stamp low	TIMSTMP 7	TIMSTMP 6	TIMSTMP 5	TIMSTMP 4	TIMSTMP 3	TIMSTMP 2	TIMSTMP 1	TIMSTMP 0
CANTTCH	A5h	CAN Timer TTC high	TIMTTC 15	TIMTTC 14	TIMTTC 13	TIMTTC 12	TIMTTC 11	TIMTTC 10	TIMTTC 9	TIMTTC 8
CANTTCL	A4h	CAN Timer TTC low	TIMTTC 7	TIMTTC 6	TIMTTC 5	TIMTTC 4	TIMTTC 3	TIMTTC 2	TIMTTC 1	TIMTTC 0
CANTEC	9Ch	CAN Transmit Error Counter	TEC7	TEC6	TEC5	TEC4	TEC3	TEC2	TEC1	TEC0
CANREC	9Dh	CAN Receive Error Counter	REC7	REC6	REC5	REC4	REC3	REC2	REC1	REC0
CANPAGE	B1h	CAN Page	CHNB3	CHNB2	CHNB1	CHNB0	AINC	INDX2	INDX1	INDX0
CANSTCH	B2h	CAN Status Channel	DLCW	TXOK	RXOK	BERR	SERR	CERR	FERR	AERR
CANCONH	B3h	CAN Control Channel	CONCH1	CONCH0	RPLV	IDE	DLC3	DLC2	DLC1	DLC0
CANMSG	A3h	CAN Message Data	MSG7	MSG6	MSG5	MSG4	MSG3	MSG2	MSG1	MSG0

Table 9. CAN SFRs (Continued)

Mnemonic	Add	Name	7	6	5	4	3	2	1	0
CANIDT1	BCh	CAN Identifier Tag byte 1(Part A) CAN Identifier Tag byte 1(PartB)	IDT10 IDT28	IDT9 IDT27	IDT8 IDT26	IDT7 IDT25	IDT6 IDT24	IDT5 IDT23	IDT4 IDT22	IDT3 IDT21
CANIDT2	BDh	CAN Identifier Tag byte 2 (PartA) CAN Identifier Tag byte 2 (PartB)	IDT2 IDT20	IDT1 IDT19	IDT0 IDT18	– IDT17	– IDT16	– IDT15	– IDT14	– IDT13
CANIDT3	BEh	CAN Identifier Tag byte 3(PartA) CAN Identifier Tag byte 3(PartB)	– IDT12	– IDT11	– IDT10	– IDT9	– IDT8	– IDT7	– IDT6	– IDT5
CANIDT4	BFh	CAN Identifier Tag byte 4(PartA) CAN Identifier Tag byte 4(PartB)	– IDT4	– IDT3	– IDT2	– IDT1	– IDT0	RTRTAG –	– RB1TAG	RB0TAG –
CANIDM1	C4h	CAN Identifier Mask byte 1(PartA) CAN Identifier Mask byte 1(PartB)	IDMSK10 IDMSK28	IDMSK9 IDMSK27	IDMSK8 IDMSK26	IDMSK7 IDMSK25	IDMSK6 IDMSK24	IDMSK5 IDMSK23	IDMSK4 IDMSK22	IDMSK3 IDMSK21
CANIDM2	C5h	CAN Identifier Mask byte 2(PartA) CAN Identifier Mask byte 2(PartB)	IDMSK2 IDMSK20	IDMSK1 IDMSK19	IDMSK0 IDMSK18	– IDMSK17	– IDMSK16	– IDMSK15	– IDMSK14	– IDMSK13
CANIDM3	C6h	CAN Identifier Mask byte 3(PartA) CAN Identifier Mask byte 3(PartB)	– IDMSK12	– IDMSK11	– IDMSK10	– IDMSK9	– IDMSK8	– IDMSK7	– IDMSK6	– IDMSK5
CANIDM4	C7h	CAN Identifier Mask byte 4(PartA) CAN Identifier Mask byte 4(PartB)	– IDMSK4	– IDMSK3	– IDMSK2	– IDMSK1	– IDMSK0	RTRMSK –	–	IDEMSK –

Table 10. Other SFRs

Mnemonic	Add	Name	7	6	5	4	3	2	1	0
PCON	87h	Power Control	SMOD1	SMOD0	–	POF	GF1	GF0	PD	IDL
AUXR	8Eh	Auxiliary Register 0	–	–	M0	–	XRS1	XRS2	EXTRAM	A0
AUXR1	A2h	Auxiliary Register 1	–	–	ENBOOT	–	GF3	0	–	DPS
CKCON	8Fh	Clock Control	CANX2	WDX2	PCAX2	SIX2	T2X2	T1X2	T0X2	X2

Table 10. Other SFRs

Mnemonic	Add	Name	7	6	5	4	3	2	1	0
FCON	D1h	Flash Control	FPL3	FPL2	FPL1	FPL0	FPS	FMOD1	FMOD0	FBUSY
EECON	D2h	EEPROM Contol	EEPL3	EEPL2	EEPL1	EEPL0	–	–	EEE	EEBUSY

Table 11. SFR Mapping

	0/8[1]	1/9	2/A	3/B	4/C	5/D	6/E	7/F	
F8h	IPL1 xxxx x000	CH 0000 0000	CCAP0H 0000 0000	CCAP1H 0000 0000	CCAP2H 0000 0000	CCAP3H 0000 0000	CCAP4H 0000 0000		FFh
F0h	B 0000 0000		ADCLK xxx0 0000	ADCON x000 0000	ADDL 0000 0000	ADDH 0000 0000	ADCF 0000 0000	IPH1 xxxx x000	F7h
E8h	IEN1 xxxx x000	CL 0000 0000	CCAP0L 0000 0000	CCAP1L 0000 0000	CCAP2L 0000 0000	CCAP3L 0000 0000	CCAP4L 0000 0000		EFh
E0h	ACC 0000 0000								E7h
D8h	CCON 00x0 0000	CMOD 00xx x000	CCAPM0 x000 0000	CCAPM1 x000 0000	CCAPM2 x000 0000	CCAPM3 x000 0000	CCAPM4 x000 0000		DFh
D0h	PSW 0000 0000	FCON 0000 0000	EECON xxxx xx00						D7h
C8h	T2CON 0000 0000	T2MOD xxxx xx00	RCAP2L 0000 0000	RCAP2H 0000 0000	TL2 0000 0000	TH2 0000 0000	CANEN1 x000 0000	CANEN2 0000 0000	CFh
C0h	P4 xxxx xx11	CANGIE 1100 0000	CANIE1 x000 0000	CANIE2 0000 0000	CANIDM1 xxxx xxxx	CANIDM2 xxxx xxxx	CANIDM3 xxxx xxxx	CANIDM4 xxxx xxxx	C7h
B8h	IPL0 x000 0000	SADEN 0000 0000	CANSIT1 x000 0000	CANSIT2 0000 0000	CANIDT1 xxxx xxxx	CANIDT2 xxxx xxxx	CANIDT3 xxxx xxxx	CANIDT4 xxxx xxxx	BFh
B0h	P3 1111 1111	CANPAGE 0000 0000	CANSTCH xxxx xxxx	CANCONCH xxxx xxxx	CANBT1 xxxx xxxx	CANBT2 xxxx xxxx	CANBT3 xxxx xxxx	IPH0 x000 0000	B7h
A8h	IEN0 0000 0000	SADDR 0000 0000	CANGSTA 1010 0000	CANGCON 0000 0000	CANTIML 0000 0000	CANTIMH 0000 0000	CANSTMPL xxxx xxxx	CANSTMPH xxxx xxxx	AFh
A0h	P2 1111 1111	CANTCON 0000 0000	AUXR1 xxxx 00x0	CANMSG xxxx xxxx	CANTTCL 0000 0000	CANTTCH 0000 0000	WDTRST 1111 1111	WDTPRG xxxx x000	A7h
98h	SCON 0000 0000	SBUF 0000 0000		CANGIT 0x00 0000	CANTEC 0000 0000	CANREC 0000 0000			9Fh
90h	P1 1111 1111								97h
88h	TCON 0000 0000	TMOD 0000 0000	TL0 0000 0000	TL1 0000 0000	TH0 0000 0000	TH1 0000 0000	AUXR x00x 1100	CKCON 0000 0000	8Fh
80h	P0 1111 1111	SP 0000 0111	DPL 0000 0000	DPH 0000 0000				PCON 00x1 0000	87h
	0/8[1]	1/9	2/A	3/B	4/C	5/D	6/E	7/F	

Reserved

Note: 1. These registers are bit–addressable.
Sixteen addresses in the SFR space are both byte–addressable and bit–addressable. The bit–addressable SFR's are those whose address ends in 0 and 8. The bit addresses, in this area, are 0x80 through to 0xFF.

Clock

The T89C51CC01 core needs only 6 clock periods per machine cycle. This feature, called ”X2”, provides the following advantages:

- Divides frequency crystals by 2 (cheaper crystals) while keeping the same CPU power.
- Saves power consumption while keeping the same CPU power (oscillator power saving).
- Saves power consumption by dividing dynamic operating frequency by 2 in operating and idle modes.
- Increases CPU power by 2 while keeping the same crystal frequency.

In order to keep the original C51 compatibility, a divider-by-2 is inserted between the XTAL1 signal and the main clock input of the core (phase generator). This divider may be disabled by the software.

An extra feature is available to start after Reset in the X2 mode. This feature can be enabled by a bit X2B in the Hardware Security Byte. This bit is described in the section "In-System-Programming".

Description

The X2 bit in the CKCON register (see Table 12) allows switching from 12 clock cycles per instruction to 6 clock cycles and vice versa. At reset, the standard speed is activated (STD mode).

Setting this bit activates the X2 feature (X2 mode) for the CPU Clock only (see Figure 5.).

The Timers 0, 1 and 2, Uart, PCA, Watchdog or CAN switch in X2 mode only if the corresponding bit is cleared in the CKCON register.

The clock for the whole circuit and peripheral is first divided by two before being used by the CPU core and peripherals. This allows any cyclic ratio to be accepted on the XTAL1 input. In X2 mode, as this divider is bypassed, the signals on XTAL1 must have a cyclic ratio between 40 to 60%. Figure 5. shows the clock generation block diagram. The X2 bit is validated on the XTAL1÷2 rising edge to avoid glitches when switching from the X2 to the STD mode. Figure 6 shows the mode switching waveforms.

Figure 5. Clock CPU Generation Diagram

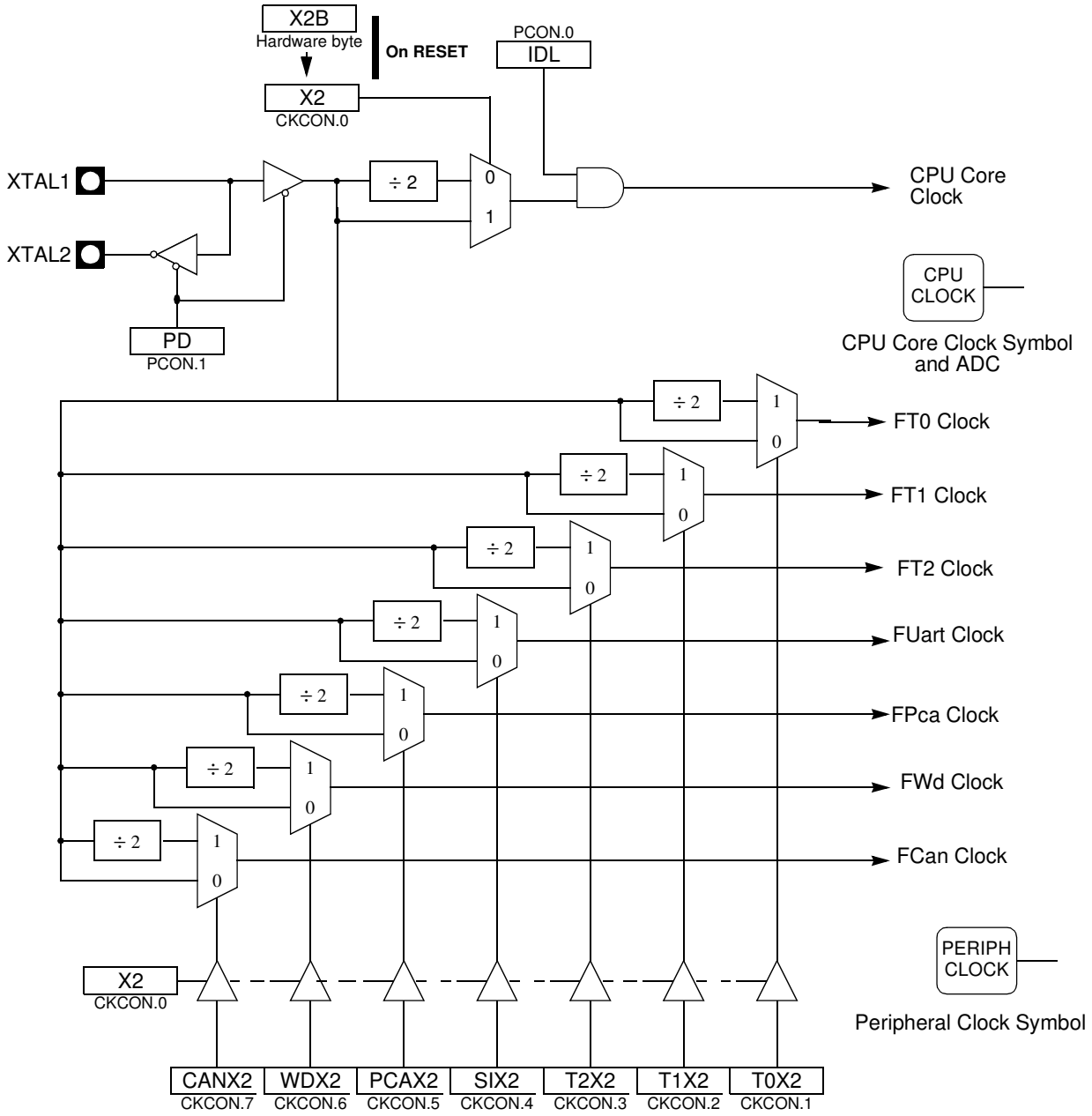

Figure 6. Mode Switching Waveforms

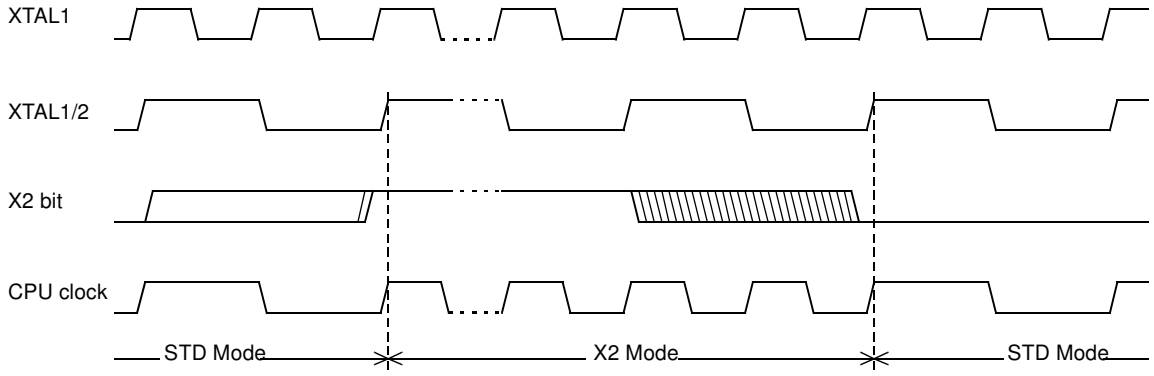

Note: In order to prevent any incorrect operation while operating in the X2 mode, users must be aware that all peripherals using the clock frequency as a time reference (UART, timers...) will have their time reference divided by two. For example a free running timer generating an interrupt every 20 ms will then generate an interrupt every 10 ms. A UART with a 4800 baud rate will have a 9600 baud rate.

Register

Table 12. CKCON Register

CKCON (S:8Fh)
Clock Control Register

7	6	5	4	3	2	1	0
CANX2	WDX2	PCAX2	SIX2	T2X2	T1X2	T0X2	X2

Bit Number	Bit Mnemonic	Description
7	CANX2	**CAN clock** (1) Clear to select 6 clock periods per peripheral clock cycle. Set to select 12 clock periods per peripheral clock cycle.
6	WDX2	**Watchdog clock** (1) Clear to select 6 clock periods per peripheral clock cycle. Set to select 12 clock periods per peripheral clock cycle.
5	PCAX2	**Programmable Counter Array clock** (1) Clear to select 6 clock periods per peripheral clock cycle. Set to select 12 clock periods per peripheral clock cycle.
4	SIX2	**Enhanced UART clock (MODE 0 and 2)** (1) Clear to select 6 clock periods per peripheral clock cycle. Set to select 12 clock periods per peripheral clock cycle.
3	T2X2	**Timer 2 clock** (1) Clear to select 6 clock periods per peripheral clock cycle. Set to select 12 clock periods per peripheral clock cycle.
2	T1X2	**Timer 1 clock** (1) Clear to select 6 clock periods per peripheral clock cycle. Set to select 12 clock periods per peripheral clock cycle.
1	T0X2	**Timer 0 clock** (1) Clear to select 6 clock periods per peripheral clock cycle. Set to select 12 clock periods per peripheral clock cycle.
0	X2	**CPU clock** Clear to select 12 clock periods per machine cycle (STD mode) for CPU and all the peripherals. Set to select 6 clock periods per machine cycle (X2 mode) and to enable the individual peripherals "X2"bits.

Note: 1. This control bit is validated when the CPU clock bit X2 is set; when X2 is low, this bit has no effect.

Reset Value = 0000 0000b

Power Management

Two power reduction modes are implemented in the T89C51CC01: the Idle mode and the Power-down mode. These modes are detailed in the following sections. In addition to these power reduction modes, the clocks of the core and peripherals can be dynamically divided by 2 using the X2 Mode detailed in Section “Clock”.

Reset Pin

In order to start-up (cold reset) or to restart (warm reset) properly the microcontroller, a high level has to be applied on the RST pin. A bad level leads to a wrong initialisation of the internal registers like SFRs, PC, etc. and to unpredictable behavior of the microcontroller. A warm reset can be applied either directly on the RST pin or indirectly by an internal reset source such as a watchdog, PCA, timer, etc.

At Power-up (Cold Reset)

Two conditions are required before enabling a CPU start-up:

- VDD must reach the specified VDD range,
- The level on xtal1 input must be outside the specification (VIH, VIL).

If one of these two conditions are not met, the microcontroller does not start correctly and can execute an instruction fetch from anywhere in the program space. An active level applied on the RST pin must be maintained until both of the above conditions are met. A reset is active when the level VIH1 is reached and when the pulse width covers the period of time where VDD and the oscillator are not stabilized. Two parameters have to be taken into account to determine the reset pulse width:

- VDD rise time (vddrst),
- Oscillator startup time (oscrst).

To determine the capacitor the highest value of these two parameters has to be chosen. The reset circuitry is shown in Figure 7.

Figure 7. Reset Circuitry

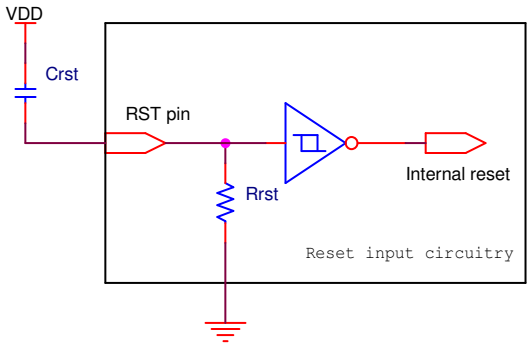

0

Table 13 and Table 15 give some typical examples for three values of VDD rise times, two values of oscillator start-up time and two pull-down resistor values.

Table 13. Minimum Reset Capacitor for a 15k Pull-down Resistor

oscrst/vddrst	1ms	10ms	100ms
5ms	2.7µF	4.7µF	47µF
20ms	10µF	15µF	47µF

Note: These values assume VDD starts from 0v to the nominal value. If the time between two on/off sequences is too fast, the power-supply de coupling capacitors may not be fully discharged, leading to a bad reset sequence.

Warm Reset

To achieve a valid reset, the reset signal must be maintained for at least 2 machine cycles (24 oscillator clock periods) while the oscillator is running. The number of clock periods is mode independent (X2 or X1).

Watchdog Reset

As detailed in Section “PCA Watchdog Timer”, page 123, the WDT generates a 96-clock period pulse on the RST pin. In order to properly propagate this pulse to the rest of the application in case of external capacitor or power-supply supervisor circuit, a 1KΩ resistor must be added as shown Figure 8.

Figure 8. Reset Circuitry for WDT reset out usage

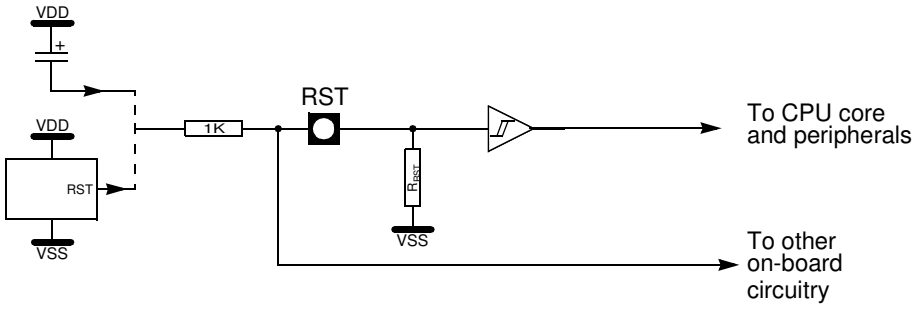

Reset Recommendation to Prevent Flash Corruption

An example of bad initialization situation may occur in an instance where the bit ENBOOT in AUXR1 register is initialized from the hardware bit BLJB upon reset. Since this bit allows mapping of the bootloader in the code area, a reset failure can be critical.

If one wants the ENBOOT cleared in order to unmap the boot from the code area (yet due to a bad reset) the bit ENBOOT in SFRs may be set. If the value of Program Counter is accidently in the range of the boot memory addresses then a flash access (write or erase) may corrupt the Flash on-chip memory.

It is recommended to use an external reset circuitry featuring power supply monitoring to prevent system malfunction during periods of insufficient power supply voltage (power supply failure, power supply switched off).

Idle Mode

Idle mode is a power reduction mode that reduces the power consumption. In this mode, program execution halts. Idle mode freezes the clock to the CPU at known states while the peripherals continue to be clocked. The CPU status before entering Idle mode is preserved, i.e., the program counter and program status word register retain their data for the duration of Idle mode. The contents of the SFRs and RAM are also retained. The status of the Port pins during Idle mode is detailed in Table 14.

Entering Idle Mode

To enter Idle mode, you must set the IDL bit in PCON register (see Table 15). The T89C51CC01 enters Idle mode upon execution of the instruction that sets IDL bit. The instruction that sets IDL bit is the last instruction executed.

Note: If IDL bit and PD bit are set simultaneously, the T89C51CC01 enters Power-down mode. Then it does not go in Idle mode when exiting Power-down mode.

Exiting Idle Mode

There are two ways to exit Idle mode:

1. Generate an enabled interrupt.
   – Hardware clears IDL bit in PCON register which restores the clock to the CPU. Execution resumes with the interrupt service routine. Upon completion

of the interrupt service routine, program execution resumes with the instruction immediately following the instruction that activated Idle mode. The general-purpose flags (GF1 and GF0 in PCON register) may be used to indicate whether an interrupt occurred during normal operation or during Idle mode. When Idle mode is exited by an interrupt, the interrupt service routine may examine GF1 and GF0.

2. Generate a reset.
   – A logic high on the RST pin clears IDL bit in PCON register directly and asynchronously. This restores the clock to the CPU. Program execution momentarily resumes with the instruction immediately following the instruction that activated the Idle mode and may continue for a number of clock cycles before the internal reset algorithm takes control. Reset initializes the T89C51CC01 and vectors the CPU to address C:0000h.

Note:
1. During the time that execution resumes, the internal RAM cannot be accessed; however, it is possible for the Port pins to be accessed. To avoid unexpected outputs at the Port pins, the instruction immediately following the instruction that activated Idle mode should not write to a Port pin or to the external RAM.
2. If Idle mode is invoked by ADC Idle, the ADC conversion completion will exit Idle.

Power-down Mode

The Power-down mode places the T89C51CC01 in a very low power state. Power-down mode stops the oscillator and freezes all clocks at known states. The CPU status prior to entering Power-down mode is preserved, i.e., the program counter, program status word register retain their data for the duration of Power-down mode. In addition, the SFRs and RAM contents are preserved. The status of the Port pins during Power-down mode is detailed in Table 14.

Entering Power-down Mode

To enter Power-down mode, set PD bit in PCON register. The T89C51CC01 enters the Power-down mode upon execution of the instruction that sets PD bit. The instruction that sets PD bit is the last instruction executed.

Exiting Power-down Mode

If VDD was reduced during the Power-down mode, do not exit Power-down mode until VDD is restored to the normal operating level.

There are two ways to exit the Power-down mode:

1. Generate an enabled external interrupt.
   – The T89C51CC01 provides capability to exit from Power-down using INT0#, INT1#.
   Hardware clears PD bit in PCON register which starts the oscillator and restores the clocks to the CPU and peripherals. Using INTx# input, execution resumes when the input is released (see Figure 9) while using KINx input, execution resumes after counting 1024 clock ensuring the oscillator is restarted properly (see Figure 8). Execution resumes with the interrupt service routine. Upon completion of the interrupt service routine, program execution resumes with the instruction immediately following the instruction that activated Power-down mode.

Note:
1. The external interrupt used to exit Power-down mode must be configured as level sensitive (INT0# and INT1#) and must be assigned the highest priority. In addition, the duration of the interrupt must be long enough to allow the oscillator to stabilize. The execution will only resume when the interrupt is deasserted.
2. Exit from power-down by external interrupt does not affect the SFRs nor the internal RAM content.

Figure 9. Power-down Exit Waveform Using INT1:0#

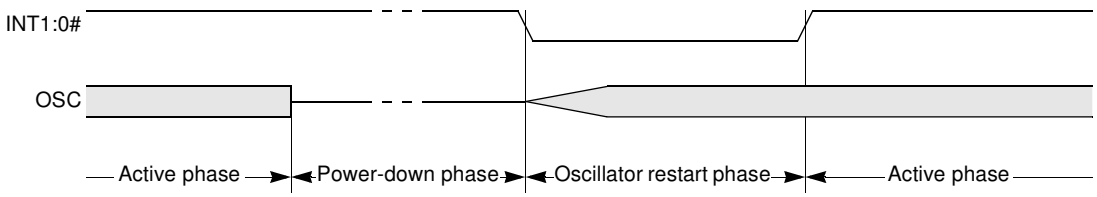

2. Generate a reset.
   – A logic high on the RST pin clears PD bit in PCON register directly and asynchronously. This starts the oscillator and restores the clock to the CPU and peripherals. Program execution momentarily resumes with the instruction immediately following the instruction that activated Power-down mode and may continue for a number of clock cycles before the internal reset algorithm takes control. Reset initializes the T89C51CC01 and vectors the CPU to address 0000h.

Notes: 1. During the time that execution resumes, the internal RAM cannot be accessed; however, it is possible for the Port pins to be accessed. To avoid unexpected outputs at the Port pins, the instruction immediately following the instruction that activated the Power-down mode should not write to a Port pin or to the external RAM.
2. Exit from power-down by reset redefines all the SFRs, but does not affect the internal RAM content.

Table 14. Pin Conditions in Special Operating Modes

Mode	Port 0	Port 1	Port 2	Port 3	Port 4	ALE	PSEN#
Reset	Floating	High	High	High	High	High	High
Idle (internal code)	Data	Data	Data	Data	Data	High	High
Idle (external code)	Floating	Data	Data	Data	Data	High	High
Power-Down(internal code)	Data	Data	Data	Data	Data	Low	Low
Power-Down (external code)	Floating	Data	Data	Data	Data	Low	Low

3.

Registers

Table 15. PCON Register

PCON (S:87h) – Power configuration Register

7	6	5	4	3	2	1	0
SMOD1	**SMOD0**	**-**	**POF**	**GF1**	**GF0**	**PD**	**IDL**

Bit Number	Bit Mnemonic	Description
7	SMOD1	**Serial port Mode bit 1** Set to select double baud rate in mode 1, 2 or 3
6	SMOD0	**Serial port Mode bit 0** Clear to select SM0 bit in SCON register. Set to select FE bit in SCON register.
5	-	**Reserved** The value read from this bit is indeterminate. Do not set this bit.
4	POF	**Power-Off Flag** Clear to recognize next reset type. Set by hardware when V_{cc} rises from 0 to its nominal voltage. Can also be set by software.
3	GF1	**General-purpose flag 1** One use is to indicate whether an interrupt occurred during normal operation or during Idle mode.
2	GF0	**General-purpose flag 0** One use is to indicate whether an interrupt occurred during normal operation or during Idle mode.
1	PD	**Power-down Mode bit** Cleared by hardware when an interrupt or reset occurs. Set to activate the Power-down mode. If IDL and PD are both set, PD takes precedence.
0	IDL	**Idle Mode bit** Cleared by hardware when an interrupt or reset occurs. Set to activate the Idle mode. If IDL and PD are both set, PD takes precedence.

Reset Value = 00X1 0000b

Data Memory

The T89C51CC01 provides data memory access in two different spaces:

1. The internal space mapped in three separate segments:
   - the lower 128 Bytes RAM segment.
   - the upper 128 Bytes RAM segment.
   - the expanded 1024 Bytes RAM segment (XRAM).
2. The external space.

A fourth internal segment is available but dedicated to Special Function Registers, SFRs, (addresses 80h to FFh) accessible by direct addressing mode.

Figure 11 shows the internal and external data memory spaces organization.

Figure 10. Internal Memory - RAM

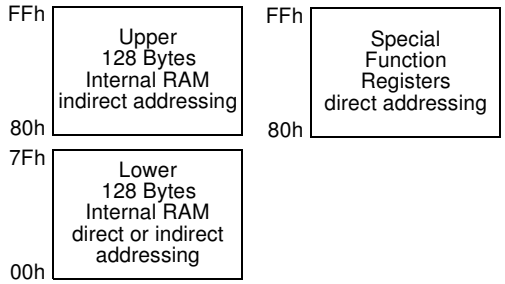

Figure 11. Internal and External Data Memory Organization XRAM-XRAM

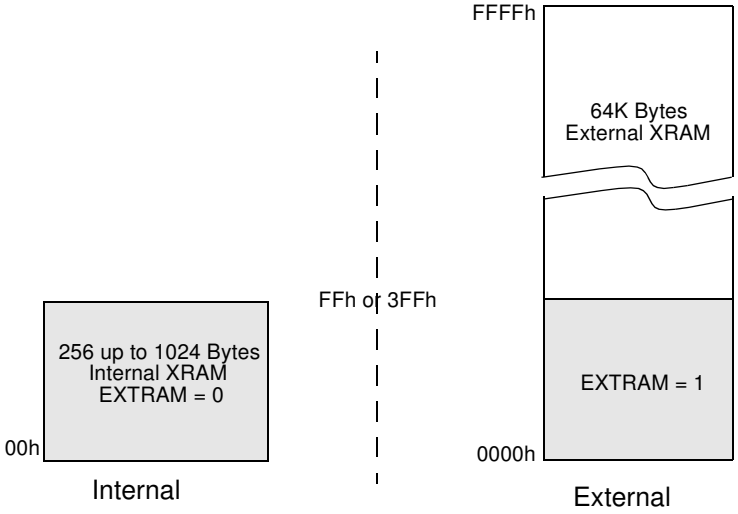

Internal Space

Lower 128 Bytes RAM

The lower 128 Bytes of RAM (see Figure 11) are accessible from address 00h to 7Fh using direct or indirect addressing modes. The lowest 32 Bytes are grouped into 4 banks of 8 registers (R0 to R7). Two bits RS0 and RS1 in PSW register (see Figure 18) select which bank is in use according to Table 16. This allows more efficient use of code space, since register instructions are shorter than instructions that use direct addressing, and can be used for context switching in interrupt service routines.

Table 16. Register Bank Selection

RS1	RS0	Description
0	0	Register bank 0 from 00h to 07h
0	1	Register bank 0 from 08h to 0Fh
1	0	Register bank 0 from 10h to 17h
1	1	Register bank 0 from 18h to 1Fh

The next 16 Bytes above the register banks form a block of bit-addressable memory space. The C51 instruction set includes a wide selection of single-bit instructions, and the 128 bits in this area can be directly addressed by these instructions. The bit addresses in this area are 00h to 7Fh.

Figure 12. Lower 128 Bytes Internal RAM Organization

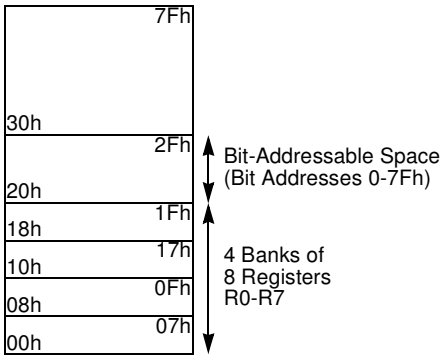

Upper 128 Bytes RAM

The upper 128 Bytes of RAM are accessible from address 80h to FFh using only indirect addressing mode.

Expanded RAM

The on-chip 1024 Bytes of expanded RAM (XRAM) are accessible from address 0000h to 03FFh using indirect addressing mode through MOVX instructions. In this address range, the bit EXTRAM in AUXR register is used to select the XRAM (default) or the XRAM. As shown in Figure 11 when EXTRAM = 0, the XRAM is selected and when EXTRAM = 1, the XRAM is selected.

The size of XRAM can be configured by XRS1-0 bit in AUXR register (default size is 1024 Bytes).

Note: Lower 128 Bytes RAM, Upper 128 Bytes RAM, and expanded RAM are made of volatile memory cells. This means that the RAM content is indeterminate after power-up and must then be initialized properly.

External Space

Memory Interface

The external memory interface comprises the external bus (port 0 and port 2) as well as the bus control signals ($\overline{RD}$, $\overline{WR}$, and ALE).

Figure 13 shows the structure of the external address bus. P0 carries address A7:0 while P2 carries address A15:8. Data D7:0 is multiplexed with A7:0 on P0. Table 17 describes the external memory interface signals.

Figure 13. External Data Memory Interface Structure

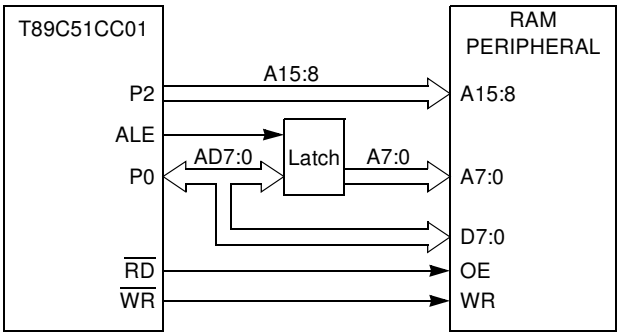

Table 17. External Data Memory Interface Signals

Signal Name	Type	Description	Alternative Function
A15:8	O	**Address Lines** Upper address lines for the external bus.	P2.7:0
AD7:0	I/O	**Address/Data Lines** Multiplexed lower address lines and data for the external memory.	P0.7:0
ALE	O	**Address Latch Enable** ALE signals indicates that valid address information are available on lines AD7:0.	-
$\overline{RD}$	O	**Read** Read signal output to external data memory.	P3.7
$\overline{WR}$	O	**Write** Write signal output to external memory.	P3.6

External Bus Cycles

This section describes the bus cycles the T89C51CC01 executes to read (see Figure 14), and write data (see Figure 15) in the external data memory.
External memory cycle takes 6 CPU clock periods. This is equivalent to 12 oscillator clock period in standard mode or 6 oscillator clock periods in X2 mode. For further information on X2 mode.

Slow peripherals can be accessed by stretching the read and write cycles. This is done using the M0 bit in AUXR register. Setting this bit changes the width of the $\overline{RD}$ and $\overline{WR}$ signals from 3 to 15 CPU clock periods.

For simplicity, the accompanying figures depict the bus cycle waveforms in idealized form and do not provide precise timing information. For bus cycle timing parameters refer to the Section “AC Characteristics”.

Figure 14. External Data Read Waveforms

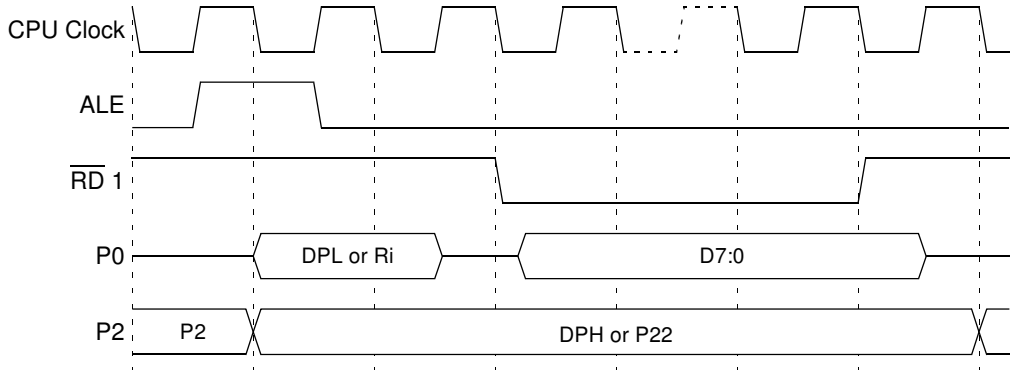

Notes: 1. $\overline{RD}$ signal may be stretched using M0 bit in AUXR register.
2. When executing MOVX @Ri instruction, P2 outputs SFR content.

Figure 15. External Data Write Waveforms

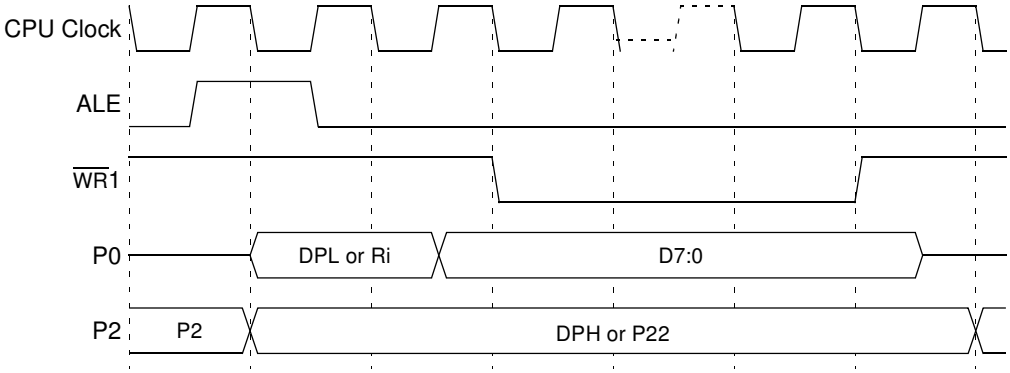

Notes: 1. $\overline{WR}$ signal may be stretched using M0 bit in AUXR register.
2. When executing MOVX @Ri instruction, P2 outputs SFR content.

Dual Data Pointer

Description

The T89C51CC01 implements a second data pointer for speeding up code execution and reducing code size in case of intensive usage of external memory accesses.
DPTR 0 and DPTR 1 are seen by the CPU as DPTR and are accessed using the SFR addresses 83h and 84h that are the DPH and DPL addresses. The DPS bit in AUXR1 register (see Figure 20) is used to select whether DPTR is the data pointer 0 or the data pointer 1 (see Figure 16).

Figure 16. Dual Data Pointer Implementation

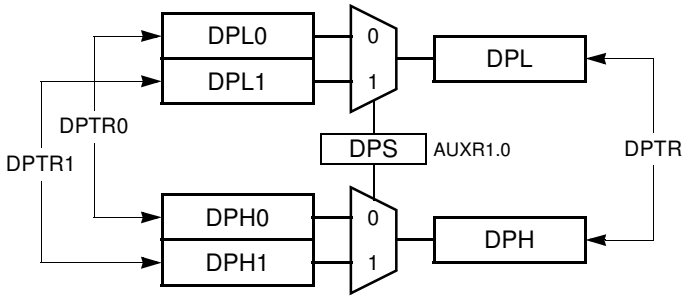

Application

Software can take advantage of the additional data pointers to both increase speed and reduce code size, for example, block operations (copy, compare…) are well served by using one data pointer as a “source” pointer and the other one as a “destination” pointer. Hereafter is an example of block move implementation using the two pointers and coded in assembler. The latest C compiler takes also advantage of this feature by providing enhanced algorithm libraries.

The INC instruction is a short (2 Bytes) and fast (6 machine cycle) way to manipulate the DPS bit in the AUXR1 register. However, note that the INC instruction does not directly force the DPS bit to a particular state, but simply toggles it. In simple routines, such as the block move example, only the fact that DPS is toggled in the proper sequence matters, not its actual value. In other words, the block move routine works the same whether DPS is '0' or '1' on entry.

```
; ASCII block move using dual data pointers
; Modifies DPTR0, DPTR1, A and PSW
; Ends when encountering NULL character
; Note: DPS exits opposite to the entry state unless an extra INC AUXR1 is
added

AUXR1EQU0A2h

move:movDPTR,#SOURCE ; address of SOURCE
  incAUXR1 ; switch data pointers
  movDPTR,#DEST ; address of DEST
mv_loop:incAUXR1; switch data pointers
  movxA,@DPTR; get a byte from SOURCE
  incDPTR; increment SOURCE address
  incAUXR1; switch data pointers
  movx@DPTR,A; write the byte to DEST
  incDPTR; increment DEST address
  jnzmv_loop; check for NULL terminator
end_move:
```

Registers

Table 18. PSW Register

PSW (S:D0h)
Program Status Word Register

7	6	5	4	3	2	1	0
CY	**AC**	**F0**	**RS1**	**RS0**	**OV**	**F1**	**P**

Bit Number	Bit Mnemonic	Description
7	CY	**Carry Flag** Carry out from bit 1 of ALU operands.
6	AC	**Auxiliary Carry Flag** Carry out from bit 1 of addition operands.
5	F0	**User Definable Flag 0.**
4-3	RS1:0	**Register Bank Select Bits** Refer to Table 16 for bits description.
2	OV	**Overflow Flag** Overflow set by arithmetic operations.
1	F1	**User Definable Flag 1**
0	P	**Parity Bit** Set when ACC contains an odd number of 1's. Cleared when ACC contains an even number of 1's.

Reset Value = 0000 0000b

Table 19. AUXR Register

AUXR (S:8Eh)
Auxiliary Register

7	6	5	4	3	2	1	0
-	**-**	**M0**	**-**	**XRS1**	**XRS0**	**EXTRAM**	**A0**

Bit Number	Bit Mnemonic	Description
7-6	-	**Reserved** The value read from these bits are indeterminate. Do not set this bit.
5	M0	**Stretch MOVX control:** the RD/ and the WR/ pulse length is increased according to the value of M0. **M0 Pulse length in clock period** 0 6 1 30
4	-	**Reserved** The value read from this bit is indeterminate. Do not set this bit.
3-2	XRS1-0	**XRAM size:** Accessible size of the XRAM **XRS 1:0 XRAM size** 0 0 256 Bytes 0 1 512 Bytes 1 0 768 Bytes 1 1 1024 Bytes (default)

Bit Number	Bit Mnemonic	Description
1	EXTRAM	**Internal/External RAM (00h - FFh)** access using MOVX @ Ri/@ DPTR 0 - Internal XRAM access using MOVX @ Ri/@ DPTR. 1 - External data memory access.
0	A0	**Disable/Enable ALE)** 0 - ALE is emitted at a constant rate of 1/6 the oscillator frequency (or 1/3 if X2 mode is used) 1 - ALE is active only during a MOVX or MOVC instruction.

Reset Value = X00X 1100b
Not bit addressable

Table 20. AUXR1 Register

AUXR1 (S:A2h)
Auxiliary Control Register 1

7	6	5	4	3	2	1	0
-	-	ENBOOT	-	GF3	0	-	DPS

Bit Number	Bit Mnemonic	Description
7-6	-	**Reserved** The value read from these bits is indeterminate. Do not set these bits.
5	ENBOOT(1)	**Enable Boot Flash** Set this bit for map the boot Flash between F800h -FFFFh Clear this bit for disable boot Flash.
4	-	**Reserved** The value read from this bit is indeterminate. Do not set this bit.
3	GF3	**General-purpose Flag 3**
2	0	**Always Zero** This bit is stuck to logic 0 to allow INC AUXR1 instruction without affecting GF3 flag.
1	-	**Reserved for Data Pointer Extension.**
0	DPS	**Data Pointer Select Bit** Set to select second dual data pointer: DPTR1. Clear to select first dual data pointer: DPTR0.

Reset Value = XXXX 00X0b

Note: 1. ENBOOT is initialized with the invert BLJB at reset. See In-System Programming section.

EEPROM Data Memory

The 2-Kbyte on-chip EEPROM memory block is located at addresses 0000h to 07FFh of the XRAM/XRAM memory space and is selected by setting control bits in the EECON register. A read in the EEPROM memory is done with a MOVX instruction.

A physical write in the EEPROM memory is done in two steps: write data in the column latches and transfer of all data latches into an EEPROM memory row (programming).

The number of data written on the page may vary from 1 up to 128 Bytes (the page size). When programming, only the data written in the column latch is programmed and a ninth bit is used to obtain this feature. This provides the capability to program the whole memory by Bytes, by page or by a number of Bytes in a page. Indeed, each ninth bit is set when the writing the corresponding byte in a row and all these ninth bits are reset after the writing of the complete EEPROM row.

Write Data in the Column Latches

Data is written by byte to the column latches as for an external RAM memory. Out of the 11 address bits of the data pointer, the 4 MSBs are used for page selection (row) and 7 are used for byte selection. Between two EEPROM programming sessions, all the addresses in the column latches must stay on the same page, meaning that the 4 MSB must no be changed.

The following procedure is used to write to the column latches:

- Save and disable interrupt.
- Set bit EEE of EECON register
- Load DPTR with the address to write
- Store A register with the data to be written
- Execute a MOVX @DPTR, A
- If needed loop the three last instructions until the end of a 128 Bytes page
- Restore interrupt.

Note: The last page address used when loading the column latch is the one used to select the page programming address.

Programming

The EEPROM programming consists of the following actions:

- writing one or more Bytes of one page in the column latches. Normally, all Bytes must belong to the same page; if not, the last page address will be latched and the others discarded.
- launching programming by writing the control sequence (50h followed by A0h) to the EECON register.
- EEBUSY flag in EECON is then set by hardware to indicate that programming is in progress and that the EEPROM segment is not available for reading.
- The end of programming is indicated by a hardware clear of the EEBUSY flag.

Note: The sequence 5xh and Axh must be executed without instructions between then otherwise the programming is aborted.

Read Data

The following procedure is used to read the data stored in the EEPROM memory:

- Save and disable interrupt
- Set bit EEE of EECON register
- Load DPTR with the address to read
- Execute a MOVX A, @DPTR
- Restore interrupt

Examples

```
;*F*************************************************************************
;* NAME: api_rd_eeprom_byte
;* DPTR contain address to read.
;* Acc contain the reading value
;* NOTE: before execute this function, be sure the EEPROM is not BUSY
;*************************************************************************
api_rd_eeprom_byte:
; Save and clear EA
 MOV   EECON, #02h; map EEPROM in XRAM space
 MOVX A, @DPTR
 MOV   EECON, #00h; unmap EEPROM
; Restore EA
ret

;*F*************************************************************************
;* NAME: api_ld_eeprom_cl
;* DPTR contain address to load
;* Acc contain value to load
;* NOTE: in this example we load only 1 byte, but it is possible upto
;* 128 Bytes.
;* before execute this function, be sure the EEPROM is not BUSY
;*************************************************************************
api_ld_eeprom_cl:
; Save and clear EA
 MOV   EECON, #02h ; map EEPROM in XRAM space
 MOVX @DPTR, A
 MOVEECON, #00h; unmap EEPROM
; Restore EA
ret

;*F*************************************************************************
;* NAME: api_wr_eeprom
;* NOTE: before execute this function, be sure the EEPROM is not BUSY
;*************************************************************************
api_wr_eeprom:
; Save and clear EA
 MOV   EECON, #050h
 MOV   EECON, #0A0h
; Restore EA
ret
```

Registers

Table 21. EECON Register

EECON (S:0D2h)
EEPROM Control Register

7	6	5	4	3	2	1	0
EEPL3	**EEPL2**	**EEPL1**	**EEPL0**	**-**	**-**	**EEE**	**EEBUSY**

Bit Number	Bit Mnemonic	Description
7-4	EEPL3-0	**Programming Launch command bits** Write 5Xh followed by AXh to EEPL to launch the programming.
3	-	**Reserved** The value read from this bit is indeterminate. Do not set this bit.
2	-	**Reserved** The value read from this bit is indeterminate. Do not set this bit.
1	EEE	**Enable EEPROM Space bit** Set to map the EEPROM space during MOVX instructions (Write in the column latches) Clear to map the XRAM space during MOVX.
0	EEBUSY	**Programming Busy flag** Set by hardware when programming is in progress. Cleared by hardware when programming is done. Can not be set or cleared by software.

Reset Value = XXXX XX00b
Not bit addressable

Program/Code Memory

The T89C51CC01 implement 32K Bytes of on-chip program/code memory. Figure 17 shows the partitioning of internal and external program/code memory spaces depending on the product.

The Flash memory increases EPROM and ROM functionality by in-circuit electrical erasure and programming. Thanks to the internal charge pump, the high voltage needed for programming or erasing Flash cells is generated on-chip using the standard VDD voltage. Thus, the Flash Memory can be programmed using only one voltage and allows In-System-Programming commonly known as ISP. Hardware programming mode is also available using specific programming tool.

Figure 17. Program/Code Memory Organization

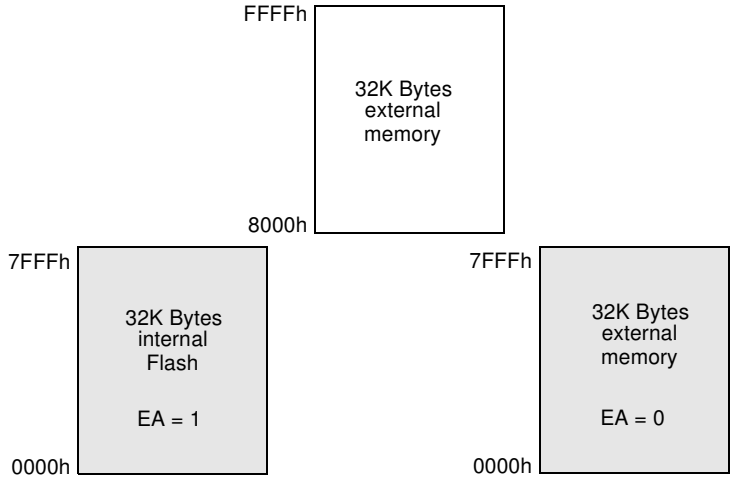

Notes: 1. If the program executes exclusively from on-chip code memory (not from external memory), beware of executing code from the upper byte of on-chip memory (7FFFh) and thereby disrupt I/O Ports 0 and 2 due to external prefetch. Fetching code constant from this location does not affect Ports 0 and 2.

2. Default factory programmed parts come with maximum hardware protection. Execution from external memory is not possible unless the Hardware Security Byte is reprogrammed. See Table 27.

17.22 External Code Memory Access

Memory Interface

The external memory interface comprises the external bus (port 0 and port 2) as well as the bus control signals (PSEN#, and ALE).

Figure 18 shows the structure of the external address bus. P0 carries address A7:0 while P2 carries address A15:8. Data D7:0 is multiplexed with A7:0 on P0. Table 18 describes the external memory interface signals.

Figure 18. External Code Memory Interface Structure

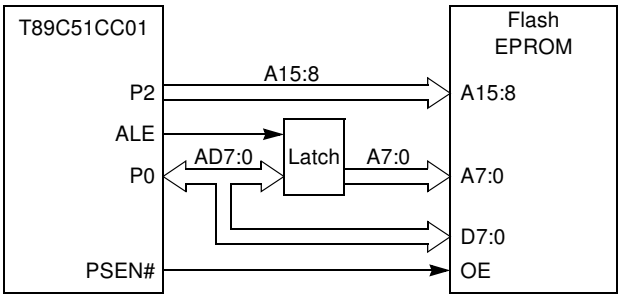

Table 23. External Code Memory Interface Signals

Signal Name	Type	Description	Alternate Function
A15:8	O	**Address Lines** Upper address lines for the external bus.	P2.7:0
AD7:0	I/O	**Address/Data Lines** Multiplexed lower address lines and data for the external memory.	P0.7:0
ALE	O	**Address Latch Enable** ALE signals indicates that valid address information are available on lines AD7:0.	-
PSEN#	O	**Program Store Enable Output** This signal is active low during external code fetch or external code read (MOVC instruction).	-

External Bus Cycles

This section describes the bus cycles the T89C51CC01 executes to fetch code (see Figure 19) in the external program/code memory.

External memory cycle takes 6 CPU clock periods. This is equivalent to 12 oscillator clock period in standard mode or 6 oscillator clock periods in X2 mode. For further information on X2 mode see section “Clock “.

For simplicity, the accompanying figure depicts the bus cycle waveforms in idealized form and do not provide precise timing information.

For bus cycling parameters refer to the ‘AC-DC parameters’ section.

Figure 19. External Code Fetch Waveforms

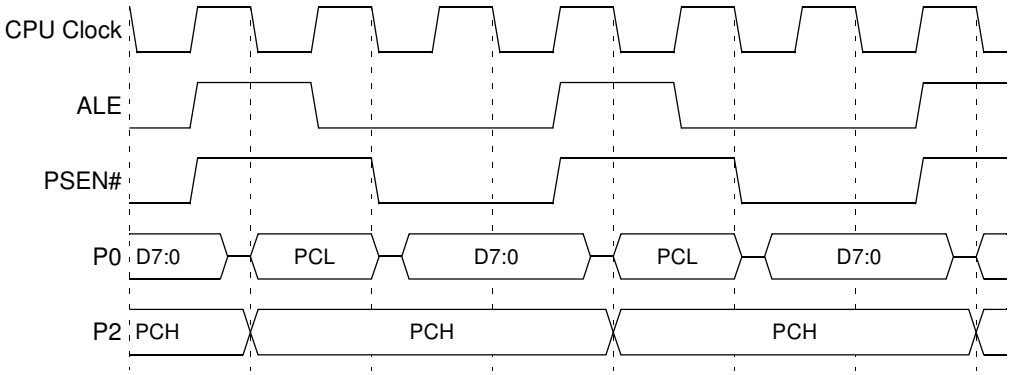

Flash Memory Architecture

T89C51CC01 features two on-chip Flash memories:

- Flash memory FM0:
  containing 32K Bytes of program memory (user space) organized into 128 byte pages,
- Flash memory FM1:
  2K Bytes for boot loader and Application Programming Interfaces (API).

The FM0 can be program by both parallel programming and Serial In-System-Programming (ISP) whereas FM1 supports only parallel programming by programmers. The ISP mode is detailed in the "In-System-Programming" section.

All Read/Write access operations on Flash Memory by user application are managed by a set of API described in the "In-System-Programming" section.

Figure 20. Flash Memory Architecture

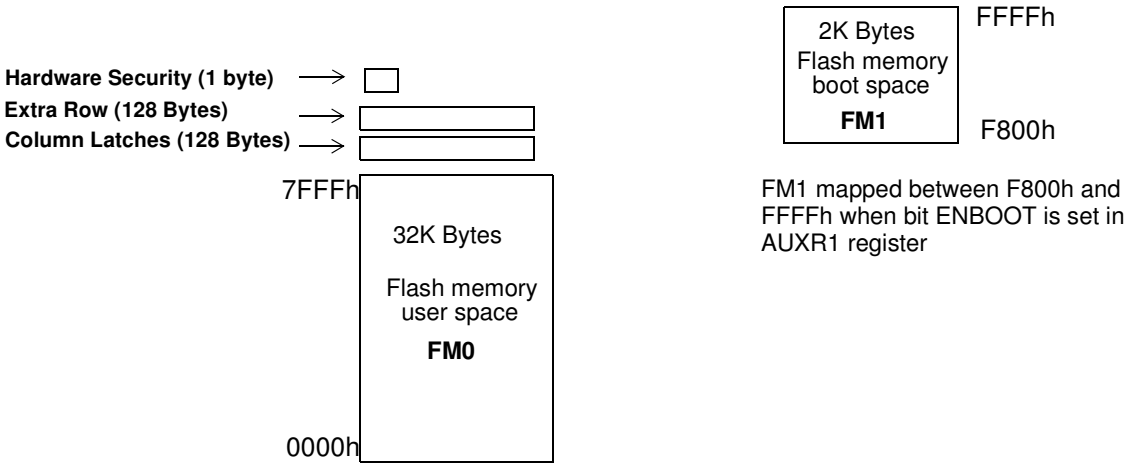

FM0 Memory Architecture

The Flash memory is made up of 4 blocks (see Figure 20):

- The memory array (user space) 32K Bytes
- The Extra Row
- The Hardware security bits
- The column latch registers

User Space

This space is composed of a 32K Bytes Flash memory organized in 256 pages of 128 Bytes. It contains the user's application code.

Extra Row (XRow)

This row is a part of FM0 and has a size of 128 Bytes. The extra row may contain information for boot loader usage.

Hardware Security Byte

The Hardware security Byte space is a part of FM0 and has a size of 1 byte.
The 4 MSB can be read/written by software, the 4 LSB can only be read by software and written by hardware in parallel mode.

Column Latches

The column latches, also part of FM0, have a size of full page (128 Bytes).
The column latches are the entrance buffers of the three previous memory locations (user array, XROW and Hardware security byte).

Cross Flash Memory Access Description

The FM0 memory can be program only from FM1. Programming FM0 from FM0 or from external memory is impossible.

The FM1 memory can be program only by parallel programming.

The Table 24 show all software Flash access allowed.

Table 24. Cross Flash Memory Access

		Action	FM0 (user Flash)	FM1 (boot Flash)
Code executing from	FM0 (user Flash)	Read	ok	-
		Load column latch	ok	-
		Write	-	-
	FM1 (boot Flash)	Read	ok	ok
		Load column latch	ok	-
		Write	ok	-
	External memory EA = 0	Read	-	-
		Load column latch	-	-
		Write	-	-

Overview of FM0 Operations

The CPU interfaces to the Flash memory through the FCON register and AUXR1 register.

These registers are used to:

- Map the memory spaces in the adressable space
- Launch the programming of the memory spaces
- Get the status of the Flash memory (busy/not busy)

Mapping of the Memory Space

By default, the user space is accessed by MOVC instruction for read only. The column latches space is made accessible by setting the FPS bit in FCON register. Writing is possible from 0000h to 7FFFh, address bits 6 to 0 are used to select an address within a page while bits 14 to 7 are used to select the programming address of the page.
Setting FPS bit takes precedence on the EXTRAM bit in AUXR register.

The other memory spaces (user, extra row, hardware security) are made accessible in the code segment by programming bits FMOD0 and FMOD1 in FCON register in accordance with Table 25. A MOVC instruction is then used for reading these spaces.

Table 25. FM0 Blocks Select Bits

FMOD1	FMOD0	FM0 Adressable space
0	0	User (0000h-7FFFh)
0	1	Extra Row(FF80h-FFFFh)
1	0	Hardware Security Byte (0000h)
1	1	Reserved

Launching Programming

FPL3:0 bits in FCON register are used to secure the launch of programming. A specific sequence must be written in these bits to unlock the write protection and to launch the programming. This sequence is 5xh followed by Axh. Table 26 summarizes the memory spaces to program according to FMOD1:0 bits.

Table 26. Programming Spaces

	Write to FCON				Operation
	FPL3:0	FPS	FMOD1	FMOD0	
User	5	X	0	0	No action
	A	X	0	0	Write the column latches in user space
Extra Row	5	X	0	1	No action
	A	X	0	1	Write the column latches in extra row space
Hardware Security Byte	5	X	1	0	No action
	A	X	1	0	Write the fuse bits space
Reserved	5	X	1	1	No action
	A	X	1	1	No action

Notes: 1. The sequence 5xh and Axh must be executing without instructions between them otherwise the programming is aborted.
2. Interrupts that may occur during programming time must be disabled to avoid any spurious exit of the programming mode.

Status of the Flash Memory

The bit FBUSY in FCON register is used to indicate the status of programming.

FBUSY is set when programming is in progress.

Selecting FM1

The bit ENBOOT in AUXR1 register is used to map FM1 from F800h to FFFFh.

Loading the Column Latches

Any number of data from 1 Byte to 128 Bytes can be loaded in the column latches. This provides the capability to program the whole memory by byte, by page or by any number of Bytes in a page.
When programming is launched, an automatic erase of the locations loaded in the column latches is first performed, then programming is effectively done. Thus no page or block erase is needed and only the loaded data are programmed in the corresponding page.

The following procedure is used to load the column latches and is summarized in Figure 21:

- Save then disable interrupt and map the column latch space by setting FPS bit.
- Load the DPTR with the address to load.
- Load Accumulator register with the data to load.
- Execute the MOVX @DPTR, A instruction.
- If needed loop the three last instructions until the page is completely loaded.
- Unmap the column latch and Restore Interrupt

Figure 21. Column Latches Loading Procedure

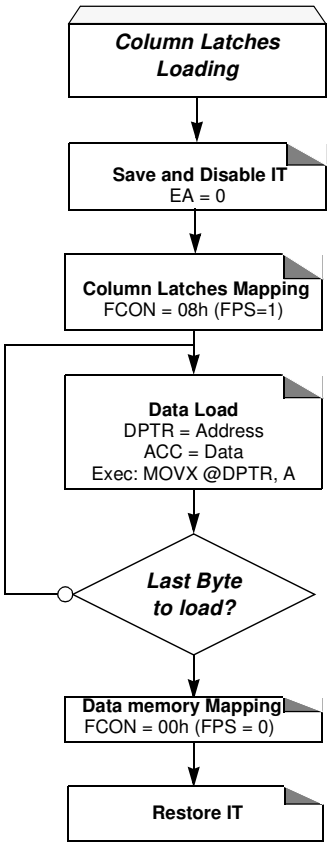

Note: The last page address used when loading the column latch is the one used to select the page programming address.

Programming the Flash Spaces

User

The following procedure is used to program the User space and is summarized in Figure 22:

- Load up to one page of data in the column latches from address 0000h to 7FFFh.
- Save then disable the interrupts.
- Launch the programming by writing the data sequence 50h followed by A0h in FCON register (only from FM1).
  The end of the programming indicated by the FBUSY flag cleared.
- Restore the interrupts.

Extra Row

The following procedure is used to program the Extra Row space and is summarized in Figure 22:

- Load data in the column latches from address FF80h to FFFFh.
- Save then disable the interrupts.
- Launch the programming by writing the data sequence 52h followed by A2h in FCON register. This step of the procedure must be executed from FM1. The end of the programming indicated by the FBUSY flag cleared.
  The end of the programming indicated by the FBUSY flag cleared.
- Restore the interrupts.

Figure 22. Flash and Extra Row Programming Procedure

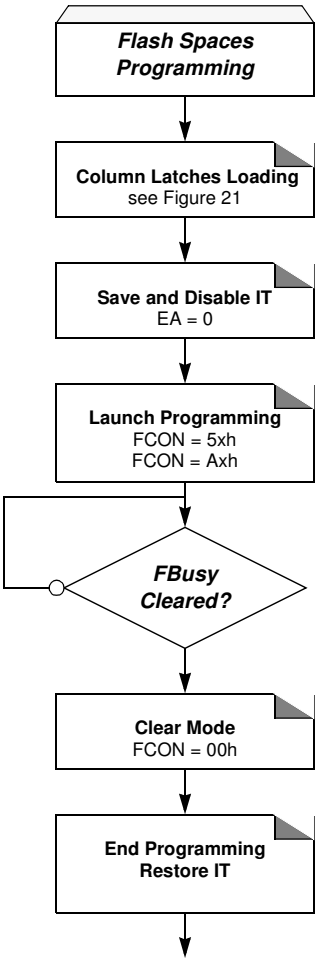

Hardware Security Byte

The following procedure is used to program the Hardware Security Byte space and is summarized in Figure 23:

- Set FPS and map Hardware byte (FCON = 0x0C)
- Save and disable the interrupts.
- Load DPTR at address 0000h.
- Load Accumulator register with the data to load.
- Execute the MOVX @DPTR, A instruction.
- Launch the programming by writing the data sequence 54h followed by A4h in FCON register. This step of the procedure must be executed from FM1. The end of the programming indicated by the FBUSY flag cleared.
  The end of the programming indicated by the FBusy flag cleared.
- Restore the interrupts.

Figure 23. Hardware Programming Procedure

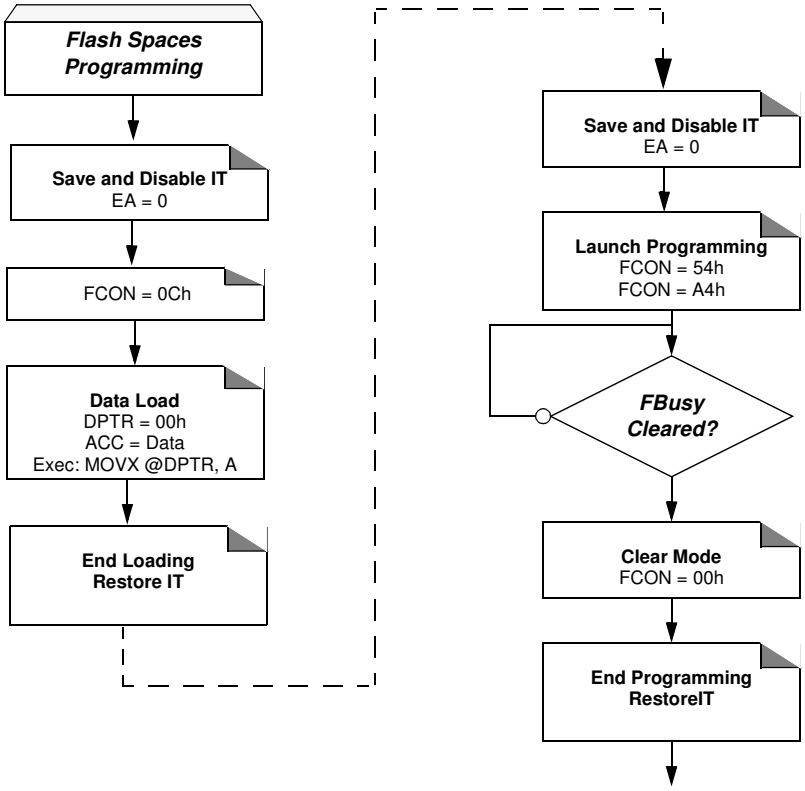

Reading the Flash Spaces

User

The following procedure is used to read the User space:

- Read one byte in Accumulator by executing MOVC A,@A+DPTR where A+DPTR is the address of the code byte to read.

Note: FCON is supposed to be reset when not needed.

Extra Row

The following procedure is used to read the Extra Row space and is summarized in Figure 24:

- Map the Extra Row space by writing 02h in FCON register.
- Read one byte in Accumulator by executing MOVC A,@A+DPTR with A = 0 and DPTR = FF80h to FFFFh.
- Clear FCON to unmap the Extra Row.

Hardware Security Byte

The following procedure is used to read the Hardware Security space and is summarized in Figure 24:

- Map the Hardware Security space by writing 04h in FCON register.
- Read the byte in Accumulator by executing MOVC A,@A+DPTR with A = 0 and DPTR = 0000h.
- Clear FCON to unmap the Hardware Security Byte.

Figure 24. Reading Procedure

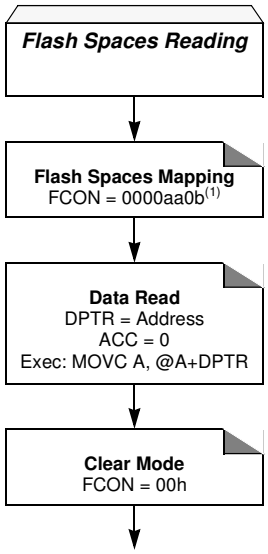

Note: 1. aa = 10 for the Hardware Security Byte.

Flash Protection from Parallel Programming

The three lock bits in Hardware Security Byte (see "In-System-Programming" section) are programmed according to Table 27 provide different level of protection for the on-chip code and data located in FM0 and FM1.

The only way to write these bits are the parallel mode. They are set by default to level 4

Table 27. Program Lock bit

Program Lock Bits				
Security Level	LB0	LB1	LB2	**Protection Description**
1	U	U	U	No program lock features enabled. MOVC instruction executed from external program memory returns non coded data.
2	P	U	U	MOVC instructions executed from external program memory are barred to return code bytes from internal memory, $\overline{EA}$ is sampled and latched on reset, and further parallel programming of the Flash is disabled.
3	U	P	U	Same as 2, also verify through parallel programming interface is disabled.
4	U	U	P	Same as 3, also external execution is disabled if code roll over beyond 7FFFh

Program Lock bits

U: unprogrammed

P: programmed

WARNING: Security level 2 and 3 should only be programmed after Flash and Core verification.

Preventing Flash Corruption

See the “Power Management” section.

Registers

FCON RegisterFCON (S:D1h)

Flash Control Register

7	6	5	4	3	2	1	0
FPL3	**FPL2**	**FPL1**	**FPL0**	**FPS**	**FMOD1**	**FMOD0**	**FBUSY**

Bit Number	Bit Mnemonic	Description
7-4	FPL3:0	**Programming Launch Command Bits** Write 5Xh followed by AXh to launch the programming according to FMOD1:0 (see Table 26)
3	FPS	**Flash Map Program Space** Set to map the column latch space in the data memory space. Clear to re-map the data memory space.
2-1	FMOD1:0	**Flash Mode** See Table 25 or Table 26.
0	FBUSY	**Flash Busy** Set by hardware when programming is in progress. Clear by hardware when programming is done. Can not be changed by software.

Reset Value = 0000 0000b

Operation Cross Memory Access

Space addressable in read and write are:

- RAM
- ERAM (Expanded RAM access by movx)
- XRAM (eXternal RAM)
- EEPROM DATA
- FM0 (user flash)
- Hardware byte
- XROW
- Boot Flash
- Flash Column latch

The table below provide the different kind of memory which can be accessed from different code location.

Table 28. Cross Memory Access

	Action	RAM	XRAM ERAM	Boot FLASH	FM0	E^2 Data	Hardware Byte	XROW
boot FLASH	Read			OK	OK	OK	OK	-
	Write			-	OK(1)	OK(1)	OK(1)	OK(1)
FM0	Read			-	OK	OK	OK	-
	Write			-	OK (idle)	OK(1)	-	OK
External memory EA = 0 or Code Roll Over	Read			-	-	OK	-	-
	Write			-	-	OK(1)	-	-

Note: 1. RWW: Read While Write

Sharing Instructions

Table 29. Instructions shared

Action	RAM	XRAM ERAM	EEPROM DATA	Boot FLASH	FM0	Hardware Byte	XROW
Read	MOV	MOVX	MOVX	MOVC	MOVC	MOVC	MOVC
Write	MOV	MOVX	MOVX	-	by cl	by cl	by cl

Note: by cl: using Column Latch

Table 30. Read MOVX A, @DPTR

EEE bit in EECON Register	FPS in FCON Register	ENBOOT	EA	XRAM ERAM	EEPROM DATA	Flash Column Latch
0	0	X	X	OK		
0	1	X	X	OK		
1	0	X	X		OK	
1	1	X	X	OK		

Table 31. Write MOVX @DPTR,A

EEE bit in EECON Register	FPS bit in FCON Register	ENBOOT	EA	XRAM ERAM	EEPROM Data	Flash Column Latch
0	0	X	X	OK		
0	1	X	1			OK
			0	OK		
1	0	X	X		OK	
1	1	X	1			OK
			0	OK		

Table 32. Read MOVC A, @DPTR

Code Execution	FCON Register			ENBOOT	DPTR	FM1	FM0	XROW	Hardware Byte	External Code
	FMOD1	FMOD0	FPS							
From FM0	0	0	X	0	0000h to 7FFFh		OK			
				1	0000h to 7FFFh		OK			
					F800h to FFFFh	Do not use this configuration				
	0	1	X	X	0000 to 007Fh See (1)			OK		
	1	0	X	X	X				OK	
	1	1	X	0	000h to 7FFFh		OK			
				1	0000h to 7FFFh		OK			
					F800h to FFFFh	Do not use this configuration				
From FM1 (ENBOOT =1	0	0	0	1	0000h to 7FFF		OK			
					F800h to FFFFh	OK				
				0	X	NA				
			1	1	X		OK			
				0	X	NA				
	0	1	X	1	0000h to 007h See (2)			OK		
				0		NA				
	1	0	X	1	X				OK	
				0		NA				
	1	1	X	1	000h to 7FFFh		OK			
				0		NA				
External code: EA=0 or Code Roll Over	X	0	X	X	X					OK

1. For DPTR higher than 007Fh only lowest 7 bits are decoded, thus the behavior is the same as for addresses from 0000h to 007Fh
2. For DPTR higher than 007Fh only lowest 7 bits are decoded, thus the behavior is the same as for addresses from 0000h to 007Fh

In-System Programming (ISP)

With the implementation of the User Space (FM0) and the Boot Space (FM1) in Flash technology the T89C51CC01 allows the system engineer the development of applications with a very high level of flexibility. This flexibility is based on the possibility to alter the customer program at any stages of a product's life:

- Before mounting the chip on the PCB, FM0 Flash can be programmed with the application code. FM1 is always pre programmed by Atmel with a bootloader (chip can be ordered with CAN bootloader or UART bootloader).(1)
- Once the chip is mounted on the PCB, it can be programmed by serial mode via the CAN bus or UART.

Note: 1. The user can also program his own bootloader in FM1.

This In-System-Programming (ISP) allows code modification over the total lifetime of the product.

Besides the default Boot loader Atmel provide to the customer also all the needed Application-Programming-Interfaces (API) which are needed for the ISP. The API are located also in the Boot memory.

This allow the customer to have a full use of the 32-Kbyte user memory.

Flash Programming and Erasure

There are three methods of programming the Flash memory:

- The Atmel bootloader located in FM1 is activated by the application. Low level API routines (located in FM1)will be used to program FM0. The interface used for serial downloading to FM0 is the UART or the CAN. API can be called also by the user's bootloader located in FM0 at [SBV]00h.
- A further method exists in activating the Atmel boot loader by hardware activation. See Section "Hardware Security Byte".
- The FM0 can be programmed also by the parallel mode using a programmer.

Figure 25. Flash Memory Mapping

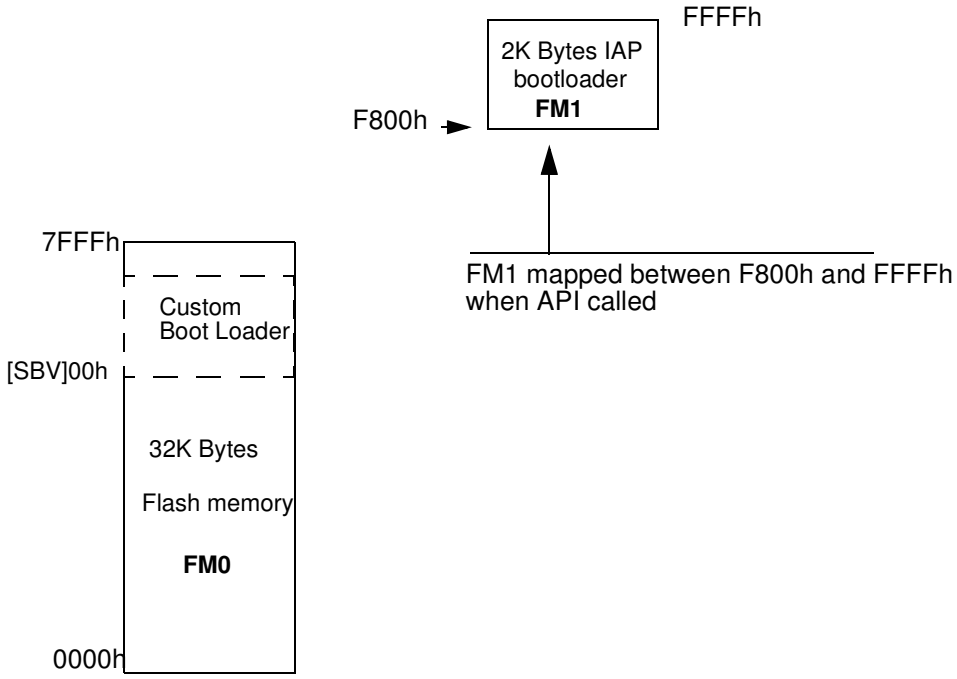

Boot Process

Software Boot Process Example

Many algorithms can be used for the software boot process. Below are descriptions of the different flags and Bytes.

Boot Loader Jump Bit (BLJB):
- This bit indicates if on RESET the user wants to jump to this application at address @0000h on FM0 or execute the boot loader at address @F800h on FM1.
- BLJB = 0 (i.e. bootloader FM1 executed after a reset) is the default Atmel factory programming.
- To read or modify this bit, the APIs are used.

Boot Vector Address (SBV):
- This byte contains the MSB of the user boot loader address in FM0.
- The default value of SBV is FCh (no user boot loader in FM0).
- To read or modify this byte, the APIs are used.

Extra Byte (EB) and Boot Status Byte (BSB):
- These Bytes are reserved for customer use.
- To read or modify these Bytes, the APIs are used.

Hardware Boot Process

At the falling edge of RESET, the bit ENBOOT in AUXR1 register is initialized with the value of Boot Loader Jump Bit (BLJB).

Further at the falling edge of RESET if the following conditions (called Hardware condition) are detected. The FCON register is initialized with the value 00h and the PC is initialized with F800h (FM1 lower byte = Bootloader entry point).

Hardware Conditions:

- PSEN low(1)
- EA high,
- ALE high (or not connected).

The Hardware condition forces the bootloader to be executed, whatever BLJB value is. Then BLBJ will be checked.

If no hardware condition is detected, the FCON register is initialized with the value F0h. Then BLJB value will be checked.

Conditions are:

- If bit BLJB = 1:
  User application in FM0 will be started at @0000h (standard reset).
- If bit BLJB = 0:
  Boot loader will be started at @F800h in FM1.

Note:
1. As PSEN is an output port in normal operating mode (running user applications or bootloader applications) after reset it is recommended to release PSEN after the falling edge of Reset is signaled.
   The hardware conditions are sampled at reset signal Falling Edge, thus they can be released at any time when reset input is low.
2. To ensure correct microcontroller startup, the PSEN pin should not be tied to ground during power-on.

Figure 26. Hardware Boot Process Algorithm

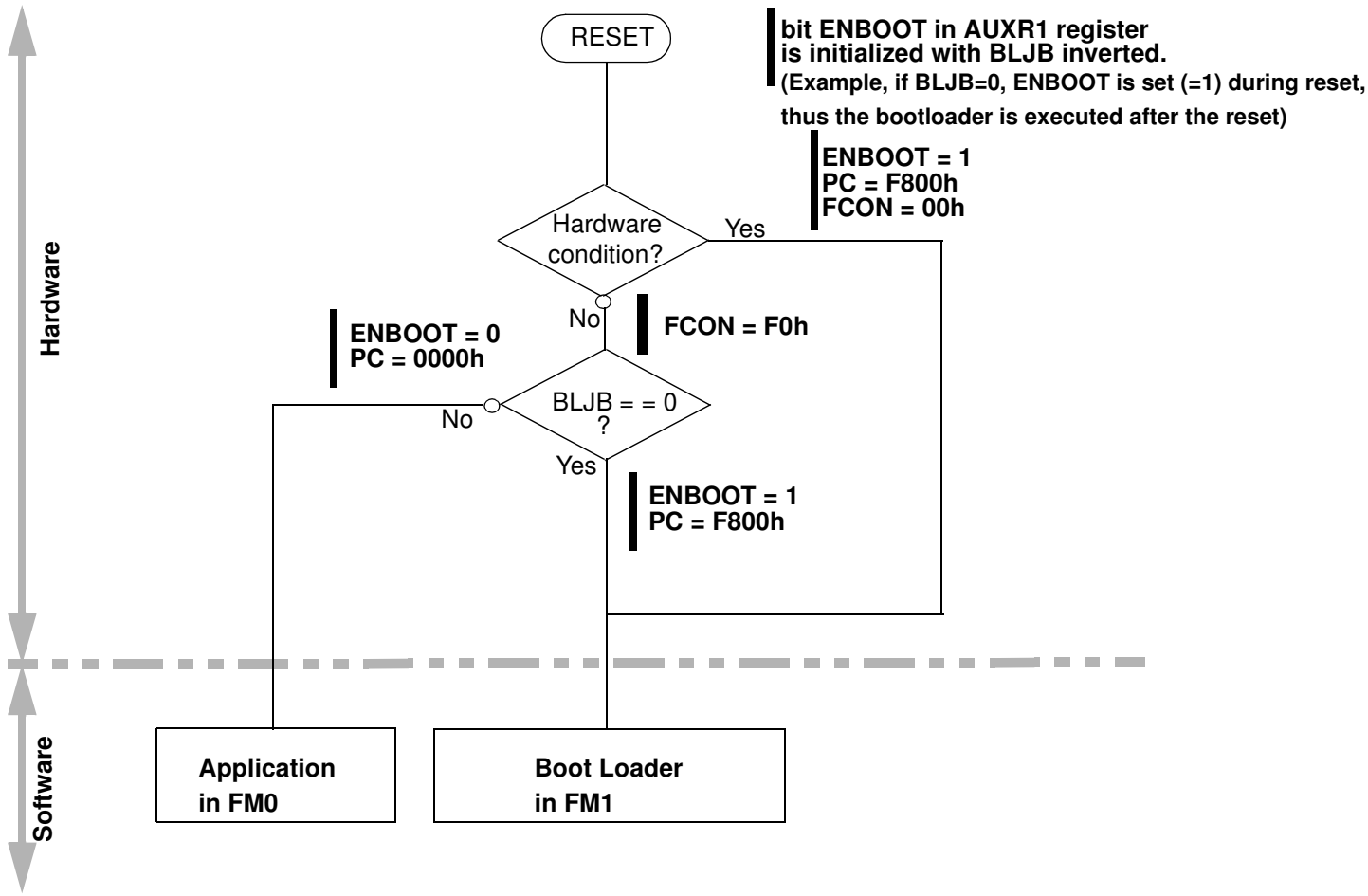

Application Programming Interface

Several Application Program Interface (API) calls are available for use by an application program to permit selective erasing and programming of Flash pages. All calls are made by functions.

All of these APIs are described in detail in the following documents on the Atmel web site.

- Datasheet Bootloader CAN T89C51CC01
- Datasheet Bootloader UART T89C51CC01

XROW Bytes

Table 33. XROW Mapping

Description	Default Value	Address
Copy of the Manufacturer Code	58h	30h
Copy of the Device ID#1: Family code	D7h	31h
Copy of the Device ID#2: Memories size and type	F7h	60h
Copy of the Device ID#3: Name and Revision	FFh	61h

Hardware Security Byte

Table 34. Hardware Security Byte

7	6	5	4	3	2	1	0
X2B	**BLJB**	**-**	**-**	**-**	**LB2**	**LB1**	**LB0**

Bit Number	Bit Mnemonic	Description
7	X2B	**X2 Bit** Set this bit to start in standard mode. Clear this bit to start in X2 mode.
6	BLJB	**Boot Loader JumpBit** - 1: To start the user's application on next RESET (@0000h) located in FM0, - 0: To start the boot loader(@F800h) located in FM1.
5-3	-	**Reserved** The value read from these bits are indeterminate.
2-0	LB2:0	**Lock Bits**

After erasing the chip in parallel mode, the default value is : FFh

The erasing in ISP mode (from bootloader) does not modify this byte.

Notes: 1. Only the 4 MSB bits can be accessed by software.
2. The 4 LSB bits can only be accessed by parallel mode.

Serial I/O Port

The T89C51CC01 I/O serial port is compatible with the I/O serial port in the 80C52. It provides both synchronous and asynchronous communication modes. It operates as a Universal Asynchronous Receiver and Transmitter (UART) in three full-duplex modes (Modes 1, 2 and 3). Asynchronous transmission and reception can occur simultaneously and at different baud rates

Serial I/O port includes the following enhancements:

- Framing error detection
- Automatic address recognition

Figure 27. Serial I/O Port Block Diagram

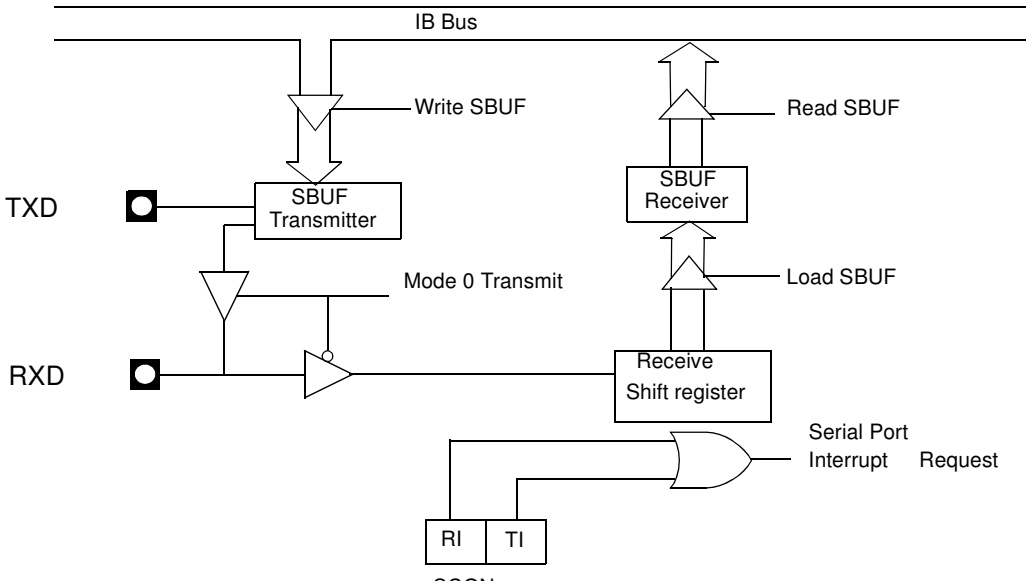

Framing Error Detection

Framing bit error detection is provided for the three asynchronous modes. To enable the framing bit error detection feature, set SMOD0 bit in PCON register.

Figure 28. Framing Error Block Diagram

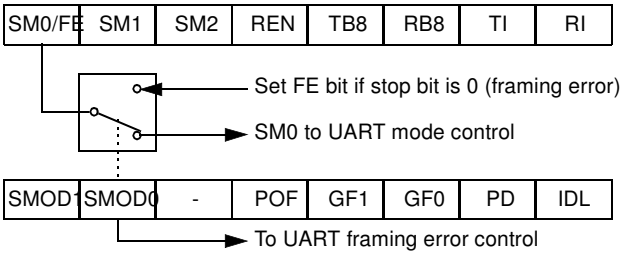

When this feature is enabled, the receiver checks each incoming data frame for a valid stop bit. An invalid stop bit may result from noise on the serial lines or from simultaneous transmission by two CPUs. If a valid stop bit is not found, the Framing Error bit (FE) in SCON register bit is set.

The software may examine the FE bit after each reception to check for data errors. Once set, only software or a reset clears the FE bit. Subsequently received frames with valid stop bits cannot clear the FE bit. When the FE feature is enabled, RI rises on the stop bit instead of the last data bit (See Figure 29. and Figure 30.).

Figure 29. UART Timing in Mode 1

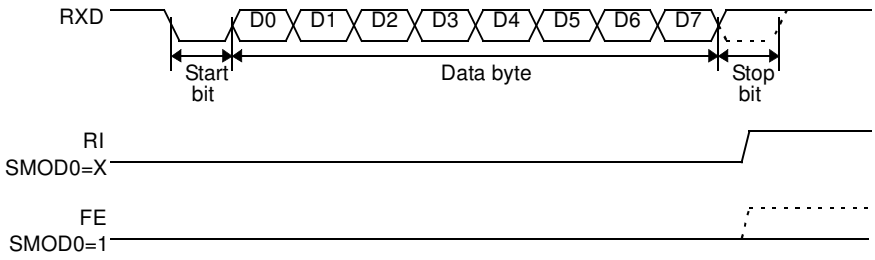

Figure 30. UART Timing in Modes 2 and 3

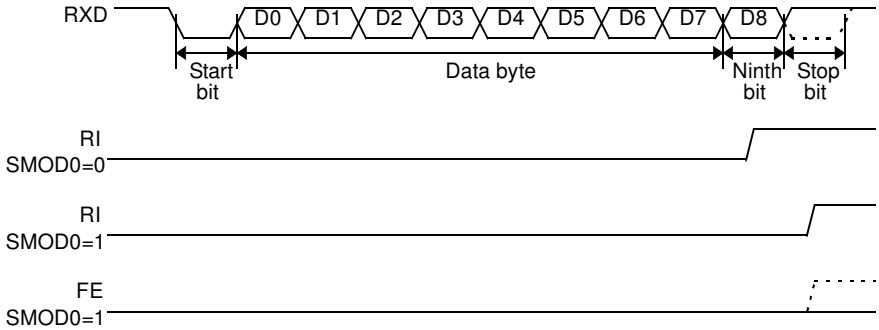

Automatic Address Recognition

The automatic address recognition feature is enabled when the multiprocessor communication feature is enabled (SM2 bit in SCON register is set).

Implemented in the hardware, automatic address recognition enhances the multiprocessor communication feature by allowing the serial port to examine the address of each incoming command frame. Only when the serial port recognizes its own address will the receiver set the RI bit in the SCON register to generate an interrupt. This ensures that the CPU is not interrupted by command frames addressed to other devices.

If necessary, you can enable the automatic address recognition feature in mode 1. In this configuration, the stop bit takes the place of the ninth data bit. Bit RI is set only when the received command frame address matches the device's address and is terminated by a valid stop bit.

To support automatic address recognition, a device is identified by a given address and a broadcast address.

Note: The multiprocessor communication and automatic address recognition features cannot be enabled in mode 0 (i.e. setting SM2 bit in SCON register in mode 0 has no effect).

Given Address

Each device has an individual address that is specified in the SADDR register; the SADEN register is a mask byte that contains don't-care bits (defined by zeros) to form the device's given address. The don't-care bits provide the flexibility to address one or more slaves at a time. The following example illustrates how a given address is formed. To address a device by its individual address, the SADEN mask byte must be `1111 1111b`.

For example:

```
SADDR0101 0110b
SADEN1111 1100b
Given0101 01XXb
```

Here is an example of how to use given addresses to address different slaves:

```
Slave A:SADDR1111 0001b
    SADEN1111 1010b
    Given1111 0X0Xb

Slave B:SADDR1111 0011b
    SADEN1111 1001b
    Given1111 0XX1b

Slave C:SADDR1111 0011b
    SADEN1111 1101b
    Given1111 00X1b
```

The SADEN byte is selected so that each slave may be addressed separately.

For slave A, bit 0 (the LSB) is a don't-care bit; for slaves B and C, bit 0 is a 1. To communicate with slave A only, the master must send an address where bit 0 is clear (e.g. `1111 0000b`).

For slave A, bit 1 is a 0; for slaves B and C, bit 1 is a don't care bit. To communicate with slaves A and B, but not slave C, the master must send an address with bits 0 and 1 both set (e.g. `1111 0011b`).

To communicate with slaves A, B and C, the master must send an address with bit 0 set, bit 1 clear, and bit 2 clear (e.g. `1111 0001b`).

Broadcast Address

A broadcast address is formed from the logical OR of the SADDR and SADEN registers with zeros defined as don't-care bits, e.g.:

```
SADDR 0101 0110b
SADEN 1111 1100b
SADDR OR SADEN1111 111Xb
```

The use of don't-care bits provides flexibility in defining the broadcast address, however in most applications, a broadcast address is FFh. The following is an example of using broadcast addresses:

```
Slave A:SADDR1111 0001b
    SADEN1111 1010b
    Given1111 1X11b,

Slave B:SADDR1111 0011b
    SADEN1111 1001b
    Given1111 1X11B,

Slave C:SADDR=1111 0010b
    SADEN1111 1101b
    Given1111 1111b
```

For slaves A and B, bit 2 is a don't care bit; for slave C, bit 2 is set. To communicate with all of the slaves, the master must send an address FFh. To communicate with slaves A and B, but not slave C, the master can send and address FBh.

Registers

Table 35. SCON Register

SCON (S:98h)
Serial Control Register

7	6	5	4	3	2	1	0
FE/SM0	**SM1**	**SM2**	**REN**	**TB8**	**RB8**	**TI**	**RI**

Bit Number	Bit Mnemonic	Description
7	FE	**Framing Error bit (SMOD0=1)** Clear to reset the error state, not cleared by a valid stop bit. Set by hardware when an invalid stop bit is detected.
	SM0	**Serial port Mode bit 0 (SMOD0=0)** Refer to SM1 for serial port mode selection.
6	SM1	**Serial port Mode bit 1** SM0 SM1 Mode Baud Rate 0 0 Shift Register $F_{XTAL}/12$ (or F_{XTAL} /6 in mode X2) 0 1 8-bit UART Variable 1 0 9-bit UART $F_{XTAL}/64$ or $F_{XTAL}/32$ 1 1 9-bit UART Variable
5	SM2	**Serial port Mode 2 bit/Multiprocessor Communication Enable bit** Clear to disable multiprocessor communication feature. Set to enable multiprocessor communication feature in mode 2 and 3.
4	REN	**Reception Enable bit** Clear to disable serial reception. Set to enable serial reception.
3	TB8	**Transmitter Bit 8/Ninth bit to transmit in modes 2 and 3** Clear to transmit a logic 0 in the 9th bit. Set to transmit a logic 1 in the 9th bit.
2	RB8	**Receiver Bit 8/Ninth bit received in modes 2 and 3** Cleared by hardware if 9th bit received is a logic 0. Set by hardware if 9th bit received is a logic 1.
1	TI	**Transmit Interrupt flag** Clear to acknowledge interrupt. Set by hardware at the end of the 8th bit time in mode 0 or at the beginning of the stop bit in the other modes.
0	RI	**Receive Interrupt flag** Clear to acknowledge interrupt. Set by hardware at the end of the 8th bit time in mode 0, see Figure 29. and Figure 30. in the other modes.

Reset Value = 0000 0000b
Bit addressable

Table 36. SADEN Register

SADEN (S:B9h)
Slave Address Mask Register

7	6	5	4	3	2	1	0
–	–	–	–	–	–	–	–

Bit Number	Bit Mnemonic	Description
7-0		**Mask Data for Slave Individual Address**

Reset Value = 0000 0000b
Not bit addressable

Table 37. SADDR Register

SADDR (S:A9h)
Slave Address Register

7	6	5	4	3	2	1	0
–	–	–	–	–	–	–	–

Bit Number	Bit Mnemonic	Description
7-0		**Slave Individual Address**

Reset Value = 0000 0000b
Not bit addressable

Table 38. SBUF Register

SBUF (S:99h)
Serial Data Buffer

7	6	5	4	3	2	1	0
–	–	–	–	–	–	–	–

Bit Number	Bit Mnemonic	Description
7-0		**Data sent/received by Serial I/O Port**

Reset Value = 0000 0000b
Not bit addressable

Table 39. PCON Register

PCON (S:87h)
Power Control Register

7	6	5	4	3	2	1	0
SMOD1	**SMOD0**	**–**	**POF**	**GF1**	**GF0**	**PD**	**IDL**

Bit Number	Bit Mnemonic	Description
7	SMOD1	**Serial port Mode bit 1** Set to select double baud rate in mode 1, 2 or 3.
6	SMOD0	**Serial port Mode bit 0** Clear to select SM0 bit in SCON register. Set to select FE bit in SCON register.
5	-	**Reserved** The value read from this bit is indeterminate. Do not set this bit.
4	POF	**Power-Off Flag** Clear to recognize next reset type. Set by hardware when VCC rises from 0 to its nominal voltage. Can also be set by software.
3	GF1	**General-purpose Flag** Cleared by user for general-purpose usage. Set by user for general-purpose usage.
2	GF0	**General-purpose Flag** Cleared by user for general-purpose usage. Set by user for general-purpose usage.
1	PD	**Power-Down mode bit** Cleared by hardware when reset occurs. Set to enter power-down mode.
0	IDL	**Idle mode bit** Clear by hardware when interrupt or reset occurs. Set to enter idle mode.

Reset Value = 00X1 0000b
Not bit addressable

Timers/Counters

The T89C51CC01 implements two general-purpose, 16-bit Timers/Counters. Such are identified as Timer 0 and Timer 1, and can be independently configured to operate in a variety of modes as a Timer or an event Counter. When operating as a Timer, the Timer/Counter runs for a programmed length of time, then issues an interrupt request. When operating as a Counter, the Timer/Counter counts negative transitions on an external pin. After a preset number of counts, the Counter issues an interrupt request. The various operating modes of each Timer/Counter are described in the following sections.

Timer/Counter Operations

A basic operation is Timer registers THx and TLx (x = 0, 1) connected in cascade to form a 16-bit Timer. Setting the run control bit (TRx) in TCON register (see Figure 40) turns the Timer on by allowing the selected input to increment TLx. When TLx overflows it increments THx; when THx overflows it sets the Timer overflow flag (TFx) in TCON register. Setting the TRx does not clear the THx and TLx Timer registers. Timer registers can be accessed to obtain the current count or to enter preset values. They can be read at any time but TRx bit must be cleared to preset their values, otherwise the behavior of the Timer/Counter is unpredictable.

The C/Tx# control bit selects Timer operation or Counter operation by selecting the divided-down peripheral clock or external pin Tx as the source for the counted signal. TRx bit must be cleared when changing the mode of operation, otherwise the behavior of the Timer/Counter is unpredictable.

For Timer operation (C/Tx# = 0), the Timer register counts the divided-down peripheral clock. The Timer register is incremented once every peripheral cycle (6 peripheral clock periods). The Timer clock rate is $F_{PER}/6$, i.e. $F_{OSC}/12$ in standard mode or $F_{OSC}/6$ in X2 mode.

For Counter operation (C/Tx# = 1), the Timer register counts the negative transitions on the Tx external input pin. The external input is sampled every peripheral cycles. When the sample is high in one cycle and low in the next one, the Counter is incremented. Since it takes 2 cycles (12 peripheral clock periods) to recognize a negative transition, the maximum count rate is $F_{PER}/12$, i.e. $F_{OSC}/24$ in standard mode or $F_{OSC}/12$ in X2 mode. There are no restrictions on the duty cycle of the external input signal, but to ensure that a given level is sampled at least once before it changes, it should be held for at least one full peripheral cycle.

Timer 0

Timer 0 functions as either a Timer or event Counter in four modes of operation. Figure 31 to Figure 34 show the logical configuration of each mode.

Timer 0 is controlled by the four lower bits of TMOD register (see Figure 41) and bits 0, 1, 4 and 5 of TCON register (see Figure 40). TMOD register selects the method of Timer gating (GATE0), Timer or Counter operation (T/C0#) and mode of operation (M10 and M00). TCON register provides Timer 0 control functions: overflow flag (TF0), run control bit (TR0), interrupt flag (IE0) and interrupt type control bit (IT0).

For normal Timer operation (GATE0 = 0), setting TR0 allows TL0 to be incremented by the selected input. Setting GATE0 and TR0 allows external pin INT0# to control Timer operation.

Timer 0 overflow (count rolls over from all 1s to all 0s) sets TF0 flag generating an interrupt request.

It is important to stop Timer/Counter before changing mode.

Mode 0 (13-bit Timer)

Mode 0 configures Timer 0 as an 13-bit Timer which is set up as an 8-bit Timer (TH0 register) with a modulo 32 prescaler implemented with the lower five bits of TL0 register (see Figure 31). The upper three bits of TL0 register are indeterminate and should be ignored. Prescaler overflow increments TH0 register.

Figure 31. Timer/Counter x (x = 0 or 1) in Mode 0

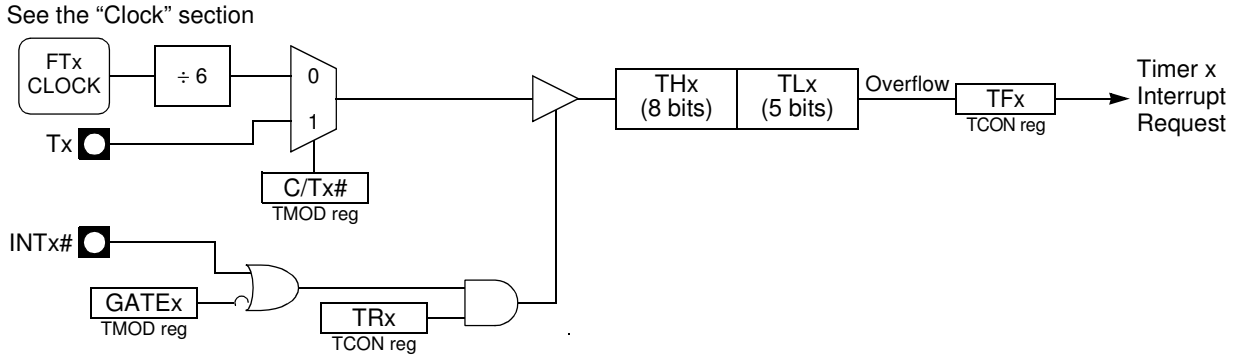

Mode 1 (16-bit Timer)

Mode 1 configures Timer 0 as a 16-bit Timer with TH0 and TL0 registers connected in cascade (see Figure 32). The selected input increments TL0 register.

Figure 32. Timer/Counter x (x = 0 or 1) in Mode 1

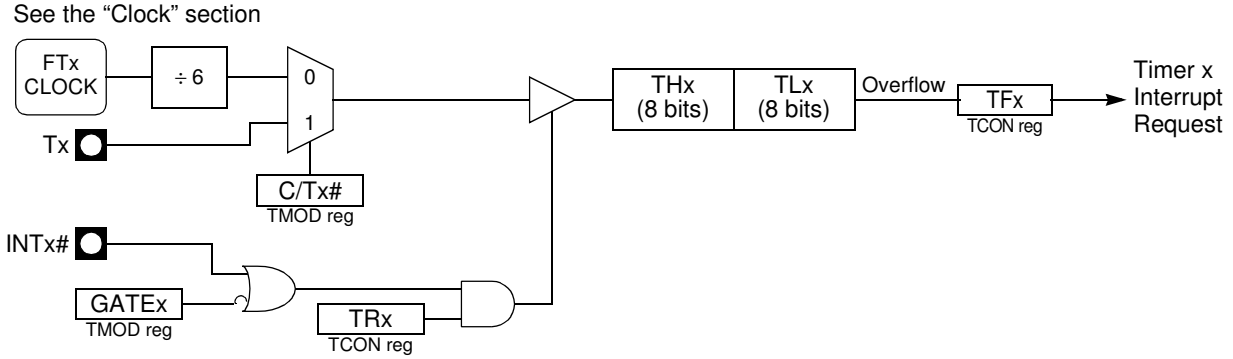

Mode 2 (8-bit Timer with Auto-Reload)

Mode 2 configures Timer 0 as an 8-bit Timer (TL0 register) that automatically reloads from TH0 register (see Figure 33). TL0 overflow sets TF0 flag in TCON register and reloads TL0 with the contents of TH0, which is preset by software. When the interrupt request is serviced, hardware clears TF0. The reload leaves TH0 unchanged. The next reload value may be changed at any time by writing it to TH0 register.

Figure 33. Timer/Counter x (x = 0 or 1) in Mode 2

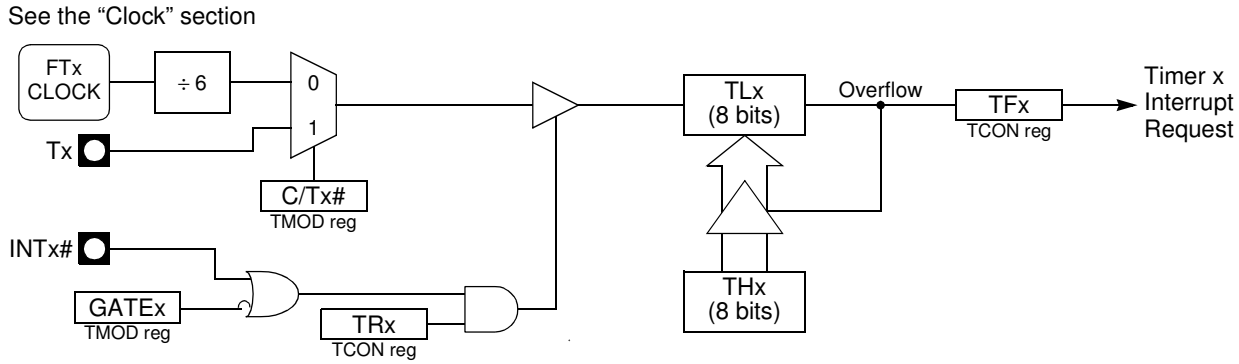

Mode 3 (Two 8-bit Timers)

Mode 3 configures Timer 0 such that registers TL0 and TH0 operate as separate 8-bit Timers (see Figure 34). This mode is provided for applications requiring an additional 8-bit Timer or Counter. TL0 uses the Timer 0 control bits C/T0# and GATE0 in TMOD register, and TR0 and TF0 in TCON register in the normal manner. TH0 is locked into a Timer function (counting F_{PER} /6) and takes over use of the Timer 1 interrupt (TF1) and run control (TR1) bits. Thus, operation of Timer 1 is restricted when Timer 0 is in mode 3.

Figure 34. Timer/Counter 0 in Mode 3: Two 8-bit Counters

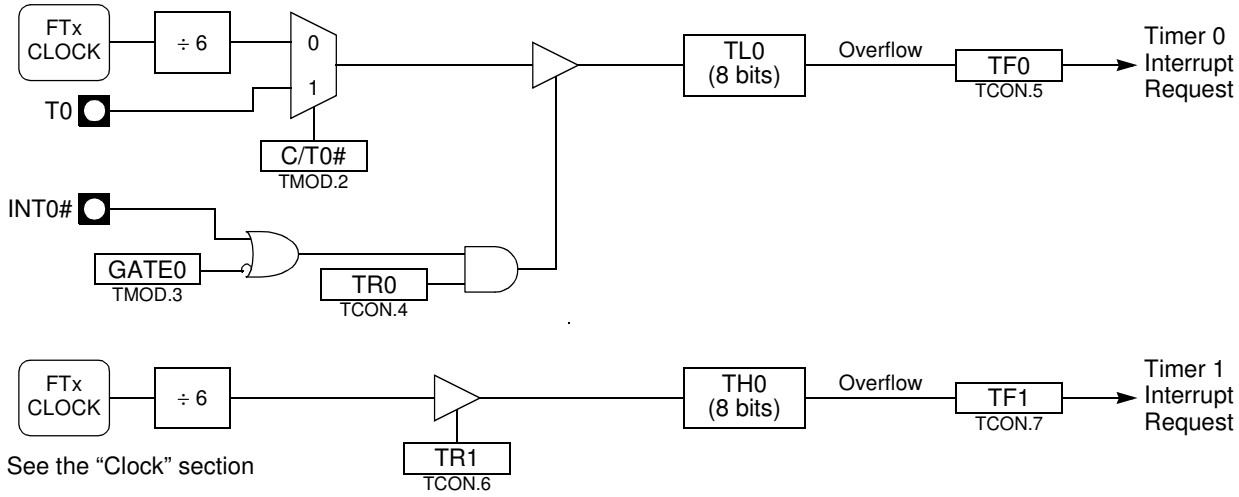

Timer 1

Timer 1 is identical to Timer 0 excepted for Mode 3 which is a hold-count mode. The following comments help to understand the differences:

- Timer 1 functions as either a Timer or event Counter in three modes of operation. Figure 31 to Figure 33 show the logical configuration for modes 0, 1, and 2. Timer 1's mode 3 is a hold-count mode.
- Timer 1 is controlled by the four high-order bits of TMOD register (see Figure 41) and bits 2, 3, 6 and 7 of TCON register (see Figure 40). TMOD register selects the method of Timer gating (GATE1), Timer or Counter operation (C/T1#) and mode of operation (M11 and M01). TCON register provides Timer 1 control functions: overflow flag (TF1), run control bit (TR1), interrupt flag (IE1) and interrupt type control bit (IT1).
- Timer 1 can serve as the Baud Rate Generator for the Serial Port. Mode 2 is best suited for this purpose.
- For normal Timer operation (GATE1 = 0), setting TR1 allows TL1 to be incremented by the selected input. Setting GATE1 and TR1 allows external pin INT1# to control Timer operation.
- Timer 1 overflow (count rolls over from all 1s to all 0s) sets the TF1 flag generating an interrupt request.
- When Timer 0 is in mode 3, it uses Timer 1's overflow flag (TF1) and run control bit (TR1). For this situation, use Timer 1 only for applications that do not require an interrupt (such as a Baud Rate Generator for the Serial Port) and switch Timer 1 in and out of mode 3 to turn it off and on.
- It is important to stop Timer/Counter before changing mode.

Mode 0 (13-bit Timer)

Mode 0 configures Timer 1 as a 13-bit Timer, which is set up as an 8-bit Timer (TH1 register) with a modulo-32 prescaler implemented with the lower 5 bits of the TL1 register (see Figure 31). The upper 3 bits of TL1 register are ignored. Prescaler overflow increments TH1 register.

Mode 1 (16-bit Timer)

Mode 1 configures Timer 1 as a 16-bit Timer with TH1 and TL1 registers connected in cascade (see Figure 32). The selected input increments TL1 register.

Mode 2 (8-bit Timer with Auto-Reload)

Mode 2 configures Timer 1 as an 8-bit Timer (TL1 register) with automatic reload from TH1 register on overflow (see Figure 33). TL1 overflow sets TF1 flag in TCON register and reloads TL1 with the contents of TH1, which is preset by software. The reload leaves TH1 unchanged.

Mode 3 (Halt)

Placing Timer 1 in mode 3 causes it to halt and hold its count. This can be used to halt Timer 1 when TR1 run control bit is not available i.e. when Timer 0 is in mode 3.

Interrupt

Each Timer handles one interrupt source that is the timer overflow flag TF0 or TF1. This flag is set every time an overflow occurs. Flags are cleared when vectoring to the Timer interrupt routine. Interrupts are enabled by setting ETx bit in IEN0 register. This assumes interrupts are globally enabled by setting EA bit in IEN0 register.

Figure 35. Timer Interrupt System

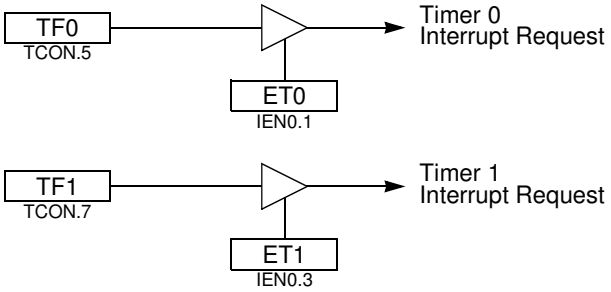

Registers

Table 40. TCON Register

TCON (S:88h)
Timer/Counter Control Register

7	6	5	4	3	2	1	0
TF1	**TR1**	**TF0**	**TR0**	**IE1**	**IT1**	**IE0**	**IT0**

Bit Number	Bit Mnemonic	Description
7	TF1	**Timer 1 Overflow Flag** Cleared by hardware when processor vectors to interrupt routine. Set by hardware on Timer/Counter overflow, when Timer 1 register overflows.
6	TR1	**Timer 1 Run Control Bit** Clear to turn off Timer/Counter 1. Set to turn on Timer/Counter 1.
5	TF0	**Timer 0 Overflow Flag** Cleared by hardware when processor vectors to interrupt routine. Set by hardware on Timer/Counter overflow, when Timer 0 register overflows.
4	TR0	**Timer 0 Run Control Bit** Clear to turn off Timer/Counter 0. Set to turn on Timer/Counter 0.
3	IE1	**Interrupt 1 Edge Flag** Cleared by hardware when interrupt is processed if edge-triggered (see IT1). Set by hardware when external interrupt is detected on INT1# pin.
2	IT1	**Interrupt 1 Type Control Bit** Clear to select low level active (level triggered) for external interrupt 1 (INT1#). Set to select falling edge active (edge triggered) for external interrupt 1.
1	IE0	**Interrupt 0 Edge Flag** Cleared by hardware when interrupt is processed if edge-triggered (see IT0). Set by hardware when external interrupt is detected on INT0# pin.
0	IT0	**Interrupt 0 Type Control Bit** Clear to select low level active (level triggered) for external interrupt 0 (INT0#). Set to select falling edge active (edge triggered) for external interrupt 0.

Reset Value = 0000 0000b

Table 41. TMOD Register

TMOD (S:89h)
Timer/Counter Mode Control Register

7	6	5	4	3	2	1	0
GATE1	**C/T1#**	**M11**	**M01**	**GATE0**	**C/T0#**	**M10**	**M00**

Bit Number	Bit Mnemonic	Description
7	GATE1	**Timer 1 Gating Control Bit** Clear to enable Timer 1 whenever TR1 bit is set. Set to enable Timer 1 only while INT1# pin is high and TR1 bit is set.
6	C/T1#	**Timer 1 Counter/Timer Select Bit** Clear for Timer operation: Timer 1 counts the divided-down system clock. Set for Counter operation: Timer 1 counts negative transitions on external pin T1.
5	M11	**Timer 1 Mode Select Bits** M11 M01 Operating mode 0 0 Mode 0: 8-bit Timer/Counter (TH1) with 5-bit prescaler (TL1). 0 1 Mode 1: 16-bit Timer/Counter. 1 0 Mode 2: 8-bit auto-reload Timer/Counter (TL1)(1) 1 1 Mode 3: Timer 1 halted. Retains count
4	M01	
3	GATE0	**Timer 0 Gating Control Bit** Clear to enable Timer 0 whenever TR0 bit is set. Set to enable Timer/Counter 0 only while INT0# pin is high and TR0 bit is set.
2	C/T0#	**Timer 0 Counter/Timer Select Bit** Clear for Timer operation: Timer 0 counts the divided-down system clock. Set for Counter operation: Timer 0 counts negative transitions on external pin T0.
1	M10	**Timer 0 Mode Select Bit** M10 M00 Operating mode 0 0 Mode 0: 8-bit Timer/Counter (TH0) with 5-bit prescaler (TL0). 0 1 Mode 1: 16-bit Timer/Counter. 1 0 Mode 2: 8-bit auto-reload Timer/Counter (TL0)(2) 1 1 Mode 3: TL0 is an 8-bit Timer/Counter TH0 is an 8-bit Timer using Timer 1's TR0 and TF0 bits.
0	M00	

Notes: 1. Reloaded from TH1 at overflow.
2. Reloaded from TH0 at overflow.

Reset Value = 0000 0000b

Table 42. TH0 Register

TH0 (S:8Ch)
Timer 0 High Byte Register

7	6	5	4	3	2	1	0
–	–	–	–	–	–	–	–

Bit Number	Bit Mnemonic	Description
7:0		**High Byte of Timer 0.**

Reset Value = 0000 0000b

Table 43. TL0 Register

TL0 (S:8Ah)
Timer 0 Low Byte Register

7	6	5	4	3	2	1	0
–	–	–	–	–	–	–	–

Bit Number	Bit Mnemonic	Description
7:0		**Low Byte of Timer 0.**

Reset Value = 0000 0000b

Table 44. TH1 Register

TH1 (S:8Dh)
Timer 1 High Byte Register

7	6	5	4	3	2	1	0
–	–	–	–	–	–	–	–

Bit Number	Bit Mnemonic	Description
7:0		**High Byte of Timer 1.**

Reset Value = 0000 0000b

Table 45. TL1 Register

TL1 (S:8Bh)
Timer 1 Low Byte Register

7	6	5	4	3	2	1	0
–	–	–	–	–	–	–	–

Bit Number	Bit Mnemonic	Description
7:0		**Low Byte of Timer 1.**

Reset Value = 0000 0000b

Timer 2

The T89C51CC01 timer 2 is compatible with timer 2 in the 80C52.

It is a 16-bit timer/counter: the count is maintained by two eight-bit timer registers, TH2 and TL2 that are cascade- connected. It is controlled by T2CON register (See Table) and T2MOD register (See Table 48). Timer 2 operation is similar to Timer 0 and Timer 1. C/$\overline{T2}$ selects $F_{T2\ clock}/6$ (timer operation) or external pin T2 (counter operation) as timer clock. Setting TR2 allows TL2 to be incremented by the selected input.

Timer 2 includes the following enhancements:

- Auto-reload mode (up or down counter)
- Programmable clock-output

Auto-Reload Mode

The auto-reload mode configures timer 2 as a 16-bit timer or event counter with automatic reload. This feature is controlled by the DCEN bit in T2MOD register (See Table 48). Setting the DCEN bit enables timer 2 to count up or down as shown in Figure 36. In this mode the T2EX pin controls the counting direction.

When T2EX is high, timer 2 counts up. Timer overflow occurs at FFFFh which sets the TF2 flag and generates an interrupt request. The overflow also causes the 16-bit value in RCAP2H and RCAP2L registers to be loaded into the timer registers TH2 and TL2.

When T2EX is low, timer 2 counts down. Timer underflow occurs when the count in the timer registers TH2 and TL2 equals the value stored in RCAP2H and RCAP2L registers. The underflow sets TF2 flag and reloads FFFFh into the timer registers.

The EXF2 bit toggles when timer 2 overflow or underflow, depending on the direction of the count. EXF2 does not generate an interrupt. This bit can be used to provide 17-bit resolution.

Figure 36. Auto-Reload Mode Up/Down Counter

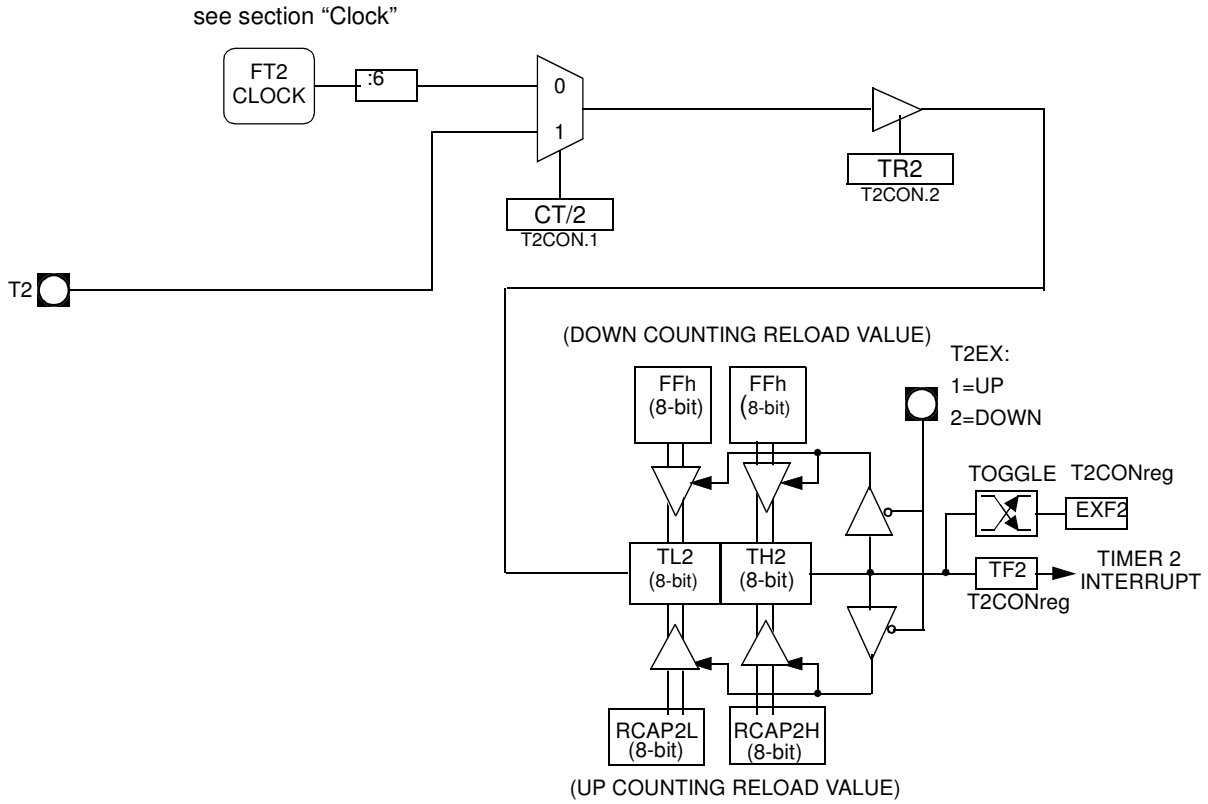

Programmable Clock-Output

In clock-out mode, timer 2 operates as a 50%-duty-cycle, programmable clock generator (See Figure 37). The input clock increments TL2 at frequency $F_{OSC}/2$. The timer repeatedly counts to overflow from a loaded value. At overflow, the contents of RCAP2H and RCAP2L registers are loaded into TH2 and TL2. In this mode, timer 2 overflows do not generate interrupts. The formula gives the clock-out frequency depending on the system oscillator frequency and the value in the RCAP2H and RCAP2L registers:

$$Clock-OutFrequency = \frac{FT2clock}{4 \times (65536 - RCAP2H/RCAP2L)}$$

For a 16 MHz system clock in x1 mode, timer 2 has a programmable frequency range of 61 Hz ($F_{OSC}/2^{16}$) to 4 MHz ($F_{OSC}/4$). The generated clock signal is brought out to T2 pin (P1.0).

Timer 2 is programmed for the clock-out mode as follows:

- Set T2OE bit in T2MOD register.
- Clear C/$\overline{T2}$ bit in T2CON register.
- Determine the 16-bit reload value from the formula and enter it in RCAP2H/RCAP2L registers.
- Enter a 16-bit initial value in timer registers TH2/TL2. It can be the same as the reload value or different depending on the application.
- To start the timer, set TR2 run control bit in T2CON register.

It is possible to use timer 2 as a baud rate generator and a clock generator simultaneously. For this configuration, the baud rates and clock frequencies are not independent since both functions use the values in the RCAP2H and RCAP2L registers.

Figure 37. Clock-Out Mode

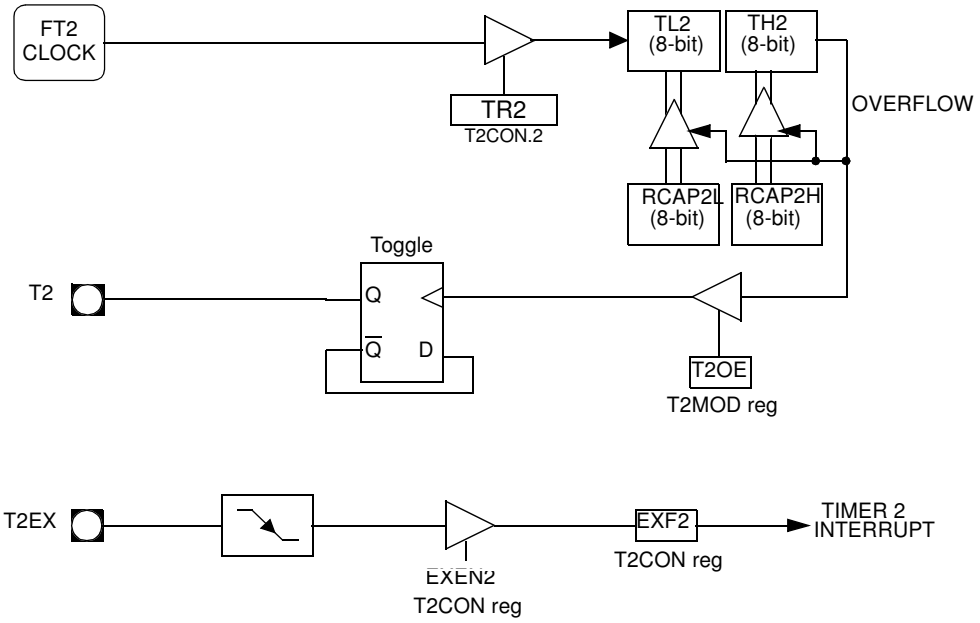

Registers

Table 46. T2CON Register

T2CON (S:C8h)
Timer 2 Control Register

7	6	5	4	3	2	1	0
TF2	EXF2	RCLK	TCLK	EXEN2	TR2	C/T2#	CP/RL2#

Bit Number	Bit Mnemonic	Description
7	TF2	**Timer 2 Overflow Flag** TF2 is not set if RCLK=1 or TCLK = 1. Must be cleared by software. Set by hardware on timer 2 overflow.
6	EXF2	**Timer 2 External Flag** Set when a capture or a reload is caused by a negative transition on T2EX pin if EXEN2=1. Set to cause the CPU to vector to timer 2 interrupt routine when timer 2 interrupt is enabled. Must be cleared by software.
5	RCLK	**Receive Clock bit** Clear to use timer 1 overflow as receive clock for serial port in mode 1 or 3. Set to use timer 2 overflow as receive clock for serial port in mode 1 or 3.
4	TCLK	**Transmit Clock bit** Clear to use timer 1 overflow as transmit clock for serial port in mode 1 or 3. Set to use timer 2 overflow as transmit clock for serial port in mode 1 or 3.
3	EXEN2	**Timer 2 External Enable bit** Clear to ignore events on T2EX pin for timer 2 operation. Set to cause a capture or reload when a negative transition on T2EX pin is detected, if timer 2 is not used to clock the serial port.
2	TR2	**Timer 2 Run Control bit** Clear to turn off timer 2. Set to turn on timer 2.
1	C/T2#	**Timer/Counter 2 Select bit** Clear for timer operation (input from internal clock system: F_{OSC}). Set for counter operation (input from T2 input pin).
0	CP/RL2#	**Timer 2 Capture/Reload bit** If RCLK=1 or TCLK=1, CP/RL2# is ignored and timer is forced to auto-reload on timer 2 overflow. Clear to auto-reload on timer 2 overflows or negative transitions on T2EX pin if EXEN2=1. Set to capture on negative transitions on T2EX pin if EXEN2=1.

Reset Value = 0000 0000b
Bit addressable

Table 47. T2MOD Register

T2MOD (S:C9h)
Timer 2 Mode Control Register

7	6	5	4	3	2	1	0
-	-	-	-	-	-	T2OE	DCEN

Bit Number	Bit Mnemonic	Description
7	-	**Reserved** The value read from this bit is indeterminate. Do not set this bit.
6	-	**Reserved** The value read from this bit is indeterminate. Do not set this bit.
5	-	**Reserved** The value read from this bit is indeterminate. Do not set this bit.
4	-	**Reserved** The value read from this bit is indeterminate. Do not set this bit.
3	-	**Reserved** The value read from this bit is indeterminate. Do not set this bit.
2	-	**Reserved** The value read from this bit is indeterminate. Do not set this bit.
1	T2OE	**Timer 2 Output Enable bit** Clear to program P1.0/T2 as clock input or I/O port. Set to program P1.0/T2 as clock output.
0	DCEN	**Down Counter Enable bit** Clear to disable timer 2 as up/down counter. Set to enable timer 2 as up/down counter.

Reset Value = XXXX XX00b
Not bit addressable

Table 48. TH2 Register

TH2 (S:CDh)
Timer 2 High Byte Register

7	6	5	4	3	2	1	0
-	-	-	-	-	-	-	-

Bit Number	Bit Mnemonic	Description
7-0		High Byte of Timer 2.

Reset Value = 0000 0000b
Not bit addressable

Table 49. TL2 Register

TL2 (S:CCh)
Timer 2 Low Byte Register

7	6	5	4	3	2	1	0
-	-	-	-	-	-	-	-

Bit Number	Bit Mnemonic	Description
7-0		Low Byte of Timer 2.

Reset Value = 0000 0000b
Not bit addressable

Table 50. RCAP2H Register

RCAP2H (S:CBh)
Timer 2 Reload/Capture High Byte Register

7	6	5	4	3	2	1	0
-	-	-	-	-	-	-	-

Bit Number	Bit Mnemonic	Description
7-0		High Byte of Timer 2 Reload/Capture.

Reset Value = 0000 0000b
Not bit addressable

Table 51. RCAP2L Register

RCAP2L (S:CAH)
TIMER 2 REload/Capture Low Byte Register

7	6	5	4	3	2	1	0
-	-	-	-	-	-	-	-

Bit Number	Bit Mnemonic	Description
7-0		Low Byte of Timer 2 Reload/Capture.

Reset Value = 0000 0000b
Not bit addressable

Watchdog Timer

T89C51CC01 contains a powerful programmable hardware Watchdog Timer (WDT) that automatically resets the chip if it software fails to reset the WDT before the selected time interval has elapsed. It permits large Time-Out ranking from 16ms to 2s @Fosc = 12MHz in X1 mode.

This WDT consists of a 14-bit counter plus a 7-bit programmable counter, a Watchdog Timer reset register (WDTRST) and a Watchdog Timer programming (WDTPRG) register. When exiting reset, the WDT is -by default- disable.

To enable the WDT, the user has to write the sequence 1EH and E1H into WDTRST register no instruction in between. When the Watchdog Timer is enabled, it will increment every machine cycle while the oscillator is running and there is no way to disable the WDT except through reset (either hardware reset or WDT overflow reset). When WDT overflows, it will generate an output RESET pulse at the RST pin. The RESET pulse duration is $96xT_{OSC}$, where $T_{OSC}=1/F_{OSC}$. To make the best use of the WDT, it should be serviced in those sections of code that will periodically be executed within the time required to prevent a WDT reset

Note: When the Watchdog is enable it is impossible to change its period.

Figure 38. Watchdog Timer

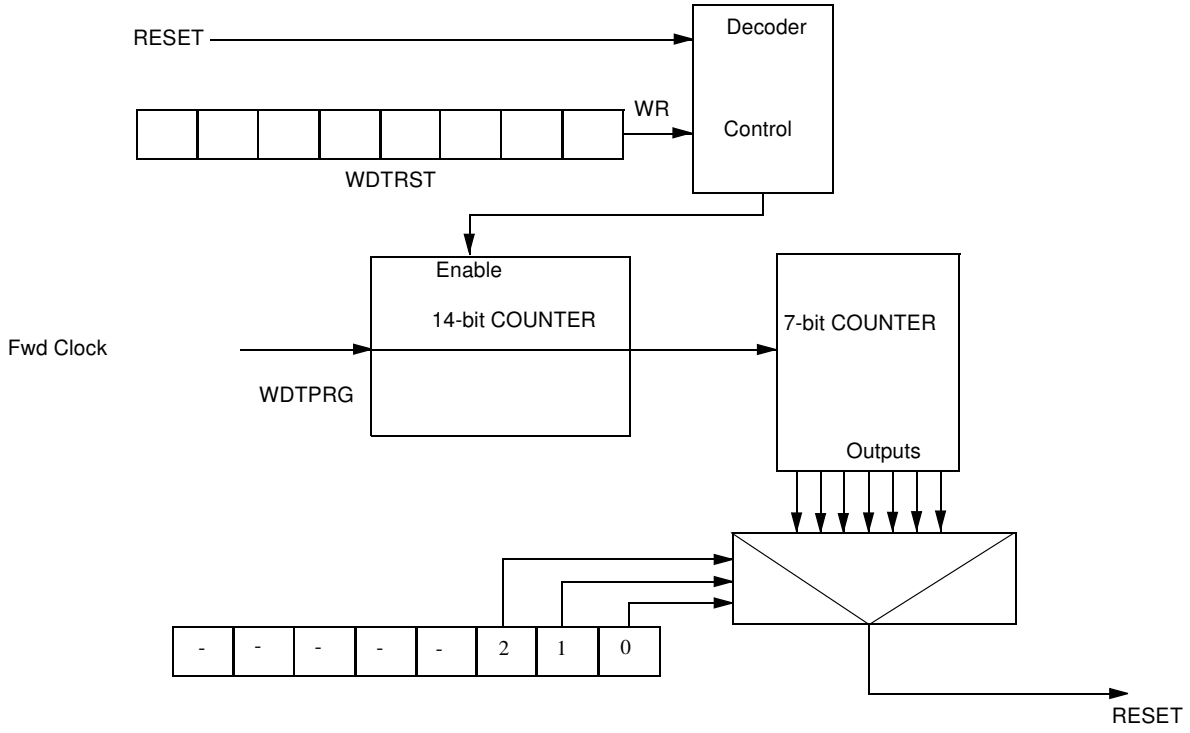

Watchdog Programming

The three lower bits (S0, S1, S2) located into WDTPRG register permit to program the WDT duration.

Table 52. Machine Cycle Count

S2	S1	S0	Machine Cycle Count
0	0	0	$2^{14} - 1$
0	0	1	$2^{15} - 1$
0	1	0	$2^{16} - 1$
0	1	1	$2^{17} - 1$
1	0	0	$2^{18} - 1$
1	0	1	$2^{19} - 1$
1	1	0	$2^{20} - 1$
1	1	1	$2^{21} - 1$

To compute WD Time-Out, the following formula is applied:

$$FTime - Out = \frac{F_{osc}}{6 \times 2^{WDX2 \wedge X2}(2^{14} \times 2^{Svalue})}$$

Note: Svalue represents the decimal value of (S2 S1 S0)

The following table outlines the time-out value for $Fosc_{XTAL}$ = 12 MHz in X1 mode

Table 53. Time-Out Computation

S2	S1	S0	Fosc = 12 MHz	Fosc = 16 MHz	Fosc = 20 MHz
0	0	0	16.38 ms	12.28 ms	9.82 ms
0	0	1	32.77 ms	24.57 ms	19.66 ms
0	1	0	65.54 ms	49.14 ms	39.32 ms
0	1	1	131.07 ms	98.28 ms	78.64 ms
1	0	0	262.14 ms	196.56 ms	157.28 ms
1	0	1	524.29 ms	393.12 ms	314.56 ms
1	1	0	1.05 s	786.24 ms	629.12 ms
1	1	1	2.10 s	1.57 s	1.25 s

Watchdog Timer During Power-down Mode and Idle

In Power-down mode the oscillator stops, which means the WDT also stops. While in Power-down mode, the user does not need to service the WDT. There are 2 methods of exiting Power-down mode: by a hardware reset or via a level activated external interrupt which is enabled prior to entering Power-down mode. When Power-down is exited with hardware reset, the Watchdog is disabled. Exiting Power-down with an interrupt is significantly different. The interrupt shall be held low long enough for the oscillator to stabilize. When the interrupt is brought high, the interrupt is serviced. To prevent the WDT from resetting the device while the interrupt pin is held low, the WDT is not started until the interrupt is pulled high. It is suggested that the WDT be reset during the interrupt service for the interrupt used to exit Power-down.

To ensure that the WDT does not overflow within a few states of exiting powerdown, it is best to reset the WDT just before entering powerdown.

In the Idle mode, the oscillator continues to run. To prevent the WDT from resetting T89C51CC01 while in Idle mode, the user should always set up a timer that will periodically exit Idle, service the WDT, and re-enter Idle mode.

Register

Table 54. WDTPRG Register

WDTPRG (S:A7h)
Watchdog Timer Duration Programming Register

7	6	5	4	3	2	1	0
–	–	–	–	–	S2	S1	S0

Bit Number	Bit Mnemonic	Description
7	-	**Reserved** The value read from this bit is indeterminate. Do not set this bit.
6	-	**Reserved** The value read from this bit is indeterminate. Do not set this bit.
5	-	**Reserved** The value read from this bit is indeterminate. Do not set this bit.
4	-	**Reserved** The value read from this bit is indeterminate. Do not set this bit.
3	-	**Reserved** The value read from this bit is indeterminate. Do not set this bit.
2	S2	**Watchdog Timer Duration selection bit 2** Work in conjunction with bit 1 and bit 0.
1	S1	**Watchdog Timer Duration selection bit 1** Work in conjunction with bit 2 and bit 0.
0	S0	**Watchdog Timer Duration selection bit 0** Work in conjunction with bit 1 and bit 2.

Reset Value = XXXX X000b

Table 55. WDTRST Register

WDTRST (S:A6h Write only)
Watchdog Timer Enable Register

7	6	5	4	3	2	1	0
–	–	–	–	–	–	–	–

Bit Number	Bit Mnemonic	Description
7	-	Watchdog Control Value

Reset Value = 1111 1111b

Note: The WDRST register is used to reset/enable the WDT by writing 1EH then E1H in sequence without instruction between these two sequences.

CAN Controller

The CAN Controller provides all the features required to implement the serial communication protocol CAN as defined by BOSCH GmbH. The CAN specification as referred to by ISO/11898 (2.0A and 2.0B) for high speed and ISO/11519-2 for low speed. The CAN Controller is able to handle all types of frames (Data, Remote, Error and Overload) and achieves a bitrate of 1-Mbit/sec. at 8 MHz[1] Crystal frequency in X2 mode.

Note: 1. At BRP = 1 sampling point will be fixed.

CAN Protocol

The CAN protocol is an international standard defined in the ISO 11898 for high speed and ISO 11519-2 for low speed.

Principles

CAN is based on a broadcast communication mechanism. This broadcast communication is achieved by using a message oriented transmission protocol. These messages are identified by using a message identifier. Such a message identifier has to be unique within the whole network and it defines not only the content but also the priority of the message.

The priority at which a message is transmitted compared to another less urgent message is specified by the identifier of each message. The priorities are laid down during system design in the form of corresponding binary values and cannot be changed dynamically. The identifier with the lowest binary number has the highest priority.

Bus access conflicts are resolved by bit-wise arbitration on the identifiers involved by each node observing the bus level bit for bit. This happens in accordance with the "wired and" mechanism, by which the dominant state overwrites the recessive state. The competition for bus allocation is lost by all nodes with recessive transmission and dominant observation. All the "losers" automatically become receivers of the message with the highest priority and do not re-attempt transmission until the bus is available again.

Message Formats

The CAN protocol supports two message frame formats, the only essential difference being in the length of the identifier. The CAN standard frame, also known as CAN 2.0 A, supports a length of 11 bits for the identifier, and the CAN extended frame, also known as CAN 2.0 B, supports a length of 29 bits for the identifier.

Can Standard Frame

Figure 39. CAN Standard Frames

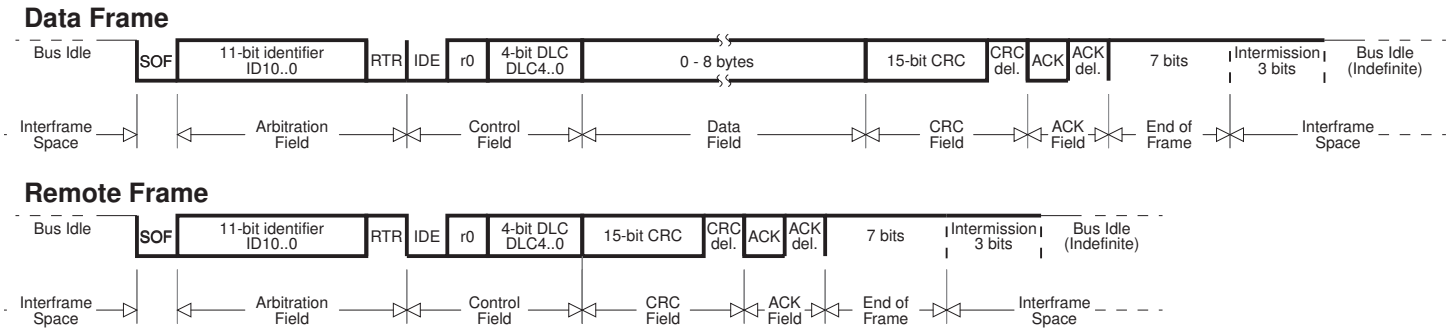

A message in the CAN standard frame format begins with the "Start Of Frame (SOF)", this is followed by the "Arbitration field" which consist of the identifier and the "Remote Transmission Request (RTR)" bit used to distinguish between the data frame and the data request frame called remote frame. The following "Control field" contains the "IDentifier Extension (IDE)" bit and the "Data Length Code (DLC)" used to indicate the

number of following data bytes in the "Data field". In a remote frame, the DLC contains the number of requested data bytes. The "Data field" that follows can hold up to 8 data bytes. The frame integrity is guaranteed by the following "Cyclic Redundant Check (CRC)" sum. The "ACKnowledge (ACK) field" compromises the ACK slot and the ACK delimiter. The bit in the ACK slot is sent as a recessive bit and is overwritten as a dominant bit by the receivers which have at this time received the data correctly. Correct messages are acknowledged by the receivers regardless of the result of the acceptance test. The end of the message is indicated by "End Of Frame (EOF)". The "Intermission Frame Space (IFS)" is the minimum number of bits separating consecutive messages. If there is no following bus access by any node, the bus remains idle.

CAN Extended Frame

Figure 40. CAN Extended Frames

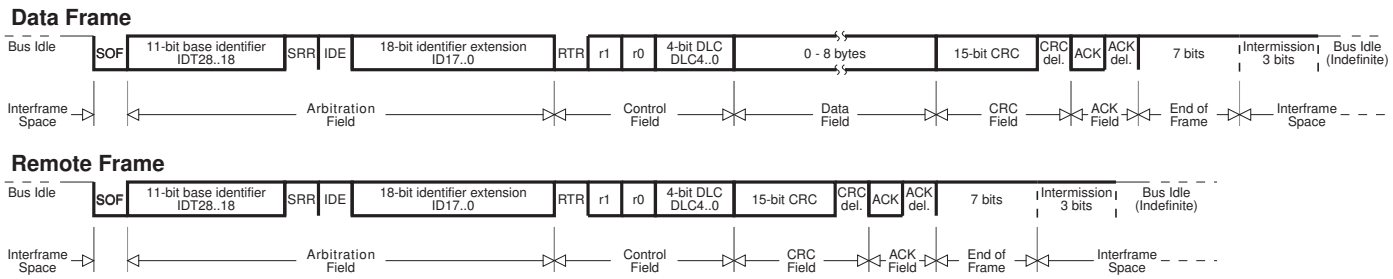

A message in the CAN extended frame format is likely the same as a message in CAN standard frame format. The difference is the length of the identifier used. The identifier is made up of the existing 11-bit identifier (base identifier) and an 18-bit extension (identifier extension). The distinction between CAN standard frame format and CAN extended frame format is made by using the IDE bit which is transmitted as dominant in case of a frame in CAN standard frame format, and transmitted as recessive in the other case.

Format Co-existence

As the two formats have to co-exist on one bus, it is laid down which message has higher priority on the bus in the case of bus access collision with different formats and the same identifier / base identifier: The message in CAN standard frame format always has priority over the message in extended format.

There are three different types of CAN modules available:

- 2.0A - Considers 29 bit ID as an error
- 2.0B Passive - Ignores 29 bit ID messages
- 2.0B Active - Handles both 11 and 29 bit ID Messages

Bit Timing

To ensure correct sampling up to the last bit, a CAN node needs to re-synchronize throughout the entire frame. This is done at the beginning of each message with the falling edge SOF and on each recessive to dominant edge.

Bit Construction

One CAN bit time is specified as four non-overlapping time segments. Each segment is constructed from an integer multiple of the Time Quantum. The Time Quantum or TQ is the smallest discrete timing resolution used by a CAN node.

Figure 41. CAN Bit Construction

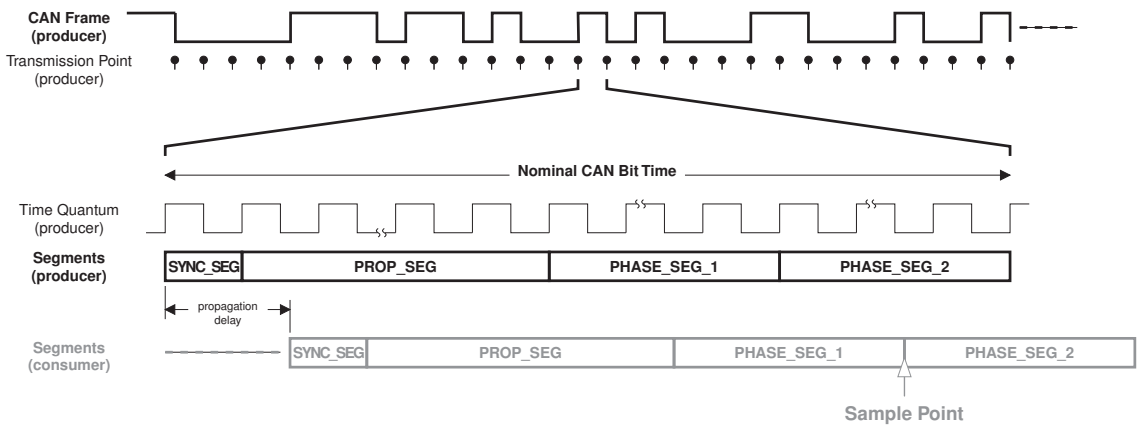

Synchronization Segment

The first segment is used to synchronize the various bus nodes.

On transmission, at the start of this segment, the current bit level is output. If there is a bit state change between the previous bit and the current bit, then the bus state change is expected to occur within this segment by the receiving nodes.

Propagation Time Segment

This segment is used to compensate for signal delays across the network.

This is necessary to compensate for signal propagation delays on the bus line and through the transceivers of the bus nodes.

Phase Segment 1

Phase Segment 1 is used to compensate for edge phase errors.

This segment may be lengthened during resynchronization.

Sample Point

The sample point is the point of time at which the bus level is read and interpreted as the value of the respective bit. Its location is at the end of Phase Segment 1 (between the two Phase Segments).

Phase Segment 2

This segment is also used to compensate for edge phase errors.

This segment may be shortened during resynchronization, but the length has to be at least as long as the information processing time and may not be more than the length of Phase Segment 1.

Information Processing Time

It is the time required for the logic to determine the bit level of a sampled bit.

The Information processing Time begins at the sample point, is measured in TQ and is fixed at 2 TQ for the Atmel CAN. Since Phase Segment 2 also begins at the sample point and is the last segment in the bit time, Phase Segment 2 minimum shall not be less than the Information processing Time.

Bit Lengthening

As a result of resynchronization, Phase Segment 1 may be lengthened or Phase Segment 2 may be shortened to compensate for oscillator tolerances. If, for example, the transmitter oscillator is slower than the receiver oscillator, the next falling edge used for resynchronization may be delayed. So Phase Segment 1 is lengthened in order to adjust the sample point and the end of the bit time.

Bit Shortening

If, on the other hand, the transmitter oscillator is faster than the receiver one, the next falling edge used for resynchronization may be too early. So Phase Segment 2 in bit N is shortened in order to adjust the sample point for bit N+1 and the end of the bit time

Synchronization Jump Width

The limit to the amount of lengthening or shortening of the Phase Segments is set by the Resynchronization Jump Width.

This segment may not be longer than Phase Segment 2.

Programming the Sample Point

Programming of the sample point allows "tuning" of the characteristics to suit the bus.

Early sampling allows more Time Quanta in the Phase Segment 2 so the Synchronization Jump Width can be programmed to its maximum. This maximum capacity to shorten or lengthen the bit time decreases the sensitivity to node oscillator tolerances, so that lower cost oscillators such as ceramic resonators may be used.

Late sampling allows more Time Quanta in the Propagation Time Segment which allows a poorer bus topology and maximum bus length.

Arbitration

Figure 42. Bus Arbitration

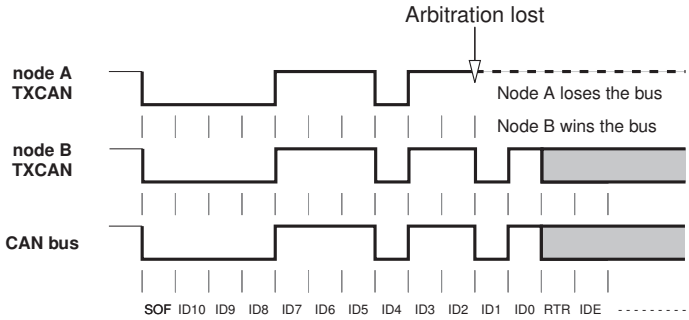

The CAN protocol handles bus accesses according to the concept called “Carrier Sense Multiple Access with Arbitration on Message Priority”.

During transmission, arbitration on the CAN bus can be lost to a competing device with a higher priority CAN Identifier. This arbitration concept avoids collisions of messages whose transmission was started by more than one node simultaneously and makes sure the most important message is sent first without time loss.

The bus access conflict is resolved during the arbitration field mostly over the identifier value. If a data frame and a remote frame with the same identifier are initiated at the same time, the data frame prevails over the remote frame (c.f. RTR bit).

Errors

The CAN protocol signals any errors immediately as they occur. Three error detection mechanisms are implemented at the message level and two at the bit level:

Error at Message Level

- Cyclic Redundancy Check (CRC)
  The CRC safeguards the information in the frame by adding redundant check bits at the transmission end. At the receiver these bits are re-computed and tested against the received bits. If they do not agree there has been a CRC error.
- Frame Check
  This mechanism verifies the structure of the transmitted frame by checking the bit fields against the fixed format and the frame size. Errors detected by frame checks are designated "format errors".

- ACK Errors
  As already mentioned frames received are acknowledged by all receivers through positive acknowledgement. If no acknowledgement is received by the transmitter of the message an ACK error is indicated.

Error at Bit Level

- Monitoring
  The ability of the transmitter to detect errors is based on the monitoring of bus signals. Each node which transmits also observes the bus level and thus detects differences between the bit sent and the bit received. This permits reliable detection of global errors and errors local to the transmitter.
- Bit Stuffing
  The coding of the individual bits is tested at bit level. The bit representation used by CAN is "Non Return to Zero (NRZ)" coding, which guarantees maximum efficiency in bit coding. The synchronization edges are generated by means of bit stuffing.

Error Signalling

If one or more errors are discovered by at least one node using the above mechanisms, the current transmission is aborted by sending an "error flag". This prevents other nodes accepting the message and thus ensures the consistency of data throughout the network. After transmission of an erroneous message that has been aborted, the sender automatically re-attempts transmission.

CAN Controller Description

The CAN Controller accesses are made through SFR.
Several operations are possible by SFR:

- arithmetic and logic operations, transfers and program control (SFR is accessible by direct addressing).
- 15 independent message objects are implemented, a pagination system manages their accesses.

Any message object can be programmed in a reception buffer block (even non-consecutive buffers). For the reception of defined messages one or several receiver message objects can be masked without participating in the buffer feature. An IT is generated when the buffer is full. The frames following the buffer-full interrupt will not be taken into account until at least one of the buffer message objects is re-enabled in reception. Higher priority of a message object for reception or transmission is given to the lower message object number.

The programmable 16-bit Timer (CANTIMER) is used to stamp each received and sent message in the CANSTMP register. This timer starts counting as soon as the CAN controller is enabled by the ENA bit in the CANGCON register.

The Time Trigger Communication (TTC) protocol is supported by the T89C51CC01.

Figure 43. CAN Controller Block Diagram

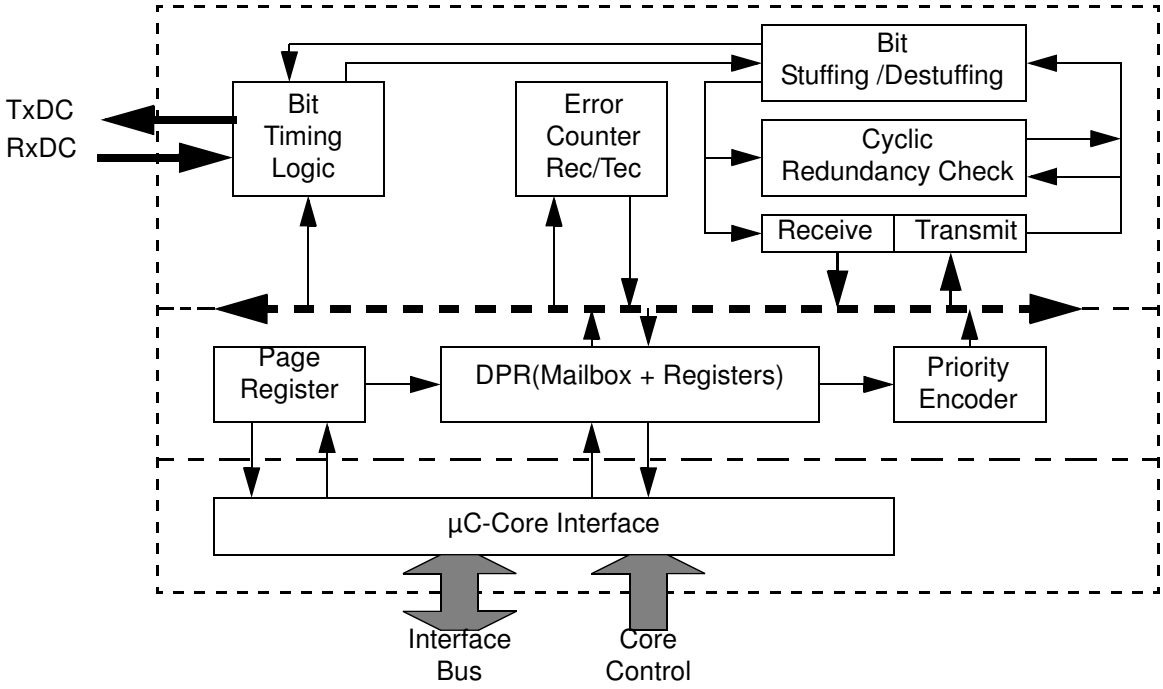

CAN Controller Mailbox and Registers Organization

The pagination allows management of the 321 registers including 300(15x20) Bytes of mailbox via 34 SFR's.

All actions on the message object window SFRs apply to the corresponding message object registers pointed by the message object number find in the Page message object register (CANPAGE) as illustrate in Figure 44.

Figure 44. CAN Controller Memory Organization

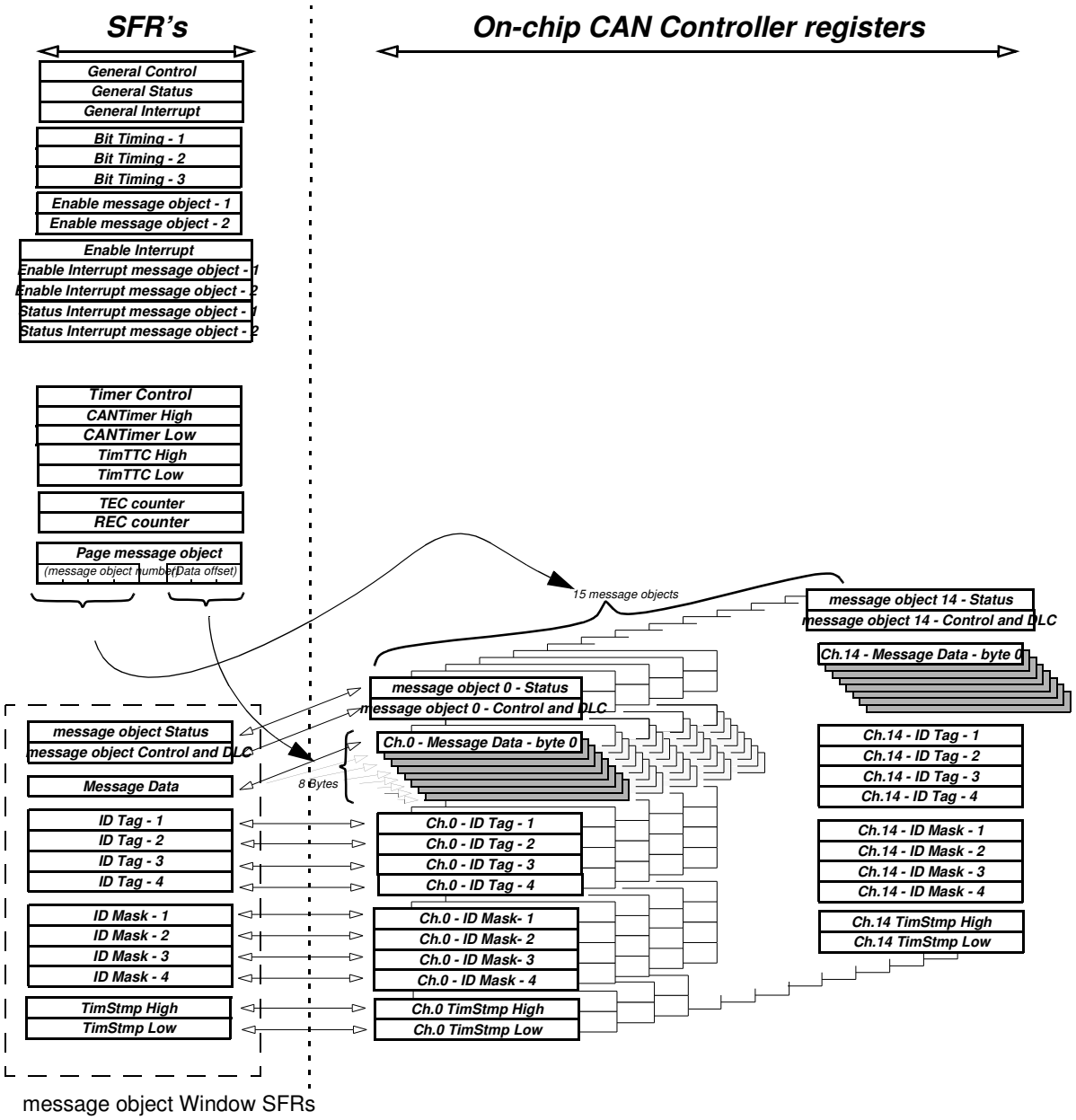

Working on Message Objects

The Page message object register (CANPAGE) is used to select one of the 15 message objects. Then, message object Control (CANCONCH) and message object Status (CANSTCH) are available for this selected message object number in the corresponding SFRs. A single register (CANMSG) is used for the message. The mailbox pointer is managed by the Page message object register with an auto-incrementation at the end of each access. The range of this counter is 8.
Note that the maibox is a pure RAM, dedicated to one message object, without overlap. In most cases, it is not necessary to transfer the received message into the standard memory. The message to be transmitted can be built directly in the maibox. Most calculations or tests can be executed in the mailbox area which provide quicker access.

CAN Controller Management

In order to enable the CAN Controller correctly the following registers have to be initialized:

- General Control (CANGCON),
- Bit Timing (CANBT 1, 2 and 3),
- And for each page of 15 message objects
  - message object Control (CANCONCH),
  - message object Status (CANSTCH).

During operation, the CAN Enable message object registers 1 and 2 (CANEN 1 and 2) gives a fast overview of the message objects availability.

The CAN messages can be handled by interrupt or polling modes.

A message object can be configured as follows:

- Transmit message object,
- Receive message object,
- Receive buffer message object.
- Disable

This configuration is made in the CONCH field of the CANCONCH register (see Table 56).

When a message object is configured, the corresponding ENCH bit of CANEN 1 and 2 register is set.

Table 56. Configuration for CONCH1:2

CONCH 1	CONCH 2	Type of Message Object
0	0	disable
0	1	Transmitter
1	0	Receiver
1	1	Receiver buffer

When a Transmitter or Receiver action of a message object is completed, the corresponding ENCH bit of the CANEN 1 and 2 register is cleared. In order to re-enable the message object, it is necessary to re-write the configuration in CANCONCH register.

Non-consecutive message objects can be used for all three types of message objects (Transmitter, Receiver and Receiver buffer),

Buffer Mode

Any message object can be used to define one buffer, including non-consecutive message objects, and with no limitation in number of message objects used up to 15.

Each message object of the buffer must be initialized CONCH2 = 1 and CONCH1 = 1;

Figure 45. Buffer mode

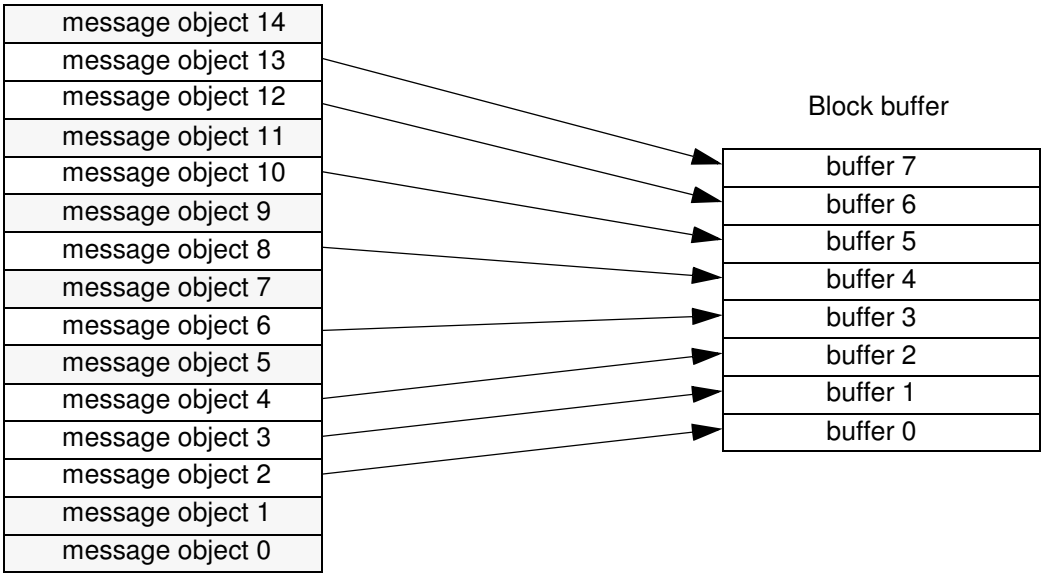

The same acceptance filter must be defined for each message objects of the buffer. When there is no mask on the identifier or the IDE, all messages are accepted.

A received frame will always be stored in the lowest free message object.

When the flag Rxok is set on one of the buffer message objects, this message object can then be read by the application. This flag must then be cleared by the software and the message object re-enabled in buffer reception in order to free the message object.

The OVRBUF flag in the CANGIT register is set when the buffer is full. This flag can generate an interrupt.

The frames following the buffer-full interrupt will not stored and no status will be overwritten in the CANSTCH registers involved in the buffer until at least one of the buffer message objects is re-enabled in reception.

This flag must be cleared by the software in order to acknowledge the interrupt.

IT CAN Management

The different interrupts are:

- Transmission interrupt,
- Reception interrupt,
- Interrupt on error (bit error, stuff error, crc error, form error, acknowledge error),
- Interrupt when Buffer receive is full,
- Interrupt on overrun of CAN Timer.

Figure 46. CAN Controller Interrupt Structure

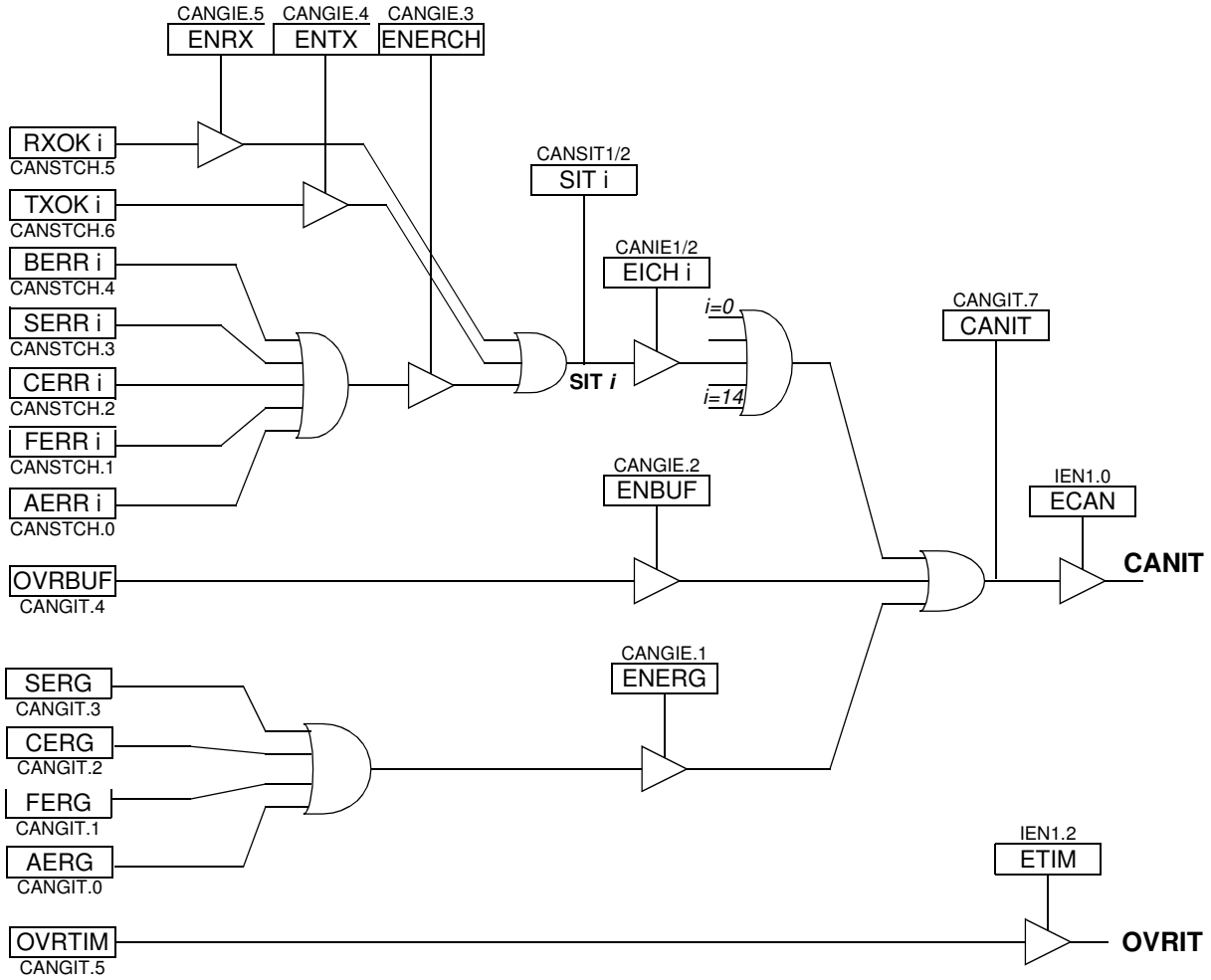

To enable a transmission interrupt:

- Enable General CAN IT in the interrupt system register,
- Enable interrupt by message object, EICHi,
- Enable transmission interrupt, ENTX.

To enable a reception interrupt:

- Enable General CAN IT in the interrupt system register,
- Enable interrupt by message object, EICHi,

- Enable reception interrupt, ENRX.

To enable an interrupt on message object error:

- Enable General CAN IT in the interrupt system register,
- Enable interrupt by message object, EICHi,
- Enable interrupt on error, ENERCH.

To enable an interrupt on general error:

- Enable General CAN IT in the interrupt system register,
- Enable interrupt on error, ENERG.

To enable an interrupt on Buffer-full condition:

- Enable General CAN IT in the interrupt system register,
- Enable interrupt on Buffer full, ENBUF.

To enable an interrupt when Timer overruns:

- Enable Overrun IT in the interrupt system register.

When an interrupt occurs, the corresponding message object bit is set in the SIT register.

To acknowledge an interrupt, the corresponding CANSTCH bits (RXOK, TXOK,...) or CANGIT bits (OVRTIM, OVRBUF,...), must be cleared by the software application.

When the CAN node is in transmission and detects a Form Error in its frame, a bit Error will also be raised. Consequently, two consecutive interrupts can occur, both due to the same error.

When a message object error occurs and is set in CANSTCH register, no general error are set in CANGIE register.

Bit Timing and Baud Rate

FSM's (Finite State Machine) of the CAN channel need to be synchronous to the time quantum. So, the input clock for bit timing is the clock used into CAN channel FSM's.

Field and segment abbreviations:

- BRP: Baud Rate Prescaler.
- TQ: Time Quantum (output of Baud Rate Prescaler).
- SYNS: SYNchronization Segment is 1 TQ long.
- PRS: PRopagation time Segment is programmable to be 1, 2, ..., 8 TQ long.
- PHS1: PHase Segment 1 is programmable to be 1, 2, ..., 8 TQ long.
- PHS2: PHase Segment 2 is programmable to be superior or equal to the INFORMATION PROCESSING TIME and inferior or equal to TPHS1.
- INFORMATION PROCESSING TIME is 2 TQ.
- SJW: (Re) Synchronization Jump Width is programmable to be minimum of PHS1 and 4.

The total number of TQ in a bit time has to be programmed at least from 8 to 25.

Figure 47. Sample And Transmission Point

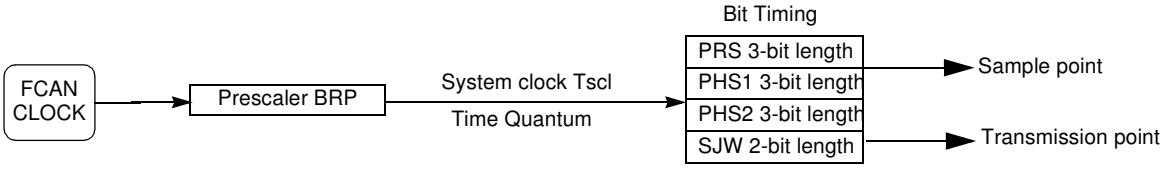

The baud rate selection is made by Tbit calculation:

Tbit = Tsyns + Tprs + Tphs1 + Tphs2

1. Tsyns = Tscl = (BRP[5..0]+ 1)/Fcan = 1TQ.
2. Tprs = (1 to 8) * Tscl = (PRS[2..0]+ 1) * Tscl
3. Tphs1 = (1 to 8) * Tscl = (PHS1[2..0]+ 1) * Tscl
4. Tphs2 = (1 to 8) * Tscl = (PHS2[2..0]+ 1) * Tscl
   Tphs2 = Max of (Tphs1 and 2TQ)
5. Tsjw = (1 to 4) * Tscl = (SJW[1..0]+ 1) * Tscl

The total number of Tscl (Time Quanta) in a bit time must be comprised between **8 to 25**.

Figure 48. General Structure of a Bit Period

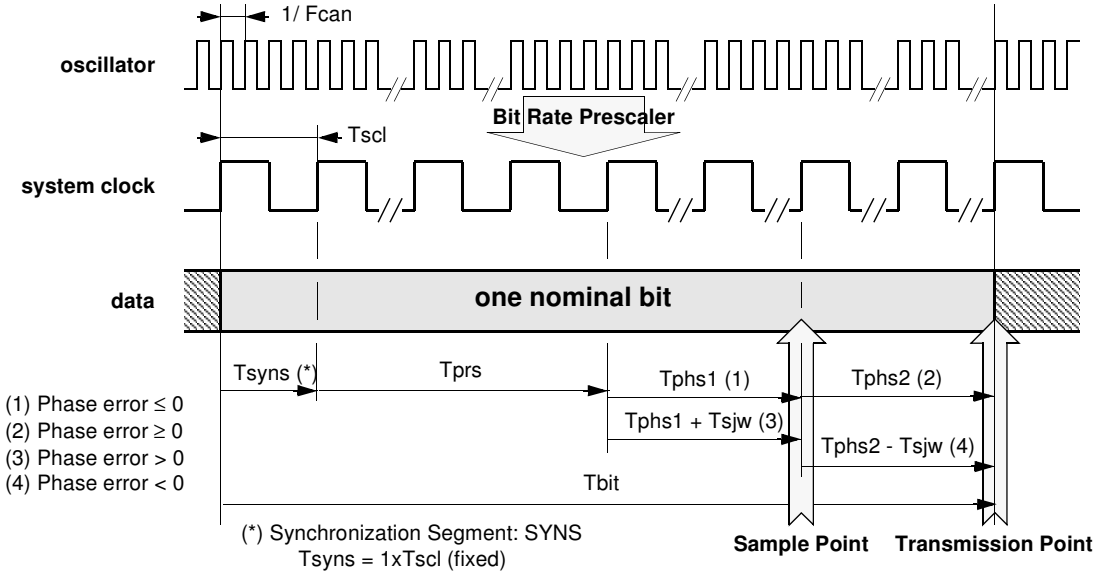

Tbit calculation: $Tbit = Tsyns + Tprs + Tphs1 + Tphs2$

example of bit timing determination for CAN baudrate of 500kbit/s:

Fosc = 12 MHz in X1 mode => FCAN = 6 MHz

Verify that the CAN baud rate you want is an integer division of FCAN clock.

FCAN/CAN baudrate = 6 MHz/500 kHz = 12

The time quanta TQ must be comprised between 8 and 25: TQ = 12 and **BRP = 0**

Define the various timing parameters: Tbit = Tsyns + Tprs + Tphs1 + Tphs2 = 12TQ

Tsyns = 1TQ and Tsjw =1TQ => **SJW = 0**

If we chose a sample point at 66.6% => Tphs2 = 4TQ => **PHS2 = 3**

Tbit = 12 = 4 + 1 + Tphs1 + Tprs, let us choose Tprs = 3 Tphs1 = 4

PHS1 = 3 and **PRS = 2**

BRP = 0 so CANBT1 = 00h

SJW = 0 and PRS = 2 so CANBT2 = 04h

PHS2 = 3 and PHS1 = 3 so CANBT3 = 36h

Fault Confinement

With respect to fault confinement, a unit may be in one of the three following status:

- error active
- error passive
- bus off

An error active unit takes part in bus communication and can send an active error frame when the CAN macro detects an error.

An error passive unit cannot send an active error frame. It takes part in bus communication, but when an error is detected, a passive error frame is sent. Also, after a transmission, an error passive unit will wait before initiating further transmission.

A bus off unit is not allowed to have any influence on the bus.

For fault confinement, two error counters (TEC and REC) are implemented.

See CAN Specification for details on Fault confinement.

Figure 49. Line Error Mode

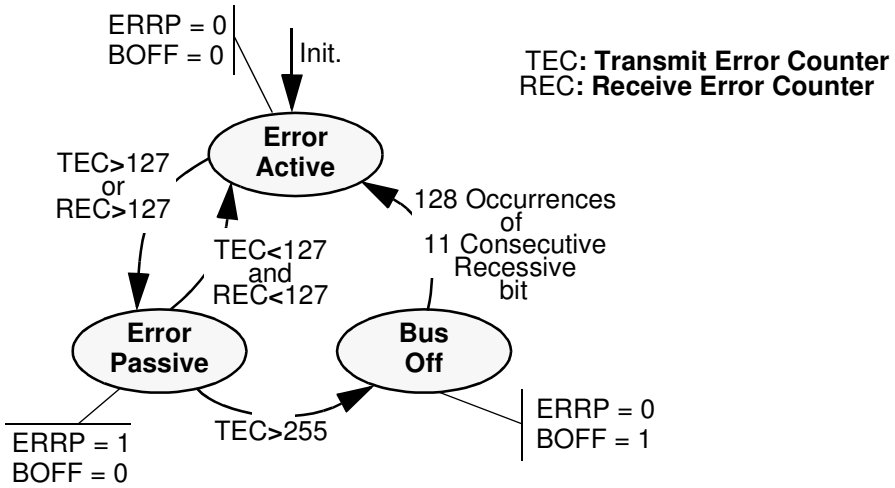

Acceptance Filter

Upon a reception hit (i.e., a good comparison between the ID+RTR+RB+IDE received and an ID+RTR+RB+IDE specified while taking the comparison mask into account) the ID+RTR+RB+IDE received are written over the ID TAG Registers.

ID => IDT0-29

RTR => RTRTAG

RB => RB0-1TAG

IDE => IDE in CANCONCH register

Figure 50. Acceptance filter block diagram

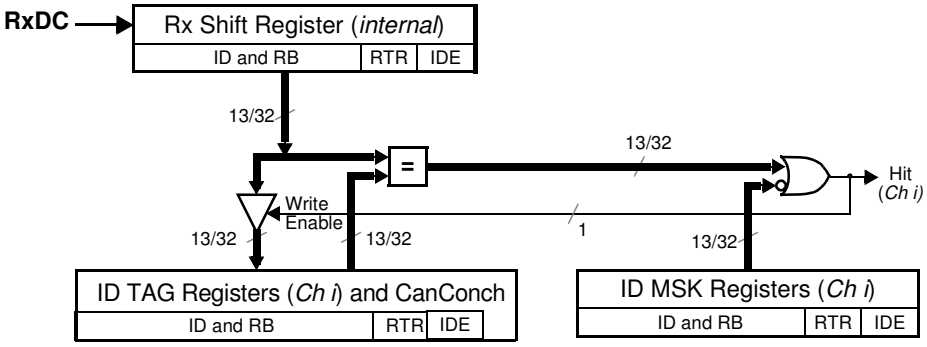


```
example:
To accept only ID = 318h in part A.
ID MSK = 111 1111 1111 b
ID TAG = 011 0001 1000 b
```

Data and Remote Frame

Description of the different steps for:

- Data Frame

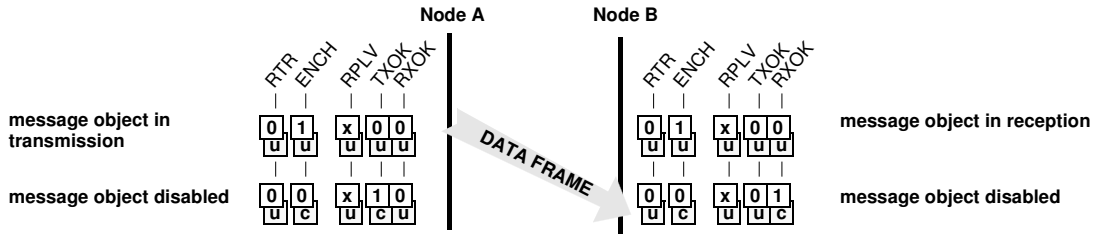

- Remote Frame, With Automatic Reply,

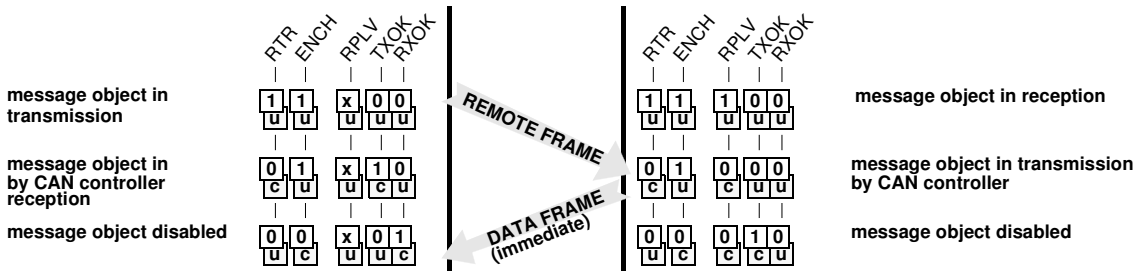

- Remote Frame

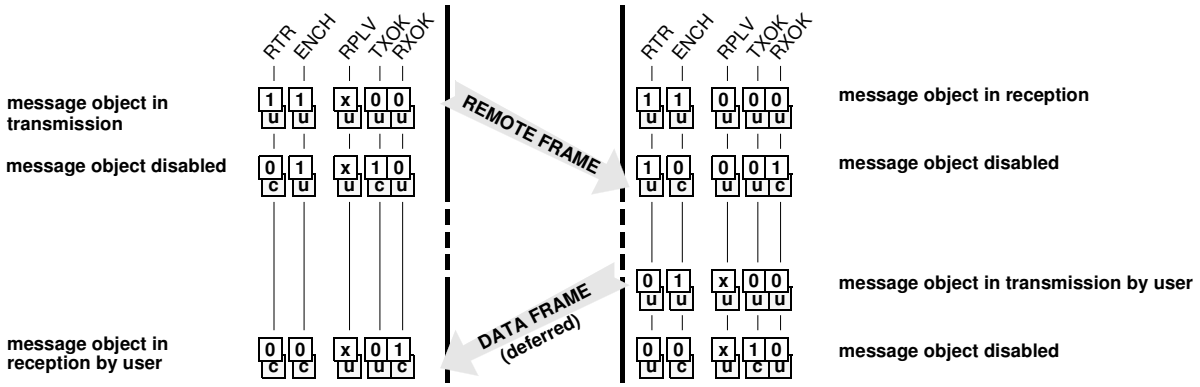

i u : modified by user i c : modified by CAN

Time Trigger Communication (TTC) and Message Stamping

The T89C51CC01 has a programmable 16-bit Timer (CANTIMH and CANTIML) for message stamp and TTC.

This CAN Timer starts after the CAN controller is enabled by the ENA bit in the CANGCON register.

Two modes in the timer are implemented:

- Time Trigger Communication:
  - Capture of this timer value in the CANTTCH and CANTTCL registers on Start Of Frame (SOF) or End Of Frame (EOF), depending on the SYNCTTC bit in the CANGCON register, when the network is configured in TTC by the TTC bit in the CANGCON register.

Note: In this mode, CAN ***only sends the frame once, even if an error occurs***.

- Message Stamping
  - Capture of this timer value in the CANSTMPH and CANSTMPL registers of the message object which received or sent the frame.
  - All messages can be stamps.
  - The stamping of a received frame occurs when the RxOk flag is set.
  - The stamping of a sent frame occurs when the TxOk flag is set.

The CAN Timer works in a roll-over from FFFFh to 0000h which serves as a time base.

When the timer roll-over from FFFFh to 0000h, an interrupt is generated if the ETIM bit in the interrupt enable register IEN1 is set.

Figure 51. Block Diagram of CAN Timer

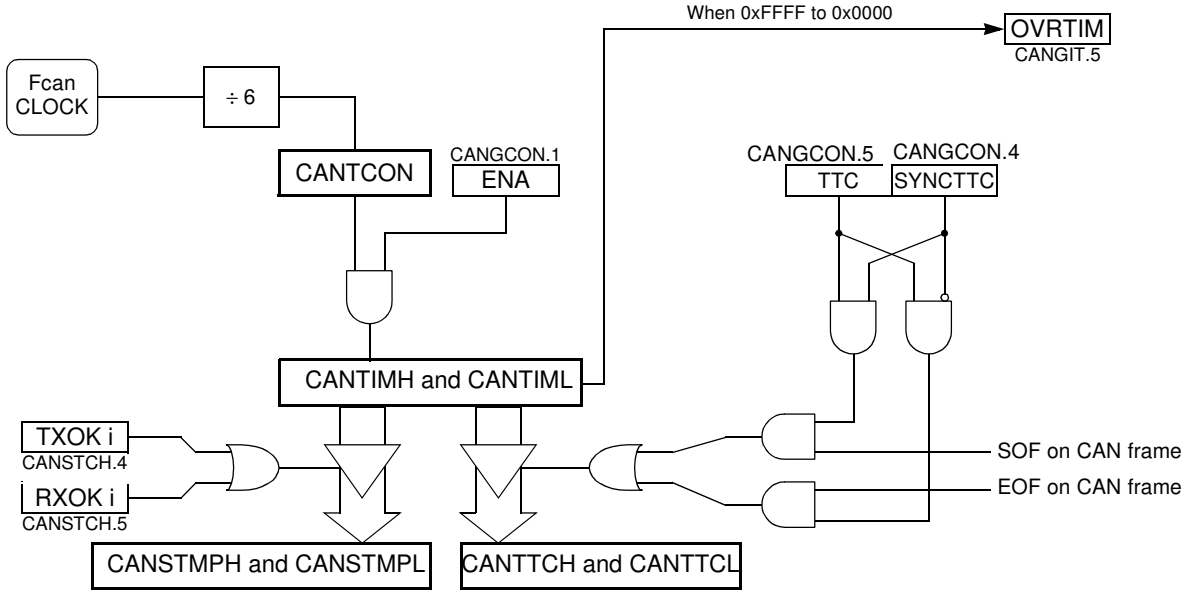

CAN Autobaud and Listening Mode

To activate the Autobaud feature, the AUTOBAUD bit in the CANGCON register must be set. In this mode, the CAN controller is only listening to the line without acknowledging the received messages. It cannot send any message. The error flags are updated. The bit timing can be adjusted until no error occurs (good configuration find).

In this mode, the error counters are frozen.

To go back to the standard mode, the AUTOBAUD bit must be cleared.

Figure 52. Autobaud Mode

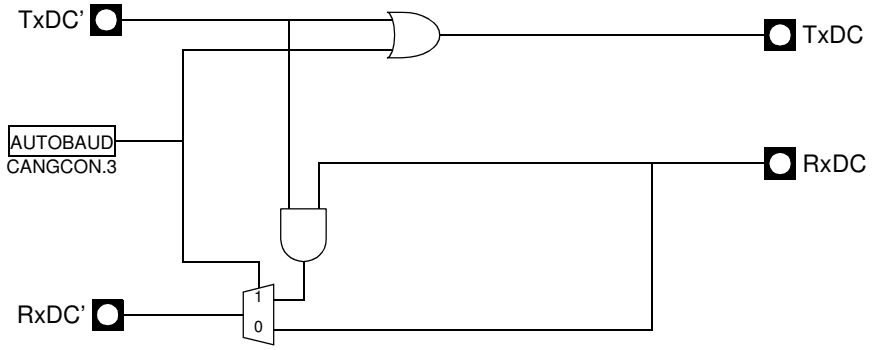

Routines Examples

1. Init of CAN macro

```
// Reset the CAN macro
 CANGCON = 01h;
// Disable CAN interrupts
 ECAN   = 0;
 ETIM   = 0;
// Init the Mailbox
 for num_page =0; num_page <15; num_page++
{
    CANPAGE = num_channel << 4;
    CANCONCH = 00h
    CANSTCH = 00h;
    CANIDT1 = 00h;
    CANIDT2 = 00h;
    CANIDT3 = 00h;
    CANIDT4 = 00h;
    CANIDM1 = 00h;
    CANIDM2 = 00h;
    CANIDM3 = 00h;
    CANIDM4 = 00h;
    for num_data =0; num_data <8; num_data++)
      {
      CANMSG = 00h;
      }
}
// Configure the bit timing
 CANBT1 = xxh
 CANBT2 = xxh
 CANBT3 = xxh
```

```
// Enable the CAN macro
 CANGCON = 02h
```

2. Configure message object 3 in reception to receive only standard (11-bit identifier) message 100h

```
// Select the message object 3
 CANPAGE = 30h
// Enable the interrupt on this message object
 CANIE2 = 08h
// Clear the status and control register
 CANSTCH = 00h
 CANCONCH = 00h
// Init the acceptance filter to accept only message 100h in standard mode
 CANIDT1 = 20h
 CANIDT2 = 00h
 CANIDT3 = 00h
 CANIDT4 = 00h
 CANIDM1 = FFh
 CANIDM2 = FFh
 CANIDM3 = FFh
 CANIDM4 = FFh
// Enable channel in reception
 CANCONCH = 88h // enable reception
```

Note: To enable the CAN interrupt in reception:

```
EA = 1
ECAN = 1
CANGIE = 20h
```

3. Send a message on the message object 12

```
// Select the message object 12
 CANPAGE = C0h
// Enable the interrupt on this message object
 CANIE1 = 01h
// Clear the Status register
 CANSTCH = 00h;
// load the identifier to send (ex: 555h)
 CANIDT1 = AAh;
 CANIDT2 = A0h;
// load data to send
 CANMSG = 00h
 CANMSG = 01h
 CANMSG = 02h
 CANMSG = 03h
 CANMSG = 04h
 CANMSG = 05h
 CANMSG = 06h
 CANMSG = 07h
// configure the control register
 CANCONCH = 18h
```

4. Interrupt routine

```
// Save the current CANPAGE

// Find the first message object which generate an interrupt in CANSIT1 and
CANSIT2

// Select the corresponding message object

// Analyse the CANSTCH register to identify which kind of interrupt is
generated

// Manage the interrupt

// Clear the status register CANSTCH = 00h;

// if it is not a channel interrupt but a general interrupt
// Manage the general interrupt and clear CANGIT register

// restore the old CANPAGE
```

CAN SFR's

Table 57. CAN SFR's With Reset Values

	0/8[1]	1/9	2/A	3/B	4/C	5/D	6/E	7/F	
F8h	IPL1 xxxx x000	CH 0000 0000	CCAP0H 0000 0000	CCAP1H 0000 0000	CCAP2H 0000 0000	CCAP3H 0000 0000	CCAP4H 0000 0000		FFh
F0h	B 0000 0000		ADCLK xxx0 0000	ADCON x000 0000	ADDL 0000 0000	ADDH 0000 0000	ADCF 0000 0000	IPH1 xxxx x000	F7h
E8h	IEN1 xxxx x000	CL 0000 0000	CCAP0L 0000 0000	CCAP1L 0000 0000	CCAP2L 0000 0000	CCAP3L 0000 0000	CCAP4L 0000 0000		EFh
E0h	ACC 0000 0000								E7h
D8h	CCON 00x0 0000	CMOD 00xx x000	CCAPM0 x000 0000	CCAPM1 x000 0000	CCAPM2 x000 0000	CCAPM3 x000 0000	CCAPM4 x000 0000		DFh
D0h	PSW 0000 0000	FCON 0000 0000	EECON xxxx xx00						D7h
C8h	T2CON 0000 0000	T2MOD xxxx xx00	RCAP2L 0000 0000	RCAP2H 0000 0000	TL2 0000 0000	TH2 0000 0000	CANEN1 x000 0000	CANEN2 0000 0000	CFh
C0h	P4 xxxx xx11	CANGIE 1100 0000	CANIE1 x000 0000	CANIE2 0000 0000	CANIDM1 xxxx xxxx	CANIDM2 xxxx xxxx	CANIDM3 xxxx xxxx	CANIDM4 xxxx xxxx	C7h
B8h	IPL0 x000 0000	SADEN 0000 0000	CANSIT1 x000 0000	CANSIT2 0000 0000	CANIDT1 xxxx xxxx	CANIDT2 xxxx xxxx	CANIDT3 xxxx xxxx	CANIDT4 xxxx xxxx	BFh
B0h	P3 1111 1111	CANPAGE 0000 0000	CANSTCH xxxx xxxx	CANCONCH xxxx xxxx	CANBT1 xxxx xxxx	CANBT2 xxxx xxxx	CANBT3 xxxx xxxx	IPH0 x000 0000	B7h
A8h	IEN0 0000 0000	SADDR 0000 0000	CANGSTA 1010 0000	CANGCON 0000 0000	CANTIML 0000 0000	CANTIMH 0000 0000	CANSTMPL xxxx xxxx	CANSTMPH xxxx xxxx	AFh
A0h	P2 1111 1111	CANTCON 0000 0000	AUXR1 xxxx 00x0	CANMSG xxxx xxxx	CANTTCL 0000 0000	CANTTCH 0000 0000	WDTRST 1111 1111	WDTPRG xxxx x000	A7h
98h	SCON 0000 0000	SBUF 0000 0000		CANGIT 0x00 0000	CANTEC 0000 0000	CANREC 0000 0000			9Fh
90h	P1 1111 1111								97h
88h	TCON 0000 0000	TMOD 0000 0000	TL0 0000 0000	TL1 0000 0000	TH0 0000 0000	TH1 0000 0000	AUXR x00x 1100	CKCON 0000 0000	8Fh
80h	P0 1111 1111	SP 0000 0111	DPL 0000 0000	DPH 0000 0000				PCON 00x1 0000	87h
	0/8[1]	1/9	2/A	3/B	4/C	5/D	6/E	7/F	

Table 58. CANGCON Register

CANGCON (S:ABh)
CAN General Control Register

7	6	5	4	3	2	1	0
ABRQ	OVRQ	TTC	SYNCTTC	AUTOBAUD	TEST	ENA	GRES

Bit Number	Bit Mnemonic	Description
7	ABRQ	**Abort Request** Not an auto-resetable bit. A reset of the ENCH bit (message object control and DLC register) is done for each message object. The pending transmission communications are immediately aborted but the on-going communication will be terminated normally, setting the appropriate status flags, TXOK or RXOK.
6	OVRQ	**Overload frame request (initiator)** Auto-resetable bit. Set to send an overload frame after the next received message. Cleared by the hardware at the beginning of transmission of the overload frame.
5	TTC	**Network in Timer Trigger Communication** set to select node in TTC. clear to disable TTC features.
4	SYNCTTC	**Synchronization of TTC** When this bit is set the TTC timer is caught on the last bit of the End Of Frame. When this bit is clear the TTC timer is caught on the Start Of Frame. This bit is only used in the TTC mode.
3	AUTOBAUD	**AUTOBAUD** set to active listening mode. Clear to disable listening mode
2	TEST	Test mode. The test mode is intended for factory testing and not for customer use.
1	ENA/$\overline{\text{STB}}$	**Enable/Standby CAN Controller** When this bit is set, it enables the CAN controller and its input clock. When this bit is clear, the on-going communication is terminated normally and the CAN controller state of the machine is frozen (the ENCH bit of each message object does not change). In the standby mode, the transmitter constantly provides a recessive level; the receiver is not activated and the input clock is stopped in the CAN controller. During the disable mode, the registers and the mailbox remain accessible. Note that two clock periods are needed to start the CAN controller state of the machine.
0	GRES	**General Reset (software reset)** Auto-resetable bit. This reset command is ‘ORed’ with the hardware reset in order to reset the controller. After a reset, the controller is disabled.

Reset Value = 0000 0000b

Table 59. CANGSTA Register

CANGSTA (S:AAh Read Only)
CAN General Status Register

7	6	5	4	3	2	1	0
-	OVFG	-	TBSY	RBSY	ENFG	BOFF	ERRP

Bit Number	Bit Mnemonic	Description
7	-	**Reserved** The values read from this bit is indeterminate. Do not set this bit.
6	OVFG	**Overload Frame Flag** This status bit is set by the hardware as long as the produced overload frame is sent. This flag does not generate an interrupt
5	-	**Reserved** The values read from this bit is indeterminate. Do not set this bit.
4	TBSY	**Transmitter Busy** This status bit is set by the hardware as long as the CAN transmitter generates a frame (remote, data, overload or error frame) or an ack field. This bit is also active during an InterFrame Spacing if a frame must be sent. This flag does not generate an interrupt.
3	RBSY	**Receiver Busy** This status bit is set by the hardware as long as the CAN receiver acquires or monitors a frame. This flag does not generate an interrupt.
2	ENFG	**Enable On-chip CAN Controller Flag** Because an enable/disable command is not effective immediately, this status bit gives the true state of a chosen mode. This flag does not generate an interrupt.
1	BOFF	**Bus Off Mode** **see Figure 49**
0	ERRP	**Error Passive Mode** **see Figure 49**

Reset Value = x0x0 0000b

Table 60. CANGIT Register

CANGIT (S:9Bh)
CAN General Interrupt

7	6	5	4	3	2	1	0
CANIT	**-**	**OVRTIM**	**OVRBUF**	**SERG**	**CERG**	**FERG**	**AERG**

Bit Number	Bit Mnemonic	Description
7	CANIT	**General Interrupt Flag**[1] This status bit is the image of all the CAN controller interrupts sent to the interrupt controller. It can be used in the case of the polling method.
6	-	**Reserved** The values read from this bit is indeterminate. Do not set this bit.
5	OVRTIM	**Overrun CAN Timer** This status bit is set when the CAN timer switches 0xFFFF to 0x0000. If the bit ETIM in the IE1 register is set, an interrupt is generated. Clear this bit in order to reset the interrupt.
4	OVRBUF	**Overrun BUFFER** 0 - no interrupt. 1 - IT turned on This bit is set when the buffer is full. Bit resetable by user. see Figure 46.
3	SERG	**Stuff Error General** Detection of more than five consecutive bits with the same polarity. This flag can generate an interrupt. resetable by user.
2	CERG	**CRC Error General** The receiver performs a CRC check on each destuffed received message from the start of frame up to the data field. If this checking does not match with the destuffed CRC field, a CRC error is set. This flag can generate an interrupt. resetable by user.
1	FERG	**Form Error General** The form error results from one or more violations of the fixed form in the following bit fields: CRC delimiter acknowledgment delimiter end_of_frame This flag can generate an interrupt. resetable by user.
0	AERG	**Acknowledgment Error General** No detection of the dominant bit in the acknowledge slot. This flag can generate an interrupt. resetable by user.

Note: 1. This field is Read Only.

Reset Value = 0x00 0000b

Table 61. CANTEC Register

CANTEC (S:9Ch Read Only)
CAN Transmit Error Counter

7	6	5	4	3	2	1	0
TEC7	TEC6	TEC5	TEC4	TEC3	TEC2	TEC1	TEC0

Bit Number	Bit Mnemonic	Description
7-0	TEC7:0	**Transmit Error Counter** **see Figure 49**

Reset Value = 00h

Table 62. CANREC Register

CANREC (S:9Dh Read Only)
CAN Reception Error Counter

7	6	5	4	3	2	1	0
REC7	REC6	REC5	REC4	REC3	REC2	REC1	REC0

Bit Number	Bit Mnemonic	Description
7-0	REC7:0	**Reception Error Counter** **see Figure 49**

Reset Value = 00h

Table 63. CANGIE Register

CANGIE (S:C1h)
CAN General Interrupt Enable

7	6	5	4	3	2	1	0
-	-	ENRX	ENTX	ENERCH	ENBUF	ENERG	-

Bit Number	Bit Mnemonic	Description
7-6	-	**Reserved** The values read from these bits are indeterminate. Do not set these bits.
5	ENRX	**Enable Receive Interrupt** 0 - Disable 1 - Enable
4	ENTX	**Enable Transmit Interrupt** 0 - Disable 1 - Enable
3	ENERCH	**Enable Message Object Error Interrupt** 0 - Disable 1 - Enable
2	ENBUF	**Enable BUF Interrupt** 0 - Disable 1 - Enable
1	ENERG	**Enable General Error Interrupt** 0 - Disable 1 - Enable
0	-	**Reserved** The value read from this bit is indeterminate. Do not set this bit.

Note: See Figure 46

Reset Value = xx00 000xb

Table 64. CANEN1 Register

CANEN1 (S:CEh Read Only)
CAN Enable Message Object Registers 1

7	6	5	4	3	2	1	0
-	ENCH14	ENCH13	ENCH12	ENCH11	ENCH10	ENCH9	ENCH8

Bit Number	Bit Mnemonic	Description
7	-	**Reserved** The values read from this bit is indeterminate. Do not set this bit.
6-0	ENCH14:8	**Enable Message Object** 0 - message object is disabled => the message object is free for a new emission or reception. 1 - message object is enabled. This bit is resetable by re-writing the CANCONCH of the corresponding message object.

Reset Value = x000 0000b

Table 65. CANEN2 Register

CANEN2 (S:CFh Read Only)
CAN Enable Message Object Registers 2

7	6	5	4	3	2	1	0
ENCH7	**ENCH6**	**ENCH5**	**ENCH4**	**ENCH3**	**ENCH2**	**ENCH1**	**ENCH0**

Bit Number	Bit Mnemonic	Description
7-0	ENCH7:0	**Enable Message Object** 0 - message object is disabled => the message object is free for a new emission or reception. 1 - message object is enabled. This bit is resetable by re-writing the CANCONCH of the corresponding message object.

Reset Value = 0000 0000b

Table 66. CANSIT1 Register

CANSIT1 (S:BAh Read Only)
CAN Status Interrupt Message Object Registers 1

7	6	5	4	3	2	1	0
-	**SIT14**	**SIT13**	**SIT12**	**SIT11**	**SIT10**	**SIT9**	**SIT8**

Bit Number	Bit Mnemonic	Description
7	-	**Reserved** The values read from this bit is indeterminate. Do not set this bit.
6-0	SIT14:8	**Status of Interrupt by Message Object** 0 - no interrupt. 1 - IT turned on. Reset when interrupt condition is cleared by user. SIT14:8 = 0b 0000 1001 -> IT's on message objects 11 and 8. see Figure 46.

Reset Value = x000 0000b

Table 67. CANSIT2 Register

CANSIT2 (S:BBh Read Only)

CAN Status Interrupt Message Object Registers 2

7	6	5	4	3	2	1	0
SIT7	**SIT6**	**SIT5**	**SIT4**	**SIT3**	**SIT2**	**SIT1**	**SIT0**

Bit Number	Bit Mnemonic	Description
7-0	SIT7:0	**Status of Interrupt by Message Object** 0 - no interrupt. 1 - IT turned on. Reset when interrupt condition is cleared by user. SIT7:0 = 0b 0000 1001 -> IT's on message objects 3 and 0 see Figure 46.

Reset Value = 0000 0000b

Table 68. CANIE1 Register

CANIE1 (S:C2h)
CAN Enable Interrupt Message Object Registers 1

7	6	5	4	3	2	1	0
-	**IECH14**	**IECH13**	**IECH12**	**IECH11**	**IECH10**	**IECH9**	**IECH8**

Bit Number	Bit Mnemonic	Description
7	-	**Reserved** The values read from this bit is indeterminate. Do not set this bit.
6-0	IECH14:8	**Enable interrupt by Message Object** 0 - disable IT. 1 - enable IT. IECH14:8 = 0b 0000 1100 -> Enable IT's of message objects 11 and 10. see Figure 46.

Reset Value = x000 0000b

Table 69. CANIE2 Register

CANIE2 (S:C3h)
CAN Enable Interrupt Message Object Registers 2

7	6	5	4	3	2	1	0
IECH 7	**IECH 6**	**IECH 5**	**IECH 4**	**IECH 3**	**IECH 2**	**IECH 1**	**IECH 0**

Bit Number	Bit Mnemonic	Description
7-0	IECH7:0	**Enable interrupt by Message Object** 0 - disable IT. 1 - enable IT. IECH7:0 = 0b 0000 1100 -> Enable IT's of message objects 3 and 2.

Reset Value = 0000 0000b

Table 70. CANBT1 Register

CANBT1 (S:B4h)
CAN Bit Timing Registers 1

7	6	5	4	3	2	1	0
-	**BRP 5**	**BRP 4**	**BRP 3**	**BRP 2**	**BRP 1**	**BRP 0**	**-**

Bit Number	Bit Mnemonic	Description
7	-	**Reserved** The value read from this bit is indeterminate. Do not set this bit.
6-1	BRP5:0	**Baud rate prescaler** The period of the CAN controller system clock Tscl is programmable and determines the individual bit timing. $Tscl = \frac{BRP[5..0] + 1}{Fcan}$
0	-	**Reserved** The value read from this bit is indeterminate. Do not set this bit.

Note: The CAN controller bit timing registers must be accessed only if the CAN controller is disabled with the ENA bit of the CANGCON register set to 0.
See Figure 48.

No default value after reset.

Table 71. CANBT2 Register

CANBT2 (S:B5h)
CAN Bit Timing Registers 2

7	6	5	4	3	2	1	0
-	SJW 1	SJW 0	-	PRS 2	PRS 1	PRS 0	-

Bit Number	Bit Mnemonic	Description
7	-	**Reserved** The value read from this bit is indeterminate. Do not set this bit.
6-5	SJW1:0	**Re-synchronization Jump Width** To compensate for phase shifts between clock oscillators of different bus controllers, the controller must re-synchronize on any relevant signal edge of the current transmission. The synchronization jump width defines the maximum number of clock cycles. A bit period may be shortened or lengthened by a re-synchronization. Tsjw = Tscl x (SJW [1..0] +1)
4	-	**Reserved** The value read from this bit is indeterminate. Do not set this bit.
3-1	PRS2:0	**Programming Time Segment** This part of the bit time is used to compensate for the physical delay times within the network. It is twice the sum of the signal propagation time on the bus line, the input comparator delay and the output driver delay. Tprs = Tscl x (PRS[2..0] + 1)
0	-	**Reserved** The value read from this bit is indeterminate. Do not set this bit.

Note: The CAN controller bit timing registers must be accessed only if the CAN controller is disabled with the ENA bit of the CANGCON register set to 0.
See Figure 48.

No default value after reset.

Table 72. CANBT3 Register

CANBT3 (S:B6h)
CAN Bit Timing Registers 3

7	6	5	4	3	2	1	0
-	PHS2 2	PHS2 1	PHS2 0	PHS1 2	PHS1 1	PHS1 0	SMP

Bit Number	Bit Mnemonic	Description
7	-	**Reserved** The value read from this bit is indeterminate. Do not set this bit.
6-4	PHS2 2:0	**Phase Segment 2** This phase is used to compensate for phase edge errors. This segment can be shortened by the re-synchronization jump width. Tphs2 = Tscl x (PHS2[2..0] + 1) Phase segment 2 is the maximum of Phase segment1 and the Information Processing Time (= 2TQ).
3-1	PHS1 2:0	**Phase Segment 1** This phase is used to compensate for phase edge errors. This segment can be lengthened by the re-synchronization jump width. Tphs1 = Tscl x (PHS1[2..0] + 1)
0	SMP	**Sample Type** 0 - once, at the sample point. 1 - three times, the threefold sampling of the bus is the sample point and twice over a distance of a 1/2 period of the Tscl. The result corresponds to the majority decision of the three values.

Note: The CAN controller bit timing registers must be accessed only if the CAN controller is disabled with the ENA bit of the CANGCON register set to 0.
See Figure 48.

No default value after reset.

Table 73. CANPAGE Register

CANPAGE (S:B1h)
CAN Message Object Page Register

7	6	5	4	3	2	1	0
CHNB 3	CHNB 2	CHNB 1	CHNB 0	AINC	INDX2	INDX1	INDX0

Bit Number	Bit Mnemonic	Description
7-4	CHNB3:0	**Selection of Message Object Number** The available numbers are: 0 to 14 (see Figure 44).
3	AINC	**Auto Increment of the Index (active low)** 0 - auto-increment of the index (default value). 1 - non-auto-increment of the index.
2-0	INDX2:0	**Index** Byte location of the data field for the defined message object (see Figure 44).

Reset Value = 0000 0000b

Table 74. CANCONCH Register

CANCONCH (S:B3h)
CAN Message Object Control and DLC Register

7	6	5	4	3	2	1	0
CONCH 1	CONCH 0	RPLV	IDE	DLC 3	DLC 2	DLC 1	DLC 0

Bit Number	Bit Mnemonic	Description
7-6	CONCH1:0	**Configuration of Message Object** **CONCH1 CONCH0** 0 0: disable 0 1: Launch transmission 1 0: Enable Reception 1 1: Enable Reception Buffer Note: The user must re-write the configuration to enable the corresponding bit in the CANEN1:2 registers.
5	RPLV	**Reply Valid** Used in the automatic reply mode after receiving a remote frame 0 - reply not ready. 1 - reply ready and valid.
4	IDE	**Identifier Extension** 0 - CAN standard rev 2.0 A (ident = 11 bits). 1 - CAN standard rev 2.0 B (ident = 29 bits).
3-0	DLC3:0	**Data Length Code** Number of Bytes in the data field of the message. The range of DLC is from 0 up to 8. This value is updated when a frame is received (data or remote frame). If the expected DLC differs from the incoming DLC, a warning appears in the CANSTCH register.

No default value after reset

Table 75. CANSTCH Register

CANSTCH (S:B2h)
CAN Message Object Status Register

7	6	5	4	3	2	1	0
DLCW	TXOK	RXOK	BERR	SERR	CERR	FERR	AERR

Bit Number	Bit Mnemonic	Description
7	DLCW	**Data Length Code Warning** The incoming message does not have the DLC expected. Whatever the frame type, the DLC field of the CANCONCH register is updated by the received DLC.
6	TXOK	**Transmit OK** The communication enabled by transmission is completed. When the controller is ready to send a frame, if two or more message objects are enabled as producers, the lower index message object (0 to 13) is supplied first. This flag can generate an interrupt and it must be cleared by software.
5	RXOK	**Receive OK** The communication enabled by reception is completed. In the case of two or more message object reception hits, the lower index message object (0 to 13) is updated first. This flag can generate an interrupt and it must be cleared by software.
4	BERR	**Bit Error (Only in Transmission)** The bit value monitored is different from the bit value sent. Exceptions: the monitored recessive bit sent as a dominant bit during the arbitration field and the acknowledge slot detecting a dominant bit during the sending of an error frame. This flag can generate an interrupt and it must be cleared by software.
3	SERR	**Stuff Error** Detection of more than five consecutive bits with the same polarity. This flag can generate an interrupt and it must be cleared by software.
2	CERR	**CRC Error** The receiver performs a CRC check on each destuffed received message from the start of frame up to the data field. If this checking does not match with the destuffed CRC field, a CRC error is set. This flag can generate an interrupt and it must be cleared by software.
1	FERR	**Form Error** The form error results from one or more violations of the fixed form in the following bit fields: CRC delimiter acknowledgment delimiter end_of_frame This flag can generate an interrupt.
0	AERR	**Acknowledgment Error** No detection of the dominant bit in the acknowledge slot. This flag can generate an interrupt and it must be cleared by software.

Note: See Figure 46.

No default value after reset.

Table 76. CANIDT1 Register for V2.0 part A

CANIDT1 for V2.0 part A (S:BCh)
CAN Identifier Tag Registers 1

7	6	5	4	3	2	1	0
IDT 10	IDT 9	IDT 8	IDT 7	IDT 6	IDT 5	IDT 4	IDT 3

Bit Number	Bit Mnemonic	Description
7-0	IDT10:3	**IDentifier tag value** See Figure 50.

No default value after reset.

Table 77. CANIDT2 Register for V2.0 part A

CANIDT2 for V2.0 part A (S:BDh)
CAN Identifier Tag Registers 2

7	6	5	4	3	2	1	0
IDT 2	IDT 1	IDT 0	-	-	-	-	-

Bit Number	Bit Mnemonic	Description
7-5	IDT2:0	**IDentifier tag value** See Figure 50.
4-0	-	**Reserved** The values read from these bits are indeterminate. Do not set these bits.

No default value after reset.

Table 78. CANIDT3 Register for V2.0 part A

CANIDT3 for V2.0 part A (S:BEh)
CAN Identifier Tag Registers 3

7	6	5	4	3	2	1	0
-	-	-	-	-	-	-	-

Bit Number	Bit Mnemonic	Description
7-0	-	**Reserved** The values read from these bits are indeterminate. Do not set these bits.

No default value after reset.

Table 79. CANIDT4 Register for V2.0 part A

CANIDT4 for V2.0 part A (S:BFh)
CAN Identifier Tag Registers 4

7	6	5	4	3	2	1	0
-	-	-	-	-	RTRTAG	-	RB0TAG

Bit Number	Bit Mnemonic	Description
7-3	-	**Reserved** The values read from these bits are indeterminate. Do not set these bits.
2	RTRTAG	**Remote Transmission Request Tag Value**.
1	-	**Reserved** The values read from this bit are indeterminate. Do not set these bit.
0	RB0TAG	**Reserved Bit 0 Tag Value.**

No default value after reset.

Table 80. CANIDT1 Register for V2.0 part B

CANIDT1 for V2.0 part B (S:BCh)
CAN Identifier Tag Registers 1

7	6	5	4	3	2	1	0
IDT 28	IDT 27	IDT 26	IDT 25	IDT 24	IDT 23	IDT 22	IDT 21

Bit Number	Bit Mnemonic	Description
7-0	IDT28:21	**IDentifier Tag Value** See Figure 50.

No default value after reset.

Table 81. CANIDT2 Register for V2.0 part B

CANIDT2 for V2.0 part B (S:BDh)
CAN Identifier Tag Registers 2

7	6	5	4	3	2	1	0
IDT 20	IDT 19	IDT 18	IDT 17	IDT 16	IDT 15	IDT 14	IDT 13

Bit Number	Bit Mnemonic	Description
7-0	IDT20:13	**IDentifier Tag Value** See Figure 50.

No default value after reset.

Table 82. CANIDT3 Register for V2.0 part B

CANIDT3 for V2.0 part B (S:BEh)
CAN Identifier Tag Registers 3

7	6	5	4	3	2	1	0
IDT 12	IDT 11	IDT 10	IDT 9	IDT 8	IDT 7	IDT 6	IDT 5

Bit Number	Bit Mnemonic	Description
7-0	IDT12:5	**IDentifier Tag Value** See Figure 50.

No default value after reset.

Table 83. CANIDT4 Register for V2.0 part B

CANIDT4 for V2.0 part B (S:BFh)
CAN Identifier Tag Registers 4

7	6	5	4	3	2	1	0
IDT 4	IDT 3	IDT 2	IDT 1	IDT 0	RTRTAG	RB1TAG	RB0TAG

Bit Number	Bit Mnemonic	Description
7-3	IDT4:0	**IDentifier Tag Value** See Figure 50.
2	RTRTAG	**Remote Transmission Request Tag Value**
1	RB1TAG	**Reserved bit 1 Tag Value**
0	RB0TAG	**Reserved bit 0 Tag Value**

No default value after reset.

Table 84. CANIDM1 Register for V2.0 part A

CANIDM1 for V2.0 part A (S:C4h)
CAN Identifier Mask Registers 1

7	6	5	4	3	2	1	0
IDMSK 10	IDMSK 9	IDMSK 8	IDMSK 7	IDMSK 6	IDMSK 5	IDMSK 4	IDMSK 3

Bit Number	Bit Mnemonic	Description
7-0	IDTMSK10:3	**IDentifier mask value** 0 - comparison true forced. 1 - bit comparison enabled. See Figure 50.

No default value after reset.

Table 85. CANIDM2 Register for V2.0 part A

CANIDM2 for V2.0 part A (S:C5h)
CAN Identifier Mask Registers 2

7	6	5	4	3	2	1	0
IDMSK 2	**IDMSK 1**	**IDMSK 0**	**-**	**-**	**-**	**-**	**-**

Bit Number	Bit Mnemonic	Description
7-5	IDTMSK2:0	**IDentifier Mask Value** 0 - comparison true forced. 1 - bit comparison enabled. See Figure 50.
4-0	-	**Reserved** The values read from these bits are indeterminate. Do not set these bits.

No default value after reset.

Table 86. CANIDM3 Register for V2.0 part A

CANIDM3 for V2.0 part A (S:C6h)
CAN Identifier Mask Registers 3

7	6	5	4	3	2	1	0
-	**-**	**-**	**-**	**-**	**-**	**-**	**-**

Bit Number	Bit Mnemonic	Description
7-0	-	**Reserved** The values read from these bits are indeterminate.

No default value after reset.

Table 87. CANIDM4 Register for V2.0 part A

CANIDM4 for V2.0 part A (S:C7h)
CAN Identifier Mask Registers 4

7	6	5	4	3	2	1	0
-	-	-	-	-	RTRMSK	-	IDEMSK

Bit Number	Bit Mnemonic	Description
7-3	-	**Reserved** The values read from these bits are indeterminate. Do not set these bits.
2	RTRMSK	**Remote Transmission Request Mask Value** 0 - comparison true forced. 1 - bit comparison enabled.
1	-	**Reserved** The value read from this bit is indeterminate. Do not set this bit.
0	IDEMSK	**IDentifier Extension Mask Value** 0 - comparison true forced. 1 - bit comparison enabled.

Note: The ID Mask is only used for reception.

No default value after reset.

Table 88. CANIDM1 Register for V2.0 part B

CANIDM1 for V2.0 part B (S:C4h)
CAN Identifier Mask Registers 1

7	6	5	4	3	2	1	0
IDMSK 28	IDMSK 27	IDMSK 26	IDMSK 25	IDMSK 24	IDMSK 23	IDMSK 22	IDMSK 21

Bit Number	Bit Mnemonic	Description
7-0	IDMSK28:21	**IDentifier Mask Value** 0 - comparison true forced. 1 - bit comparison enabled. See Figure 50.

Note: The ID Mask is only used for reception.

No default value after reset.

Table 89. CANIDM2 Register for V2.0 part B

CANIDM2 for V2.0 part B (S:C5h)
CAN Identifier Mask Registers 2

7	6	5	4	3	2	1	0
IDMSK 20	**IDMSK 19**	**IDMSK 18**	**IDMSK 17**	**IDMSK 16**	**IDMSK 15**	**IDMSK 14**	**IDMSK 13**

Bit Number	Bit Mnemonic	Description
7-0	IDMSK20:13	**IDentifier Mask Value** 0 - comparison true forced. 1 - bit comparison enabled. See Figure 50.

Note: The ID Mask is only used for reception.

No default value after reset.

Table 90. CANIDM3 Register for V2.0 part B

CANIDM3 for V2.0 part B (S:C6h)
CAN Identifier Mask Registers 3

7	6	5	4	3	2	1	0
IDMSK 12	**IDMSK 11**	**IDMSK 10**	**IDMSK 9**	**IDMSK 8**	**IDMSK 7**	**IDMSK 6**	**IDMSK 5**

Bit Number	Bit Mnemonic	Description
7-0	IDMSK12:5	**IDentifier Mask Value** 0 - comparison true forced. 1 - bit comparison enabled. See Figure 50.

Note: The ID Mask is only used for reception.

No default value after reset.

Table 91. CANIDM4 Register for V2.0 part B

CANIDM4 for V2.0 part B (S:C7h)
CAN Identifier Mask Registers 4

7	6	5	4	3	2	1	0
IDMSK 4	**IDMSK 3**	**IDMSK 2**	**IDMSK 1**	**IDMSK 0**	**RTRMSK**	**-**	**IDEMSK**

Bit Number	Bit Mnemonic	Description
7-3	IDMSK4:0	**IDentifier Mask Value** 0 - comparison true forced. 1 - bit comparison enabled. See Figure 50.
2	RTRMSK	**Remote Transmission Request Mask Value** 0 - comparison true forced. 1 - bit comparison enabled.
1	-	**Reserved** The value read from this bit is indeterminate. Do not set this bit.
0	IDEMSK	**IDentifier Extension Mask Value** 0 - comparison true forced. 1 - bit comparison enabled.

Note: The ID Mask is only used for reception.

No default value after reset.

Table 92. CANMSG Register

CANMSG (S:A3h)
CAN Message Data Register

7	6	5	4	3	2	1	0
MSG 7	**MSG 6**	**MSG 5**	**MSG 4**	**MSG 3**	**MSG 2**	**MSG 1**	**MSG 0**

Bit Number	Bit Mnemonic	Description
7-0	MSG7:0	**Message Data** This register contains the mailbox data byte pointed at the page message object register. After writing in the page message object register, this byte is equal to the specified message location (in the mailbox) of the pre-defined identifier + index. If auto-incrementation is used, at the end of the data register writing or reading cycle, the mailbox pointer is auto-incremented. The range of the counting is 8 with no end loop (0, 1,..., 7, 0,...)

No default value after reset.

Table 93. CANTCON Register

CANTCON (S:A1h)
CAN Timer ClockControl

7	6	5	4	3	2	1	0
TPRESC 7	TPRESC 6	TPRESC 5	TPRESC 4	TPRESC 3	TPRESC 2	TPRESC 1	TPRESC 0

Bit Number	Bit Mnemonic	Description
7-0	TPRESC7:0	**Timer Prescaler of CAN Timer** This register is a prescaler for the main timer upper counter range = 0 to 255. See Figure 51.

Reset Value = 00h

Table 94. CANTIMH Register

CANTIMH (S:ADh)
CAN Timer High

7	6	5	4	3	2	1	0
CANGTIM 15	CANGTIM 14	CANGTIM 13	CANGTIM 12	CANGTIM 11	CANGTIM 10	CANGTIM 9	CANGTIM 8

Bit Number	Bit Mnemonic	Description
7-0	CANGTIM15:8	**High byte of Message Timer** See Figure 51.

Reset Value = 0000 0000b

Table 95. CANTIML Register

CANTIML (S:ACh)
CAN Timer Low

7	6	5	4	3	2	1	0
CANGTIM 7	CANGTIM 6	CANGTIM 5	CANGTIM 4	CANGTIM 3	CANGTIM 2	CANGTIM 1	CANGTIM 0

Bit Number	Bit Mnemonic	Description
7-0	CANGTIM7:0	**Low byte of Message Timer** See Figure 51.

Reset Value = 0000 0000b

Table 96. CANSTMPH Register

CANSTMPH (S:AFh Read Only)
CAN Stamp Timer High

7	6	5	4	3	2	1	0
TIMSTMP 15	TIMSTMP 14	TIMSTMP 13	TIMSTMP 12	TIMSTMP 11	TIMSTMP 10	TIMSTMP 9	TIMSTMP 8

Bit Number	Bit Mnemonic	Description
7-0	TIMSTMP15:8	**High byte of Time Stamp** See Figure 51.

No default value after reset

Table 97. CANSTMPL Register

CANSTMPL (S:AEh Read Only)
CAN Stamp Timer Low

7	6	5	4	3	2	1	0
TIMSTMP 7	TIMSTMP 6	TIMSTMP 5	TIMSTMP 4	TIMSTMP 3	TIMSTMP 2	TIMSTMP 1	TIMSTMP 0

Bit Number	Bit Mnemonic	Description
7-0	TIMSTMP7:0	**Low byte of Time Stamp** See Figure 51.

No default value after reset

Table 98. CANTTCH Register

CANTTCH (S:A5h Read Only)
CAN TTC Timer High

7	6	5	4	3	2	1	0
TIMTTC 15	TIMTTC 14	TIMTTC 13	TIMTTC 12	TIMTTC 11	TIMTTC 10	TIMTTC 9	TIMTTC 8

Bit Number	Bit Mnemonic	Description
7-0	TIMTTC15:8	**High byte of TTC Timer** See Figure 51.

Reset Value = 0000 0000b

Table 99. CANTTCL Register

CANTTCL (S:A4h Read Only)
CAN TTC Timer Low

7	6	5	4	3	2	1	0
TIMTTC 7	**TIMTTC 6**	**TIMTTC 5**	**TIMTTC 4**	**TIMTTC 3**	**TIMTTC 2**	**TIMTTC 1**	**TIMTTC 0**

Bit Number	Bit Mnemonic	Description
7-0	TIMTTC7:0	**Low byte of TTC Timer** See Figure 51.

Reset Value = 0000 0000b

Programmable Counter Array (PCA)

The PCA provides more timing capabilities with less CPU intervention than the standard timer/counters. Its advantages include reduced software overhead and improved accuracy. The PCA consists of a dedicated timer/counter which serves as the time base for an array of five compare/capture modules. Its clock input can be programmed to count any of the following signals:

- PCA clock frequency/6 (see “clock” section)
- PCA clock frequency/2
- Timer 0 overflow
- External input on ECI (P1.2)

Each compare/capture modules can be programmed in any one of the following modes:

- rising and/or falling edge capture,
- software timer,
- high-speed output,
- pulse width modulator.

Module 4 can also be programmed as a Watchdog timer. see the "PCA Watchdog Timer" section.

When the compare/capture modules are programmed in capture mode, software timer, or high speed output mode, an interrupt can be generated when the module executes its function. All five modules plus the PCA timer overflow share one interrupt vector.

The PCA timer/counter and compare/capture modules share Port 1 for external I/Os. These pins are listed below. If the pin is not used for the PCA, it can still be used for standard I/O.

PCA Component	External I/O Pin
16-bit Counter	P1.2/ECI
16-bit Module 0	P1.3/CEX0
16-bit Module 1	P1.4/CEX1
16-bit Module 2	P1.5/CEX2
16-bit Module 3	P1.6/CEX3
16-bit Module 4	P1.7/CEX4

PCA Timer

The PCA timer is a common time base for all five modules (see Figure 53). The timer count source is determined from the CPS1 and CPS0 bits in the CMOD SFR (see Table 8) and can be programmed to run at:

- 1/6 the PCA clock frequency.
- 1/2 the PCA clock frequency.
- the Timer 0 overflow.
- the input on the ECI pin (P1.2).

Figure 53. PCA Timer/Counter

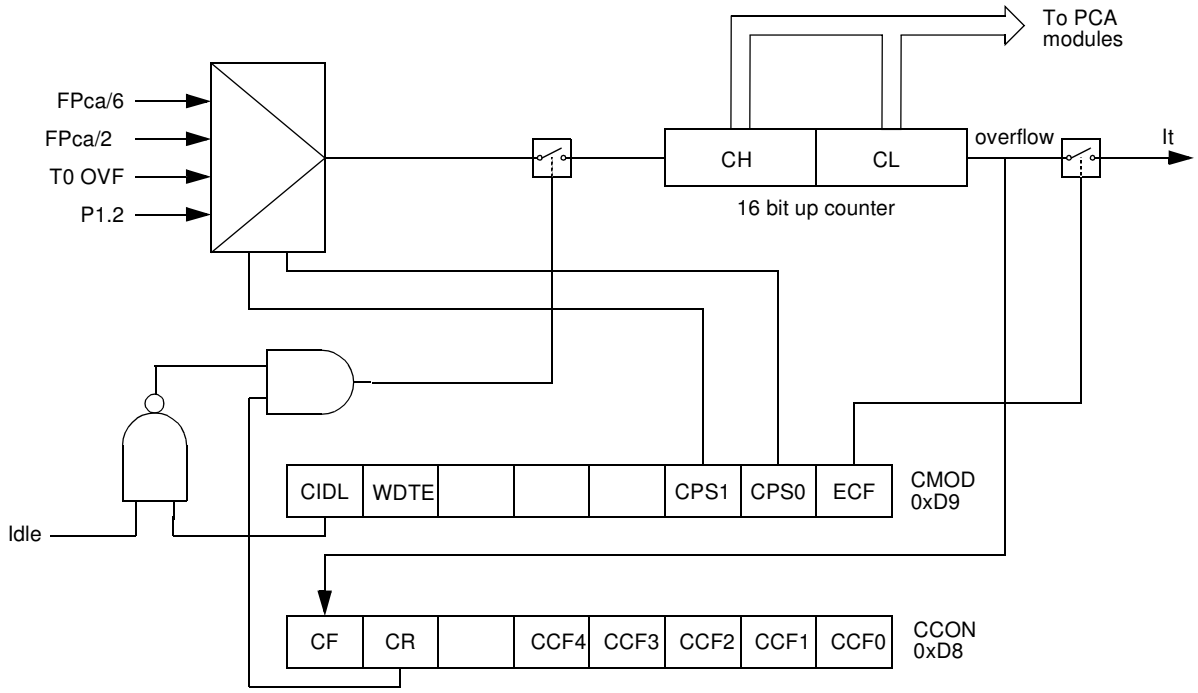

The CMOD register includes three additional bits associated with the PCA.

- The CIDL bit which allows the PCA to stop during idle mode.
- The WDTE bit which enables or disables the Watchdog function on module 4.
- The ECF bit which when set causes an interrupt and the PCA overflow flag CF in CCON register to be set when the PCA timer overflows.

The CCON register contains the run control bit for the PCA and the flags for the PCA timer and each module.

- The CR bit must be set to run the PCA. The PCA is shut off by clearing this bit.
- The CF bit is set when the PCA counter overflows and an interrupt will be generated if the ECF bit in CMOD register is set. The CF bit can only be cleared by software.
- The CCF0:4 bits are the flags for the modules (CCF0 for module0...) and are set by hardware when either a match or a capture occurs. These flags also can be cleared by software.

PCA Modules

Each one of the five compare/capture modules has six possible functions. It can perform:

- 16-bit Capture, positive-edge triggered
- 16-bit Capture, negative-edge triggered
- 16-bit Capture, both positive and negative-edge triggered
- 16-bit Software Timer
- 16-bit High Speed Output
- 8-bit Pulse Width Modulator.

In addition module 4 can be used as a Watchdog Timer.

Each module in the PCA has a special function register associated with it (CCAPM0 for module 0 ...). The CCAPM0:4 registers contain the bits that control the mode that each module will operate in.

- The ECCF bit enables the CCF flag in the CCON register to generate an interrupt when a match or compare occurs in the associated module.
- The PWM bit enables the pulse width modulation mode.
- The TOG bit when set causes the CEX output associated with the module to toggle when there is a match between the PCA counter and the module's capture/compare register.
- The match bit MAT when set will cause the CCFn bit in the CCON register to be set when there is a match between the PCA counter and the module's capture/compare register.
- The two bits CAPN and CAPP in CCAPMn register determine the edge that a capture input will be active on. The CAPN bit enables the negative edge, and the CAPP bit enables the positive edge. If both bits are set both edges will be enabled.
- The bit ECOM in CCAPM register when set enables the comparator function.

PCA Interrupt

Figure 54. PCA Interrupt System

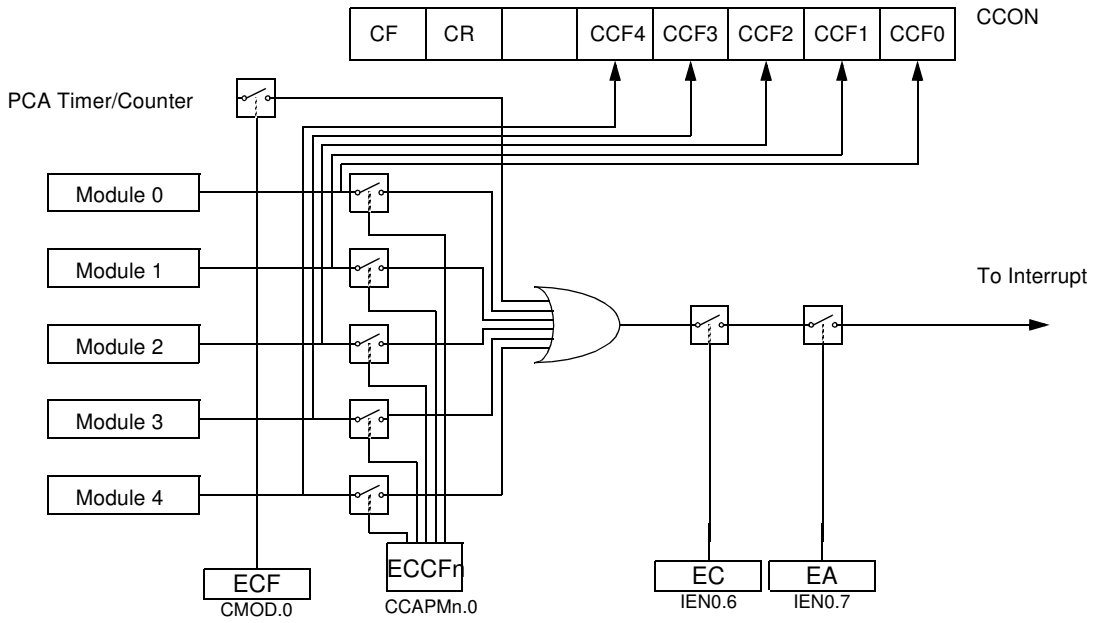

PCA Capture Mode

To use one of the PCA modules in capture mode either one or both of the CCAPM bits CAPN and CAPP for that module must be set. The external CEX input for the module (on port 1) is sampled for a transition. When a valid transition occurs the PCA hardware loads the value of the PCA counter registers (CH and CL) into the module's capture registers (CCAPnL and CCAPnH). If the CCFn bit for the module in the CCON SFR and the ECCFn bit in the CCAPMn SFR are set then an interrupt will be generated.

Figure 55. PCA Capture Mode

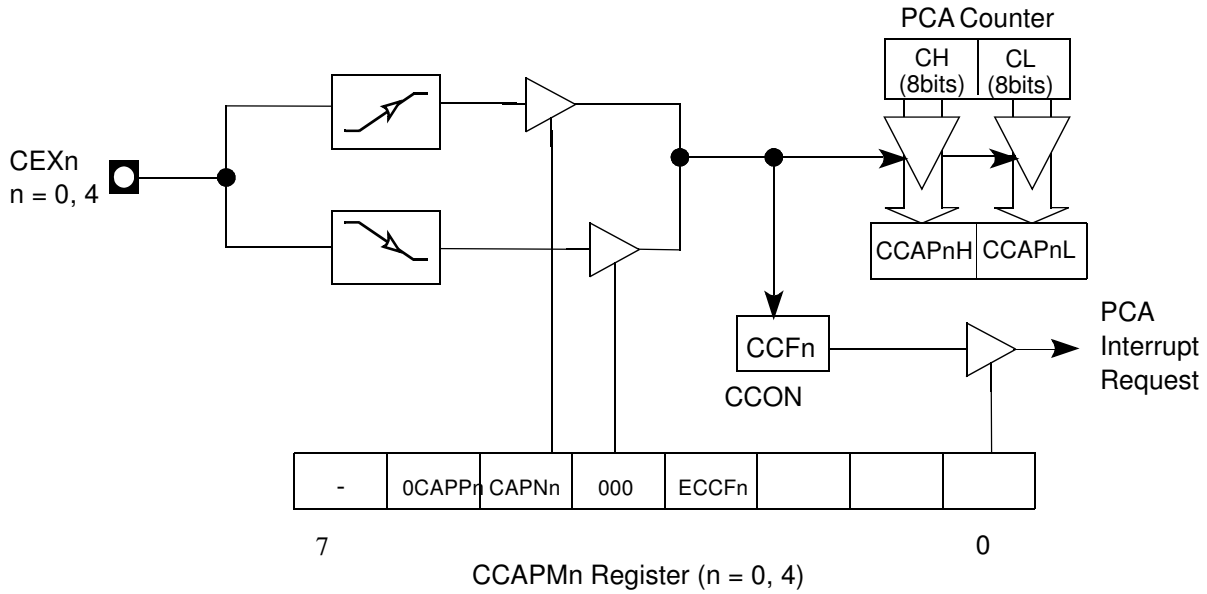

16-bit Software Timer Mode

The PCA modules can be used as software timers by setting both the ECOM and MAT bits in the modules CCAPMn register. The PCA timer will be compared to the module's capture registers and when a match occurs an interrupt will occur if the CCFn (CCON SFR) and the ECCFn (CCAPMn SFR) bits for the module are both set.

Figure 56. PCA 16-bit Software Timer and High Speed Output Mode

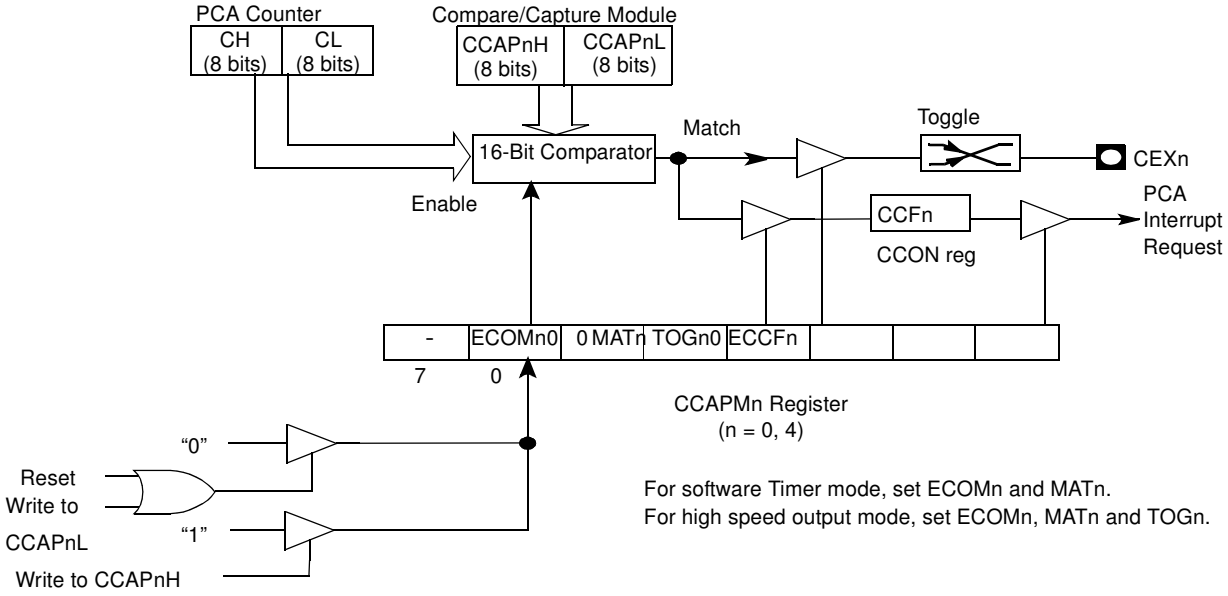

High Speed Output Mode

In this mode the CEX output (on port 1) associated with the PCA module will toggle each time a match occurs between the PCA counter and the module's capture registers. To activate this mode the TOG, MAT, and ECOM bits in the module's CCAPMn SFR must be set.

Figure 57. PCA High Speed Output Mode

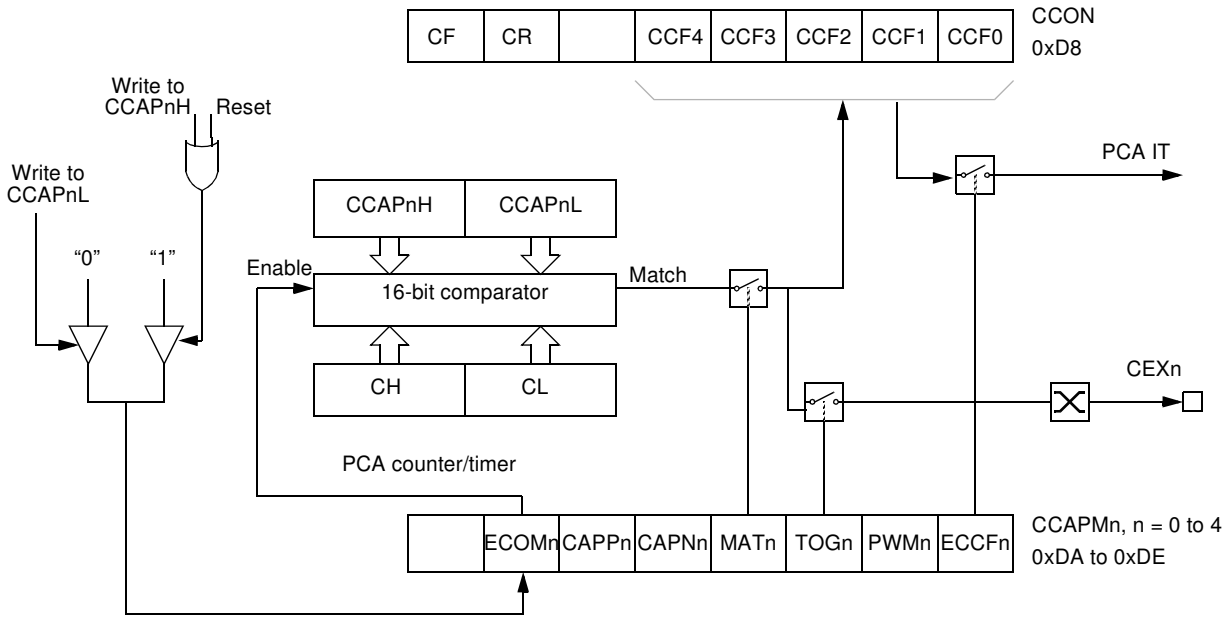

Pulse Width Modulator Mode

All the PCA modules can be used as PWM outputs. The output frequency depends on the source for the PCA timer. All the modules will have the same output frequency because they all share the PCA timer. The duty cycle of each module is independently variable using the module's capture register CCAPLn. When the value of the PCA CL SFR is less than the value in the module's CCAPLn SFR the output will be low, when it is equal to or greater than it, the output will be high. When CL overflows from FF to 00, CCAPLn is reloaded with the value in CCAPHn. the allows the PWM to be updated without glitches. The PWM and ECOM bits in the module's CCAPMn register must be set to enable the PWM mode.

Figure 58. PCA PWM Mode

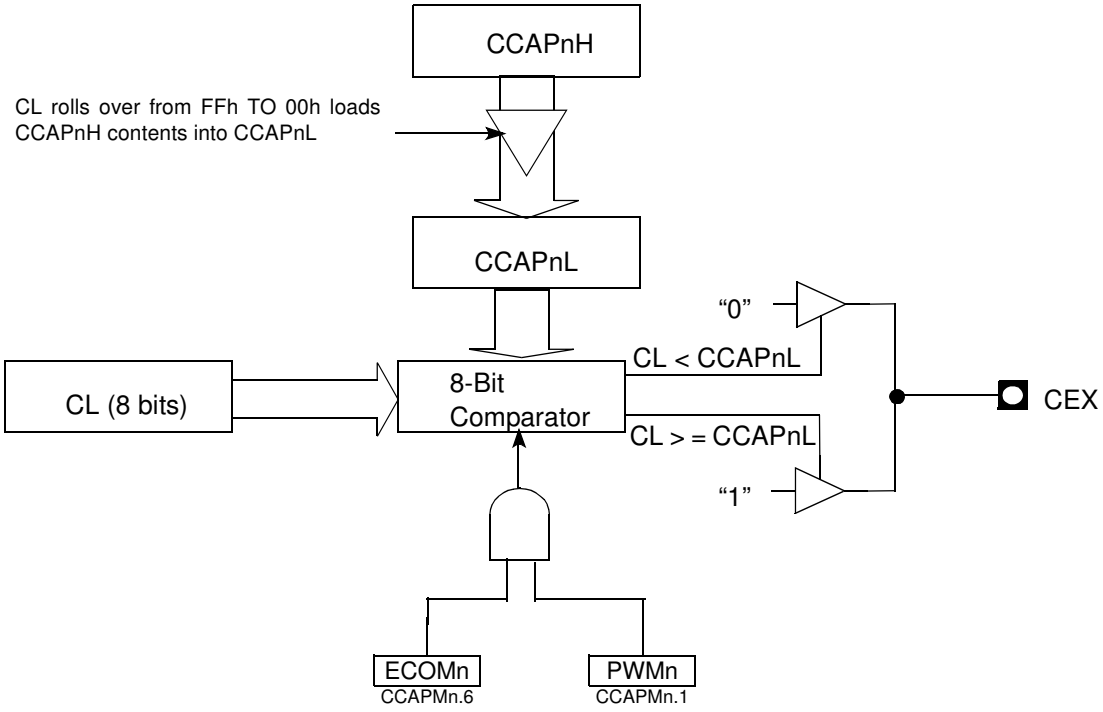

PCA Watchdog Timer

An on-board Watchdog timer is available with the PCA to improve system reliability without increasing chip count. Watchdog timers are useful for systems that are sensitive to noise, power glitches, or electrostatic discharge. Module 4 is the only PCA module that can be programmed as a Watchdog. However, this module can still be used for other modes if the Watchdog is not needed. The user pre-loads a 16-bit value in the compare registers. Just like the other compare modes, this 16-bit value is compared to the PCA timer value. If a match is allowed to occur, an internal reset will be generated. This will not cause the RST pin to be driven high.

To hold off the reset, the user has three options:

- periodically change the compare value so it will never match the PCA timer,
- periodically change the PCA timer value so it will never match the compare values, or
- disable the Watchdog by clearing the WDTE bit before a match occurs and then re-enable it.

The first two options are more reliable because the Watchdog timer is never disabled as in the third option. If the program counter ever goes astray, a match will eventually occur and cause an internal reset. If other PCA modules are being used the second option not recommended either. Remember, the PCA timer is the time base for all modules; changing the time base for other modules would not be a good idea. Thus, in most applications the first solution is the best option.

PCA Registers

Table 100. CMOD Register

CMOD (S:D9h)
PCA Counter Mode Register

7	6	5	4	3	2	1	0
CIDL	WDTE	-	-	-	CPS1	CPS0	ECF

Bit Number	Bit Mnemonic	Description
7	CIDL	**PCA Counter Idle Control bit** Clear to let the PCA run during Idle mode. Set to stop the PCA when Idle mode is invoked.
6	WDTE	**Watchdog Timer Enable** Clear to disable Watchdog Timer function on PCA Module 4, Set to enable it.
5	-	**Reserved** The value read from this bit is indeterminate. Do not set this bit.
4	-	**Reserved** The value read from this bit is indeterminate. Do not set this bit.
3	-	**Reserved** The value read from this bit is indeterminate. Do not set this bit.
2-1	CPS1:0	**EWC Count Pulse Select bits** CPS1 CPS0 Clock source 0 0 Internal Clock, FPca/6 0 1 Internal Clock, FPca/2 1 0 Timer 0 overflow 1 1 External clock at ECI/P1.2 pin (Max. Rate = FPca/4)
0	ECF	**Enable PCA Counter Overflow Interrupt bit** Clear to disable CF bit in CCON register to generate an interrupt. Set to enable CF bit in CCON register to generate an interrupt.

Reset Value = 00XX X000b

Table 101. CCON Register

CCON (S:D8h)
PCA Counter Control Register

7	6	5	4	3	2	1	0
CF	**CR**	**-**	**CCF4**	**CCF3**	**CCF2**	**CCF1**	**CCF0**

Bit Number	Bit Mnemonic	Description
7	CF	**PCA Timer/Counter Overflow flag** Set by hardware when the PCA Timer/Counter rolls over. This generates a PCA interrupt request if the ECF bit in CMOD register is set. Must be cleared by software.
6	CR	**PCA Timer/Counter Run Control bit** Clear to turn the PCA Timer/Counter off. Set to turn the PCA Timer/Counter on.
5	-	**Reserved** The value read from this bit is indeterminate. Do not set this bit.
4	CCF4	**PCA Module 4 Compare/Capture flag** Set by hardware when a match or capture occurs. This generates a PCA interrupt request if the ECCF 4 bit in CCAPM 4 register is set. Must be cleared by software.
3	CCF3	**PCA Module 3 Compare/Capture flag** Set by hardware when a match or capture occurs. This generates a PCA interrupt request if the ECCF 3 bit in CCAPM 3 register is set. Must be cleared by software.
2	CCF2	**PCA Module 2 Compare/Capture flag** Set by hardware when a match or capture occurs. This generates a PCA interrupt request if the ECCF 2 bit in CCAPM 2 register is set. Must be cleared by software.
1	CCF1	**PCA Module 1 Compare/Capture flag** Set by hardware when a match or capture occurs. This generates a PCA interrupt request if the ECCF 1 bit in CCAPM 1 register is set. Must be cleared by software.
0	CCF0	**PCA Module 0 Compare/Capture flag** Set by hardware when a match or capture occurs. This generates a PCA interrupt request if the ECCF 0 bit in CCAPM 0 register is set. Must be cleared by software.

Reset Value = 00X0 0000b

Table 102. CCAPnH Registers

CCAP0H (S:FAh)
CCAP1H (S:FBh)
CCAP2H (S:FCh)
CCAP3H (S:FDh)
CCAP4H (S:FEh)
PCA High Byte Compare/Capture Module n Register (n=0..4)

7	6	5	4	3	2	1	0
CCAPnH 7	**CCAPnH 6**	**CCAPnH 5**	**CCAPnH 4**	**CCAPnH 3**	**CCAPnH 2**	**CCAPnH 1**	**CCAPnH 0**

Bit Number	Bit Mnemonic	Description
7:0	CCAPnH 7:0	High byte of EWC-PCA comparison or capture values

Reset Value = 0000 0000b

Table 103. CCAPnL Registers

CCAP0L (S:EAh)
CCAP1L (S:EBh)
CCAP2L (S:ECh)
CCAP3L (S:EDh)
CCAP4L (S:EEh)
PCA Low Byte Compare/Capture Module n Register (n=0..4)

7	6	5	4	3	2	1	0
CCAPnL 7	**CCAPnL 6**	**CCAPnL 5**	**CCAPnL 4**	**CCAPnL 3**	**CCAPnL 2**	**CCAPnL 1**	**CCAPnL 0**

Bit Number	Bit Mnemonic	Description
7:0	CCAPnL 7:0	Low byte of EWC-PCA comparison or capture values

Reset Value = 0000 0000b

Table 104. CCAPMn Registers

CCAPM0 (S:DAh)
CCAPM1 (S:DBh)
CCAPM2 (S:DCh)
CCAPM3 (S:DDh)
CCAPM4 (S:DEh)
PCA Compare/Capture Module n Mode registers (n=0..4)

7	6	5	4	3	2	1	0
-	ECOMn	CAPPn	CAPNn	MATn	TOGn	PWMn	ECCFn

Bit Number	Bit Mnemonic	Description
7	-	**Reserved** The Value read from this bit is indeterminate. Do not set this bit.
6	ECOMn	**Enable Compare Mode Module x bit** Clear to disable the Compare function. Set to enable the Compare function. The Compare function is used to implement the software Timer, the high-speed output, the Pulse Width Modulator (PWM) and the Watchdog Timer (WDT).
5	CAPPn	**Capture Mode (Positive) Module x bit** Clear to disable the Capture function triggered by a positive edge on CEXx pin. Set to enable the Capture function triggered by a positive edge on CEXx pin
4	CAPNn	**Capture Mode (Negative) Module x bit** Clear to disable the Capture function triggered by a negative edge on CEXx pin. Set to enable the Capture function triggered by a negative edge on CEXx pin.
3	MATn	**Match Module x bit** Set when a match of the PCA Counter with the Compare/Capture register sets CCFx bit in CCON register, flagging an interrupt.
2	TOGn	**Toggle Module x bit** The toggle mode is configured by setting ECOMx, MATx and TOGx bits. Set when a match of the PCA Counter with the Compare/Capture register toggles the CEXx pin.
1	PWMn	**Pulse Width Modulation Module x Mode bit** Set to configure the module x as an 8-bit Pulse Width Modulator with output waveform on CEXx pin.
0	ECCFn	**Enable CCFx Interrupt bit** Clear to disable CCFx bit in CCON register to generate an interrupt request. Set to enable CCFx bit in CCON register to generate an interrupt request.

Reset Value = X000 0000b

Table 105. CH Register

CH (S:F9h)
PCA Counter Register High Value

7	6	5	4	3	2	1	0
CH 7	CH 6	CH 5	CH 4	CH 3	CH 2	CH 1	CH 0

Bit Number	Bit Mnemonic	Description
7:0	CH 7:0	High byte of Timer/Counter

Reset Value = 0000 00000b

Table 106. CL Register

CL (S:E9h)
PCA counter Register Low Value

7	6	5	4	3	2	1	0
CL 7	CL 6	CL 5	CL 4	CL 3	CL 2	CL 1	CL 0

Bit Number	Bit Mnemonic	Description
7:0	CL0 7:0	Low byte of Timer/Counter

Reset Value = 0000 00000b

Analog-to-Digital Converter (ADC)

This section describes the on-chip 10 bit analog-to-digital converter of the T89C51CC01. Eight ADC channels are available for sampling of the external sources AN0 to AN7. An analog multiplexer allows the single ADC converter to select one from the 8 ADC channels as ADC input voltage (ADCIN). ADCIN is converted by the 10-bit cascaded potentiometric ADC.

Two modes of conversion are available:
- Standard conversion (8 bits).
- Precision conversion (10 bits).

For the precision conversion, set bit PSIDLE in ADCON register and start conversion. The device is in a pseudo-idle mode, the CPU does not run but the peripherals are always running. This mode allows digital noise to be as low as possible, to ensure high precision conversion.

For this mode it is necessary to work with end of conversion interrupt, which is the only way to wake the device up.

If another interrupt occurs during the precision conversion, it will be served only after this conversion is completed.

Features

- 8 channels with multiplexed inputs
- 10-bit cascaded potentiometric ADC
- Conversion time 16 micro-seconds (typ.)
- Zero Error (offset) ± 2 LSB max
- Positive External Reference Voltage Range (VAREF) 2.4 to 3.0 Volt (typ.)
- ADCIN Range 0 to 3Volt
- Integral non-linearity typical 1 LSB, max. 2 LSB
- Differential non-linearity typical 0.5 LSB, max. 1 LSB
- Conversion Complete Flag or Conversion Complete Interrupt
- Selectable ADC Clock

ADC Port 1 I/O Functions

Port 1 pins are general I/O that are shared with the ADC channels. The channel select bit in ADCF register define which ADC channel/port1 pin will be used as ADCIN. The remaining ADC channels/port1 pins can be used as general-purpose I/O or as the alternate function that is available.

A conversion launched on a channel which are not selected on ADCF register will not have any effect.

VAREF

VAREF should be connected to a low impedance point and must remain in the range specified in Table 122. If the ADC is not used, it is recommended to connect VAREF to VAGND.

Figure 59. ADC Description

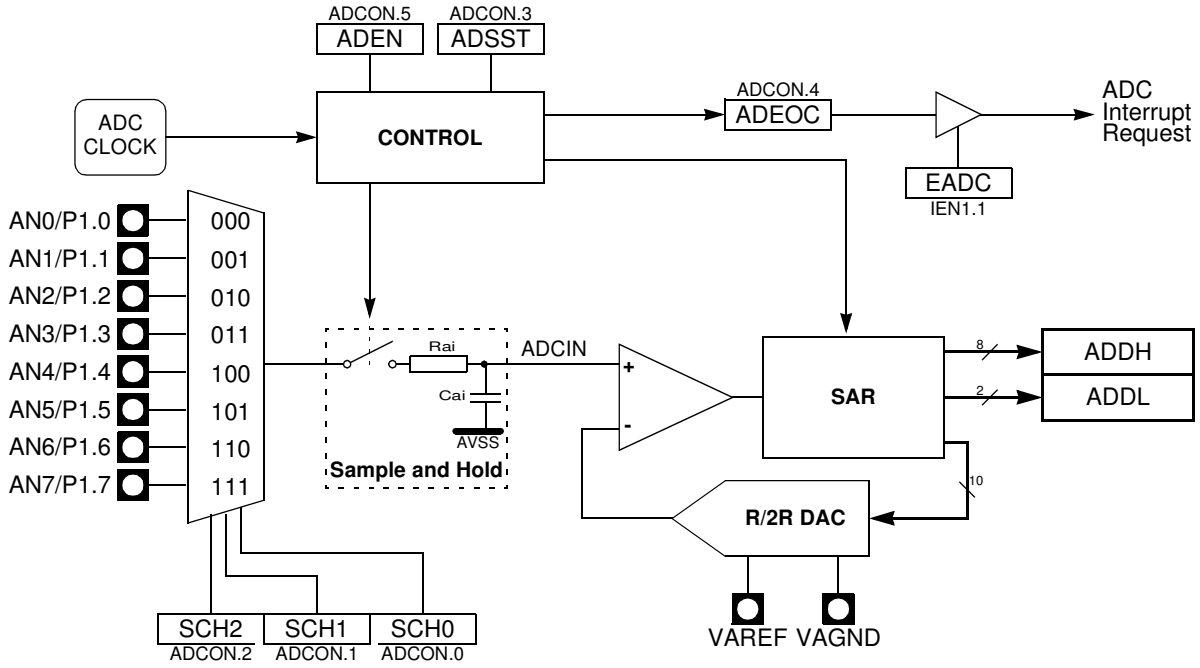

Figure 60 shows the timing diagram of a complete conversion. For simplicity, the figure depicts the waveforms in idealized form and do not provide precise timing information. For ADC characteristics and timing parameters refer to the Section “AC Characteristics” of the T89C51CC01 datasheet.

Figure 60. Timing Diagram

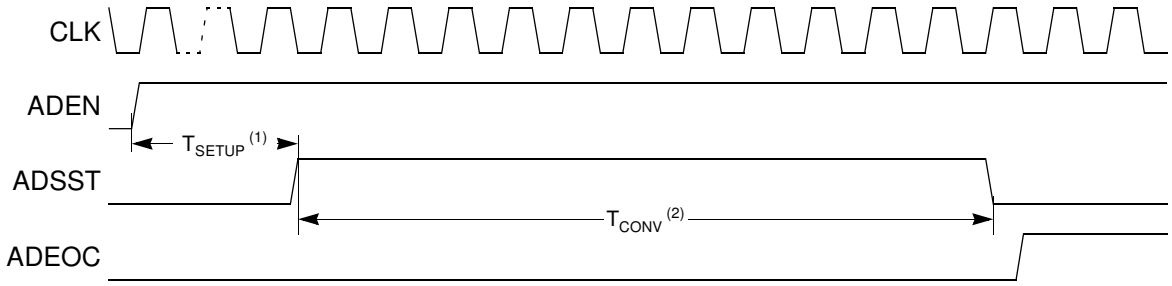

Notes: 1. Tsetup min, see the AC Parameter for A/D conversion.
2. Tconv = 11 clock ADC = 1sample and hold + 10 bit conversion
The user must ensure that Tsetup time between setting ADEN and the start of the first conversion.

ADC Converter Operation

A start of single A/D conversion is triggered by setting bit ADSST (ADCON.3).

After completion of the A/D conversion, the ADSST bit is cleared by hardware.

The end-of-conversion flag ADEOC (ADCON.4) is set when the value of conversion is available in ADDH and ADDL, it must be cleared by software. If the bit EADC (IEN1.1) is set, an interrupt occur when flag ADEOC is set (see Figure 62). Clear this flag for re-arming the interrupt.

The bits SCH0 to SCH2 in ADCON register are used for the analog input channel selection.(1)

Note: 1. Always leave Tsetup time before starting a conversion unless ADEN is permanently high. In this case one should wait Tsetup only before the first conversion.

Table 107. Selected Analog input

SCH2	SCH1	SCH0	Selected Analog input
0	0	0	AN0
0	0	1	AN1
0	1	0	AN2
0	1	1	AN3
1	0	0	AN4
1	0	1	AN5
1	1	0	AN6
1	1	1	AN7

Voltage Conversion

When the ADCIN is equals to VAREF the ADC converts the signal to 3FFh (full scale). If the input voltage equals VAGND, the ADC converts it to 000h. Input voltage between VAREF and VAGND are a straight-line linear conversion. All other voltages will result in 3FFh if greater than VAREF and 000h if less than VAGND.

Note: ADCIN should not exceed VAREF absolute maximum range (see “Absolute Maximum Ratings” on page 144)

Clock Selection

The ADC clock is the same as CPU.

The maximum clock frequency is defined in the DC parmeters for A/D converter. A prescaler is featured (ADCCLK) to generate the ADC clock from the oscillator frequency.

if PRS > 0 then $f_{ADC} = F_{periph} / 2 \times PRS$

if PRS = 0 then $f_{ADC} = F_{periph} / 64$

Figure 61. A/D Converter clock

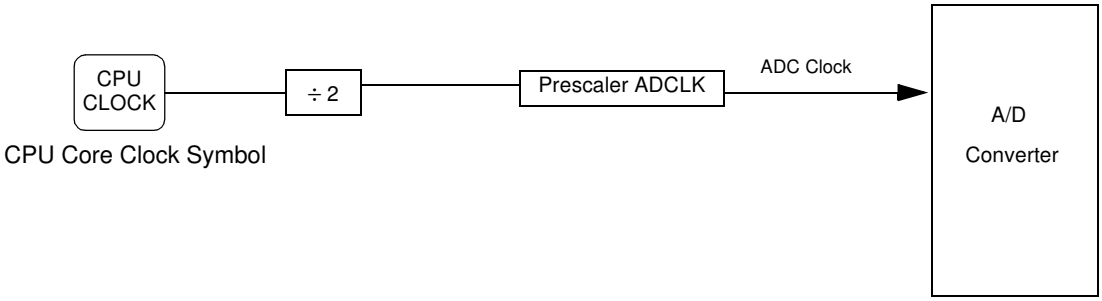

ADC Standby Mode

When the ADC is not used, it is possible to set it in standby mode by clearing bit ADEN in ADCON register. In this mode its power dissipation is reduced.

IT ADC Management

An interrupt end-of-conversion will occurs when the bit ADEOC is activated and the bit EADC is set. For re-arming the interrupt the bit ADEOC must be cleared by software.

Figure 62. ADC Interrupt Structure

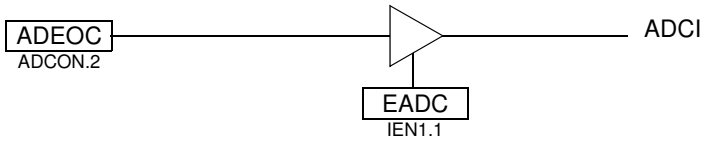

Routines examples

1. Configure P1.2 and P1.3 in ADC channels

```
// configure channel P1.2 and P1.3 for ADC
 ADCF = 0Ch

// Enable the ADC
 ADCON = 20h
```

2. Start a standard conversion

```
// The variable "channel" contains the channel to convert
// The variable "value_converted" is an unsigned int
// Clear the field SCH[2:0]
 ADCON and = F8h
// Select channel
 ADCON | = channel
// Start conversion in standard mode
 ADCON | = 08h
// Wait flag End of conversion
 while((ADCON and 01h)! = 01h)
// Clear the End of conversion flag
 ADCON and = EFh
// read the value
 value_converted = (ADDH << 2)+(ADDL)
```

3. Start a precision conversion (need interrupt ADC)

```
// The variable "channel" contains the channel to convert
// Enable ADC
 EADC = 1
```

```
// clear the field SCH[2:0]
 ADCON and = F8h
// Select the channel
 ADCON | = channel
// Start conversion in precision mode
 ADCON | = 48h
```

Note: to enable the ADC interrupt:
EA = 1

Registers

Table 108. ADCF Register

ADCF (S:F6h)
ADC Configuration

7	6	5	4	3	2	1	0
CH 7	CH 6	CH 5	CH 4	CH 3	CH 2	CH 1	CH 0

Bit Number	Bit Mnemonic	Description
7-0	CH 0:7	**Channel Configuration** Set to use P1.x as ADC input. Clear to use P1.x as standart I/O port.

Reset Value = 0000 0000b

Table 109. ADCON Register

ADCON (S:F3h)
ADC Control Register

7	6	5	4	3	2	1	0
-	PSIDLE	ADEN	ADEOC	ADSST	SCH2	SCH1	SCH0

Bit Number	Bit Mnemonic	Description
7	-	
6	PSIDLE	**Pseudo Idle Mode (Best Precision)** Set to put in idle mode during conversion Clear to convert without idle mode.
5	ADEN	**Enable/Standby Mode** Set to enable ADC Clear for Standby mode (power dissipation 1 uW).
4	ADEOC	**End Of Conversion** Set by hardware when ADC result is ready to be read. This flag can generate an interrupt. Must be cleared by software.
3	ADSST	**Start and Status** Set to start an A/D conversion. Cleared by hardware after completion of the conversion
2-0	SCH2:0	**Selection of Channel to Convert** see Table 107

Reset Value = X000 0000b

Table 110. ADCLK Register

ADCLK (S:F2h)
ADC Clock Prescaler

7	6	5	4	3	2	1	0
-	-	-	PRS 4	PRS 3	PRS 2	PRS 1	PRS 0

Bit Number	Bit Mnemonic	Description
7-5	-	**Reserved** The value read from these bits are indeterminate. Do not set these bits.
4-0	PRS4:0	**Clock Prescaler** f_{ADC} = fcpu clock/ (4 (or 2 in X2 mode)* PRS)

Reset Value = XXX0 0000b

Table 111. ADDH Register

ADDH (S:F5h Read Only)
ADC Data High Byte Register

7	6	5	4	3	2	1	0
ADAT 9	ADAT 8	ADAT 7	ADAT 6	ADAT 5	ADAT 4	ADAT 3	ADAT 2

Bit Number	Bit Mnemonic	Description
7-0	ADAT9:2	**ADC result** bits 9-2

Reset Value = 00h

Table 112. ADDL Register

ADDL (S:F4h Read Only)
ADC Data Low Byte Register

7	6	5	4	3	2	1	0
-	-	-	-	-	-	ADAT 1	ADAT 0

Bit Number	Bit Mnemonic	Description
7-2	-	**Reserved** The value read from these bits are indeterminate. Do not set these bits.
1-0	ADAT1:0	**ADC result** bits 1-0

Reset Value = 00h

Interrupt System

Introduction

The CAN Controller has a total of 10 interrupt vectors: two external interrupts ($\overline{INT0}$ and $\overline{INT1}$), three timer interrupts (timers 0, 1 and 2), a serial port interrupt, a PCA, a CAN interrupt, a timer overrun interrupt and an ADC. These interrupts are shown below.

Figure 63. Interrupt Control System

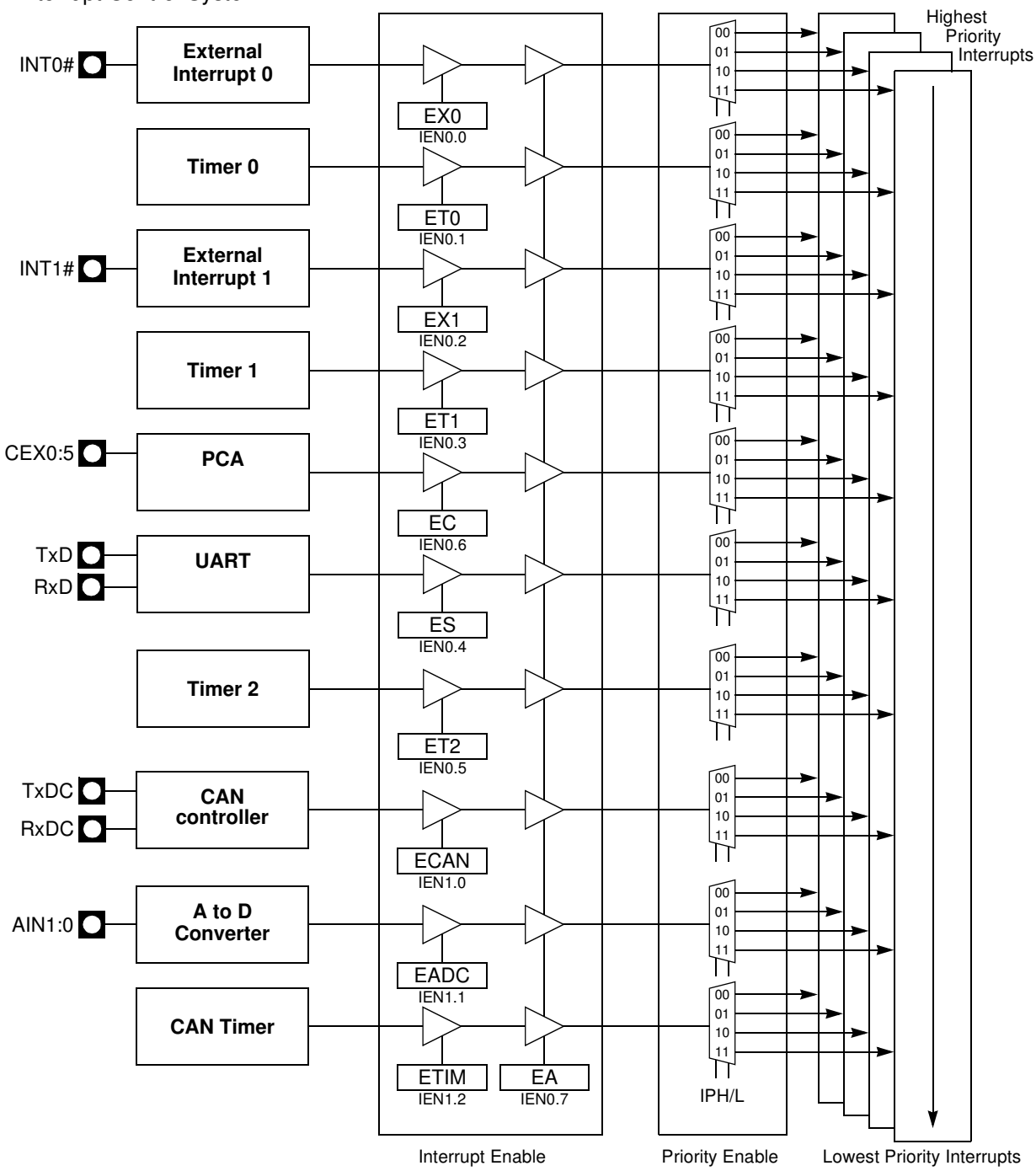

Each of the interrupt sources can be individually enabled or disabled by setting or clearing a bit in the Interrupt Enable register. This register also contains a global disable bit which must be cleared to disable all the interrupts at the same time.

Each interrupt source can also be individually programmed to one of four priority levels by setting or clearing a bit in the Interrupt Priority registers. The Table below shows the bit values and priority levels associated with each combination.

Table 113. Priority Level Bit Values

IPH.x	IPL.x	Interrupt Level Priority
0	0	0 (Lowest)
0	1	1
1	0	2
1	1	3 (Highest)

A low-priority interrupt can be interrupted by a high priority interrupt but not by another low-priority interrupt. A high-priority interrupt cannot be interrupted by any other interrupt source.

If two interrupt requests of different priority levels are received simultaneously, the request of the higher priority level is serviced. If interrupt requests of the same priority level are received simultaneously, an internal polling sequence determines which request is serviced. Thus within each priority level there is a second priority structure determined by the polling sequence, see Table 114.

Table 114. Interrupt Priority Within level

Interrupt Name	Interrupt Address Vector	Interrupt Number	Polling Priority
external interrupt (INT0)	0003h	1	1
Timer 0 (TF0)	000Bh	2	2
external interrupt (INT1)	0013h	3	3
Timer 1 (TF1)	001Bh	4	4
PCA (CF or CCFn)	0033h	7	5
UART (RI or TI)	0023h	5	6
Timer 2 (TF2)	002Bh	6	7
CAN (Txok, Rxok, Err or OvrBuf)	003Bh	8	8
ADC (ADCI)	0043h	9	9
CAN Timer Overflow (OVRTIM)	004Bh	10	10

Registers

Table 115. IEN0 Register

IEN0 (S:A8h)
Interrupt Enable Register

7	6	5	4	3	2	1	0
EA	**EC**	**ET2**	**ES**	**ET1**	**EX1**	**ET0**	**EX0**

Bit Number	Bit Mnemonic	Description
7	EA	**Enable All Interrupt bit** Clear to disable all interrupts. Set to enable all interrupts. If EA=1, each interrupt source is individually enabled or disabled by setting or clearing its interrupt enable bit.
6	EC	**PCA Interrupt Enable** Clear to disable the PCA interrupt. Set to enable the PCA interrupt.
5	ET2	**Timer 2 Overflow Interrupt Enable bit** Clear to disable Timer 2 overflow interrupt. Set to enable Timer 2 overflow interrupt.
4	ES	**Serial Port Enable bit** Clear to disable serial port interrupt. Set to enable serial port interrupt.
3	ET1	**Timer 1 Overflow Interrupt Enable bit** Clear to disable timer 1 overflow interrupt. Set to enable timer 1 overflow interrupt.
2	EX1	**External Interrupt 1 Enable bit** Clear to disable external interrupt 1. Set to enable external interrupt 1.
1	ET0	**Timer 0 Overflow Interrupt Enable bit** Clear to disable timer 0 overflow interrupt. Set to enable timer 0 overflow interrupt.
0	EX0	**External Interrupt 0 Enable bit** Clear to disable external interrupt 0. Set to enable external interrupt 0.

Reset Value = 0000 0000b
bit addressable

Table 116. IEN1 Register

IEN1 (S:E8h)
Interrupt Enable Register

7	6	5	4	3	2	1	0
-	-	-	-	-	ETIM	EADC	ECAN

Bit Number	Bit Mnemonic	Description
7	-	**Reserved** The value read from this bit is indeterminate. Do not set this bit.
6	-	**Reserved** The value read from this bit is indeterminate. Do not set this bit.
5	-	**Reserved** The value read from this bit is indeterminate. Do not set this bit.
4	-	**Reserved** The value read from this bit is indeterminate. Do not set this bit.
3	-	**Reserved** The value read from this bit is indeterminate. Do not set this bit.
2	ETIM	**TImer Overrun Interrupt Enable bit** Clear to disable the timer overrun interrupt. Set to enable the timer overrun interrupt.
1	EADC	**ADC Interrupt Enable bit** Clear to disable the ADC interrupt. Set to enable the ADC interrupt.
0	ECAN	**CAN Interrupt Enable bit** Clear to disable the CAN interrupt. Set to enable the CAN interrupt.

Reset Value = xxxx x000b
bit addressable

Table 117. IPL0 Register

IPL0 (S:B8h)
Interrupt Enable Register

7	6	5	4	3	2	1	0
-	PPC	PT2	PS	PT1	PX1	PT0	PX0

Bit Number	Bit Mnemonic	Description
7	-	**Reserved** The value read from this bit is indeterminate. Do not set this bit.
6	PPC	**PCA Interrupt Priority bit** Refer to PPCH for priority level
5	PT2	**Timer 2 Overflow Interrupt Priority bit** Refer to PT2H for priority level.
4	PS	**Serial Port Priority bit** Refer to PSH for priority level.
3	PT1	**Timer 1 Overflow Interrupt Priority bit** Refer to PT1H for priority level.
2	PX1	**External Interrupt 1 Priority bit** Refer to PX1H for priority level.
1	PT0	**Timer 0 Overflow Interrupt Priority bit** Refer to PT0H for priority level.
0	PX0	**External Interrupt 0 Priority bit** Refer to PX0H for priority level.

Reset Value = X000 0000b
bit addressable

Table 118. IPL1 Register

IPL1 (S:F8h)
Interrupt Priority Low Register 1

7	6	5	4	3	2	1	0
-	-	-	-		POVRL	PADCL	PCANL

Bit Number	Bit Mnemonic	Description
7	-	**Reserved** The value read from this bit is indeterminate. Do not set this bit.
6	-	**Reserved** The value read from this bit is indeterminate. Do not set this bit.
5	-	**Reserved** The value read from this bit is indeterminate. Do not set this bit.
4	-	**Reserved** The value read from this bit is indeterminate. Do not set this bit.
3	-	**Reserved** The value read from this bit is indeterminate. Do not set this bit.
2	POVRL	**Timer Overrun Interrupt Priority Level Less Significant Bit** Refer to PI2CH for priority level.
1	PADCL	**ADC Interrupt Priority Level Less Significant Bit** Refer to PSPIH for priority level.
0	PCANL	**CAN Interrupt Priority Level Less Significant Bit** Refer to PKBH for priority level.

Reset Value = XXXX X000b
bit addressable

Table 119. IPH0 Register

IPH0 (B7h)
Interrupt High Priority Register

7	6	5	4	3	2	1	0
-	PPCH	PT2H	PSH	PT1H	PX1H	PT0H	PX0H

Bit Number	Bit Mnemonic	Description
7	-	**Reserved** The value read from this bit is indeterminate. Do not set this bit.
6	PPCH	**PCA Interrupt Priority Level Most Significant bit** PPCH PPC Priority level 0 0 Lowest 0 1 1 0 1 1 Highest priority
5	PT2H	**Timer 2 Overflow Interrupt High Priority bit** PT2H PT2 Priority Level 0 0 Lowest 0 1 1 0 1 1 Highest
4	PSH	**Serial Port High Priority bit** PSH PS Priority Level 0 0 Lowest 0 1 1 0 1 1 Highest
3	PT1H	**Timer 1 Overflow Interrupt High Priority bit** PT1H PT1 Priority Level 0 0 Lowest 0 1 1 0 1 1 Highest
2	PX1H	**External Interrupt 1 High Priority bit** PX1H PX1 Priority Level 0 0 Lowest 0 1 1 0 1 1 Highest
1	PT0H	**Timer 0 Overflow Interrupt High Priority bit** PT0H PT0 Priority Level 0 0 Lowest 0 1 1 0 1 1 Highest
0	PX0H	**External Interrupt 0 high priority bit** PX0H PX0 Priority Level 0 0 Lowest 0 1 1 0 1 1 Highest

Reset Value = X000 0000b

Table 120. IPH1 Register

IPH1 (S:F7h)
Interrupt High Priority Register 1

7	6	5	4	3	2	1	0
-	-	-	-		POVRH	PADCH	PCANH

Bit Number	Bit Mnemonic	Description
7	-	**Reserved** The value read from this bit is indeterminate. Do not set this bit.
6	-	**Reserved** The value read from this bit is indeterminate. Do not set this bit.
5	-	**Reserved** The value read from this bit is indeterminate. Do not set this bit.
4	-	**Reserved** The value read from this bit is indeterminate. Do not set this bit.
3	-	**Reserved** The value read from this bit is indeterminate. Do not set this bit.
2	POVRH	**Timer overrun Interrupt Priority Level Most Significant bit** POVRH POVRL Priority level 0 0 Lowest 0 1 1 0 1 1 Highest
1	PADCH	**ADC Interrupt Priority Level Most Significant bit** PADCH PADCL Priority level 0 0 Lowest 0 1 1 0 1 1 Highest
0	PCANH	**CAN Interrupt Priority Level Most Significant bit** PCANH PCANLPriority level 0 0 Lowest 0 1 1 0 1 1 Highest

Reset Value = XXXX X000b

Electrical Characteristics

Absolute Maximum Ratings

Ambiant Temperature Under Bias:

I = industrial ..... -40°C to 85°C

Storage Temperature ..... -65°C to + 150°C

Voltage on V_{CC} from V_{SS} .....-0.5V to + 6V

Voltage on Any Pin from V_{SS}..... -0.5V to V_{CC} + 0.2 V

Power Dissipation ..... 1 W

*NOTICE: Stresses at or above those listed under "Absolute Maximum Ratings" may cause permanent damage to the device. This is a stress rating only and functional operation of the device at these or any other conditions above those indicated in the operational sections of this specification is not implied. Exposure to absolute maximum rating conditions may affect device reliability. The power dissipation is based on the maximum allowable die temperature and the thermal resistance of the package.

DC Parameters for Standard Voltage

T_A = -40°C to +85°C; V_{SS} = 0V; V_{CC} = 3V to 5.5V; F = 0 to 40 MHz

Table 121. DC Parameters in Standard Voltage

Symbol	Parameter	Min	Typ(5)	Max	Unit	Test Conditions
V_{IL}	Input Low Voltage	-0.5		0.2Vcc - 0.1	V	
V_{IH}	Input High Voltage except XTAL1, RST	0.2 V_{CC} + 0.9		V_{CC} + 0.5	V	
V_{IH1}(8)	Input High Voltage, XTAL1, RST	0.7 V_{CC}		V_{CC} + 0.5	V	
V_{OL}	Output Low Voltage, ports 1, 2, 3 and 4(6)			0.3 0.45 1.0	V V V	I_{OL} = 100 µA(4) I_{OL} = 1.6 mA(4) I_{OL} = 3.5 mA(4)
V_{OL1}	Output Low Voltage, port 0, ALE, $\overline{PSEN}$ (6)			0.3 0.45 1.0	V V V	I_{OL} = 200 µA(4) I_{OL} = 3.2 mA(4) I_{OL} = 7.0 mA(4)
V_{OH}	Output High Voltage, ports 1, 2, 3, 4 and 5	V_{CC} - 0.3 V_{CC} - 0.7 V_{CC} - 1.5			V V V	I_{OH} = -10 µA I_{OH} = -30 µA I_{OH} = -60 µA
V_{OH1}	Output High Voltage, port 0, ALE, $\overline{PSEN}$	V_{CC} - 0.3 V_{CC} - 0.7 V_{CC} - 1.5			V V V	I_{OH} = -200 µA I_{OH} = -3.2 mA I_{OH} = -7.0 mA
R_{RST}	RST Pulldown Resistor	15	40	200	kΩ	
I_{IL}	Logical 0 Input Current ports 1, 2, 3 and 4			-50	µA	Vin = 0.45V
I_{LI}	Input Leakage Current			±10	µA	0.45V < Vin < V_{CC}
I_{TL}	Logical 1 to 0 Transition Current, ports 1, 2, 3 and 4			-650	µA	Vin = 2.0V
C_{IO}	Capacitance of I/O Buffer			10	pF	Fc = 1 MHz T_A = 25°C
I_{PD}	Power-down Current		160	400	µA	3V < V_{CC} < 5.5V(3)
I_{CC}	Power Supply Current	I_{CCOP} = 0.7 Freq (MHz) + 3 mA ICC_FLASH_WRITE(7) =0.4 Freq (MHz) + 20 ma I_{CCIDLE} = 0.6 Freq (MHz) + 2 mA				3V < V_{CC} < 5.5V(1)(2)

Notes:
1. Operating I_{CC} is measured with all output pins disconnected; XTAL1 driven with T_{CLCH}, T_{CHCL} = 5 ns (see Figure 67.), $V_{IL} = V_{SS} + 0.5V$, $V_{IH} = V_{CC} - 0.5V$; XTAL2 N.C.; $\overline{EA}$ = RST = Port 0 = V_{CC}. I_{CC} would be slightly higher if a crystal oscillator used (see Figure 64.).
2. Idle I_{CC} is measured with all output pins disconnected; XTAL1 driven with T_{CLCH}, T_{CHCL} = 5 ns, $V_{IL} = V_{SS} + 0.5V$, $V_{IH} = V_{CC} - 0.5V$; XTAL2 N.C; Port 0 = V_{CC}; $\overline{EA}$ = RST = V_{SS} (see Figure 65.).
3. Power-down I_{CC} is measured with all output pins disconnected; $\overline{EA} = V_{CC}$, PORT 0 = V_{CC}; XTAL2 NC.; RST = V_{SS} (see Figure 66.). In addition, the WDT must be inactive and the POF flag must be set.
4. Capacitance loading on Ports 0 and 2 may cause spurious noise pulses to be superimposed on the V_{OL}s of ALE and Ports 1 and 3. The noise is due to external bus capacitance discharging into the Port 0 and Port 2 pins when these pins make 1 to 0 transitions during bus operation. In the worst cases (capacitive loading 100pF), the noise pulse on the ALE line may exceed 0.45V with maxi V_{OL} peak 0.6V. A Schmitt Trigger use is not necessary.
5. Typicals are based on a limited number of samples and are not guaranteed. The values listed are at room temperature.
6. Under steady state (non-transient) conditions, I_{OL} must be externally limited as follows:
   Maximum I_{OL} per port pin: 10 mA
   Maximum I_{OL} per 8-bit port:
   Port 0: 26 mA
   Ports 1, 2 and 3: 15 mA
   Maximum total I_{OL} for all output pins: 71 mA
   If I_{OL} exceeds the test condition, V_{OL} may exceed the related specification. Pins are not guaranteed to sink current greater than the listed test conditions.
7. ICC_FLASH_WRITE operating current while a Flash block write is on going.
8. Flash Retention is guaranteed with the same formula for V_{CC} Min down to 0.

Figure 64. I_{CC} Test Condition, Active Mode

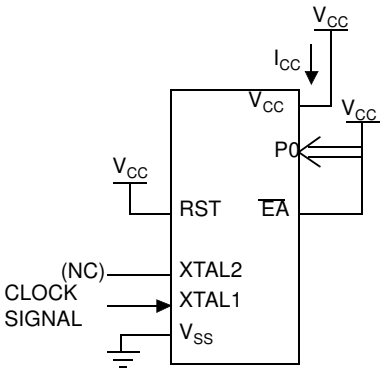

All other pins are disconnected.

Figure 65. I_{CC} Test Condition, Idle Mode

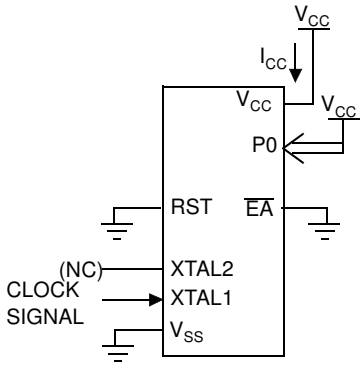

All other pins are disconnected.

Figure 66. I_{CC} Test Condition, Power-Down Mode

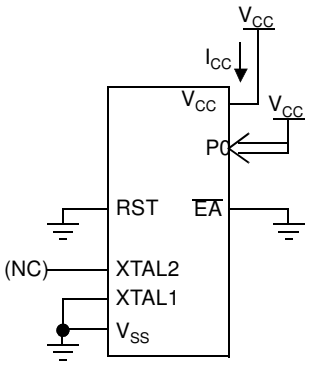

All other pins are disconnected.

Figure 67. Clock Signal Waveform for I_{CC} Tests in Active and Idle Modes

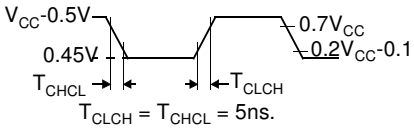

DC Parameters for A/D Converter

Table 122. DC Parameters for AD Converter in Precision Conversion

Symbol	Parameter	Min	Typ(1)	Max	Unit	Test Conditions
AVin	Analog input voltage	Vss- 0.2		Vref + 0.2	V	
Rref(2)	Resistance between Vref and Vss	12	16	24	kΩ	
Varef	Reference voltage	2.40		3.00	V	
Cai	Analog input Capacitance		60		pF	During sampling
Rai	Analog input Resistor			400	Ω	During sampling
INL	Integral non linearity		1	2	lsb	
DNL	Differential non linearity		0.5	1	lsb	
OE	Offset error	-2		2	lsb	

Notes: 1. Typicals are based on a limited number of samples and are not guaranteed.
2. With ADC enabled.

AC Parameters

Explanation of the AC Symbols

Each timing symbol has 5 characters. The first character is always a “T” (stands for time). The other characters, depending on their positions, stand for the name of a signal or the logical status of that signal. The following is a list of all the characters and what they stand for.

Example: T_{AVLL} = Time for Address Valid to ALE Low.
T_{LLPL} = Time for ALE Low to $\overline{PSEN}$ Low.

T_A = -40°C to +85°C; V_{SS} = 0V; V_{CC} = 5V ±10%; F = 0 to 40 MHz.

T_A = -40°C to +85°C; V_{SS} = 0V; V_{CC} = 5V ± 10%.

(Load Capacitance for port 0, ALE and PSEN = 60 pF; Load Capacitance for all other outputs = 60 pF.)

Table 123, Table 126 and Table 129 give the description of each AC symbols.

Table 124, Table 128 and Table 130 give for each range the AC parameter.

Table 125, Table 128 and Table 131 give the frequency derating formula of the AC parameter for each speed range description. To calculate each AC symbols: Take the x value and use this value in the formula.

Example: T_{LLIV} and 20 MHz, Standard clock.
x = 30 ns
T = 50 ns
T_{CCIV} = 4T - x = 170 ns

External Program Memory Characteristics

Table 123. Symbol Description

Symbol	Parameter
T	Oscillator clock period
T_{LHLL}	ALE pulse width
T_{AVLL}	Address Valid to ALE
T_{LLAX}	Address Hold After ALE
T_{LLIV}	ALE to Valid Instruction In
T_{LLPL}	ALE to $\overline{PSEN}$
T_{PLPH}	$\overline{PSEN}$ Pulse Width
T_{PLIV}	$\overline{PSEN}$ to Valid Instruction In
T_{PXIX}	Input Instruction Hold After $\overline{PSEN}$
T_{PXIZ}	Input Instruction Float After $\overline{PSEN}$
T_{AVIV}	Address to Valid Instruction In
T_{PLAZ}	$\overline{PSEN}$ Low to Address Float

Table 124. AC Parameters for a Fix Clock (F = 40 MHz)

Symbol	Min	Max	Units
T	25		ns
T_{LHLL}	40		ns
T_{AVLL}	10		ns
T_{LLAX}	10		ns
T_{LLIV}		70	ns
T_{LLPL}	15		ns
T_{PLPH}	55		ns
T_{PLIV}		35	ns
T_{PXIX}	0		ns
T_{PXIZ}		18	ns
T_{AVIV}		85	ns
T_{PLAZ}		10	ns

Table 125. AC Parameters for a Variable Clock

Symbol	Type	Standard Clock	X2 Clock	X parameter	Units
T_{LHLL}	Min	2 T - x	T - x	10	ns
T_{AVLL}	Min	T - x	0.5 T - x	15	ns
T_{LLAX}	Min	T - x	0.5 T - x	15	ns
T_{LLIV}	Max	4 T - x	2 T - x	30	ns
T_{LLPL}	Min	T - x	0.5 T - x	10	ns
T_{PLPH}	Min	3 T - x	1.5 T - x	20	ns
T_{PLIV}	Max	3 T - x	1.5 T - x	40	ns
T_{PXIX}	Min	x	x	0	ns
T_{PXIZ}	Max	T - x	0.5 T - x	7	ns
T_{AVIV}	Max	5 T - x	2.5 T - x	40	ns
T_{PLAZ}	Max	x	x	10	ns

External Program Memory Read Cycle

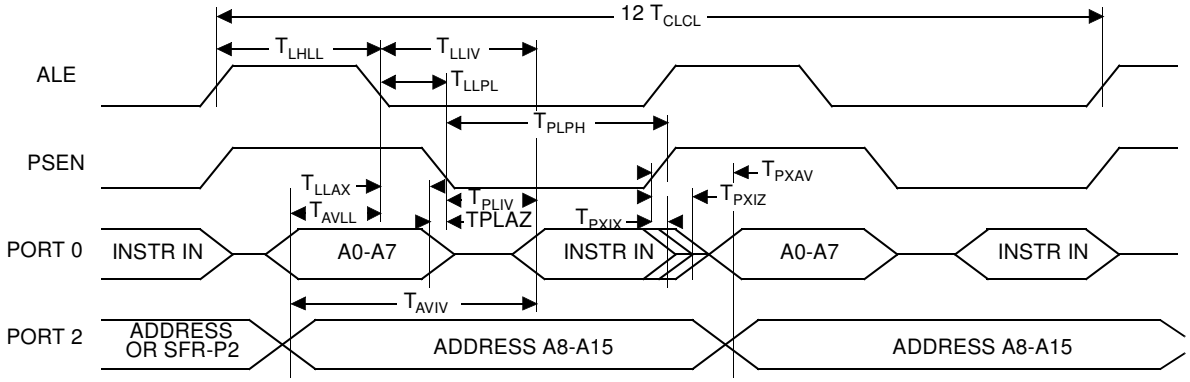

External Data Memory Characteristics

Table 126. Symbol Description

Symbol	Parameter
T_{RLRH}	$\overline{RD}$ Pulse Width
T_{WLWH}	$\overline{WR}$ Pulse Width
T_{RLDV}	$\overline{RD}$ to Valid Data In
T_{RHDX}	Data Hold After $\overline{RD}$
T_{RHDZ}	Data Float After $\overline{RD}$
T_{LLDV}	ALE to Valid Data In
T_{AVDV}	Address to Valid Data In
T_{LLWL}	ALE to $\overline{WR}$ or $\overline{RD}$
T_{AVWL}	Address to $\overline{WR}$ or $\overline{RD}$
T_{QVWX}	Data Valid to $\overline{WR}$ Transition
T_{QVWH}	Data set-up to $\overline{WR}$ High
T_{WHQX}	Data Hold After $\overline{WR}$
T_{RLAZ}	$\overline{RD}$ Low to Address Float
T_{WHLH}	$\overline{RD}$ or $\overline{WR}$ High to ALE high

Table 127. AC Parameters for a Variable Clock (F=40MHz)

Symbol	Min	Max	Units
T_{RLRH}	130		ns
T_{WLWH}	130		ns
T_{RLDV}		100	ns
T_{RHDX}	0		ns
T_{RHDZ}		30	ns
T_{LLDV}		160	ns
T_{AVDV}		165	ns
T_{LLWL}	50	100	ns
T_{AVWL}	75		ns
T_{QVWX}	10		ns
T_{QVWH}	160		ns
T_{WHQX}	15		ns
T_{RLAZ}		0	ns
T_{WHLH}	10	40	ns

Table 128. AC Parameters for a Variable Clock

Symbol	Type	Standard Clock	X2 Clock	X parameter	Units
T_{RLRH}	Min	6 T - x	3 T - x	20	ns
T_{WLWH}	Min	6 T - x	3 T - x	20	ns
T_{RLDV}	Max	5 T - x	2.5 T - x	25	ns
T_{RHDX}	Min	x	x	0	ns
T_{RHDZ}	Max	2 T - x	T - x	20	ns
T_{LLDV}	Max	8 T - x	4T -x	40	ns
T_{AVDV}	Max	9 T - x	4.5 T - x	60	ns
T_{LLWL}	Min	3 T - x	1.5 T - x	25	ns
T_{LLWL}	Max	3 T + x	1.5 T + x	25	ns
T_{AVWL}	Min	4 T - x	2 T - x	25	ns
T_{QVWX}	Min	T - x	0.5 T - x	15	ns
T_{QVWH}	Min	7 T - x	3.5 T - x	25	ns
T_{WHQX}	Min	T - x	0.5 T - x	10	ns
T_{RLAZ}	Max	x	x	0	ns
T_{WHLH}	Min	T - x	0.5 T - x	15	ns
T_{WHLH}	Max	T + x	0.5 T + x	15	ns

External Data Memory Write Cycle

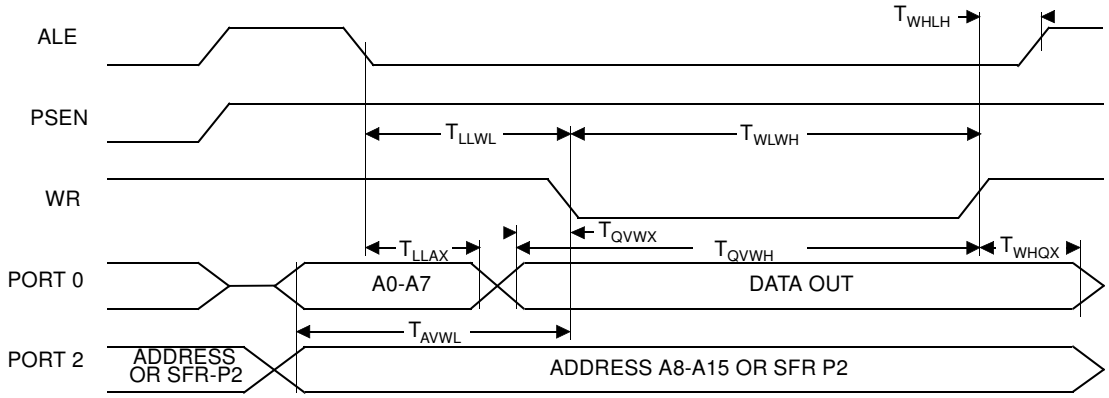

External Data Memory Read Cycle

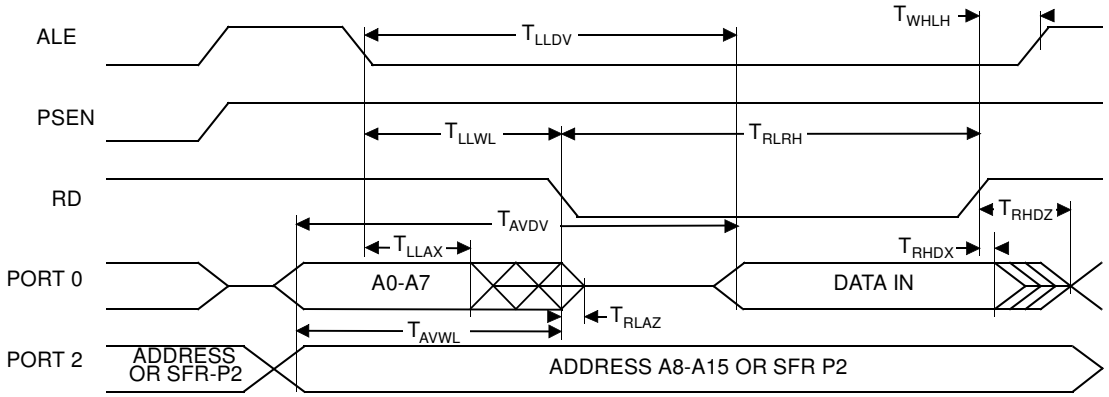

Serial Port Timing – Shift Register Mode

Table 129. Symbol Description (F = 40 MHz)

Symbol	Parameter
T_{XLXL}	Serial port clock cycle time
T_{QVHX}	Output data set-up to clock rising edge
T_{XHQX}	Output data hold after clock rising edge
T_{XHDX}	Input data hold after clock rising edge
T_{XHDV}	Clock rising edge to input data valid

Table 130. AC Parameters for a Fix Clock (F = 40 MHz)

Symbol	Min	Max	Units
T_{XLXL}	300		ns
T_{QVHX}	200		ns
T_{XHQX}	30		ns
T_{XHDX}	0		ns
T_{XHDV}		117	ns

Table 131. AC Parameters for a Variable Clock

Symbol	Type	Standard Clock	X2 Clock	X parameter for -M range	Units
T_{XLXL}	Min	12 T	6 T		ns
T_{QVHX}	Min	10 T - x	5 T - x	50	ns
T_{XHQX}	Min	2 T - x	T - x	20	ns
T_{XHDX}	Min	x	x	0	ns
T_{XHDV}	Max	10 T - x	5 T- x	133	ns

Shift Register Timing Waveforms

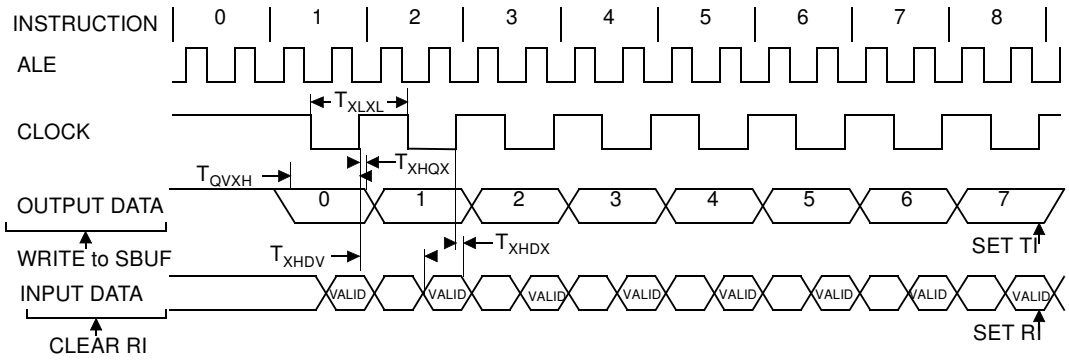

External Clock Drive Characteristics (XTAL1)

Table 132. AC Parameters

Symbol	Parameter	Min	Max	Units
T_{CLCL}	Oscillator Period	25		ns
T_{CHCX}	High Time	5		ns
T_{CLCX}	Low Time	5		ns
T_{CLCH}	Rise Time		5	ns
T_{CHCL}	Fall Time		5	ns
T_{CHCX}/T_{CLCX}	Cyclic ratio in X2 mode	40	60	%

External Clock Drive Waveforms

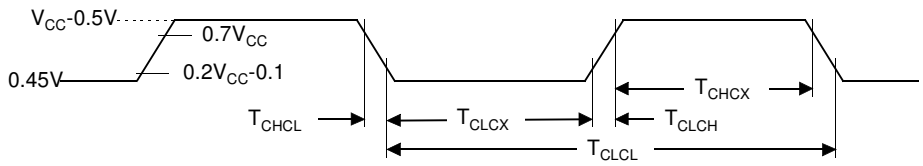

AC Testing Input/Output Waveforms

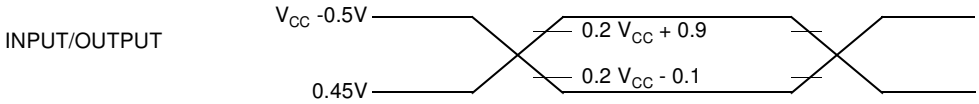

AC inputs during testing are driven at V_{CC} - 0.5 for a logic “1” and 0.45V for a logic “0”. Timing measurement are made at V_{IH} min for a logic “1” and V_{IL} max for a logic “0”.

Float Waveforms

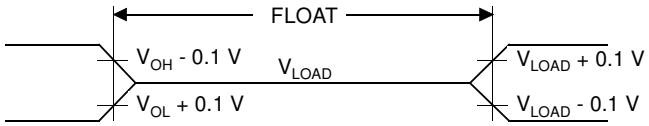

For timing purposes as port pin is no longer floating when a 100 mV change from load voltage occurs and begins to float when a 100 mV change from the loaded V_{OH}/V_{OL} level occurs. $I_{OL}/I_{OH} \geq \pm$ 20 mA.

Clock Waveforms Valid in normal clock mode. In X2 mode XTAL2 must be changed to XTAL2/2.

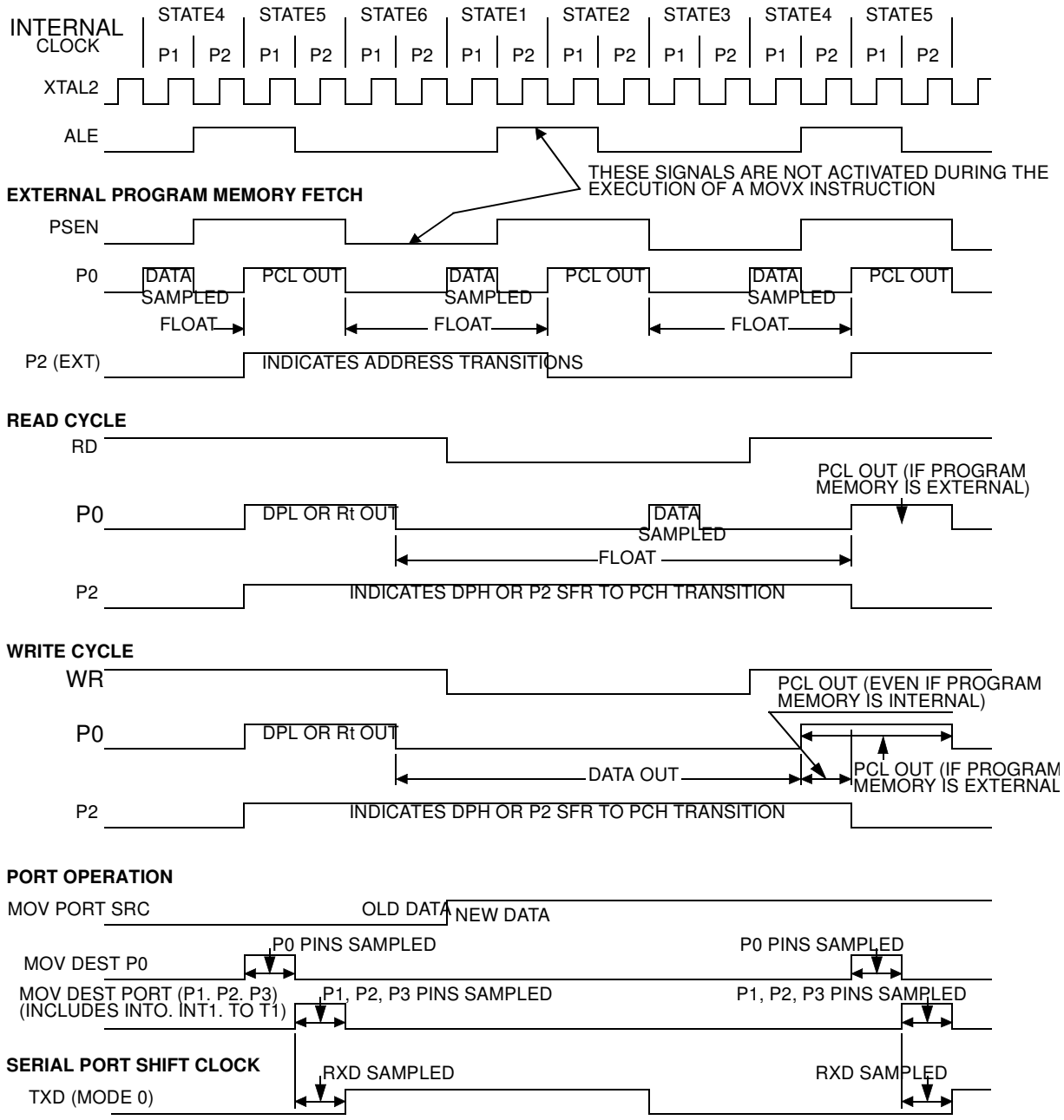

This diagram indicates when signals are clocked internally. The time it takes the signals to propagate to the pins, however, ranges from 25 to 125 ns. This propagation delay is dependent on variables such as temperature and pin loading. Propagation also varies from output to output and component. Typically though (T_A=25°C fully loaded) RD and WR propagation delays are approximately 50ns. The other signals are typically 85 ns. Propagation delays are incorporated in the AC specifications.

Flash/EEPROM Memory

Table 133. Timing Symbol Definitions

Signals	
S (Hardware condition)	PSEN#,EA
R	RST
B	FBUSY flag

Conditions	
L	Low
V	Valid
X	No Longer Valid

Table 134. Memory AC Timing

VDD = 3V to 5.5V, TA = -40 to +85°C

Symbol	Parameter	Min	Typ	Max	Unit
T_{SVRL}	Input PSEN# Valid to RST Edge	50			ns
T_{RLSX}	Input PSEN# Hold after RST Edge	50			ns
T_{BHBL}	Flash/EEPROM Internal Busy (Programming) Time (2.7 V)		14	21	ms
	Flash/EEPROM Internal Busy (Programming) Time (3.3 V)		10	15	ms
N_{FCY}	Number of Flash/EEPROM Erase/Write Cycles	100 000			cycles
T_{FDR}	Flash/EEPROM Data Retention Time	10			years

Figure 68. Flash Memory – ISP Waveforms

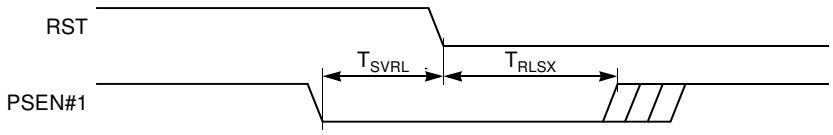

Figure 69. Flash Memory – Internal Busy Waveforms

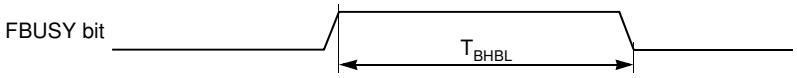

A/D Converter

Table 135. AC Parameters for A/D Conversion

Symbol	Parameter	Min	Typ	Max	Unit
T_{SETUP}		4			µs
ADC Clock Frequency			700		KHz

Ordering Information

Table 136. Possible Order Entries

Part Number	Boot Loader	Temperature Range	Package	Packing	Product Marking
T89C51CC01UA-7CTIM	OBSOLETE				
T89C51CC01UA-RLTIM					
T89C51CC01UA-SLSIM					
T89C51CC01CA-7CTIM					
T89C51CC01CA-RLTIM					
T89C51CC01CA-SLSIM					
AT89C51CC01UA-RLTUM	UART	Industrial & Green	VQFP44	Tray	89C51CC01UA-UM
AT89C51CC01UA-SLSUM	UART	Industrial & Green	PLCC44	Stick	89C51CC01UA-UM
AT89C51CC01CA-RLTUM	CAN	Industrial & Green	VQFP44	Tray	89C51CC01CA-UM
AT89C51CC01CA-SLSUM	CAN	Industrial & Green	PLCC44	Stick	89C51CC01CA-UM

- Factory default programming for T89C51CC01CA-xxxx is bootloader CAN and HSB=BBh
  - . X1 mode
  - . BLJB = 0; jump to Bootloader
  - . LB2 = 0 Security Level 4
- Factory default programming for T89C51CC01UA-xxxx is bootloader UART and HSB=BBh
  - . X1 mode
  - . BLJB = 0; jump to Bootloader
  - . LB2 = 0 Security Level 4

Note: Customer can change these modes by re-programming with a parallel programmer, this can be done by an Atmel distributor.

Package Drawings

VQFP44

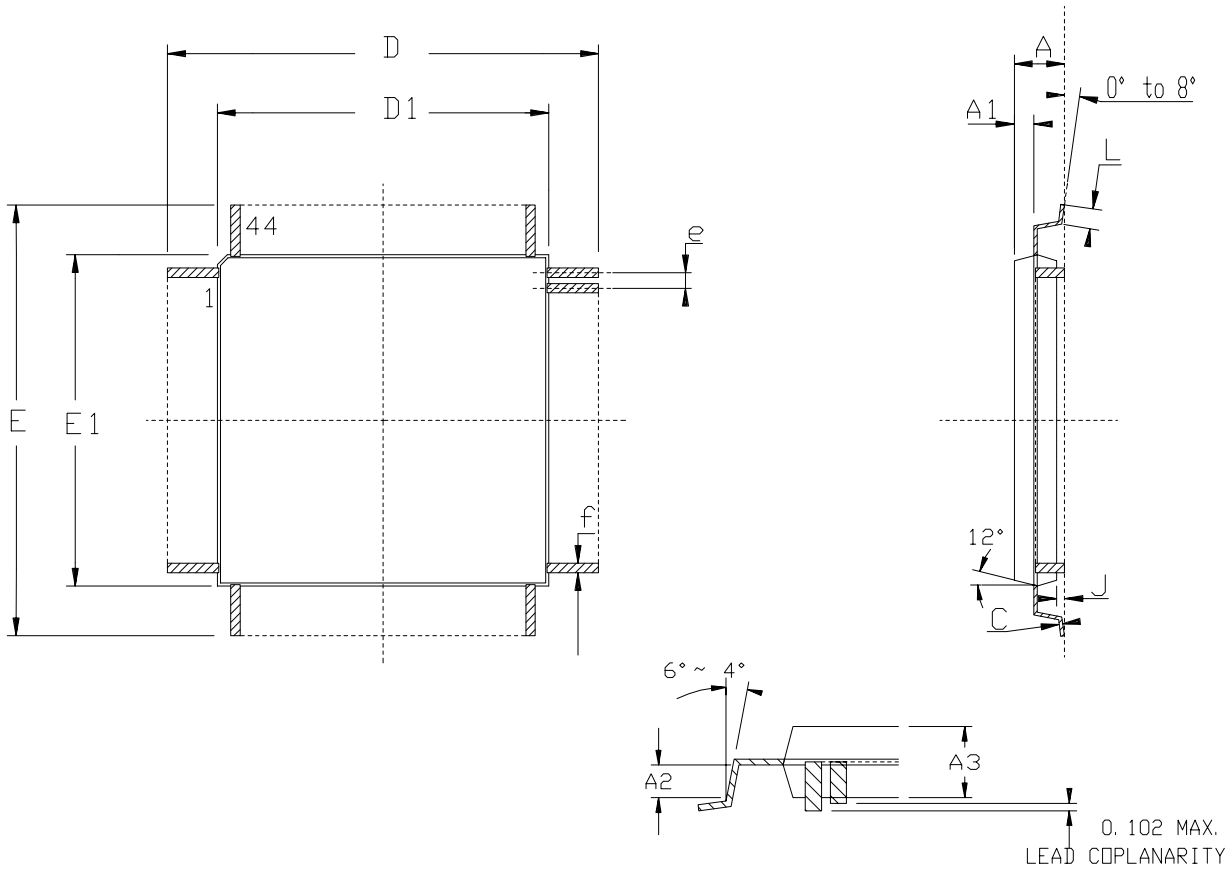

	MM		INCH	
	Min	Max	Min	Max
A	–	1.60	–	.063
A1	0.64 REF		.025 REF	
A2	0.64 REF		.025 REF	
A3	1.35	1.45	.053	.057
D	11.90	12.10	.468	.476
D1	9.90	10.10	.390	.398
E	11.90	12.10	.468	.476
E1	9.90	10.10	.390	.398
J	0.05	–	.002	–
L	0.45	0.75	.018	.030
e	0.80 BSC		.0315 BSC	
f	0.35 BSC		.014 BSC	

STANDARD NOTES FOR PQFP/ VQFP / TQFP / DQFP

1/ CONTROLLING DIMENSIONS : INCHES

2/ ALL DIMENSIONING AND TOLERANCING CONFORM TO ANSI Y 14.5M - 1982.

3/ "D1 AND E1" DIMENSIONS DO NOT INCLUDE MOLD PROTUSIONS. MOLD PROTUSIONS SHALL NOT EXCEED 0.25 mm (0.010 INCH). THE TOP PACKAGE BODY SIZE MAY BE SMALLER THAN THE BOTTOM PACKAGE BODY SIZE BY AS MUCH AS 0.15 mm.

4/ DATUM PLANE "H" LOCATED AT MOLD PARTING LINE AND COINCIDENT WITH LEAD, WHERE LEAD EXITS PLASTIC BODY AT BOTTOM OF PARTING LINE.

5/ DATUM "A" AND "D" TO BE DETERMINED AT DATUM PLANE H.

6/ DIMENSION " f " DOES NOT INCLUDE DAMBAR PROTUSION ALLOWABLE DAMBAR PROTUSION SHALL BE 0.08mm/.003" TOTAL IN EXCESS OF THE " f " DIMENSION AT MAXIMUM MATERIAL CONDITION . DAMBAR CANNOT BE LOCATED ON THE LOWER RADIUS OR THE FOOT.

PLCC44

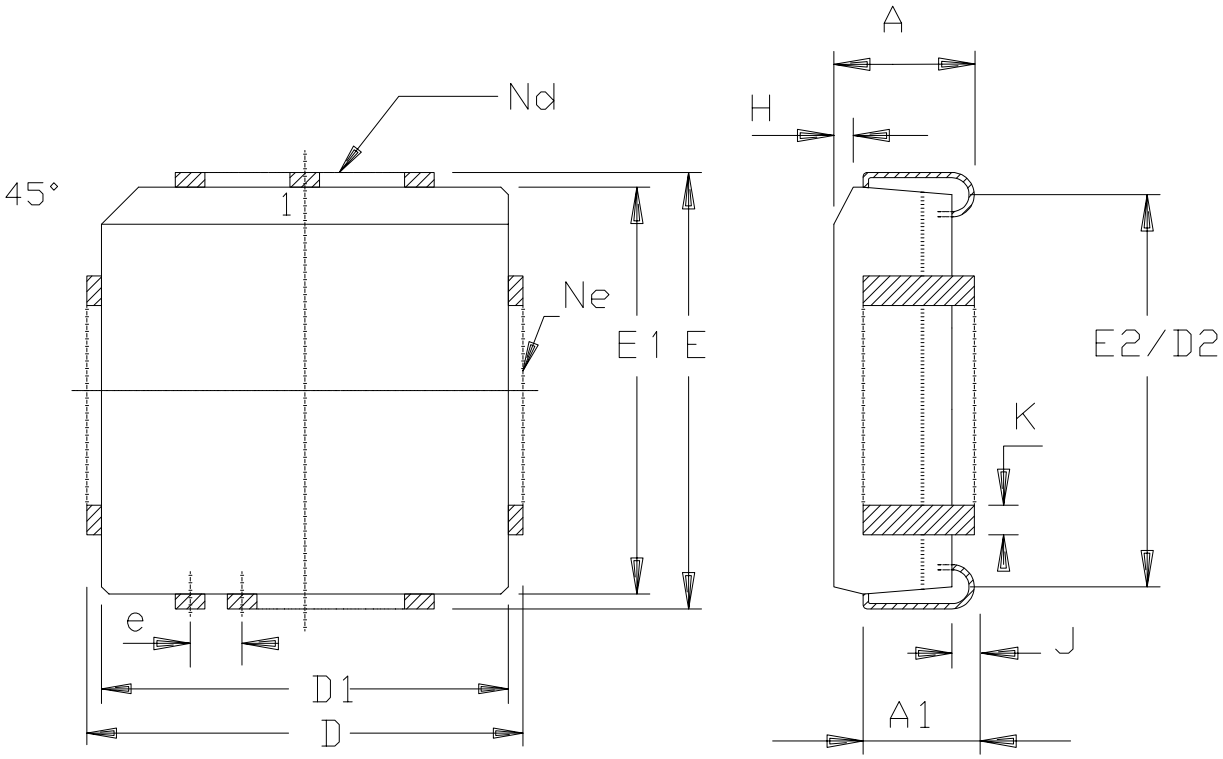

	MM		INCH	
A	4.20	4.57	.165	.180
A1	2.29	3.04	.090	.120
D	17.40	17.65	.685	.695
D1	16.44	16.66	.647	.656
D2	14.99	16.00	.590	.630
E	17.40	17.65	.685	.695
E1	16.44	16.66	.647	.656
E2	14.99	16.00	.590	.630
e	1.27	BSC	.050	BSC
H	1.07	1.42	.042	.056
J	0.51	-	.020	-
K	0.33	0.53	.013	.021
Nd	11		11	
Ne	11		11	
PKG STD	00			

STANDARD NOTES FOR PLCC

1/ CONTROLLING DIMENSIONS : INCHES

2/ DIMENSIONING AND TOLERANCING PER ANSI Y 14.5M - 1982.

3/ "D" AND "E1" DIMENSIONS DO NOT INCLUDE MOLD FLASH OR PROTUSIONS. MOLD FLASH OR PROTUSIONS SHALL NOT EXCEED 0.20 mm (.008 INCH) PER SIDE.

Datasheet Change Log for T89C51CC01

Changes from 4129F - 11/02 to 4129G - 04/03

1. Changed the endurance of Flash to 100, 000 Write/Erase cycles.
2. Added note on Flash retention formula for V_{IH1}, in Section "DC Parameters for Standard Voltage", page 144.

Changes from 4129G - 04/03 to 4129H - 10/03

1. Updated “Electrical Characteristics” on page 144.
2. Corrected Figure 46 on page 84.

Changes from 4129H - 10/03 to 4129I - 12/03

1. Correction in Registers CPA and CPS0.
2. Added note regarding PSEN during power On see Section “Hardware Boot Process”, page 48.

Changes from 4129I - 12/03 to 4129J - 08/04

1. Figure clock-out mode modified see, Figure 37 on page 67.
2. Added explanation on the CAN protocol, see Section “CAN Controller”, page 75.
3. Corrected error in Table 53 on page 72, (1.25ms to 1.25s) for Time-out Computation.

Changes from 4129J - 08/04 to 4129K 01/05

1. Minor corrections throughout the document.
2. Clarification to Mode Switching Waveforms diagram. See page 16.

Changes from 4129K 01/05 to 4129L 08/05

1. Added green product ordering information.

Changes from 4129L 08/05 to 4129M 02/08

1. Removed non-green packages from ordering information.

Changes from 4129M 02/08 to 4129N 03/08

1. Removed CA-BGA package offering from ordering information.
2. Updated package drawings.

Table of Contents

Features ***1***

Description ***2***

Block Diagram ***2***

Pin Configuration ***3***

I/O Configurations 4
Port 1, Port 3 and Port 4 4
Port 0 and Port 2 4
Read-Modify-Write Instructions 5
Quasi-Bidirectional Port Operation 6

SFR Mapping ***8***

Clock ***14***

Description 14
Register 17

Power Management ***18***

Reset Pin 18
At Power-up (Cold Reset) 18
Reset Recommendation to Prevent Flash Corruption 19
Idle Mode 19
Power-down Mode 20
Registers 22

Data Memory ***23***

Internal Space 24
External Space 25
Dual Data Pointer 27
Registers 28

EEPROM Data Memory ***30***

Write Data in the Column Latches 30
Programming 30
Read Data 30
Examples 31
Registers 32

Program/Code Memory ***33***
External Code Memory Access 34
Flash Memory Architecture 35
Overview of FM0 Operations 37
Registers 43

Operation Cross Memory Access ***44***

Sharing Instructions ***45***

In-System Programming (ISP) ***47***
Flash Programming and Erasure 47
Boot Process 48
Application Programming Interface 49
XROW Bytes 49
Hardware Security Byte 50

Serial I/O Port ***51***
Framing Error Detection 51
Automatic Address Recognition 52
Given Address 53
Broadcast Address 53
Registers 54

Timers/Counters ***57***
Timer/Counter Operations 57
Timer 0 57
Timer 1 60
Interrupt 60
Registers 62

Timer 2 ..... ***66***
Auto-Reload Mode 66
Programmable Clock-Output 67
Registers 68

Watchdog Timer ***71***
Watchdog Programming 72
Watchdog Timer During Power-down Mode and Idle 73

CAN Controller ***75***
CAN Protocol 75

CAN Controller Description 79
CAN Controller Mailbox and Registers Organization 80
CAN Controller Management 82
IT CAN Management 84
Bit Timing and Baud Rate 86
Fault Confinement 88
Acceptance Filter 89
Data and Remote Frame 90
Time Trigger Communication (TTC) and Message Stamping 91
CAN Autobaud and Listening Mode 92
Routines Examples 92
CAN SFR's 95
Registers 96

Programmable Counter Array (PCA) 118
PCA Timer 118
PCA Modules 119
PCA Interrupt 120
PCA Capture Mode 120
16-bit Software Timer Mode 121
High Speed Output Mode 122
Pulse Width Modulator Mode 122
PCA Watchdog Timer 123
PCA Registers 124

Analog-to-Digital Converter (ADC) 129
Features 129
ADC Port 1 I/O Functions 129
VAREF 129
ADC Converter Operation 131
Voltage Conversion 131
Clock Selection 131
ADC Standby Mode 132
IT ADC Management 132
Routines examples 132
Registers 134

Interrupt System 136
Introduction 136
Registers 138

Electrical Characteristics 144

Absolute Maximum Ratings 144
DC Parameters for Standard Voltage 144
DC Parameters for A/D Converter 147
AC Parameters 147

Ordering Information 157

Package Drawings 158
VQFP44 158
PLCC44 160

Datasheet Change Log for T89C51CC01 162
Changes from 4129F - 11/02 to 4129G - 04/03 162
Changes from 4129G - 04/03 to 4129H - 10/03 162
Changes from 4129H - 10/03 to 4129I - 12/03 162
Changes from 4129I - 12/03 to 4129J - 08/04 162
Changes from 4129J - 08/04 to 4129K 01/05 162
Changes from 4129K 01/05 to 4129L 08/05 162
Changes from 4129L 08/05 to 4129M 02/08 162
Changes from 4129M 02/08 to 4129N 03/08 162

Table of Contents i

Atmel Corporation

2325 Orchard Parkway
San Jose, CA 95131, USA
Tel: 1(408) 441-0311
Fax: 1(408) 487-2600

Regional Headquarters

Europe
Atmel Sarl
Route des Arsenaux 41
Case Postale 80
CH-1705 Fribourg
Switzerland
Tel: (41) 26-426-5555
Fax: (41) 26-426-5500

Asia
Room 1219
Chinachem Golden Plaza
77 Mody Road Tsimshatsui
East Kowloon
Hong Kong
Tel: (852) 2721-9778
Fax: (852) 2722-1369

Japan
9F, Tonetsu Shinkawa Bldg.
1-24-8 Shinkawa
Chuo-ku, Tokyo 104-0033
Japan
Tel: (81) 3-3523-3551
Fax: (81) 3-3523-7581

Atmel Operations

Memory
2325 Orchard Parkway
San Jose, CA 95131, USA
Tel: 1(408) 441-0311
Fax: 1(408) 436-4314

Microcontrollers
2325 Orchard Parkway
San Jose, CA 95131, USA
Tel: 1(408) 441-0311
Fax: 1(408) 436-4314

La Chantrerie
BP 70602
44306 Nantes Cedex 3, France
Tel: (33) 2-40-18-18-18
Fax: (33) 2-40-18-19-60

ASIC/ASSP/Smart Cards
Zone Industrielle
13106 Rousset Cedex, France
Tel: (33) 4-42-53-60-00
Fax: (33) 4-42-53-60-01

1150 East Cheyenne Mtn. Blvd.
Colorado Springs, CO 80906, USA
Tel: 1(719) 576-3300
Fax: 1(719) 540-1759

Scottish Enterprise Technology Park
Maxwell Building
East Kilbride G75 0QR, Scotland
Tel: (44) 1355-803-000
Fax: (44) 1355-242-743

RF/Automotive
Theresienstrasse 2
Postfach 3535
74025 Heilbronn, Germany
Tel: (49) 71-31-67-0
Fax: (49) 71-31-67-2340

1150 East Cheyenne Mtn. Blvd.
Colorado Springs, CO 80906, USA
Tel: 1(719) 576-3300
Fax: 1(719) 540-1759

Biometrics/Imaging/Hi-Rel MPU/
High Speed Converters/RF Datacom
Avenue de Rochepleine
BP 123
38521 Saint-Egreve Cedex, France
Tel: (33) 4-76-58-30-00
Fax: (33) 4-76-58-34-80

Literature Requests
www.atmel.com/literature

Disclaimer: Atmel Corporation makes no warranty for the use of its products, other than those expressly contained in the Company's standard warranty which is detailed in Atmel's Terms and Conditions located on the Company's web site. The Company assumes no responsibility for any errors which may appear in this document, reserves the right to change devices or specifications detailed herein at any time without notice, and does not make any commitment to update the information contained herein. No licenses to patents or other intellectual property of Atmel are granted by the Company in connection with the sale of Atmel products, expressly or by implication. Atmel's products are not authorized for use as critical components in life support devices or systems.

© Atmel Corporation 2008. **All rights reserved.** Atmel® and combinations thereof are the registered trademarks of Atmel Corporation or its subsidiaries. Other terms and product names may be the trademarks of others.

Printed on recycled paper.

4129N–CAN–03/08