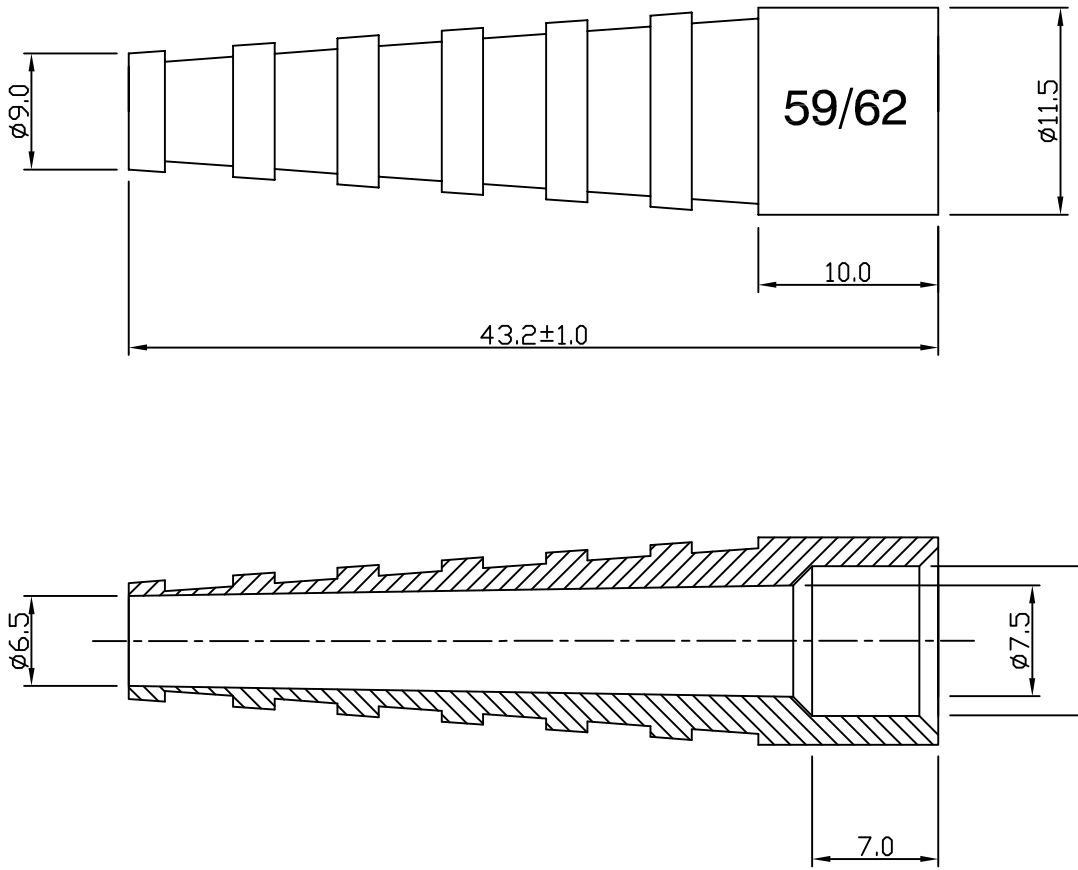

Part Number	Material	Colour
VSR100	PVC	Black
VSR101	PVC	Brown
VSR102	PVC	Red
VSR103	PVC	Orange
VSR104	PVC	Yellow
VSR105	PVC	Green
VSR106	PVC	Blue
VSR108	PVC	Grey
VSR109	PVC	White

Please read our datasheet & drawing disclaimer here.

DESCRIPTION OF REVISION	APPVD	ISS	DATE
Minor dimension corrections	JW	2	04 Apr 06
First Issue	SN	1	17 Apr 03

EMERSON Network Power

Connectivity Solutions
7-13 Russel Way,
Widford Industrial Estate,
Chelmsford,Essex,
CM1 3AA, UK.
Tel: +44 (0) 1245 359515
Fax: +44 (0) 1245 358938

SCALE: Not To Scale	DRAWN BY:	J Williams	TITLE: Strain Relief Boot
DIMENSIONS: mm	CHECKED BY:	M Terry	PART NUMBER: **VSR10X Series**
TOLERANCES: ± 0.2mm unless otherwise stated	APPROVED BY:	A Tusi	
	DATE:	04 Apr 06	PAGE: 1 of 1

COPYRIGHT © 2006 VITELEC ELECTRONICS LIMITED THIS DRAWING MAY NOT BE REPRODUCED IN WHOLE OR IN PART WITHOUT OUR WRITTEN PERMISSION