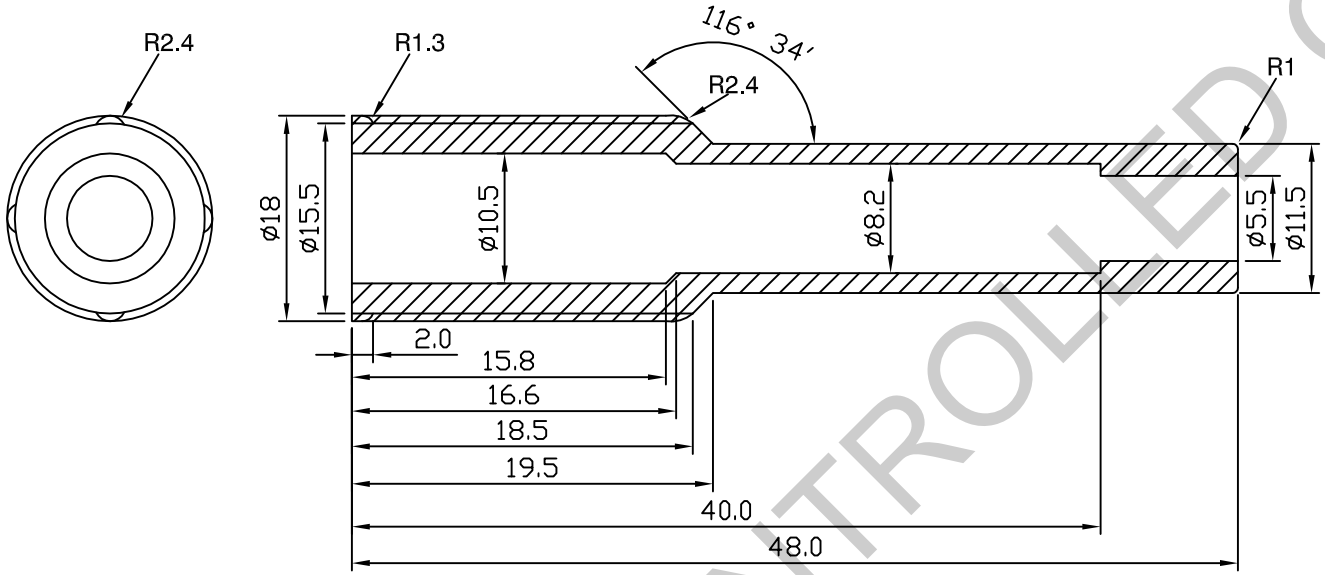

UNCONTROLLED COPY

DESCRIPTION OF REVISION	APPVD	ISS	DATE
First Issue	JW	1	23 Nov 0

Cinch Connectivity Solutions
7-13 Russel Way,
Widford Industrial Estate,
Chelmsford,Essex,
CM1 3AA, UK.
Tel: +44 (0) 1245 359515
Fax: +44 (0) 1245 358938

SCALE: Not To Scale	
DIMENSIONS: mm	
TOLERANCES: ± 0.2mm unless otherwise stated	
DRAWN BY:	Jon Williams
CHECKED BY:	M Terry
APPROVED BY:	A Tusi
DATE:	23 Nov 05

TITLE:

Weather Boot for F-Type Connectors

PART NUMBER:

WB-1

PAGE: 1 of 1

COPYRIGHT © 2005 VITELEC ELECTRONICS LIMITED

THIS DRAWING MAY NOT BE REPRODUCED IN WHOLE OR IN PART WITHOUT OUR WRITTEN PERMISSIO

Please read our datasheet & drawing disclaimer here.