DRV8210P 11-V H-Bridge Motor Driver with PWM Interface and Low-Power Sleep Mode

1 Features

- N-channel H-bridge motor driver
  - MOSFET on-resistance: HS + LS 1 Ω
  - Drives one bidirectional brushed DC motor
  - One single- or dual-coil latching relay
- 1.65-V to 11-V operating supply voltage range
- High output current capability: 1.76-A peak
- Standard PWM Interface (IN1/IN2)
- Supports 1.8-V, 3.3-V, and 5-V logic inputs
- Ultra low-power sleep mode
  - <84.5 nA @ V_{VM} = 5 V, V_{VCC} = 3.3 V, T_J = 25°C
  - Pin-to-pin with DRV8837 & DRV8837C
- Protection features
  - Undervoltage lockout (UVLO)
  - Overcurrent protection (OCP)
  - Thermal shutdown (TSD)
- Family of devices. See Section 5 for details.
  - DRV8210: 1.65-11 V, 1 Ω, multiple interfaces
  - DRV8210P: Sleep pin, PWM interface
  - DRV8212: 1.65-11 V, 280 mΩ, multiple interfaces
  - DRV8212P: Sleep pin, PWM interface
  - DRV8220: 4.5-18 V, 1 Ω, multiple interfaces

2 Applications

- Brushed DC motor, solenoid, & relay driving
- Water, gas, & electricity meters
- IP network camera IR cut filter
- Video doorbell
- Machine vision camera
- Electronic smart lock
- Electronic and robotic toys
- Blood pressure monitors
- Infusion pumps
- Electric toothbrush
- Beauty & grooming

3 Description

The DRV8210P is an integrated motor driver with four N-channel power FETs, charge pump regulator, and protection circuitry. The tripler charge pump architecture allows the device to operate down to 1.65 V to accommodate 1.8-V supply rails and low-battery conditions. The charge pump integrates all capacitors to reduce the overall solution size of the motor driver on a PCB and allows for 100% duty cycle operation.

The DRV8210P supports an industry standard PWM (IN1/IN2) control interface. The nSLEEP pin controls a low-power sleep mode which achieves ultra-low quiescent current draw by disabling the internal circuitry.

The device can supply up to 1.76-A peak output current. It operates with a supply voltage from 1.65 V to 5.5 V.

The driver offers robust internal protection features include supply undervoltage lockout (UVLO), output overcurrent (OCP), and device overtemperature (TSD).

The DRV8210P is part of a family of devices which come in pin-to-pin scalable $R_{DS(on)}$ and supply voltage options to support various loads and supply rails with minimal design changes. See Section 5 for information on the devices in this family. View our full portfolio of brushed motor drivers on ti.com.

Device Information

PART NUMBER (1)	PACKAGE	BODY SIZE (NOM)
DRV8210PDSG	WSON (8)	2.00 mm × 2.00 mm

(1) For all available packages, see the orderable addendum at the end of the data sheet.

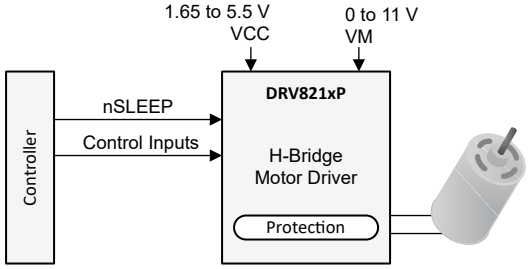

Simplified Schematic

An IMPORTANT NOTICE at the end of this data sheet addresses availability, warranty, changes, use in safety-critical applications, intellectual property matters and other important disclaimers. PRODUCTION DATA.

Table of Contents

1 Features....1
2 Applications....1
3 Description....1
4 Revision History....2
5 Device Comparison....3
6 Pin Configuration and Functions....4
7 Specifications....5
7.1 Absolute Maximum Ratings....5
7.2 ESD Ratings....5
7.3 Recommended Operating Conditions....5
7.4 Thermal Information....5
7.5 Electrical Characteristics....6
7.6 Typical Characteristics....7
8 Detailed Description....9
8.1 Overview....9
8.2 Functional Block Diagram....9
8.3 Feature Description....10
8.4 Device Functional Modes....12
9 Application and Implementation....14
9.1 Application Information....14
9.2 Typical Application....14
9.3 Current Capability and Thermal Performance....20
10 Power Supply Recommendations....24
10.1 Bulk Capacitance....24
11 Layout....25
11.1 Layout Guidelines....25
11.2 Layout Example....25
12 Device and Documentation Support....26
12.1 Documentation Support....26
12.2 Receiving Notification of Documentation Updates....26
12.3 Support Resources....26
12.4 Trademarks....26
12.5 Electrostatic Discharge Caution....26
12.6 Glossary....26
13 Mechanical, Packaging, and Orderable Information....27

4 Revision History

NOTE: Page numbers for previous revisions may differ from page numbers in the current version.

DATE	REVISION	NOTES
May 2021	*	Initial Release

Copyright © 2021 Texas Instruments Incorporated

5 Device Comparison

Table 5-1. Device Comparison Table

Device name	Supply voltage (V)	$R_{DS(on)}$ (mΩ)	I_{OCP} (A)	Interface options	Sleep mode entry	Pin-to-pin devices	Packages
DRV8210	1.65 to 11	950 (DRL), 1050 (DSG)	1.76	PWM, PH/EN, Half Bridge	Autosleep, VCC	DRV8210, DRV8212, DRV8220	SOT563 (DRL), WSON (DSG)
DRV8212	1.65 to 11	280	4				
DRV8220	4.5 to 18	1000	1.76		Autosleep, nSLEEP pin		
DRV8210P	1.65 to 11	1050	1.76	PWM	nSLEEP pin	DRV8837, DRV8837C, DRV8210P, DRV8212P	WSON (DSG)
DRV8212P	1.65 to 11	280	4				WSON (DSG)

6 Pin Configuration and Functions

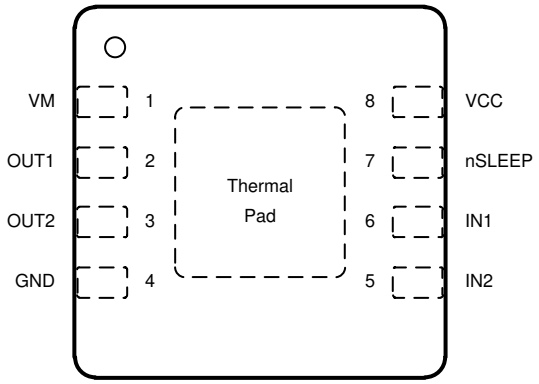

Figure 6-1. DRV8210P DSG Package 8-Pin WSON Top View

Table 6-1. Pin Functions

PIN		TYPE	DESCRIPTION
NAME	NO.		
GND	4	PWR	Device ground. Connect to system ground.
IN1	6	I	H-bridge control input. See Section 8.3.2. Internal pulldown resistor.
IN2	5	I	H-bridge control input. See Section 8.3.2. Internal pulldown resistor.
nSLEEP	7	I	Sleep mode input. Set this pin to logic high to enable the device. Set this pin to logic low to go to low-power sleep mode. Internal pulldown resistor.
OUT1	2	O	H-bridge output. Connect to the motor or other load.
OUT2	3	O	H-bridge output. Connect to the motor or other load.
VM	1	PWR	Motor power supply. Bypass this pin to the GND pin with a 0.1-µF ceramic capacitor as well as sufficient bulk capacitance rated for VM.
VCC	8	PWR	Logic power supply. Bypass this pin to the GND pin with a 0.1-µF ceramic capacitor rated for VCC.
PAD	—	—	Thermal pad. Connect to system ground.

Copyright © 2021 Texas Instruments Incorporated

7 Specifications

7.1 Absolute Maximum Ratings

Over operating temperature range (unless otherwise noted)[1]

		MIN	MAX	UNIT
Power supply pin voltage	VM	-0.5	12	V
Logic power supply pin voltage	VCC	-0.5	5.75	V
Power supply transient voltage ramp	VM, VCC	0	2	V/µs
Logic pin voltage	INx, nSLEEP	-0.5	5.75	V
Output pin voltage	OUTx	$-V_{SD}$	$V_{VM}+V_{SD}$	V
Output current[1]	OUTx	Internally Limited	Internally Limited	A
Ambient temperature, T_A		–40	125	°C
Junction temperature, T_J		–40	150	°C
Storage temperature, T_{stg}		–65	150	°C

(1) Stresses beyond those listed under *Absolute Maximum Ratings* may cause permanent damage to the device. These are stress ratings only, which do not imply functional operation of the device at these or any other conditions beyond those indicated under *Recommended Operating Conditions*. Exposure to absolute-maximum-rated conditions for extended periods may affect device reliability.

7.2 ESD Ratings

			VALUE	UNIT
$V_{(ESD)}$	Electrostatic discharge	Human body model (HBM), per ANSI/ESDA/JEDEC JS-001[1]	±2000	V
		Charged device model (CDM), per JEDEC specification JESD22-C101[2]	±500	

(1) JEDEC document JEP155 states that 500-V HBM allows safe manufacturing with a standard ESD control process. Pins listed as ± 2000 V may actually have higher performance.

(2) JEDEC document JEP157 states that 250-V CDM allows safe manufacturing with a standard ESD control process. Pins listed as ± 500 V may actually have higher performance.

7.3 Recommended Operating Conditions

Over operating temperature range (unless otherwise noted)

			MIN	NOM	MAX	UNIT
V_{VM}	Motor power supply voltage	VM	0		11	V
V_{VCC}	Logic power supply voltage	VCC	1.65		5.5	V
V_{IN}	Logic pin voltage	INx, nSLEEP	0		5.5	V
f_{PWM}	PWM frequency	INx,	0		100	kHz
I_{OUT} [1]	Peak output current	OUTx	0		1.76	A
T_A	Operating ambient temperature		–40		125	°C
T_J	Operating junction temperature		–40		150	°C

(1) Power dissipation and thermal limits must be observed.

7.4 Thermal Information

THERMAL METRIC[1]		DRV8210P DSG (WSON) 8 PINS	UNIT
$R_{\theta JA}$	Junction-to-ambient thermal resistance	99.6	°C/W
$R_{\theta JC(top)}$	Junction-to-case (top) thermal resistance	119.9	°C/W
$R_{\theta JB}$	Junction-to-board thermal resistance	66.3	°C/W

THERMAL METRIC[1]		DRV8210P DSG (WSON) 8 PINS	UNIT
Ψ_{JT}	Junction-to-top characterization parameter	13.9	°C/W
Ψ_{JB}	Junction-to-board characterization parameter	66.2	°C/W
$R_{\theta JC(bot)}$	Junction-to-case (bottom) thermal resistance	43.6	°C/W

(1) For more information about traditional and new thermal metrics, see the Semiconductor and IC Package Thermal Metrics application report.

7.5 Electrical Characteristics

0 V ≤ V_{VM} ≤ 11 V and 1.65 V ≤ V_{VCC} ≤ 11 V, –40°C ≤ T_J ≤ 150°C (unless otherwise noted).
Typical values are at T_J = 27°C, V_{VCC} = 3.3 V, and V_{VM} = 5 V.

PARAMETER		TEST CONDITIONS	MIN	TYP	MAX	UNIT
POWER SUPPLIES (VM, VCC)						
I_{VM}	VM active mode current	nSLEEP = 3.3 V, IN1 = 0 V, IN2 = 3.3 V		1.4	3.6	mA
I_{VMQ}	VM sleep mode current	Sleep mode, V_{VM} = 5 V, V_{VCC} = 3.3 V, T_J = 27°C		1	82	nA
I_{VCC}	VCC active mode current	nSLEEP = 3.3 V, IN1 = 0 V, IN2 = 3.3 V		0.18	3.6	mA
I_{VCCQ}	VCC sleep mode current	Sleep mode, V_{VM} = 5 V, V_{VCC} = 3.3 V, T_J = 27°C			2.5	nA
t_{WAKE}	Turnon time	Sleep mode to active mode delay			100	µs
t_{SLEEP}	Turnoff time	Active mode to sleep mode delay		2		µs
LOGIC-LEVEL INPUTS (INx, nSLEEP)						
V_{IL}	Input logic low voltage		0		0.4	V
V_{IH}	Input logic high voltage		1.45		5.5	V
V_{HYS}	Input logic hysteresis		49			mV
I_{IL}	Input logic low current	V_I = 0 V	-1		1	µA
I_{IH}	Input logic high current	V_I = 3.3 V	20		50	µA
R_{PD}	Input pulldown resistance	To GND		100		kΩ
DRIVER OUTPUTS (OUTx)						
$R_{DS(on)_HS}$	High-side MOSFET on resistance	I_O = 0.2 A,		525		mΩ
$R_{DS(on)_LS}$	Low-side MOSFET on resistance	I_O = –0.2 A,		525		mΩ
V_{SD}	Body diode forward voltage	I_O = –0.5 A		1		V
t_{RISE}	Output rise time	V_{OUTx} rising from 10% to 90% of V_{VM}		150		ns
t_{FALL}	Output fall time	V_{OUTx} falling from 90% to 10% of V_{VM}		150		ns
t_{PD}	Input to output propagation delay	Input crosses 0.8 V to V_{OUTx} = 0.1×V_{VM}, I_O = 1 A		135		ns
t_{DEAD}	Output dead time	Internal dead time		500		ns
PROTECTION CIRCUITS						
$V_{UVLO,VCC}$	VCC supply undervoltage lockout (UVLO)	Supply rising			1.65	V
		Supply falling	1.30			V
V_{UVLO_HYS}	Supply UVLO hysteresis	Rising to falling threshold		80		mV
t_{UVLO}	Supply undervoltage deglitch time	V_{VCC} falling to OUTx disabled		3.8		µs
I_{OCP}	Overcurrent protection trip point		1.76			A
t_{OCP}	Overcurrent protection deglitch time			4.2		µs
t_{RETRY}	Overcurrent protection retry time			1.7		ms
T_{TSD}	Thermal shutdown temperature		153		193	°C
T_{HYS}	Thermal shutdown hysteresis			22		°C

Copyright © 2021 Texas Instruments Incorporated

7.6 Typical Characteristics

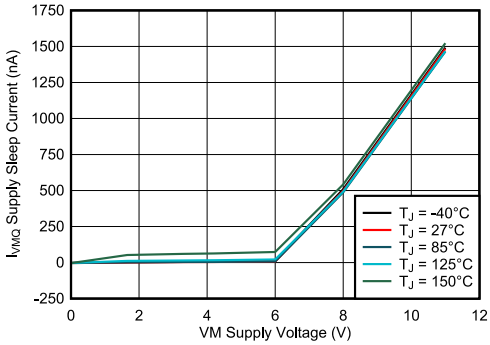

A. V_{VCC} = 3.3 V

Figure 7-1. Sleep Current (I_{VMQ}) vs. Supply Voltage (V_{VM})

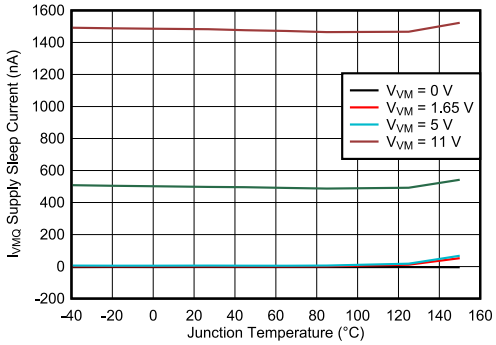

A. V_{VCC} = 3.3 V

Figure 7-2. Sleep Current (I_{VMQ}) vs. Junction Temperature (T_J)

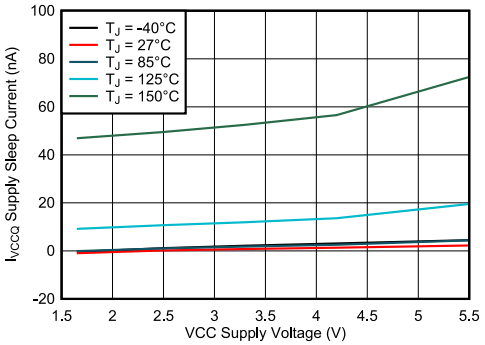

A. V_{VM} = 5 V

Figure 7-3. Sleep Current (I_{VCCQ}) vs. Supply Voltage (V_{VCC})

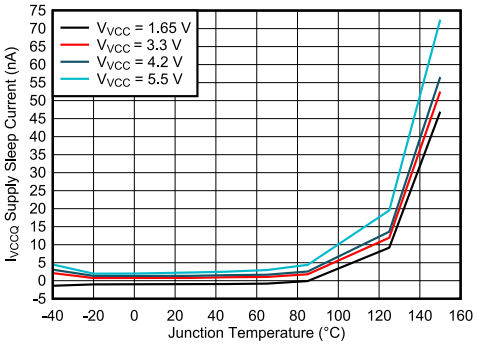

A. V_{VM} = 5 V

Figure 7-4. Sleep Current (I_{VCCQ}) vs. Junction Temperature (T_J)

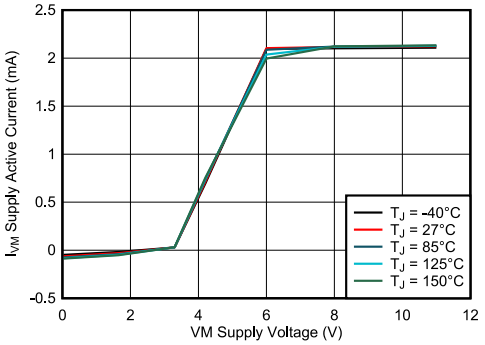

A. V_{VCC} = 3.3 V

Figure 7-5. Active Current (I_{VM}) vs. Supply Voltage (V_{VM})

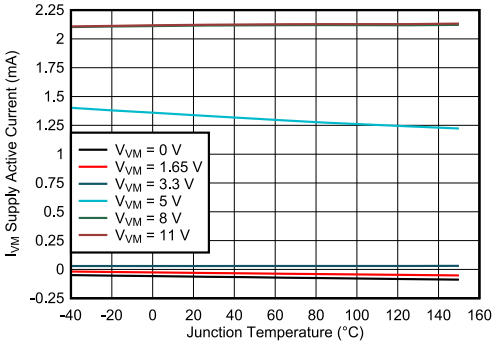

A. V_{VCC} = 3.3 V

Figure 7-6. Active Current (I_{VM}) vs. Junction Temperature (T_J)

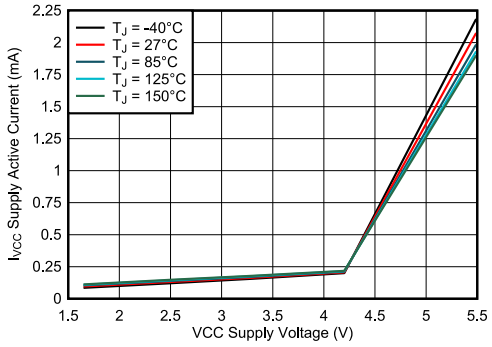

A. V_{VM} = 5 V

Figure 7-7. Active Current (I_{VCC}) vs. Supply Voltage (V_{VCC})

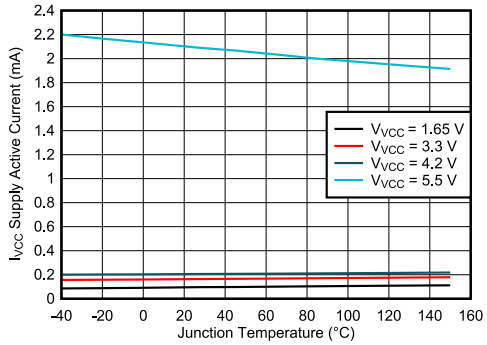

A. V_{VM} = 5 V

Figure 7-8. Active Current (I_{VCC}) vs. Junction Temperature (T_J)

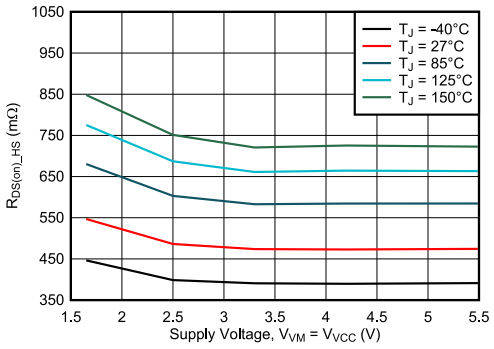

A. V_{VM} = V_{VCC}

Figure 7-9. High-Side $R_{DS(on)}$ vs. Supply Voltage

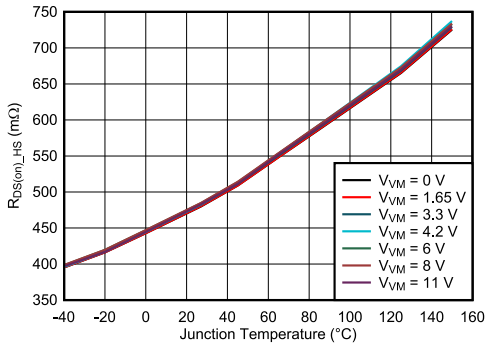

A. V_{VCC} = 3.3 V

Figure 7-10. High-Side $R_{DS(on)}$ vs. Junction Temperature (T_J)

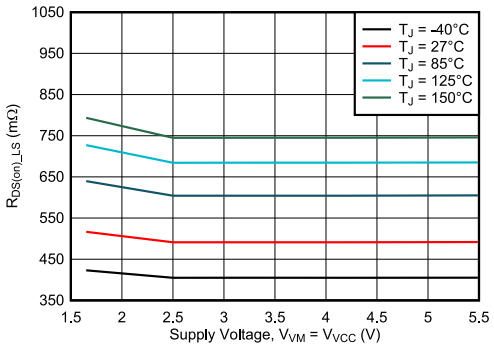

A. V_{VM} = V_{VCC}

Figure 7-11. Low-Side $R_{DS(on)}$ vs. Supply Voltage

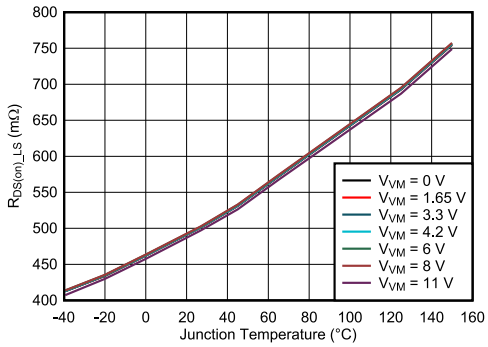

A. V_{VCC} = 3.3 V

Figure 7-12. Low-Side $R_{DS(on)}$ vs. Junction Temperature (T_J)

Copyright © 2021 Texas Instruments Incorporated

8 Detailed Description

8.1 Overview

DRV8210P is an integrated H-bridge driver controlled by a standard PWM (IN1/IN2) interface. The H-bridge can drive loads like brushed DC motors and bistable relays bidirectionally. To reduce area and external components on a printed circuit board, the device integrates a charge pump regulator and its capacitors. With separate motor (VM) and logic (VCC) supplies, the VM voltage can drop to 0 V without significant impact to $R_{DS(on)}$ and without triggering UVLO as long as the VCC supply is stable. The nSLEEP pin disables the device and puts it in a low-power sleep mode. The package PCB footprint is compatible with the DRV8837 and DRV8837C.

The integrated protection features protect the device in the case of a system fault. These include undervoltage lockout (UVLO), overcurrent protection (OCP), and overtemperature shutdown (TSD).

8.2 Functional Block Diagram

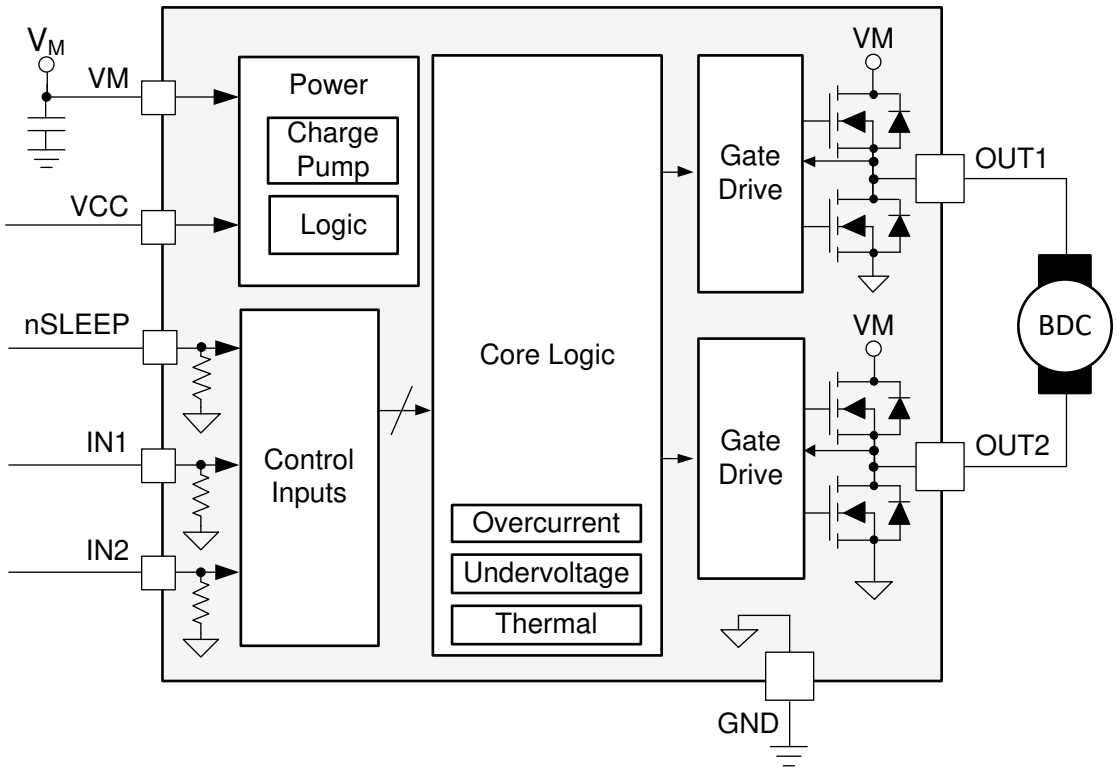

8.3 Feature Description

8.3.1 External Components

Table 8-1 lists the recommended external components for the device.

Table 8-1. Recommended external components

COMPONENT	PIN 1	PIN 2	RECOMMENDED
C_{VM1}	VM	GND	0.1-µF, low ESR ceramic capacitor, VM-rated.
C_{VM2}	VM	GND	Section 10.1, VM-rated.
C_{VCC}	VCC	GND	0.1-µF, low ESR ceramic capacitor, VCC-rated. Only needed for DSG package variant.

8.3.2 Control Modes

The DRV8210P supports a standard PWM (IN1/IN2) interface. The inputs can accept DC or pulse-width modulated (PWM) voltage signals with duty cycles from 0% to 100%. By default, the INx pins have internal pulldown resistors to ensure the outputs are Hi-Z if no inputs are present. The following section shows the truth table for the PWM interface. Additionally, the DRV8210P automatically handles the dead-time generation when switching between the high-side and low-side MOSFET of a half-bridge. Figure 8-1 describes the naming and configuration for the various H-bridge states described in the following sections.

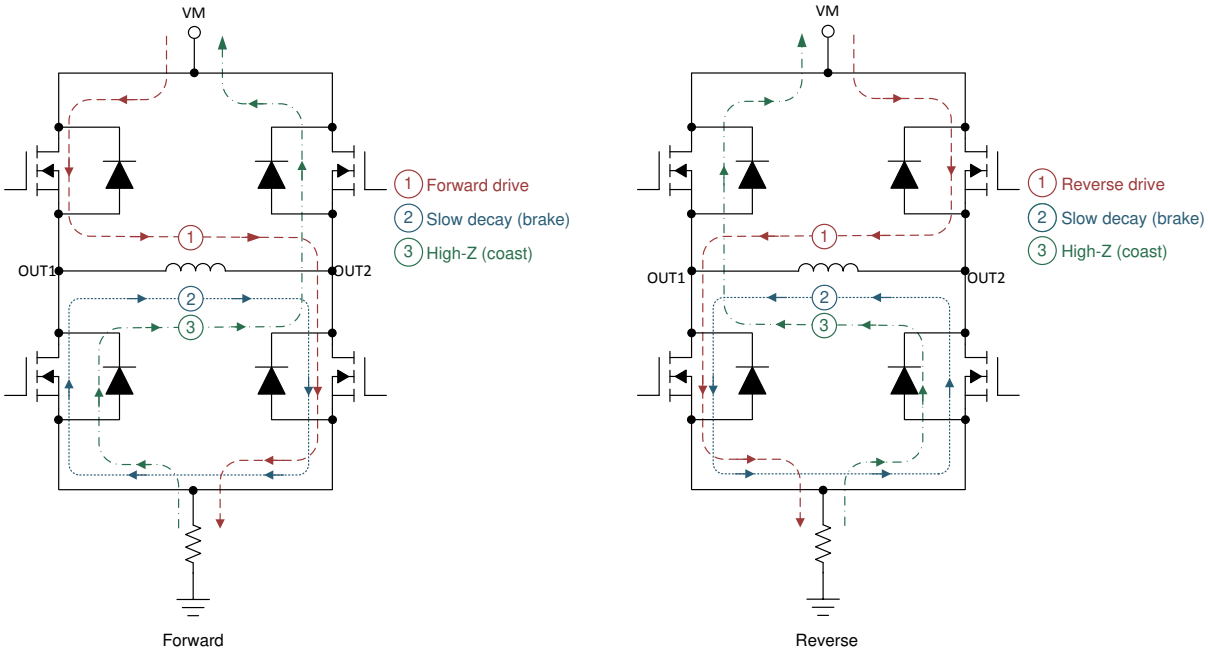

Figure 8-1. H-bridge states

8.3.2.1 PWM Control

The DRV8210P implements the same interface as the DRV8837/C devices for pin-to-pin replacement. The nSLEEP pin controls sleep mode. Table 8-2 shows the truth table for the PWM interface.

Table 8-2. PWM control

nSLEEP	IN1	IN2	OUT1	OUT2	DESCRIPTION
0	X	X	Hi-Z	Hi-Z	Low-power sleep mode
1	0	0	Hi-Z	Hi-Z	Coast (H-bridge Hi-Z)
1	0	1	L	H	Reverse (OUT2 → OUT1)
1	1	0	H	L	Forward (OUT1 → OUT2)

Copyright © 2021 Texas Instruments Incorporated

Table 8-2. PWM control (continued)

nSLEEP	IN1	IN2	OUT1	OUT2	DESCRIPTION
1	1	1	L	L	Brake (low-side slow decay)

8.3.3 Protection Circuits

The DRV8210P is fully protected against supply undervoltage, output overcurrent, and device overtemperature events.

8.3.3.1 Supply Undervoltage Lockout (UVLO)

If at any time the VCC supply voltage falls below the undervoltage lockout threshold voltage (V_{UVLO}), all MOSFETs in the H-bridge will be disabled. The charge pump and device logic are also disabled in this condition. Normal operation resumes when VCC rises above the V_{UVLO} threshold. The VM pin does not have UVLO and may drop to 0 V as long as the VCC rail is stable. Table 8-3 summarizes the conditions when the device enters UVLO.

Table 8-3. UVLO response conditions

V_{VM}	V_{VCC}	Device response
0 V to VM_{MAX}	<1.65 V	UVLO
0 V to VM_{MAX}	>1.65 V	Normal operation

8.3.3.2 OUTx Overcurrent Protection (OCP)

An analog current limit circuit on each MOSFET limits the peak current out of the device even in hard short circuit events. If the output current exceeds the overcurrent threshold, I_{OCP}, for longer than the overcurrent deglitch time, t_{OCP}, all MOSFETs in the H-bridge will be disabled. After t_{RETRY}, the MOSFETs are re-enabled according to the state of the IN1 and IN2 pins. If the overcurrent condition is still present, the cycle repeats; otherwise normal device operation resumes.

8.3.3.3 Thermal Shutdown (TSD)

If the die temperature exceeds the overtemperature limit T_{TSD}, all MOSFETs in the H-bridge will be disabled. Normal operation will resume when the overtemperature condition is removed and the die temperature drops below the T_{TSD} threshold.

8.3.4 Pin Diagrams

8.3.4.1 Logic-Level Inputs

Figure 8-2 shows the input structure for the logic-level input pins nSLEEP, IN1, and IN2.

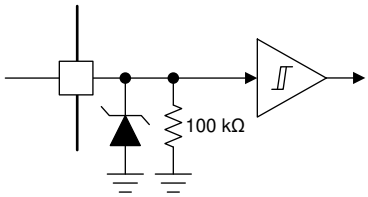

Figure 8-2. Logic-level input

8.4 Device Functional Modes

The DRV8210P has several different modes of operation depending on the system inputs and conditions.

8.4.1 Active Mode

In active mode, the H-bridge, charge pump, and internal logic are active and the device is ready to receive inputs. The device leaves active mode when entering low-power sleep mode or fault mode. When leaving sleep mode, nSLEEP must be held high for longer than the duration of t_{WAKE} to enable the device.

8.4.2 Low-Power Sleep Mode

The DRV8210P supports a low-power sleep mode to reduce current consumption from VM and VCC when the driver is not active. In low-power sleep mode, the device draws minimal current denoted by I_{VCCQ} and I_{VMQ}. When the nSLEEP pin is logic low, the device is in sleep mode. The nSLEEP pin has an internal pulldown

Copyright © 2021 Texas Instruments Incorporated

resistor to put the device into sleep mode if the nSLEEP pin is floating. The device returns to active mode when the nSLEEP pin is logic high.

8.4.3 Fault Mode

The DRV8210P enters fault mode when encountering a fault. This protects the device and the output load. Device behavior in fault mode depends on the fault condition, as described in Section 8.3.3. The device leaves the fault mode and re-enters active mode once the recovery condition is met. Table 8-4 summarizes the fault conditions, response, and recovery.

Table 8-4. Fault condition summary

FAULT	CONDITION	H-BRIDGE	RECOVERY
Undervoltage Lockout (UVLO)	VCC < $V_{UVLO,VCC}$ falling	Disabled	VCC > $V_{UVLO,VCC}$ rising
Overcurrent (OCP)	$I_{OUT} > I_{OCP}$	Disabled	t_{RETRY}
Thermal Shutdown (TSD)	$T_J > T_{TSD}$	Disabled	$T_J < T_{TSD} – T_{HYS}$

9 Application and Implementation

Note

Information in the following applications sections is not part of the TI component specification, and TI does not warrant its accuracy or completeness. TI's customers are responsible for determining suitability of components for their purposes. Customers should validate and test their design implementation to confirm system functionality.

9.1 Application Information

The application examples in this section highlight how to use the DRV8210P.

9.2 Typical Application

9.2.1 Full-Bridge Driving

A typical application for the DRV8210P is driving a brushed DC motor or single-coil bistable latching relay bidriectionally (in forward and reverse) using the outputs as a full-bridge, or H-bridge, configuration. Figure 9-1 shows an example schematic for driving a motor, and Figure 9-2 shows an example schematic for driving a latching relay.

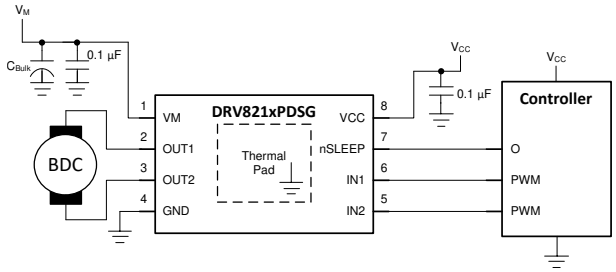

Figure 9-1. PWM interface motor-driving application

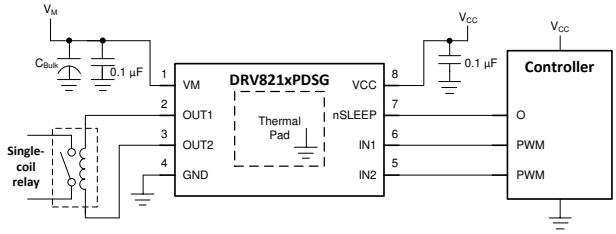

Figure 9-2. PWM interface relay-driving application

9.2.1.1 Design Requirements

Table 9-1 lists the required parameters for a typical usage case.

Table 9-1. System design requirements

DESIGN PARAMETER	REFERENCE	EXAMPLE VALUE
Motor supply voltage	V_M	11 V
Logic supply voltage	V_{CC}	3.3 V
Target motor RMS current	I_{motor}	300 mA
Target relay current	I_{relay}	50 mA

9.2.1.2 Detailed Design Procedure

9.2.1.2.1 Supply Voltage

The appropriate supply voltage depends on the ratings of the load (motor, solenoid, relay, etc.). In the case of a brushed DC motor, the supply voltage will impact the desired RPM. A higher voltage spins a brushed dc motor faster with the same PWM duty cycle applied to the power FETs. A higher voltage also increases the rate of current change through the inductive windings of a motor, solenoid, or relay.

9.2.1.2.2 Control Interface

Section 8.3.2.1 describes the PWM control interface. The DRV8210P is pin-to-pin compatible with the DRV8837 and DRV8837C PCB footprints. Figure 9-3 and Figure 9-4 show waveform examples of driving a motor with the PWM interface. Figure 9-5 and Figure 9-6 show waveform examples of driving a single-coil relay with the PWM

Copyright © 2021 Texas Instruments Incorporated

interface. The relay can be driven between the forward/reverse states and the brake/coast states as shown in the figures.

9.2.1.2.3 Low-Power Operation

Section 8.4.2 describes how to enter low-power sleep mode. When entering sleep mode, TI recommends setting all inputs as a logic low to minimize system power.

9.2.1.3 Application Curves

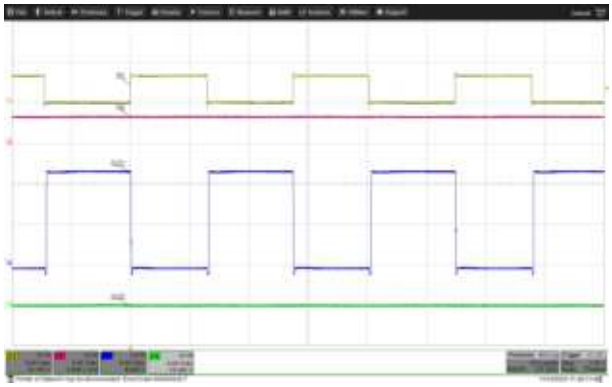

A. Channel 1 = IN1 Channel 2 = IN2 Channel 3 = OUT1 Channel 4 = OUT2

Figure 9-3. PWM driving for a motor with 50% duty cycle, INx and OUTx voltages

A. Channel 1 = IN1 Channel 2 = Motor Current Channel 3 = OUT1 Channel 4 = OUT2

Figure 9-4. PWM driving for a motor with 50% duty cycle, signals and motor current

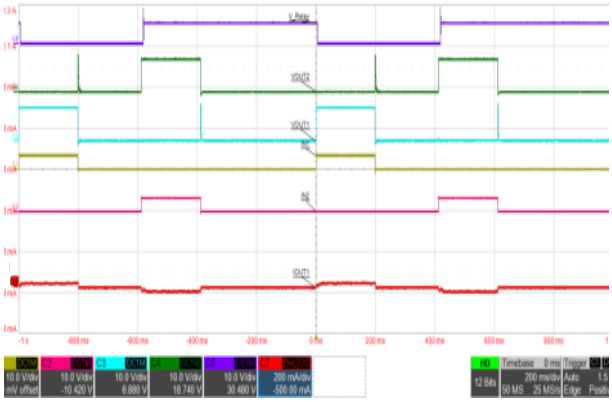

A. Channel 1 = IN1 Channel 2 = IN2 Channel 3 = V_{OUT1} Channel 4 = V_{OUT2} Channel 6 = Relay Switch Channel 7 = Relay Coil Current

Figure 9-5. PWM driving for a single-coil latching relay with driving profile FORWARD → COAST → REVERSE → COAST

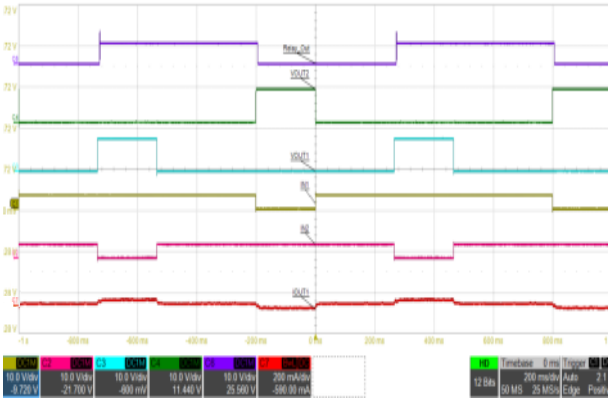

A. Channel 1 = IN1 Channel 2 = IN2 Channel 3 = V_{OUT1} Channel 4 = V_{OUT2} Channel 6 = Relay Switch Channel 7 = Relay Coil Current

Figure 9-6. PWM driving for a single-coil latching relay with driving profile FORWARD → BRAKE → REVERSE → BRAKE

9.2.2 Dual-Coil Relay Driving

The PWM interface may also be used to drive a dual-coil latching relay. Figure 9-7 shows an example schematic.

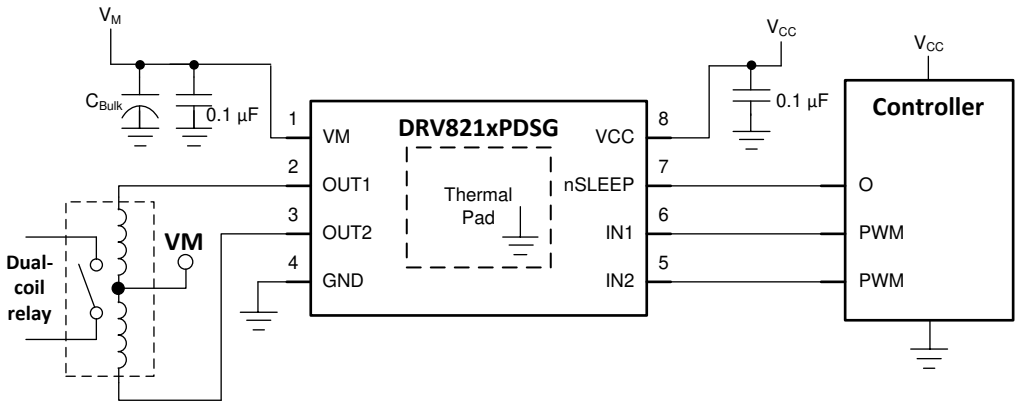

Figure 9-7. Dual-coil relay driving

9.2.2.1 Design Requirements

Table 9-2 provides example requirements for a dual-coil relay application.

Table 9-2. System design requirements

DESIGN PARAMETER	REFERENCE	EXAMPLE VALUE
Motor supply voltage	V_M	6 V
Logic supply voltage	V_{CC}	3.3 V
Relay current	I_{OUT1}, I_{OUT2}	500 mA pulse for 100 ms

9.2.2.2 Detailed Design Procedure

9.2.2.2.1 Supply Voltage

The appropriate supply voltage depends on the ratings of the load.

9.2.2.2.2 Control Interface

The PWM interface can be used to drive dual-coil relays. Section 8.3.2.1 describes the PWM control interface. Figure 9-8 and Figure 9-9 show a schematic and timing diagram for driving a dual-coil relay with the PWM interface.

Copyright © 2021 Texas Instruments Incorporated

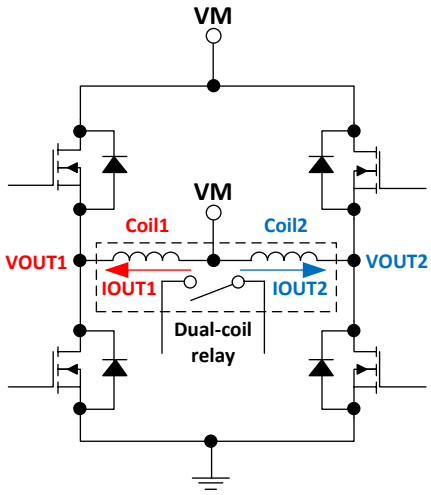

Figure 9-8. Schematic of dual-coil relay driven by the OUTx H-bridge

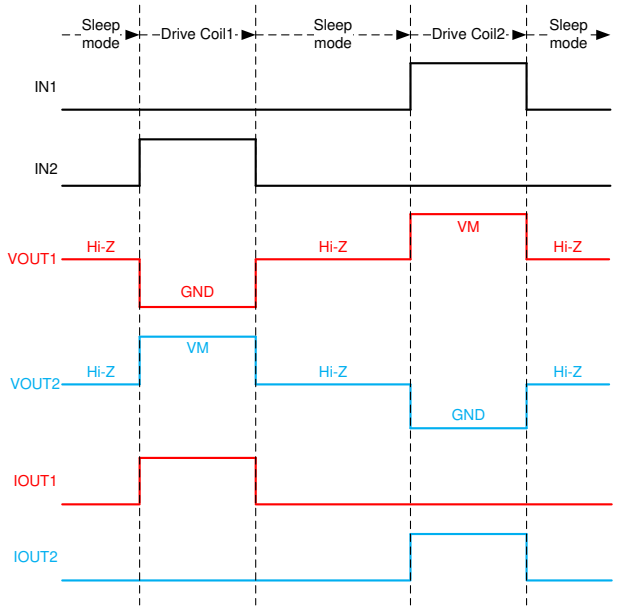

Figure 9-9. Timing diagram for driving a dual-coil relay with PWM interface

Table 9-3 shows the logic table for the PWM interface. The descriptions in this table reflect how the input and output states drive the dual coil relay. When Coil1 is driven (OUT1 voltage is at GND), The voltage at OUT2 will go to VM. Because the center tap of the relay is also at VM, no current flows through Coil2. The same is true when Coil2 is driven; Coil1 shorts to VM. The body diodes of the high-side FETs act as freewheeling diodes, so extra external diodes are not needed. Figure 9-10 shows oscilloscope traces for this application.

Table 9-3. PWM control table for dual-coil relay driving

IN1	IN2	OUT1	OUT2	DESCRIPTION
0	0	Hi-Z	Hi-Z	Outputs disabled (H-Bridge Hi-Z)
0	1	L	H	Drive Coil1
1	0	H	L	Drive Coil2
1	1	L	L	Drive Coil1 and Coil2 (invalid state for a dual-coil latching relay)

9.2.2.2.3 Low-Power Operation

Section 8.4.2 describes how to enter low-power sleep mode. When entering sleep mode, TI recommends setting all inputs as a logic low to minimize system power.

To minimize leakage current into the OUTx pins (especially in battery-powered applications), connect the load from OUTx to GND. As shown in the previous section, connecting the load from OUTx to VM is also possible, but there may be some small leakage current into OUTx when it is disabled.

9.2.2.3 Application Curves

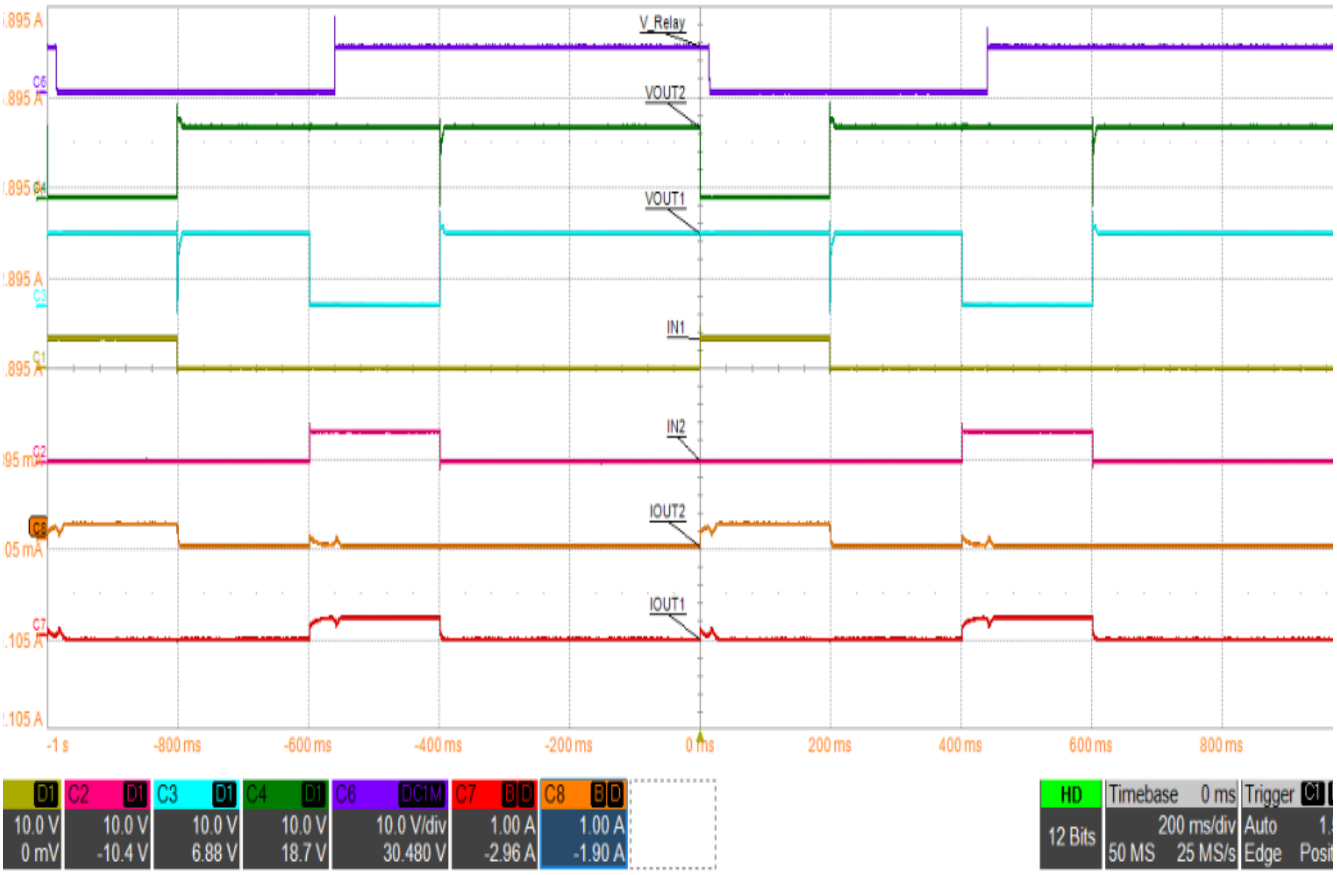

A. Channel 1 = IN1 Channel 2 = IN2 Channel 3 = V_{OUT1}

Channel 4 = V_{OUT2} Channel 6 = Relay Switch Channel 7 = Relay Coil1 Current

Channel 8 = Relay Coil2 Current

Figure 9-10. PWM driving for dual-coil relay

9.2.3 Current Sense

A small shunt resistor on the GND pin can provide current sense information back to the microcontroller ADC. The microcontroller can use this information to detect motor load conditions, such as stall. shows an example schematic using the DRL package. If better current sensing dynamic range is needed, an amplifier can be added as shown in Figure 9-11.

The DSG thermal pad may be connected to the board ground net or the GND pin/sense signal net.

Copyright © 2021 Texas Instruments Incorporated

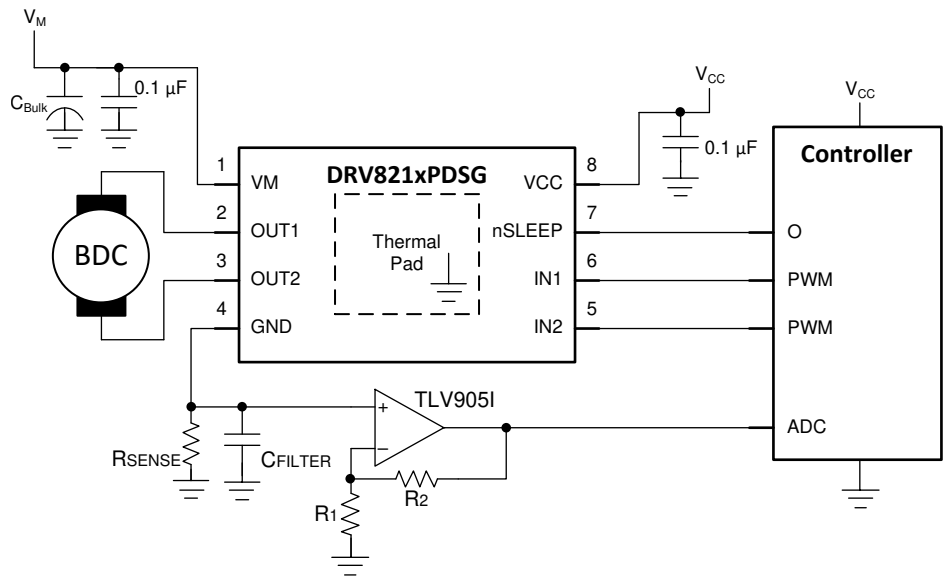

Figure 9-11. Current sense amplifier example

9.2.3.1 Design Requirements

Table 9-4 provides example requirements for a current sensing application.

Table 9-4. System design requirements

DESIGN PARAMETER	REFERENCE	EXAMPLE VALUE
Motor supply voltage	V_M	6 V
Logic supply voltage	V_{CC}	3.3 V
Maximum voltage across R_{SENSE}	V_{SENSE}	150 mV
Motor RMS current	I_{OUT1}, I_{OUT2}	500 mA
Motor stall current	$I_{OUT1,stall}$, $I_{OUT2,stall}$	1 A

9.2.3.2 Detailed Design Procedure

9.2.3.2.1 Shunt Resistor Sizing

The Absolute Maximum Ratings for the INx pins set the maximum voltage across the shunt resistor. If the signal on the INx pin is low, referenced at the board ground, then the INx pins are at a negative voltage with respect to the GND pin voltage. This sets the maximum sense voltage/GND pin voltage to 0.5 V. Figure 9-12 shows the relative pin voltages.

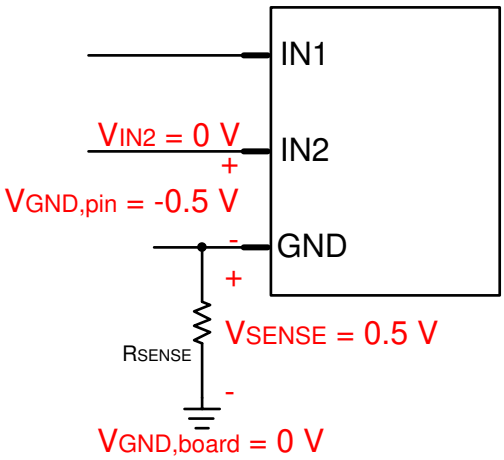

Figure 9-12. Pin voltages with respect to board ground using current sense resistor

This example uses 150 mV for the maximum V_{SENSE}, which is less than 0.5 V and provides some margin for safety or error. The maximum current through the motor will be the stall current, which is 1 A for this example. With this information, the sense resistance R_{SENSE} can be calculated from the equation below.

$$R_{SENSE} = V_{SENSE} / I_{STALL} = 0.15 / 1 = 0.15\ \Omega \quad (1)$$

Because the device GND pin voltage will vary with current through the sense resistor, the designers must also ensure that the logic pins meet V_{IL} and V_{IH} parameters,and the supply remains above V_{UVLO} for proper operation.

9.3 Current Capability and Thermal Performance

The output current and power dissipation capabilities of the driver depends heavily on the PCB design and external system conditions. This section provides some guidelines for calculating these values.

9.3.1 Power Dissipation and Output Current Capability

Total power dissipation for the device consists of three main components: quiescent supply current dissipation (P_{VM} and P_{VCC}), the power MOSFET switching losses (P_{SW}), and the power MOSFET $R_{DS(on)}$ (conduction) losses (P_{RDS}). While other factors may contribute additional power losses, they are typically insignificant compared to the three main items.

$$P_{TOT} = P_{VM} + P_{VCC} + P_{SW} + P_{RDS} \quad (2)$$

P_{VM} can be calculated from the nominal motor supply voltage (V_{VM}) and the I_{VM} active mode current specification. P_{VCC} can be calculated from the nominal logic supply voltage (V_{VCC}) and the I_{VCC} active mode current specification. When $V_{VCC} < V_{VM}$, the DRV8210 draws active current from the VM pin rather than the VCC pin. During this operating condition, I_{VCC} is typically less than 500 nA.

$$P_{VM} = V_{VM} \times I_{VM} \quad (3)$$

$$P_{VM} = 7\ mW = 5\ V \times 1.4\ mA \quad (4)$$

$$P_{VCC} = V_{VCC} \times I_{VCC} \quad (5)$$

$$P_{VCC} = 0.594\ mW = 3.3\ V \times 0.18\ mA \quad (6)$$

P_{SW} can be calculated from the nominal motor supply voltage (V_{VM}), average output current (I_{RMS}), switching frequency (f_{PWM}) and the device output rise (t_{RISE}) and fall (t_{FALL}) time specifications.

$$P_{SW} = P_{SW_RISE} + P_{SW_FALL} \quad (7)$$

$$P_{SW_RISE} = 0.5 \times V_M \times I_{RMS} \times t_{RISE} \times f_{PWM} \quad (8)$$

$$P_{SW_FALL} = 0.5 \times V_M \times I_{RMS} \times t_{FALL} \times f_{PWM} \quad (9)$$

$$P_{SW_RISE} = 3.75\ mW = 0.5 \times 5\ V \times 0.5\ A \times 150\ ns \times 20\ kHz \quad (10)$$

$$P_{SW_FALL} = 3.75\ mW = 0.5 \times 5\ V \times 0.5\ A \times 150\ ns \times 20\ kHz \quad (11)$$

$$P_{SW} = 7.5\ mW = 3.75\ mW + 3.75\ mW \quad (12)$$

P_{RDS} can be calculated from the device $R_{DS(on)}$ and average output current (I_{RMS}).

$$P_{RDS} = I_{RMS}^{\ 2} \times (R_{DS(ON)_HS} + R_{DS(ON)_LS}) \quad (13)$$

$R_{DS(ON)}$ has a strong correlation with the device temperature. Assuming a device junction temperature of 85 °C, $R_{DS(on)}$ could increase ~1.5x based on the normalized temperature data. The calculation below shows this derating factor.

Copyright © 2021 Texas Instruments Incorporated

$$P_{RDS} = 394\ mW = (0.5\ A)^2 \times (525\ m\Omega \times 1.5 + 525\ m\Omega \times 1.5) \quad (14)$$

Based on the example calculations above, the expressions below calculate the total expected power dissipation for the device.

$$P_{TOT} = P_{VM} + P_{VCC} + P_{SW} + P_{RDS} \quad (15)$$

$$P_{TOT} = 409\ mW = 7\ mW + 0.594\ mW + 7.5\ mW + 394\ mW \quad (16)$$

The driver's junction temperature can be estimated using P_{TOT}, device ambient temperature (T_A), and package thermal resistance ($R_{\theta JA}$). The value for $R_{\theta JA}$ depends heavily on the PCB design and copper heat sinking around the device. Section 9.3.2 describes this dependence in greater detail.

$$T_J = (P_{TOT} \times R_{\theta JA}) + T_A \quad (17)$$

$$T_J = 126°C = (0.409\ W \times 99.6\ °C/W) + 85°C \quad (18)$$

The device junction temperature should remain below its absolute maximum rating for all system operating conditions. The calculations in this section provide reasonable estimates for junction temperature. However, other methods based on temperature measurements taken during system operation are more realistic and reliable. Additional information on motor driver current ratings and power dissipation can be found in Section 9.3.2 and Section 12.1.1.

9.3.2 Thermal Performance

The datasheet-specified junction-to-ambient thermal resistance, $R_{\theta JA}$, is primarily useful for comparing various drivers or approximating thermal performance. However, the actual system performance may be better or worse than this value depending on PCB stackup, routing, number of vias, and copper area around the thermal pad. The length of time the driver drives a particular current will also impact power dissipation and thermal performance. This section considers how to design for steady-state and transient thermal conditions.

The data in this section was simulated using the following criteria:

- 2-layer PCB, standard FR4, 1-oz (35 mm copper thickness) or 2-oz copper thickness. Thermal vias are only present under the thermal pad (2 vias, 1.2mm spacing, 0.3 mm diameter, 0.025 mm Cu plating).
  - Top layer: DRV8210P WSON package footprint and copper plane heatsink. Top layer copper area is varied in simulation.
  - Bottom layer: ground plane thermally connected through vias under the thermal pad for DRV8210P. Bottom layer copper area varies with top copper area.
- 4-layer PCB, standard FR4. Outer planes are 1-oz (35 mm copper thickness) or 2-oz copper thickness. Inner planes are kept at 1-oz. Thermal vias are only present under the thermal pad (2 vias, 1.2mm spacing, 0.3 mm diameter, 0.025 mm Cu plating).
  - Top layer: DRV8210P WSON package footprint and copper plane heatsink. Top layer copper area is varied in simulation.
  - Mid layer 1: GND plane thermally connected to DRV8210P thermal pad through vias. The area of the ground plane is 74.2 mm x 74.2 mm.
  - Mid layer 2: power plane, no thermal connection. The area of the power plane is 74.2 mm x 74.2 mm.
  - Bottom layer: signal layer with small copper pad underneath DRV8210P and thermally connected through via stitching from the TOP and internal GND planes. Bottom layer thermal pad is the same size as the package (2 mm x 2 mm). Bottom pad size remains constant as top copper plane is varied.

Figure 9-13 shows an example of the simulated board for the HTSSOP package. Table 9-5 shows the dimensions of the board that were varied for each simulation.

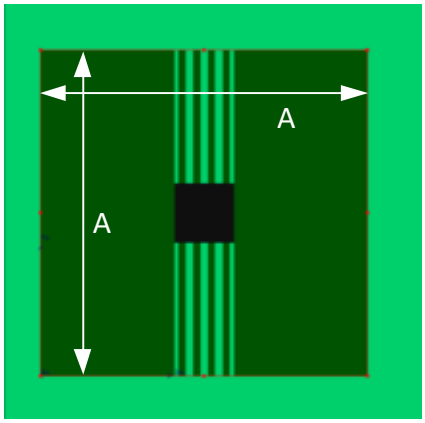

Figure 9-13. WSON PCB model top layer

Table 9-5. Dimension A for 16-pin PWP package

Cu area (mm^2)	Dimension A (mm)
2	15.11
4	20.98
8	29.27
16	40.99

9.3.2.1 Steady-State Thermal Performance

"Steady-state" conditions assume that the motor driver operates with a constant RMS current over a long period of time. The figures in this section show how $R_{\theta JA}$ and Ψ_{JB} (junction-to-board characterization parameter) change depending on copper area, copper thickness, and number of layers of the PCB. More copper area, more layers, and thicker copper planes decrease $R_{\theta JA}$ and Ψ_{JB}, which indicate better thermal performance from the PCB layout.

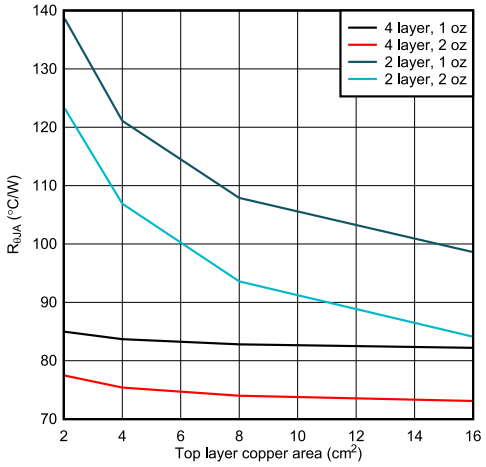

Figure 9-14. WSON, PCB junction-to-ambient thermal resistance vs copper area

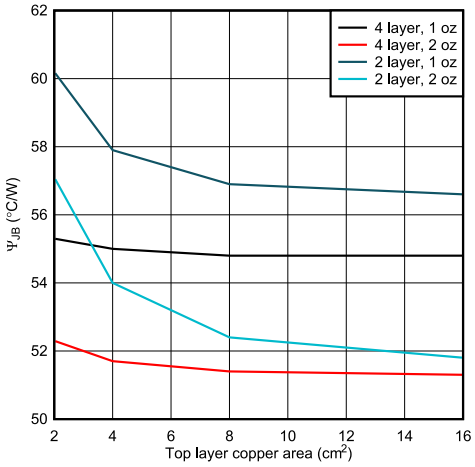

Figure 9-15. WSON, junction-to-board characterization parameter vs copper area

9.3.2.2 Transient Thermal Performance

The motor driver may experience different transient driving conditions that cause large currents to flow for a short duration of time. These may include

- Motor start-up when the rotor is initially stationary.

Copyright © 2021 Texas Instruments Incorporated

- Fault conditions when there is a supply or ground short to one of the motor outputs, and the overcurrent protection triggers.
- Briefly energizing a motor or solenoid for a limited time, then de-energizing.

For these transient cases, the duration of drive time is another factor that impacts thermal performance in addition to copper area and thickness. In transient cases, the thermal impedance parameter $Z_{\theta JA}$ denotes the junction-to-ambient thermal performance. The figures in this section show the simulated thermal impedances for 1-oz and 2-oz copper layouts for the WSON package. These graphs indicate better thermal performance with short current pulses. For short periods of drive time, the device die size and package dominates the thermal performance. For longer drive pulses, board layout has a more significant impact on thermal performance. Both graphs show the curves for thermal impedance split due to number of layers and copper area as the duration of the drive pulse duration increases. Long pulses can be considered steady-state performance.

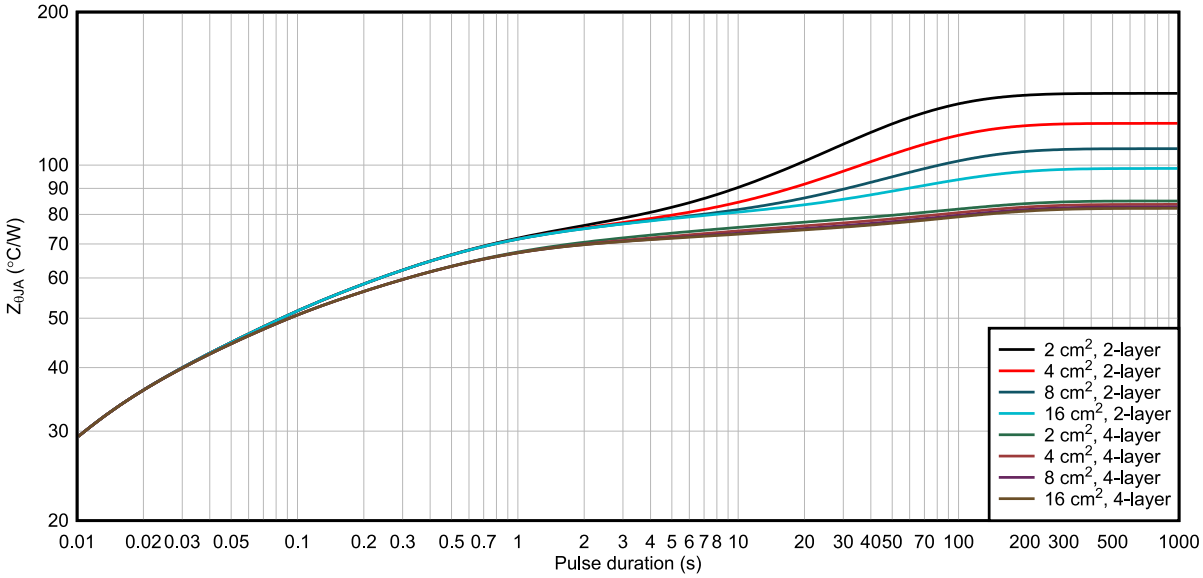

Figure 9-16. WSON package junction-to-ambient thermal impedance for 1-oz copper layouts

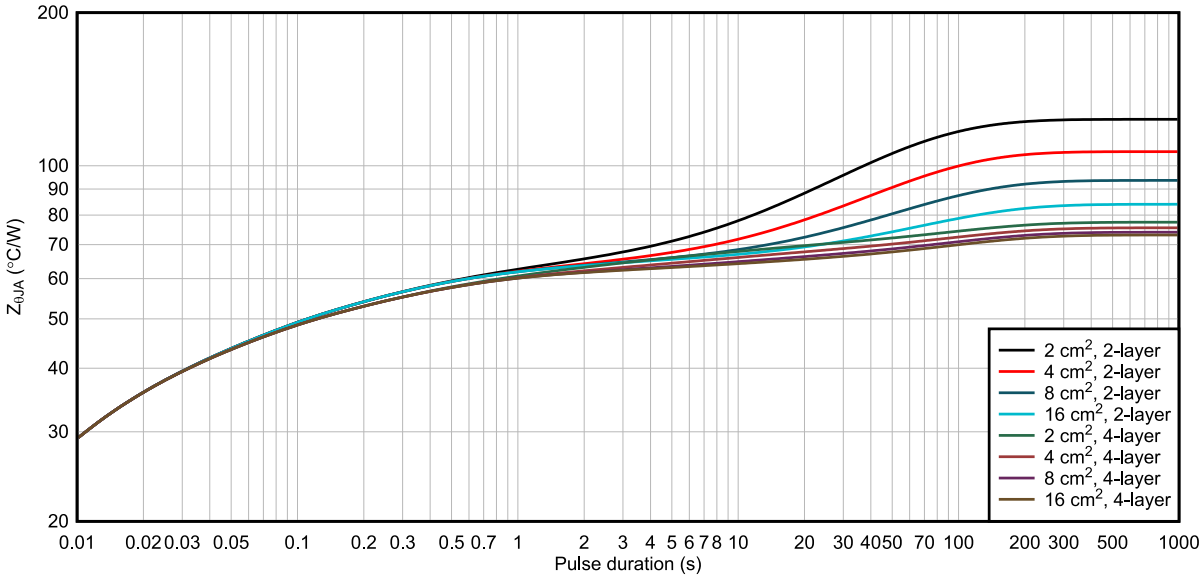

Figure 9-17. WSON package Junction-to-ambient thermal impedance for 2-oz copper layouts

10 Power Supply Recommendations

10.1 Bulk Capacitance

Having appropriate local bulk capacitance is an important factor in motor drive system design. Having more bulk capacitance is generally beneficial, while the disadvantages are increased cost and physical size.

The amount of local bulk capacitance needed depends on a variety of factors, including:

- The highest current required by the motor or load
- The capacitance of the power supply and ability to source current
- The amount of parasitic inductance between the power supply and motor system
- The acceptable voltage ripple of the system
- The motor braking method (if applicable)

The inductance between the power supply and motor drive system limits how the rate current can change from the power supply. If the local bulk capacitance is too small, the system responds to excessive current demands or dumps from the motor with a change in voltage. When adequate bulk capacitance is used, the motor voltage remains stable and high current can be quickly supplied.

The data sheet generally provides a recommended minimum value, but system level testing is required to determine the appropriately sized bulk capacitor.

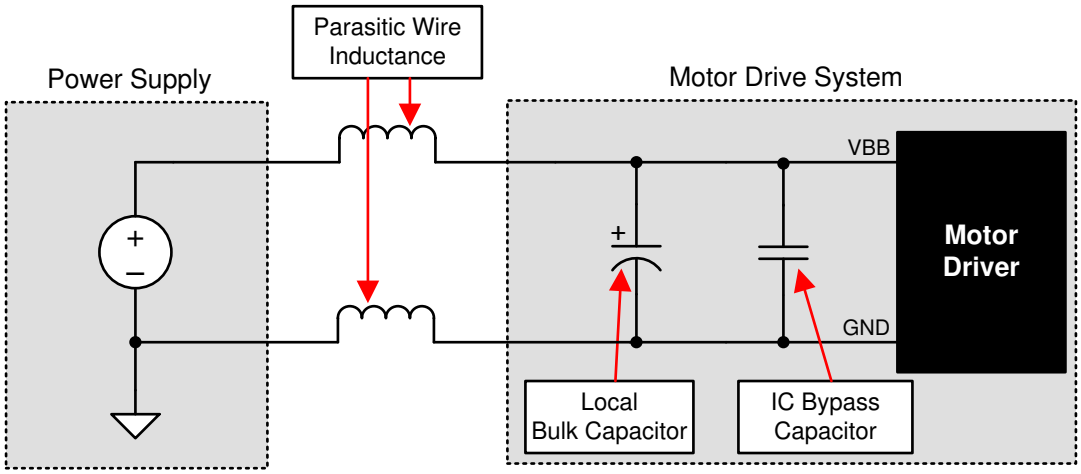

Figure 10-1. System Supply Parasitics Example

Copyright © 2021 Texas Instruments Incorporated

11 Layout

11.1 Layout Guidelines

Since the DRV8210P device has integrated power MOSFETs capable of driving high current, careful attention should be paid to the layout design and external component placement. Some design and layout guidelines are provided below. For more information on layout recommendations, please see the application note *Best Practices for Board Layout of Motor Drivers*.

- Low ESR ceramic capacitors should be utilized for the VM-to-GND and VCC-to-GND bypass capacitors. X5R and X7R types are recommended.
- The VM and VCC power supply capacitors should be placed as close to the device as possible to minimize the loop inductance.
- The VM power supply bulk capacitor can be of ceramic or electrolytic type, but should also be placed as close as possible to the device to minimize the loop inductance.
- VM, OUT1, OUT2, and GND carry the high current from the power supply to the outputs and back to ground. Thick metal routing should be utilized for these traces as is feasible.
- GND should connect directly on the PCB ground plane.
- The device thermal pad should be attached to the PCB top layer ground plane and internal ground plane (when available) through thermal vias to maximize the PCB heat sinking.
- The copper plane area attached to the thermal pad should be maximized to ensure optimal heat sinking.

11.2 Layout Example

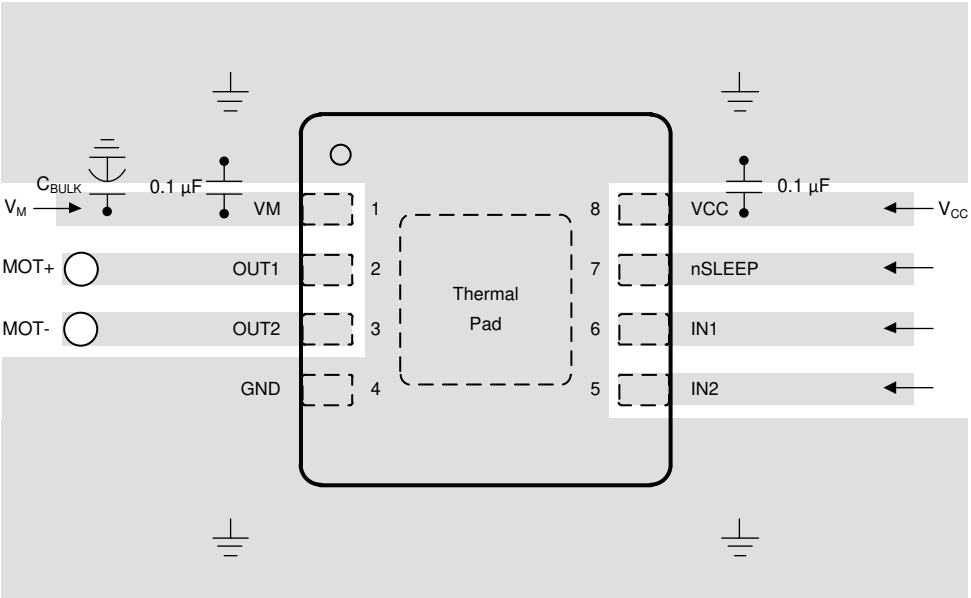

Figure 11-1. Simplified Layout Example

12 Device and Documentation Support

12.1 Documentation Support

12.1.1 Related Documentation

For related documentation see the following:

- Texas Instruments, *Calculating Motor Driver Power Dissipation* application report
- Texas Instruments, *PowerPAD™ Made Easy application report* application report
- Texas Instruments, *PowerPAD™ Thermally Enhanced Package* application report
- Texas Instruments, *Understanding Motor Driver Current Ratings* application report
- Texas Instruments, *Best Practices for Board Layout of Motor Drivers* application report

12.2 Receiving Notification of Documentation Updates

To receive notification of documentation updates, navigate to the device product folder on ti.com. Click on *Subscribe to updates* to register and receive a weekly digest of any product information that has changed. For change details, review the revision history included in any revised document.

12.3 Support Resources

TI E2E™ support forums are an engineer's go-to source for fast, verified answers and design help — straight from the experts. Search existing answers or ask your own question to get the quick design help you need.

Linked content is provided "AS IS" by the respective contributors. They do not constitute TI specifications and do not necessarily reflect TI's views; see TI's Terms of Use.

12.4 Trademarks

TI E2E™ is a trademark of Texas Instruments.
All trademarks are the property of their respective owners.

12.5 Electrostatic Discharge Caution

This integrated circuit can be damaged by ESD. Texas Instruments recommends that all integrated circuits be handled with appropriate precautions. Failure to observe proper handling and installation procedures can cause damage.

ESD damage can range from subtle performance degradation to complete device failure. Precision integrated circuits may be more susceptible to damage because very small parametric changes could cause the device not to meet its published specifications.

12.6 Glossary

TI Glossary	This glossary lists and explains terms, acronyms, and definitions.

Copyright © 2021 Texas Instruments Incorporated

13 Mechanical, Packaging, and Orderable Information

The following pages include mechanical, packaging, and orderable information. This information is the most current data available for the designated devices. This data is subject to change without notice and revision of this document. For browser-based versions of this data sheet, refer to the left-hand navigation.

PACKAGING INFORMATION

Orderable part number	Status (1)	Material type (2)	Package | Pins	Package qty | Carrier	RoHS (3)	Lead finish/ Ball material (4)	MSL rating/ Peak reflow (5)	Op temp (°C)	Part marking (6)
DRV8210PDSGR	Active	Production	WSON (DSG) | 8	3000 | LARGE T&R	Yes	NIPDAU	Level-1-260C-UNLIM	-40 to 125	210P
DRV8210PDSGR.A	Active	Production	WSON (DSG) | 8	3000 | LARGE T&R	Yes	NIPDAU	Level-1-260C-UNLIM	-40 to 125	210P

(1) **Status:** For more details on status, see our product life cycle.

(2) **Material type:** When designated, preproduction parts are prototypes/experimental devices, and are not yet approved or released for full production. Testing and final process, including without limitation quality assurance, reliability performance testing, and/or process qualification, may not yet be complete, and this item is subject to further changes or possible discontinuation. If available for ordering, purchases will be subject to an additional waiver at checkout, and are intended for early internal evaluation purposes only. These items are sold without warranties of any kind.

(3) **RoHS values:** Yes, No, RoHS Exempt. See the TI RoHS Statement for additional information and value definition.

(4) **Lead finish/Ball material:** Parts may have multiple material finish options. Finish options are separated by a vertical ruled line. Lead finish/Ball material values may wrap to two lines if the finish value exceeds the maximum column width.

(5) **MSL rating/Peak reflow:** The moisture sensitivity level ratings and peak solder (reflow) temperatures. In the event that a part has multiple moisture sensitivity ratings, only the lowest level per JEDEC standards is shown. Refer to the shipping label for the actual reflow temperature that will be used to mount the part to the printed circuit board.

(6) **Part marking:** There may be an additional marking, which relates to the logo, the lot trace code information, or the environmental category of the part.

Multiple part markings will be inside parentheses. Only one part marking contained in parentheses and separated by a "~" will appear on a part. If a line is indented then it is a continuation of the previous line and the two combined represent the entire part marking for that device.

Important Information and Disclaimer: The information provided on this page represents TI's knowledge and belief as of the date that it is provided. TI bases its knowledge and belief on information provided by third parties, and makes no representation or warranty as to the accuracy of such information. Efforts are underway to better integrate information from third parties. TI has taken and continues to take reasonable steps to provide representative and accurate information but may not have conducted destructive testing or chemical analysis on incoming materials and chemicals. TI and TI suppliers consider certain information to be proprietary, and thus CAS numbers and other limited information may not be available for release.

In no event shall TI's liability arising out of such information exceed the total purchase price of the TI part(s) at issue in this document sold by TI to Customer on an annual basis.

TAPE AND REEL INFORMATION

REEL DIMENSIONS

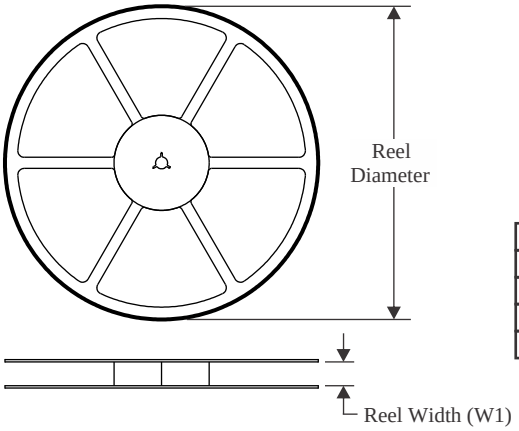

TAPE DIMENSIONS

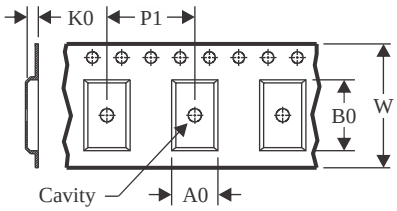

A0	Dimension designed to accommodate the component width
B0	Dimension designed to accommodate the component length
K0	Dimension designed to accommodate the component thickness
W	Overall width of the carrier tape
P1	Pitch between successive cavity centers

QUADRANT ASSIGNMENTS FOR PIN 1 ORIENTATION IN TAPE

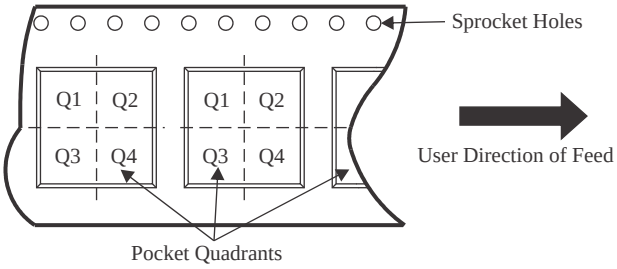

*All dimensions are nominal

Device	Package Type	Package Drawing	Pins	SPQ	Reel Diameter (mm)	Reel Width W1 (mm)	A0 (mm)	B0 (mm)	K0 (mm)	P1 (mm)	W (mm)	Pin1 Quadrant
DRV8210PDSGR	WSON	DSG	8	3000	180.0	8.4	2.3	2.3	1.15	4.0	8.0	Q2

TAPE AND REEL BOX DIMENSIONS

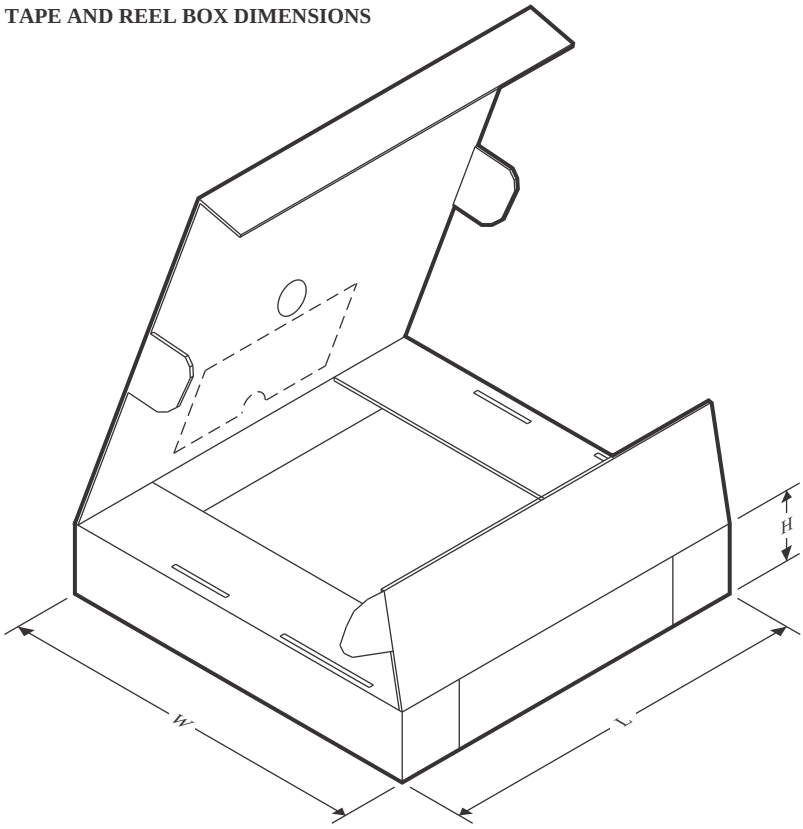

*All dimensions are nominal

Device	Package Type	Package Drawing	Pins	SPQ	Length (mm)	Width (mm)	Height (mm)
DRV8210PDSGR	WSON	DSG	8	3000	210.0	185.0	35.0

GENERIC PACKAGE VIEW

DSG 8

WSON - 0.8 mm max height

2 x 2, 0.5 mm pitch

PLASTIC SMALL OUTLINE - NO LEAD

This image is a representation of the package family, actual package may vary.
Refer to the product data sheet for package details.

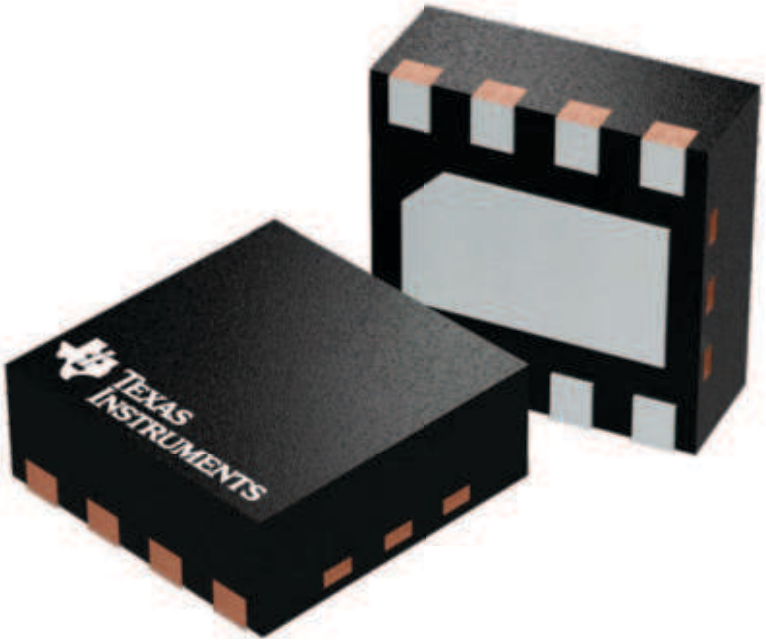

4224783/A

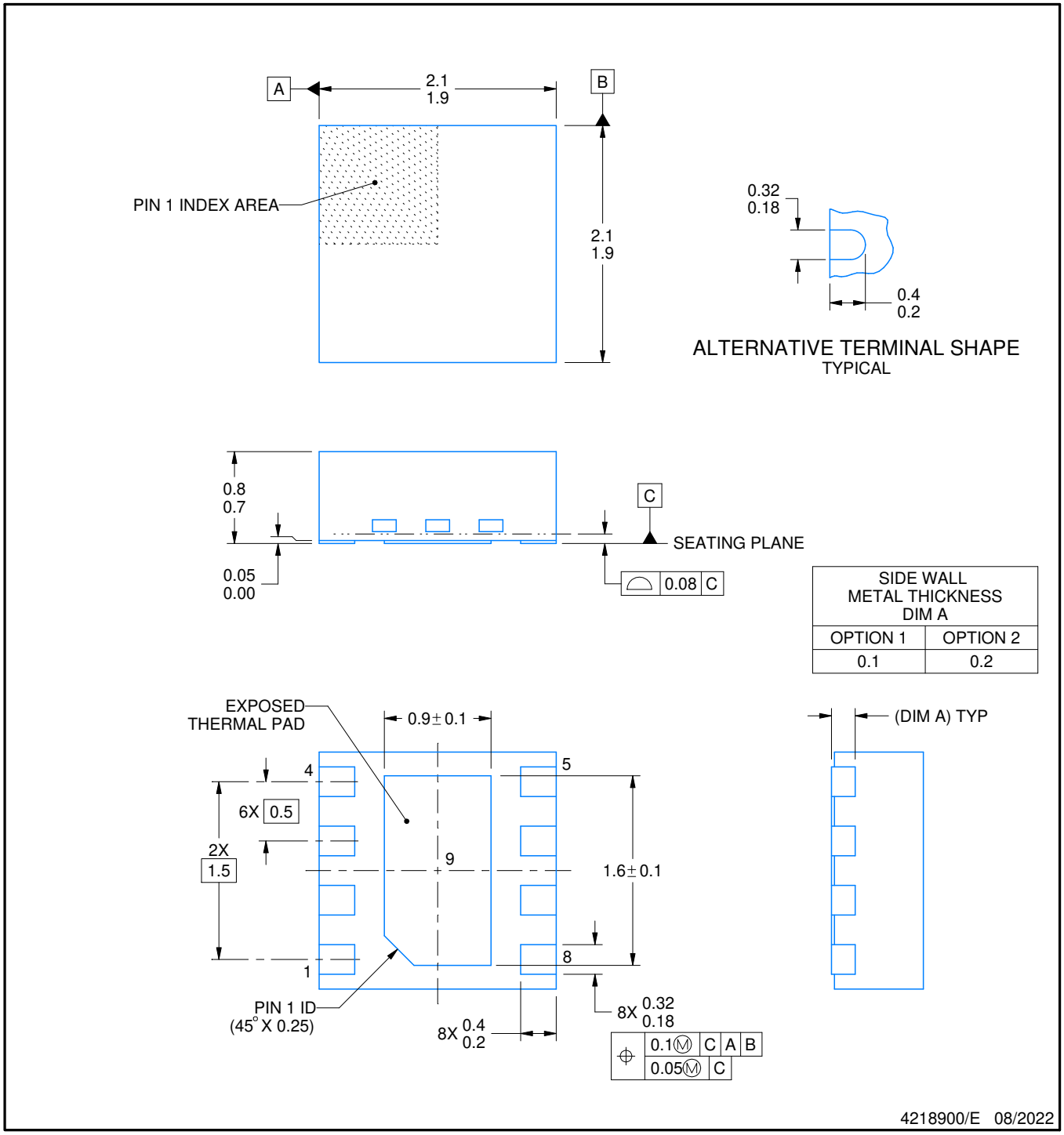

NOTES:

1. All linear dimensions are in millimeters. Any dimensions in parenthesis are for reference only. Dimensioning and tolerancing per ASME Y14.5M.
2. This drawing is subject to change without notice.
3. The package thermal pad must be soldered to the printed circuit board for thermal and mechanical performance.

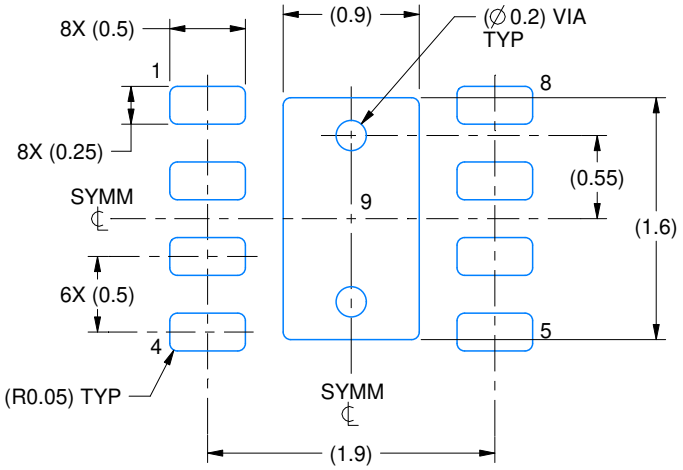

LAND PATTERN EXAMPLE
SCALE:20X

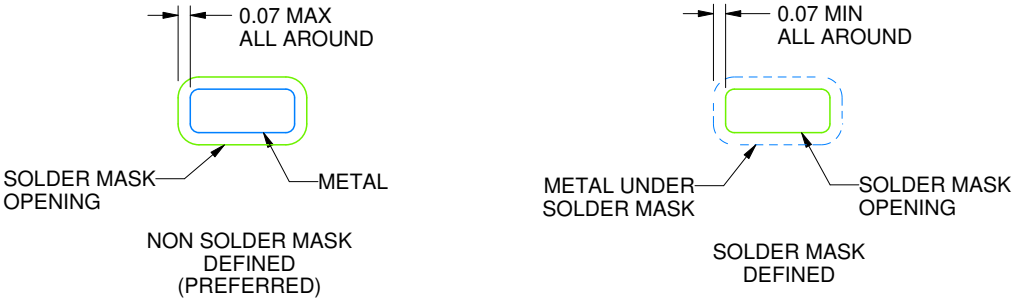

SOLDER MASK DETAILS

4218900/E 08/2022

NOTES: (continued)

4. This package is designed to be soldered to a thermal pad on the board. For more information, see Texas Instruments literature number SLUA271 (www.ti.com/lit/slua271).
5. Vias are optional depending on application, refer to device data sheet. If any vias are implemented, refer to their locations shown on this view. It is recommended that vias under paste be filled, plugged or tented.

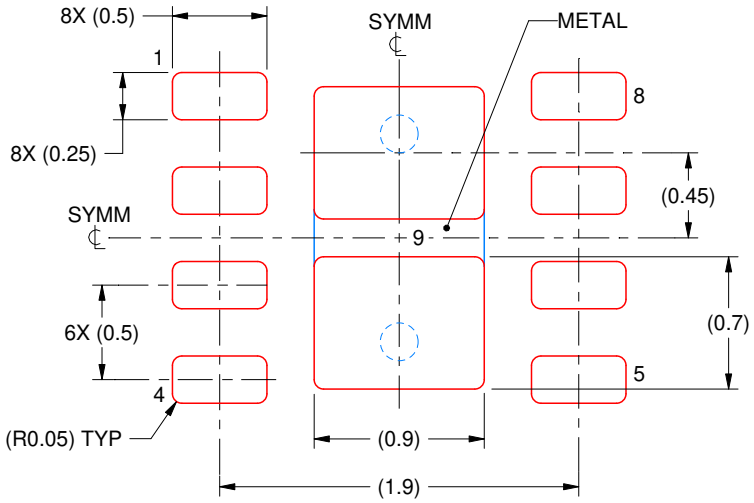

SOLDER PASTE EXAMPLE
BASED ON 0.125 mm THICK STENCIL

EXPOSED PAD 9:
87% PRINTED SOLDER COVERAGE BY AREA UNDER PACKAGE
SCALE:25X

4218900/E 08/2022

NOTES: (continued)

6. Laser cutting apertures with trapezoidal walls and rounded corners may offer better paste release. IPC-7525 may have alternate design recommendations.

IMPORTANT NOTICE AND DISCLAIMER

TI PROVIDES TECHNICAL AND RELIABILITY DATA (INCLUDING DATASHEETS), DESIGN RESOURCES (INCLUDING REFERENCE DESIGNS), APPLICATION OR OTHER DESIGN ADVICE, WEB TOOLS, SAFETY INFORMATION, AND OTHER RESOURCES “AS IS” AND WITH ALL FAULTS, AND DISCLAIMS ALL WARRANTIES, EXPRESS AND IMPLIED, INCLUDING WITHOUT LIMITATION ANY IMPLIED WARRANTIES OF MERCHANTABILITY, FITNESS FOR A PARTICULAR PURPOSE OR NON-INFRINGEMENT OF THIRD PARTY INTELLECTUAL PROPERTY RIGHTS.

These resources are intended for skilled developers designing with TI products. You are solely responsible for (1) selecting the appropriate TI products for your application, (2) designing, validating and testing your application, and (3) ensuring your application meets applicable standards, and any other safety, security, regulatory or other requirements.

These resources are subject to change without notice. TI grants you permission to use these resources only for development of an application that uses the TI products described in the resource. Other reproduction and display of these resources is prohibited. No license is granted to any other TI intellectual property right or to any third party intellectual property right. TI disclaims responsibility for, and you fully indemnify TI and its representatives against any claims, damages, costs, losses, and liabilities arising out of your use of these resources.

TI’s products are provided subject to TI’s Terms of Sale, TI’s General Quality Guidelines, or other applicable terms available either on ti.com or provided in conjunction with such TI products. TI’s provision of these resources does not expand or otherwise alter TI’s applicable warranties or warranty disclaimers for TI products. Unless TI explicitly designates a product as custom or customer-specified, TI products are standard, catalog, general purpose devices.

TI objects to and rejects any additional or different terms you may propose.

Copyright © 2026, Texas Instruments Incorporated

Last updated 10/2025