DRV8300: 100-V Three-Phase BLDC Gate Driver

1 Features

- 100-V Three Phase Half-Bridge Gate driver
  - Drives N-Channel MOSFETs (NMOS)
  - Gate Driver Supply (GVDD): 5-20 V
  - MOSFET supply (SHx) support upto 100 V
- Integrated Bootstrap Diodes (DRV8300D devices)
- Supports Inverting and Non-Inverting INLx inputs
- Bootstrap gate drive architecture
  - 750-mA source current
  - 1.5-A sink current
- Supports up to 15S battery powered applications
- Low leakage current on SHx pins (<55 µA)
- Absolute maximum BSTx voltage upto 125-V
- Supports negative transients upto -22-V on SHx
- Built-in cross conduction prevention
- Adjustable deadtime through DT pin for QFN package variants
- Fixed deadtime insertion of 200 nS for TSSOP package variants
- Supports 3.3-V and 5-V logic inputs with 20 V Abs max
- 4 nS typical propogation delay matching
- Compact QFN and TSSOP packages
- Efficient system design with Power Blocks
- Integrated protection features
  - BST undervoltage lockout (BSTUV)
  - GVDD undervoltage (GVDDUV)

2 Applications

- E-Bikes, E-Scooters, and E-Mobility
- Fans, Pumps, and Servo Drives
- Brushless-DC (BLDC) Motor Modules and PMSM
- Cordless Garden and Power Tools, Lawnmowers
- Cordless Vacuum Cleaners
- Drones, Robotics, and RC Toys
- Industrial and Logistics Robots

3 Description

DRV8300 is 100-V three half-bridge gate drivers, capable of driving high-side and low-side N-channel power MOSFETs. The DRV8300D generates the correct gate drive voltages using an integrated bootstrap diode and external capacitor for the high-side MOSFETs. The DRV8300N generates the correct gate drive voltages using an external bootstrap diode and external capacitor for the high-side MOSFETs. GVDD is used to generate gate drive voltage for the low-side MOSFETs. The Gate Drive architecture supports peak up to 750-mA source and 1.5-A sink currents.

The phase pins SHx is able to tolerate the significant negative voltage transients; while high side gate driver supply BSTx and GHx is able to support to higher positive voltage transients (125-V) abs max voltage which improves robustness of the system. Small propagation delay and delay matching specifications minimize the dead-time requirement which further improves efficiency. Undervoltage protection is provided for both low and high side through GVDD and BST undervoltage lockout.

Device Information(1)

PART NUMBER	PACKAGE	BODY SIZE (NOM)
DRV8300DIPW	TSSOP (20)	6.40 mm × 4.40 mm
DRV8300DPW	TSSOP (20)	6.40 mm × 4.40 mm
DRV8300NIPW	TSSOP (20)	6.40 mm × 4.40 mm
DRV8300NPW	TSSOP (20)	6.40 mm × 4.40 mm
DRV8300DRGE	VQFN (24)	4.00 mm × 4.00 mm
DRV8300NRGE	VQFN (24)	4.00 mm × 4.00 mm

(1) For all available packages, see the orderable addendum at the end of the data sheet.

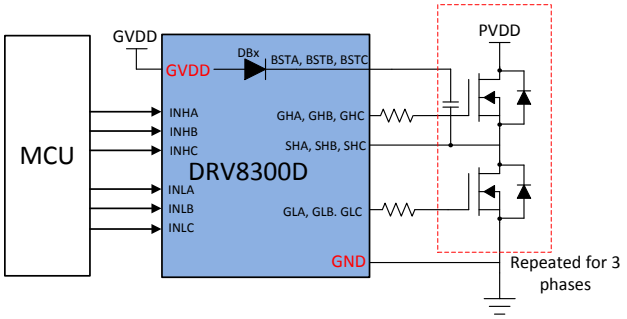

Simplified Schematic for DRV8300D

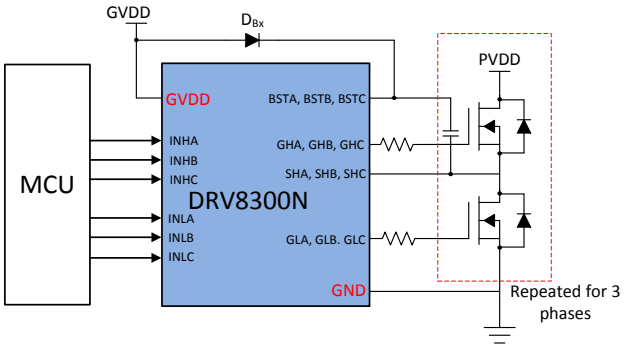

Simplified Schematic for DRV8300N

An IMPORTANT NOTICE at the end of this data sheet addresses availability, warranty, changes, use in safety-critical applications, intellectual property matters and other important disclaimers. PRODUCTION DATA.

Table of Contents

1 Features....1
2 Applications....1
3 Description....1
4 Revision History....2
5 Device Comparison Table....3
6 Pin Configuration and Functions....4
7 Specifications....6
7.1 Absolute Maximum Ratings....6
7.2 ESD Ratings Comm....6
7.3 Recommended Operating Conditions....6
7.4 Thermal Information....7
7.5 Electrical Characteristics....7
7.6 Timing Diagrams....9
7.7 Typical Characteristics....9
8 Detailed Description....11
8.1 Overview....11
8.2 Functional Block Diagram....12
8.3 Feature Description....14
8.4 Device Functional Modes....16
9 Application and Implementation....17
9.1 Application Information....17
9.2 Typical Application....18
10 Power Supply Recommendations....21
11 Layout....22
11.1 Layout Guidelines....22
11.2 Layout Example....22
12 Device and Documentation Support....23
12.1 Receiving Notification of Documentation Updates....23
12.2 Support Resources....23
12.3 Trademarks....23
12.4 Electrostatic Discharge Caution....23
12.5 Glossary....23
13 Mechanical, Packaging, and Orderable Information....23

4 Revision History

NOTE: Page numbers for previous revisions may differ from page numbers in the current version.

Changes from Revision C (February 2021) to Revision D (March 2022)	Page
• Increased max voltage on BSTx, GHx and SHx pin	6

Changes from Revision B (February 2021) to Revision C (February 2021)	Page
• Removed "Preview" status from RGE devices	1

Changes from Revision A (December 2020) to Revision B (February 2021)	Page
• Removed "Preview" status from PW devices	1

Changes from Revision * (September 2020) to Revision A (December 2020)	Page
• Updated device status to Production Data	1

Copyright © 2022 Texas Instruments Incorporated

5 Device Comparison Table

Device Variants	Package	Integrated Bootstrap Diode	GLx polarity with respect to INLx Input	Deadtime
DRV8300DI	20-Pin TSSOP	Yes	Inverted	Fixed
DRV8300D		Yes	Non-Inverted	Fixed
DRV8300N		No	Non-Inverted	Fixed
DRV8300NI		No	Inverted	Fixed
DRV8300N	24-Pin VQFN	No	Non-Inverted or Inverted	Variable
DRV8300D		Yes	Non-Inverted or Inverted	Variable

Copyright © 2022 Texas Instruments Incorporated

6 Pin Configuration and Functions

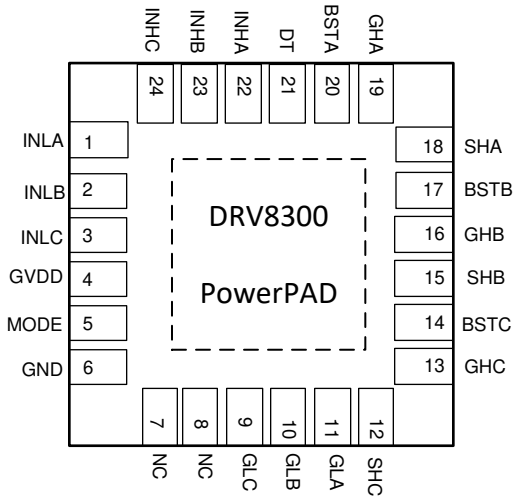

Figure 6-1. DRV8300D, DRV8300N RGE Package 24-Pin VQFN With Exposed Thermal Pad Top View

Table 6-1. Pin Functions—24-Pin DRV8300 Devices

PIN		TYPE[(1)]	DESCRIPTION
NAME	NO.		
BSTA	20	O	Bootstrap output pin. Connect capacitor between BSTA and SHA
BSTB	17	O	Bootstrap output pin. Connect capacitor between BSTB and SHB
BSTC	14	O	Bootstrap output pin. Connect capacitor between BSTC and SHC
DT	21	I	Deadtime input pin. Connect resistor to ground for variable deadtime, fixed deadtime when left it floating
GHA	19	O	High-side gate driver output. Connect to the gate of the high-side power MOSFET.
GHB	16	O	High-side gate driver output. Connect to the gate of the high-side power MOSFET.
GHC	13	O	High-side gate driver output. Connect to the gate of the high-side power MOSFET.
GLA	11	O	Low-side gate driver output. Connect to the gate of the low-side power MOSFET.
GLB	10	O	Low-side gate driver output. Connect to the gate of the low-side power MOSFET.
GLC	9	O	Low-side gate driver output. Connect to the gate of the low-side power MOSFET.
INHA	22	I	High-side gate driver control input. This pin controls the output of the high-side gate driver.
INHB	23	I	High-side gate driver control input. This pin controls the output of the high-side gate driver.
INHC	24	I	High-side gate driver control input. This pin controls the output of the high-side gate driver.
INLA	1	I	Low-side gate driver control input. This pin controls the output of the low-side gate driver.
INLB	2	I	Low-side gate driver control input. This pin controls the output of the low-side gate driver.
INLC	3	I	Low-side gate driver control input. This pin controls the output of the low-side gate driver.
MODE	5	I	Mode Input controls polarity of GLx compared to INLx inputs. Mode pin floating: GLx output polarity same(Non-Inverted) as INLx input Mode pin to GVDD: GLx output polarity inverted compared to INLx input
NC	7, 8	NC	No internal connection. This pin can be left floating or connected to system ground.
GND	6	PWR	Device ground.
SHA	18	I	High-side source sense input. Connect to the high-side power MOSFET source.
SHB	15	I	High-side source sense input. Connect to the high-side power MOSFET source.
SHC	12	I	High-side source sense input. Connect to the high-side power MOSFET source.
GVDD	4	PWR	Gate driver power supply input. Connect a X5R or X7R, GVDD-rated ceramic and greater then or equal to 10-uF local capacitance between the GVDD and GND pins.

(1) PWR = power, I = input, O = output, NC = no connection

Copyright © 2022 Texas Instruments Incorporated

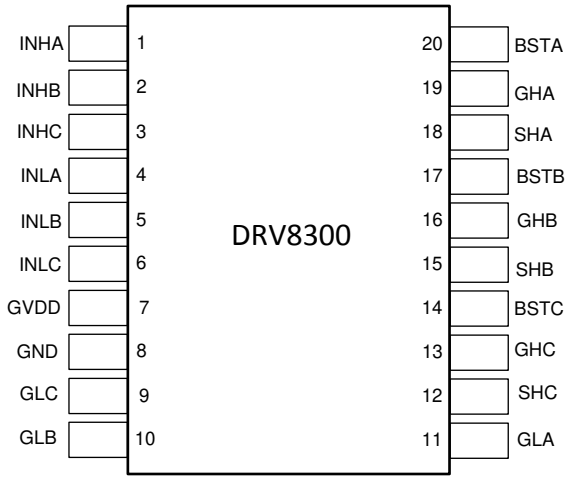

Figure 6-2. DRV8300D, DRV8300N, DRV8300DI, DRV8300NI PW Package 20-Pin TSSOP Top View

Table 6-2. Pin Functions—20-Pin DRV8300 Devices

PIN		TYPE[1]	DESCRIPTION
NAME	NO.		
BSTA	20	O	Bootstrap output pin. Connect capacitor between BSTA and SHA
BSTB	17	O	Bootstrap output pin. Connect capacitor between BSTB and SHB
BSTC	14	O	Bootstrap output pin. Connect capacitor between BSTC and SHC
GHA	19	O	High-side gate driver output. Connect to the gate of the high-side power MOSFET.
GHB	16	O	High-side gate driver output. Connect to the gate of the high-side power MOSFET.
GHC	13	O	High-side gate driver output. Connect to the gate of the high-side power MOSFET.
GLA	11	O	Low-side gate driver output. Connect to the gate of the low-side power MOSFET.
GLB	10	O	Low-side gate driver output. Connect to the gate of the low-side power MOSFET.
GLC	9	O	Low-side gate driver output. Connect to the gate of the low-side power MOSFET.
INHA	1	I	High-side gate driver control input. This pin controls the output of the high-side gate driver.
INHB	2	I	High-side gate driver control input. This pin controls the output of the high-side gate driver.
INHC	3	I	High-side gate driver control input. This pin controls the output of the high-side gate driver.
INLA	4	I	Low-side gate driver control input. This pin controls the output of the low-side gate driver.
INLB	5	I	Low-side gate driver control input. This pin controls the output of the low-side gate driver.
INLC	6	I	Low-side gate driver control input. This pin controls the output of the low-side gate driver.
GND	8	PWR	Device ground.
SHA	18	I	High-side source sense input. Connect to the high-side power MOSFET source.
SHB	15	I	High-side source sense input. Connect to the high-side power MOSFET source.
SHC	12	I	High-side source sense input. Connect to the high-side power MOSFET source.
GVDD	7	PWR	Gate driver power supply input. Connect a X5R or X7R, GVDD-rated ceramic and greater then or equal to 10-uF local capacitance between the GVDD and GND pins.

1. PWR = power, I = input, O = output, NC = no connection

7 Specifications

7.1 Absolute Maximum Ratings

over operating temperature range (unless otherwise noted)[1]

		MIN	MAX	UNIT
Gate driver regulator pin voltage	GVDD	-0.3	21.5	V
Bootstrap pin voltage	BSTx	-0.3	125	V
Bootstrap pin voltage	BSTx with respect to SHx	-0.3	21.5	V
Logic pin voltage	INHx, INLx, MODE, DT	-0.3	V_{GVDD}+0.3	V
High-side gate drive pin voltage	GHx	-22	125	V
High-side gate drive pin voltage	GHx with respect to SHx	-0.3	22	V
Transient 500-ns high-side gate drive pin voltage	GHx with respect to SHx	-5	22	V
Low-side gate drive pin voltage	GLx	-0.3	V_{GVDD}+0.3	V
Transient 500-ns low-side gate drive pin voltage	GLx	-5	V_{GVDD}+0.3	V
High-side source pin voltage	SHx	-22	110	V
Ambient temperature, T_A		–40	125	°C
Junction temperature, T_J		–40	150	°C
Storage temperature, T_{stg}		–65	150	°C

(1) Operation outside the Absolute Maximum Ratings may cause permanent device damage. Absolute Maximum Ratings do not imply functional operation of the device at these or any other conditions beyond those listed under Recommended Operating Conditions. If used outside the Recommended Operating Conditions but within the Absolute Maximum Ratings, the device may not be fully functional, and this may affect device reliability, functionality, performance, and shorten the device lifetime

7.2 ESD Ratings Comm

			VALUE	UNIT
$V_{(ESD)}$	Electrostatic discharge	Human body model (HBM), per ANSI/ESDA/JEDEC JS-001[1]	±1000	V
		Charged device model (CDM), per JEDEC specification JESD22-C101[2]	±250	

(1) JEDEC document JEP155 states that 500-V HBM allows safe manufacturing with a standard ESD control process.
(2) JEDEC document JEP157 states that 250-V CDM allows safe manufacturing with a standard ESD control process.

7.3 Recommended Operating Conditions

over operating temperature range (unless otherwise noted)

			MIN	NOM	MAX	UNIT
V_{GVDD}	Power supply voltage	GVDD	5		20	V
V_{SHx}	High-side source pin voltage	SHx	-2		85	V
V_{SHx}	Transient 2µs high-side source pin voltage	SHx	-22		85	V
V_{BST}	Bootstrap pin voltage	BSTx	5		105	V
V_{BST}	Bootstrap pin voltage	BSTx with respect to SHx	5		20	V
V_{IN}	Logic input voltage	INHx, INLx, MODE, DT	0		GVDD	V
f_{PWM}	PWM frequency	INHx, INLx	0		200	kHz
V_{SHSL}	Slew rate on SHx pin (DRV8300D and DRV8300DI)				2	V/ns
V_{SHSL}	Slew rate on SHx pin (DRV8300N and DRV8300NI)				50	V/ns
C_{BOOT} [1]	Capacitor between BSTx and SHx (DRV8300D and DRV8300DI)				1	µF
T_A	Operating ambient temperature		–40		125	°C

Copyright © 2022 Texas Instruments Incorporated

over operating temperature range (unless otherwise noted)

		MIN	NOM	MAX	UNIT
T_J	Operating junction temperature	–40		150	°C

(1) Current flowing through boot diode (D_{BOOT}) needs to be limited for C_{BOOT} > 1µF

7.4 Thermal Information

THERMAL METRIC[1]		DRV8300		UNIT
		PW (TSSOP)	RGE (VQFN)	
		20 PINS	24 PINS	
$R_{\theta JA}$	Junction-to-ambient thermal resistance	97.4	49.3	°C/W
$R_{\theta JC(top)}$	Junction-to-case (top) thermal resistance	38.3	42.5	°C/W
$R_{\theta JB}$	Junction-to-board thermal resistance	48.8	26.5	°C/W
Ψ_{JT}	Junction-to-top characterization parameter	4.3	2.2	°C/W
Ψ_{JB}	Junction-to-board characterization parameter	48.4	26.4	°C/W
$R_{\theta JC(bot)}$	Junction-to-case (bottom) thermal resistance	N/A	11.5	°C/W

(1) For more information about traditional and new thermal metrics, see the Semiconductor and IC Package Thermal Metrics application report.

7.5 Electrical Characteristics

4.8 V ≤ V_{GVDD} ≤ 20 V, –40°C ≤ T_J ≤ 150°C (unless otherwise noted)

PARAMETER		TEST CONDITIONS	MIN	TYP	MAX	UNIT
POWER SUPPLIES (GVDD, BSTx)						
I_{GVDD}	GVDD standby mode current	INHx = INLX = 0; V_{BSTx} = V_{GVDD}	400	800	1400	µA
	GVDD active mode current	INHx = INLX = Switching @20kHz; V_{BSTx} = V_{GVDD}; NO FETs connected	400	825	1400	µA
IL_{BSx}	Bootstrap pin leakage current	V_{BSTx} = V_{SHx} = 85V; V_{GVDD} = 0V	2	4	7	µA
IL_{BS_TRAN}	Bootstrap pin active mode transient leakage current	INHx = Switching@20kHz	30	105	220	µA
IL_{BS_DC}	Bootstrap pin active mode leakage static current	INHx = High	30	85	150	µA
IL_{SHx}	High-side source pin leakage current	INHx = INLX = 0; V_{BSTx} - V_{SHx} = 12V; V_{SHx} = 0 to 85V	30	55	80	µA
LOGIC-LEVEL INPUTS (INHx, INLx, MODE)						
V_{IL_MODE}	Input logic low voltage	Mode pin			0.6	V
V_{IL}	Input logic low voltage	INLx, INHx pins			0.8	V
V_{IH_MODE}	Input logic high voltage	Mode pin	3.7			V
V_{IH}	Input logic high voltage	INLx, INHx pins	2.0			V
V_{HYS_MODE}	Input hysteresis	Mode pin	1600	2000	2400	mV
V_{HYS}	Input hysteresis	INLx, INHx pins	40	100	260	mV
I_{IL_INLx}	INLx Input logic low current	V_{PIN} (Pin Voltage) = 0 V; INLx in non-inverting mode	-1	0	1	µA
		V_{PIN} (Pin Voltage) = 0 V; INLx in inverting mode	5	20	30	µA
I_{IH_INLx}	INLx Input logic high current	V_{PIN} (Pin Voltage) = 5 V; INLx in non-inverting mode	5	20	30	µA
		V_{PIN} (Pin Voltage) = 5 V; INLx in inverting mode	0	0.5	1.5	µA
I_{IL}	INHx, MODE Input logic low current	V_{PIN} (Pin Voltage) = 0 V;	-1	0	1	µA
I_{IH}	INHx, MODE Input logic high current	V_{PIN} (Pin Voltage) = 5 V;	5	20	30	µA
R_{PD_INHx}	INHx Input pulldown resistance	To GND	120	200	280	kΩ

Copyright © 2022 Texas Instruments Incorporated

4.8 V ≤ V_{GVDD} ≤ 20 V, –40°C ≤ T_J ≤ 150°C (unless otherwise noted)

PARAMETER		TEST CONDITIONS	MIN	TYP	MAX	UNIT
R_{PD_INLx}	INLx Input pulldown resistance	To GND, INLx in non-inverting mode	120	200	280	kΩ
R_{PU_INLx}	INLx Input pullup resistance	To INT_5V, INLx in inverting mode	120	200	280	kΩ
R_{PD_MODE}	MODE Input pulldown resistance	To GND	120	200	280	kΩ
GATE DRIVERS (GHx, GLx, SHx, SLx)						
V_{GHx_LO}	High-side gate drive low level voltage	I_{GLx} = -100 mA; V_{GVDD} = 12V; No FETs connected	0	0.15	0.35	V
V_{GHx_HI}	High-side gate drive high level voltage (V_{BSTx} - V_{GHx})	I_{GHx} = 100 mA; V_{GVDD} = 12V; No FETs connected	0.3	0.6	1.2	V
V_{GLx_LO}	Low-side gate drive low level voltage	I_{GLx} = -100 mA; V_{GVDD} = 12V; No FETs connected	0	0.15	0.35	V
V_{GLx_HI}	Low-side gate drive high level voltage (V_{GVDD} - V_{GHx})	I_{GHx} = 100 mA; V_{GVDD} = 12V; No FETs connected	0.3	0.6	1.2	V
I_{DRIVEP_HS}	High-side peak source gate current	GHx-SHx = 12V	400	750	1200	mA
I_{DRIVEN_HS}	High-side peak sink gate current	GHx-SHx = 0V	850	1500	2100	mA
I_{DRIVEP_LS}	Low-side peak source gate current	GLx = 12V	400	750	1200	mA
I_{DRIVEN_LS}	Low-side peak sink gate current	GLx = 0V	850	1500	2100	mA
t_{PD}	Input to output propagation delay	INHx, INLx to GHx, GLx; V_{GVDD} = V_{BSTx} - V_{SHx} > 8V; SHx = 0V, No load on GHx and GLx	70	125	180	ns
t_{PD_match}	Matching propagation delay per phase	GHx turning OFF to GLx turning ON, GLx turning OFF to GHx turning ON; V_{GVDD} = V_{BSTx} - V_{SHx} > 8V; SHx = 0V, No load on GHx and GLx	-30	±4	30	ns
t_{PD_match}	Matching propagation delay phase to phase	GHx/GLx turning ON to GHy/GLy turning ON, GHx/GLx turning OFF to GHy/GLy turning OFF; V_{GVDD} = V_{BSTx} - V_{SHx} > 8V; SHx = 0V, No load on GHx and GLx	-30	±4	30	ns
t_{R_GLx}	GLx rise time (10% to 90%)	C_{LOAD} = 1000 pF; V_{GVDD} = V_{BSTx} - V_{SHx} > 8V; SHx = 0V	10	24	50	ns
t_{R_GHx}	GHx rise time (10% to 90%)	C_{LOAD} = 1000 pF; V_{GVDD} = V_{BSTx} - V_{SHx} > 8V; SHx = 0V	10	24	50	ns
t_{F_GLx}	GLx fall time (90% to 10%)	C_{LOAD} = 1000 pF; V_{GVDD} = V_{BSTx} - V_{SHx} > 8V; SHx = 0V	5	12	30	ns
t_{F_GHx}	GHx fall time (90% to 10%)	C_{LOAD} = 1000 pF; V_{GVDD} = V_{BSTx} - V_{SHx} > 8V; SHx = 0V	5	12	30	ns
t_{DEAD}	Gate drive dead time	DT pin floating	150	215	280	ns
		DT pin connected to GND	150	215	280	ns
		40 kΩ between DT pin and GND	150	200	260	ns
		400 kΩ between DT pin and GND	1500	2000	2600	ns
t_{PW_MIN}	Minimum input pulse width on INHx, INLx that changes the output on GHx, GLx		40	70	150	ns
BOOTSTRAP DIODES (DRV8300D, DRV8300DI)						
V_{BOOTD}	Bootstrap diode forward voltage	I_{BOOT} = 100 µA	0.45	0.7	0.85	V
		I_{BOOT} = 100 mA	2	2.3	3.1	V
R_{BOOTD}	Bootstrap dynamic resistance ($\Delta V_{BOOTD}/\Delta I_{BOOT}$)	I_{BOOT} = 100 mA and 80 mA	11	15	25	Ω
PROTECTION CIRCUITS						
V_{GVDDUV}	Gate Driver Supply undervoltage lockout (GVDDUV)	Supply rising	4.45	4.6	4.7	V
		Supply falling	4.2	4.35	4.4	V
V_{GVDDUV_HYS}	Gate Driver Supply UV hysteresis	Rising to falling threshold	250	280	310	mV

Copyright © 2022 Texas Instruments Incorporated

4.8 V ≤ V_{GVDD} ≤ 20 V, –40°C ≤ T_J ≤ 150°C (unless otherwise noted)

PARAMETER		TEST CONDITIONS	MIN	TYP	MAX	UNIT
t_{GVDDUV}	Gate Driver Supply undervoltage deglitch time		5	10	13	µs
V_{BSTUV}	Boot Strap undervoltage lockout (V_{BSTx} - V_{SHx})	Supply rising	3.6	4.2	4.8	V
	Boot Strap undervoltage lockout (V_{BSTx} - V_{SHx})	Supply falling	3.5	4	4.5	V
V_{BSTUV_HYS}	Bootstrap UV hysteresis	Rising to falling threshold		200		mV
t_{BSTUV}	Bootstrap undervoltage deglitch time		6	10	22	µs

7.6 Timing Diagrams

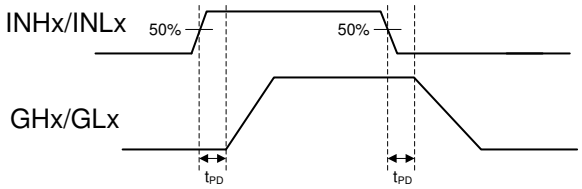

Figure 7-1. Propagation Delay(t_{PD})

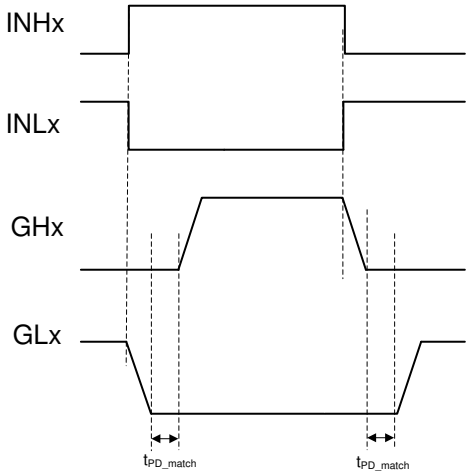

Figure 7-2. Propagation Delay Match (t_{PD_match})

7.7 Typical Characteristics

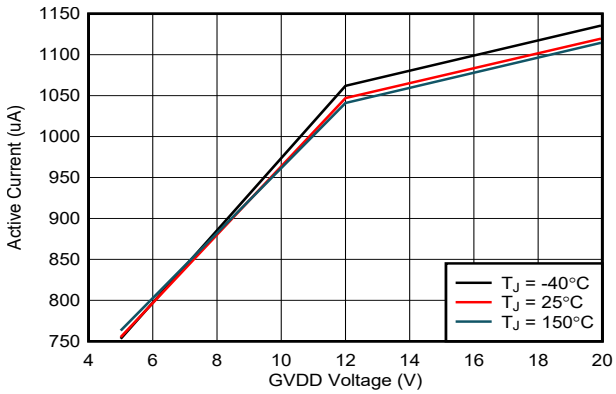

Figure 7-3. Supply Current Over GVDD Voltage

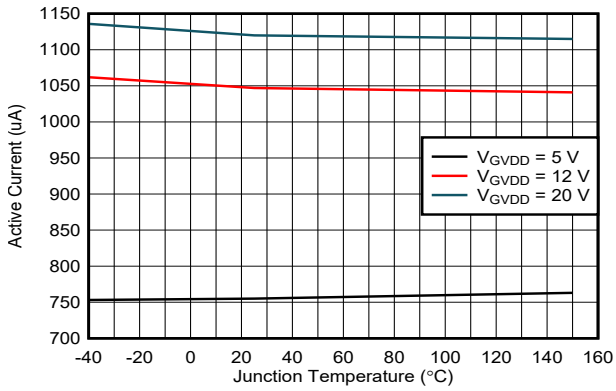

Figure 7-4. Supply Current Over Temperature

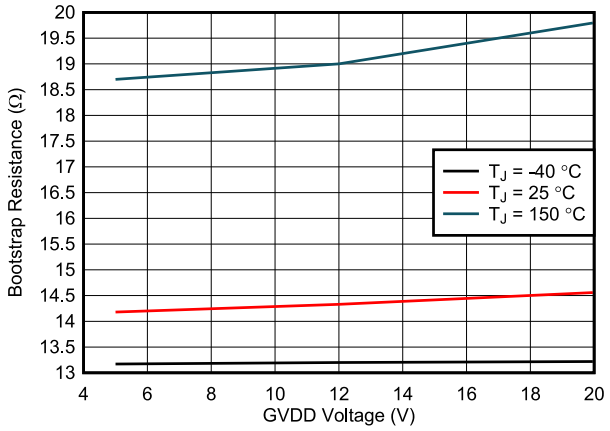

Figure 7-5. Bootstrap Resistance Over GVDD Voltage

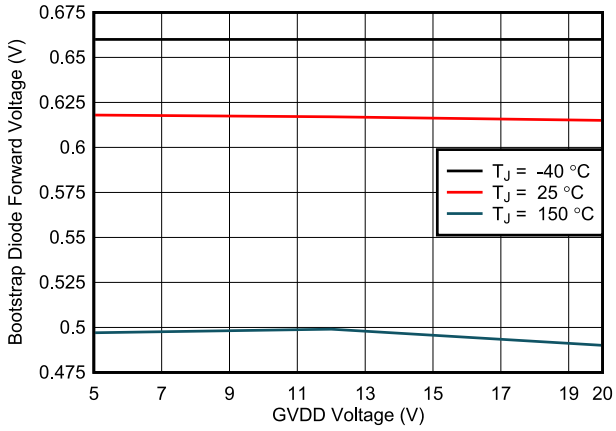

Figure 7-6. Bootstrap Diode Forward Voltage over GVDD Voltage

Copyright © 2022 Texas Instruments Incorporated

8 Detailed Description

8.1 Overview

The DRV8300 family of devices is a gate driver for three-phase motor drive applications. These devices decrease system component count, saves PCB space and cost by integrating three independent half-bridge gate drivers and optional bootstrap diodes.

DRV8300 supports external N-channel high-side and low-side power MOSFETs and can drive 750-mA source, 1.5-A sink peak currents with total combined 30-mA average output current. The DRV8300 family of devices are available in 0.5-mm pitch QFN and 0.65-mm pitch TSSOP surface-mount packages. The QFN size is 4 × 4 mm (0.5-mm pin pitch) for the 24-pin package, and TSSOP body size is 6.5 × 4.4 mm (0.65-mm pin pitch) for the 20-pin package.

Copyright © 2022 Texas Instruments Incorporated

8.2 Functional Block Diagram

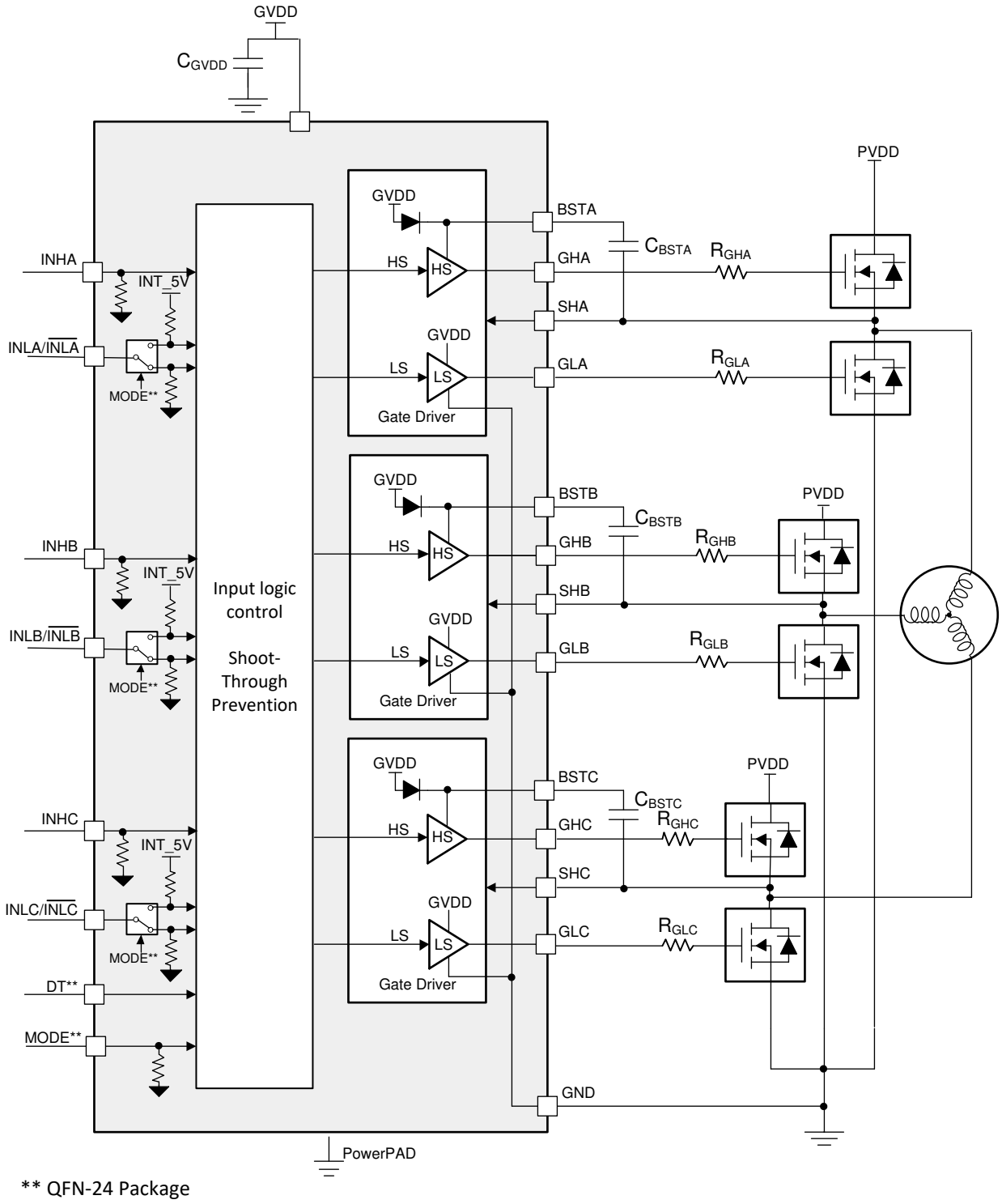

Figure 8-1. Block Diagram for DRV8300D

Copyright © 2022 Texas Instruments Incorporated

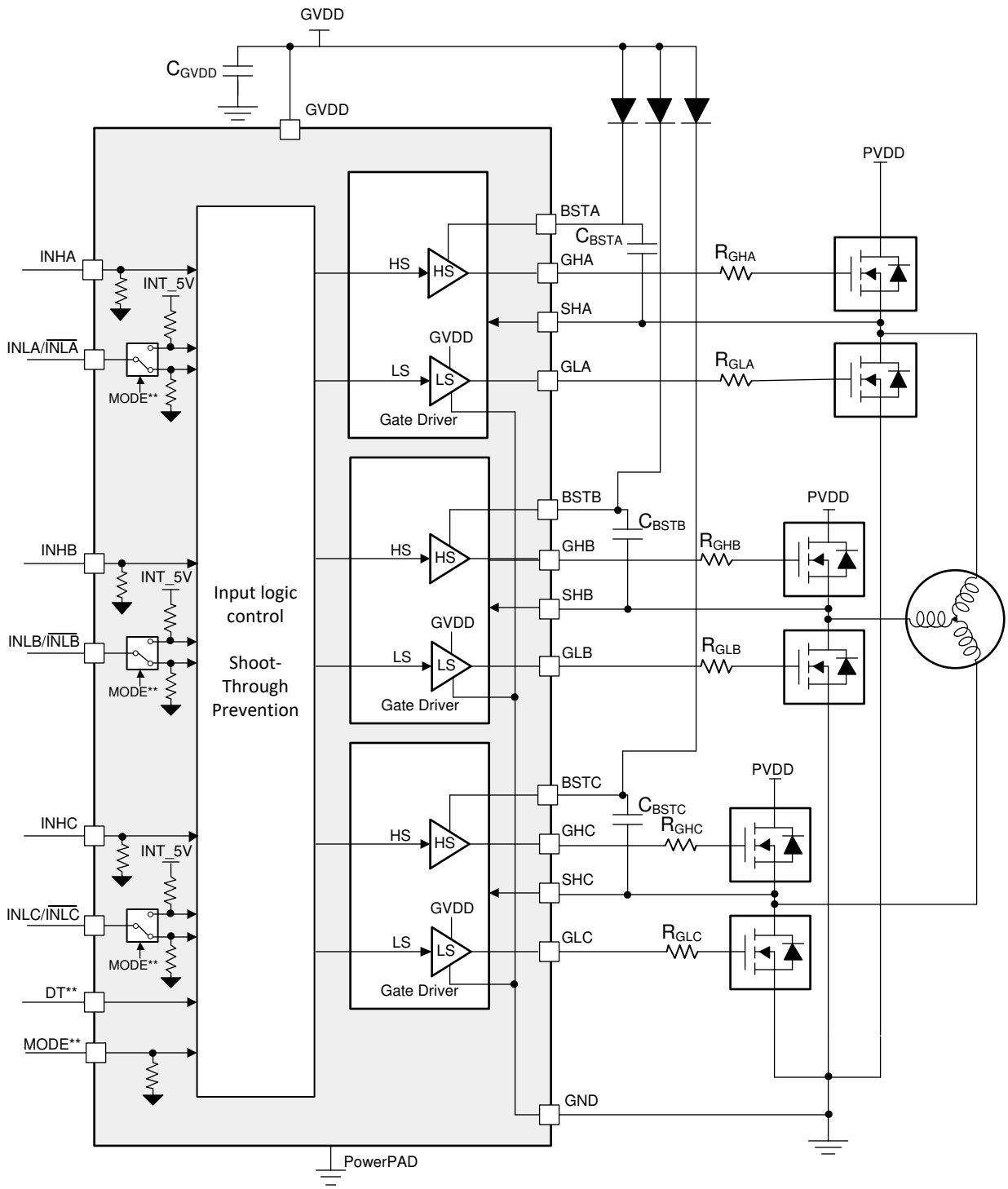

** QFN-24 Package

Figure 8-2. Block Diagram for DRV8300N

8.3 Feature Description

8.3.1 Three BLDC Gate Drivers

The DRV8300 integrates three half-bridge gate drivers, each capable of driving high-side and low-side N-channel power MOSFETs. Input on GVDD provides the gate bias voltage for the low-side MOSFETs. The high voltage is generated using bootstrap capacitor and GVDD supply. The half-bridge gate drivers can be used in combination to drive a three-phase motor or separately to drive other types of loads.

8.3.1.1 Gate Drive Timings

8.3.1.1.1 Propagation Delay

The propagation delay time (t_{pd}) is measured as the time between an input logic edge to a detected output change. This time has two parts consisting of the input deglitcher delay and the delay through the analog gate drivers.

The input deglitcher prevents high-frequency noise on the input pins from affecting the output state of the gate drivers. The analog gate drivers have a small delay that contributes to the overall propagation delay of the device.

8.3.1.1.2 Deadtime and Cross-Conduction Prevention

In the DRV8300, high-side and low-side inputs operate independently, with an exception to prevent cross conduction when high and low side are turned ON at same time. The DRV8300 turns OFF high-side and low-side output to prevent shoot through when the both high-side and low-side inputs are at logic HIGH at same time.

The DRV8300 also provides option to insert additional deadtime to prevent the external high-side and low-side MOSFET from switching on at the same time. In the devices with DT pin (QFN package), deadtime can be linearly adjusted between 200 ns to 2000 ns by configuring resistor value between DT and GND. When the DT pin is left floating, fixed deadtime of 200 nS (typical value) is inserted. The value of resistor can be calculated using Equation 1.

$$R_{DT}\,(k\Omega) = \frac{Deadtime\ (nS)}{5} \tag{1}$$

In the devices without DT pin (TSSOP package), fixed deadtime of 200 ns (typical value) is inserted to prevent high and low side gate output turning ON at same time.

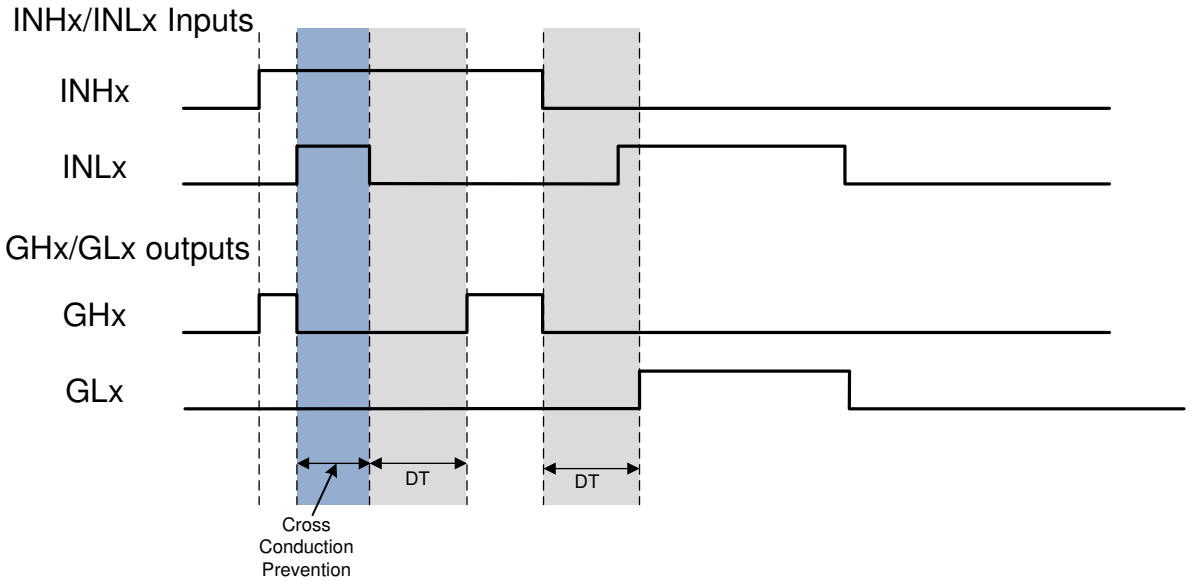

Figure 8-3. Cross Conduction Prevention and Deadtime Insertion

Copyright © 2022 Texas Instruments Incorporated

8.3.1.2 Mode (Inverting and non inverting INLx)

The DRV8300 has flexibility of accepting different kind of inputs on INLx. In the devices with MODE pin (QFN package), the DRV8300 provides option of configuring the GLx outputs to be inverted or non-inverted compared to polarity of signal on INLx pins. When the MODE pin is left floating, the INLx is configured to be in non-inverting mode and GLx output is in phase with respect to INLx (see Figure 8-4), whereas when the MODE pin is connected to GVDD, GLx output is out of phase with respect to INLx (see Figure 8-5). In devices without MODE pin (TSSOP package device), there are different device option available for inverting and non inverting inputs (see Section 5).

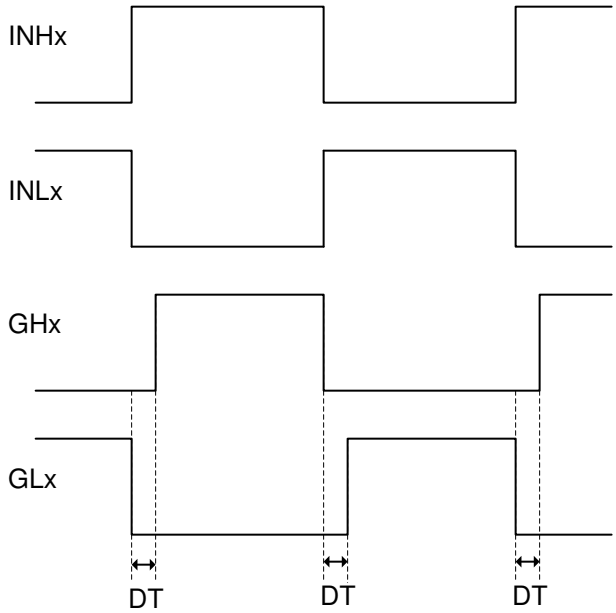

Figure 8-4. Non-Inverted INLx inputs

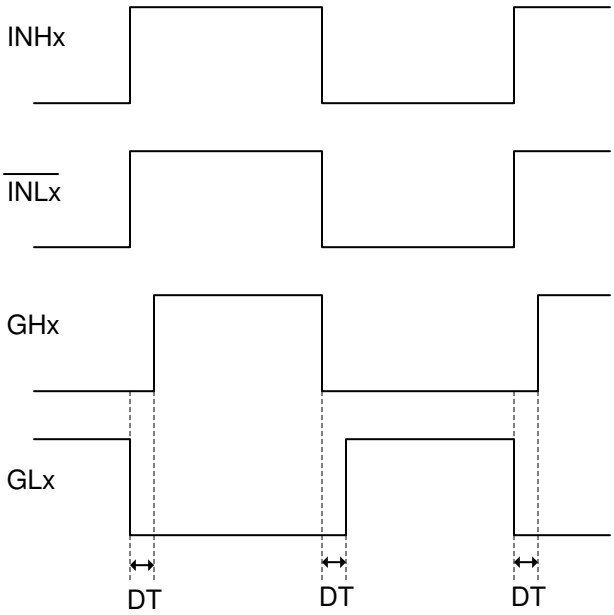

Figure 8-5. Inverted INLx inputs

8.3.2 Pin Diagrams

Figure 8-6 shows the input structure for the logic level pins INHx, INLx. INHx and non-inverted INLx has passive pull down, so when inputs are floating the output the gate driver will be pulled low. Figure 8-7 shows the input structure for the inverted INLx pins. The inverted INLx has passive pull up, so when inputs are floating the output of the low-side gate driver will be pulled low.

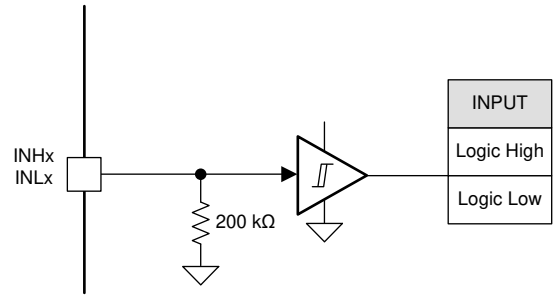

Figure 8-6. INHx and non-inverted INLx Logic-Level Input Pin Structure

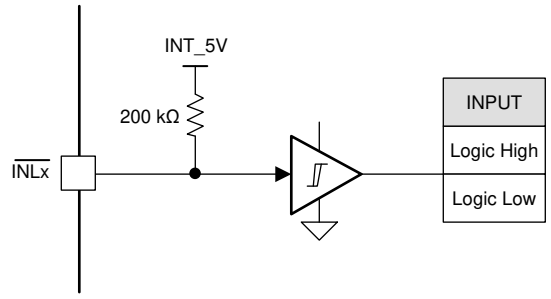

Figure 8-7. Inverted INLx Logic-Level Input Pin Structure

8.3.3 Gate Driver Protective Circuits

The DRV8300 is protected against BSTx undervoltage and GVDD undervoltage events.

Table 8-1. Fault Action and Response

FAULT	CONDITION	GATE DRIVER	RECOVERY
V_{BSTx} undervoltage (BSTUV)	$V_{BSTx} < V_{BSTUV}$	GHx - Hi-Z	Automatic: $V_{BSTx} > V_{BSTUV}$ and low to high PWM edge detected on INHx pin
GVDD undervoltage (GVDDUV)	$V_{GVDD} < V_{GVDDUV}$	Hi-Z	Automatic: $V_{GVDD} > V_{GVDDUV}$

8.3.3.1 V_{BSTx} Undervoltage Lockout (BSTUV)

The DRV8300 has separate voltage comparator to detect undervoltage condition for each phases. If at any time the voltage on the BSTx pin falls lower than the V_{BSTUV} threshold, high side external MOSFETs of that particular phase is disabled by disabling (Hi-Z) GHx pin. Normal operation starts again when the BSTUV condition clears and low to high PWM edge is detected on INHx input of the same phase that BSTUV condition was detected. BSTUV protection ensures that high-side MOSFETs are not driven when the BSTx pins has lower value.

8.3.3.2 GVDD Undervoltage Lockout (GVDDUV)

If at any time the voltage on the GVDD pin falls lower than the V_{GVDDUV} threshold voltage, all of the external MOSFETs are disabled. Normal operation starts again when the GVDDUV condition clears. GVDDUV protection ensures that external MOSFETs are not driven when the GVDD input is at lower value.

8.4 Device Functional Modes

The DRV8300 is in operating (active) mode, whenever the GVDD and BST pins are higher than the UV threshold (GVDD > $V_{GVDDUV}$and V_{BSTX} > V_{BSTUV}). In active mode, the gate driver output GHx and GLX will follow respective inputs INHx and INLx.

Copyright © 2022 Texas Instruments Incorporated

9 Application and Implementation

Note

Information in the following applications sections is not part of the TI component specification, and TI does not warrant its accuracy or completeness. TI's customers are responsible for determining suitability of components for their purposes. Customers should validate and test their design implementation to confirm system functionality.

9.1 Application Information

The DRV8300 family of devices is primarily used in applications for three-phase brushless DC motor control. The design procedures in the *Section 9.2* section highlight how to use and configure the DRV8300.

9.2 Typical Application

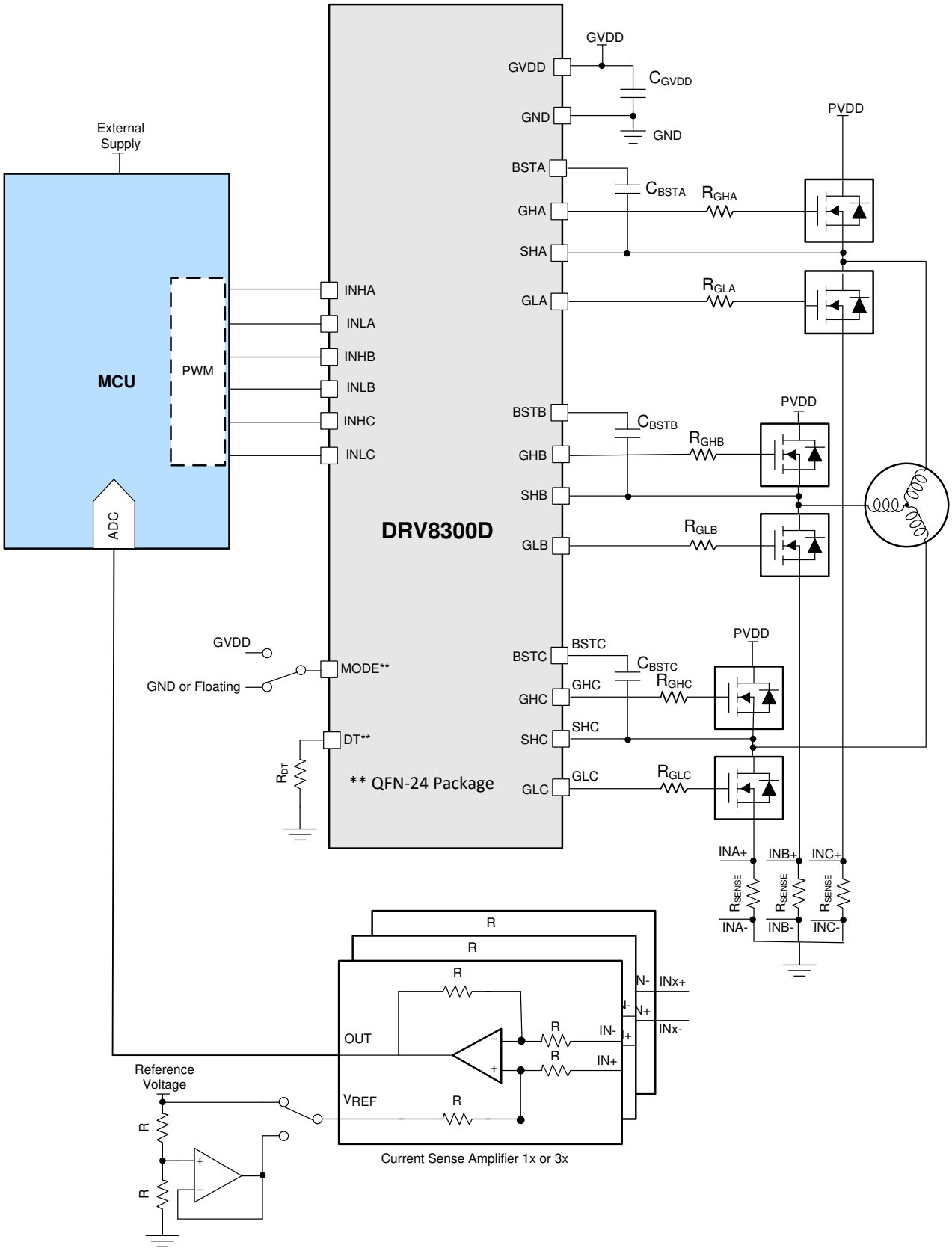

Figure 9-1. Application Schematic

Copyright © 2022 Texas Instruments Incorporated

9.2.1 Design Requirements

Table 9-1 lists the example design input parameters for system design.

Table 9-1. Design Parameters

EXAMPLE DESIGN PARAMETER	REFERENCE	EXAMPLE VALUE
MOSFET	-	CSD19532Q5B
Gate Supply Voltage	V_{GVDD}	12 V
Gate Charge	Q_G	48 nC

9.2.2 Bootstrap Capacitor and GVDD Capacitor Selection

The bootstrap capacitor must be sized to maintain the bootstrap voltage above the undervoltage lockout for normal operation. Equation 2 calculates the maximum allowable voltage drop across the bootstrap capacitor:

$$\Delta V_{BSTX} = V_{GVDD} - V_{BOOTD} - V_{BSTUV} \tag{2}$$

=12 V – 0.85 V – 4.5 V = 6.65 V

where

- V_{GVDD} is the supply voltage of the gate drive
- V_{BOOTD} is the forward voltage drop of the bootstrap diode
- V_{BSTUV} is the threshold of the bootstrap undervoltage lockout

In this example the allowed voltage drop across bootstrap capacitor is 6.65 V. It is generally recommended that ripple voltage on both the bootstrap capacitor and GVDD capacitor should be minimized as much as possible. Many of commercial, industrial, and automotive applications use ripple value between 0.5 V to 1 V.

The total charge needed per switching cycle can be estimated with Equation 3:

$$Q_{TOT} = Q_G + \frac{IL_{BS_TRANS}}{f_{SW}} \tag{3}$$

=48 nC + 220 µA/20 kHz = 50 nC + 11 nC = 59 nC

where

- Q_G is the total MOSFET gate charge
- I_{LBS_TRAN} is the bootstrap pin leakage current
- f_{SW} is the is the PWM frequency

The minimum bootstrap capacitor an then be estimated as below assuming 1V ΔV_{BSTx}:

$$C_{BST_MIN} = {Q_{TOT}}/{\Delta V_{BSTX}} \tag{4}$$

= 59 nC / 1 V = 59 nF

The calculated value of minimum bootstrap capacitor is 59 nF. It should be noted that, this value of capacitance is needed at full bias voltage. In practice, the value of the bootstrap capacitor must be greater than calculated value to allow for situations where the power stage may skip pulse due to various transient conditions. It is recommended to use a 100 nF bootstrap capacitor in this example. It is also recommenced to include enough margin and place the bootstrap capacitor as close to the BSTx and SHx pins as possible.

$$C_{GVDD} \geq 10 \times C_{BSTX} \tag{5}$$

= 10*100 nF= 1 µF

For this example application choose 1 µF C_{GVDD} capacitor. Choose a capacitor with a voltage rating at least twice the maximum voltage that it will be exposed to because most ceramic capacitors lose significant capacitance when biased. This value also improves the long term reliability of the system.

9.2.3 Application Curves

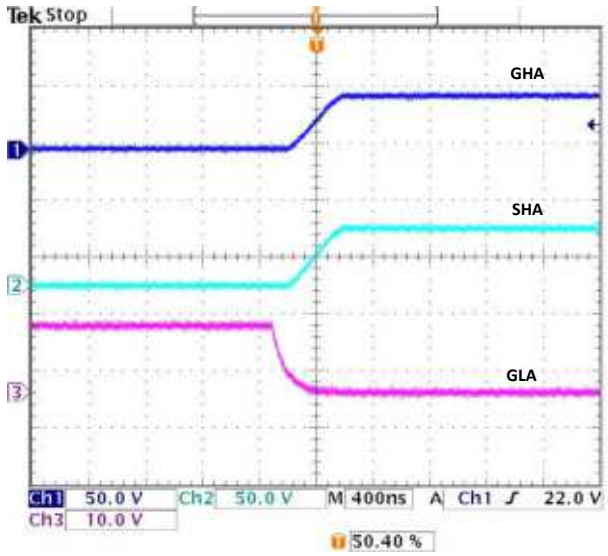

Figure 9-2. Gate voltages, SHx rising with 15 ohm gate resistor and CSD19532Q5B MOSFET

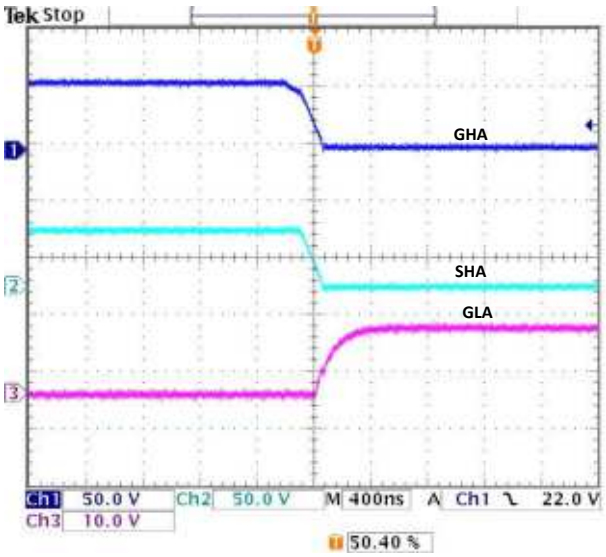

Figure 9-3. Gate voltages, SHx falling with 15 ohm gate resistor and CSD19532Q5B MOSFET

Copyright © 2022 Texas Instruments Incorporated

10 Power Supply Recommendations

The DRV8300 is designed to operate from an input voltage supply (GVDD) range from 4.8 V to 20 V. A local bypass capacitor should be placed between the GVDD and GND pins. This capacitor should be located as close to the device as possible. A low ESR, ceramic surface mount capacitor is recommended. It is recommended to use two capacitors across GVDD and GND: a low capacitance ceramic surface-mount capacitor for high frequency filtering placed very close to GVDD and GND pin, and another high capacitance value surfacemount capacitor for device bias requirements. In a similar manner, the current pulses delivered by the GHx pins are sourced from the BSTx pins. Therefore, capacitor across the BSTx to SHx is recommended, it should be high enough capacitance value capacitor to deliver GHx pulses

Copyright © 2022 Texas Instruments Incorporated

11 Layout

11.1 Layout Guidelines

- Low ESR/ESL capacitors must be connected close to the device between GVDD and GND and between BSTx and SHx pins to support high peak currents drawn from GVDD and BSTx pins during the turn-on of the external MOSFETs.
- To prevent large voltage transients at the drain of the top MOSFET, a low ESR electrolytic capacitor and a good quality ceramic capacitor must be connected between the high side MOSFET drain and ground.
- In order to avoid large negative transients on the switch node (SHx) pin, the parasitic inductances between the source of the high-side MOSFET and the source of the low-side MOSFET must be minimized.
- In order to avoid unexpected transients, the parasitic inductance of the GHx, SHx, and GLx connections must be minimized. Minimize the trace length and number of vias wherever possible. Minimum 10 mil and typical 15 mil trace width is recommended.
- Resistance between DT and GND must be place as close as possible to device
- Place the gate driver as close to the MOSFETs as possible. Confine the high peak currents that charge and discharge the MOSFET gates to a minimal physical area by reducing trace length. This confinement decreases the loop inductance and minimize noise issues on the gate terminals of the MOSFETs.
- In QFN package device variants, NC pins can be connected to GND to increase ground conenction between thermal pad and external ground plane.
- Refer to sections *General Routing Techniques and MOSFET Placement and Power Stage Routing* in Application Report

11.2 Layout Example

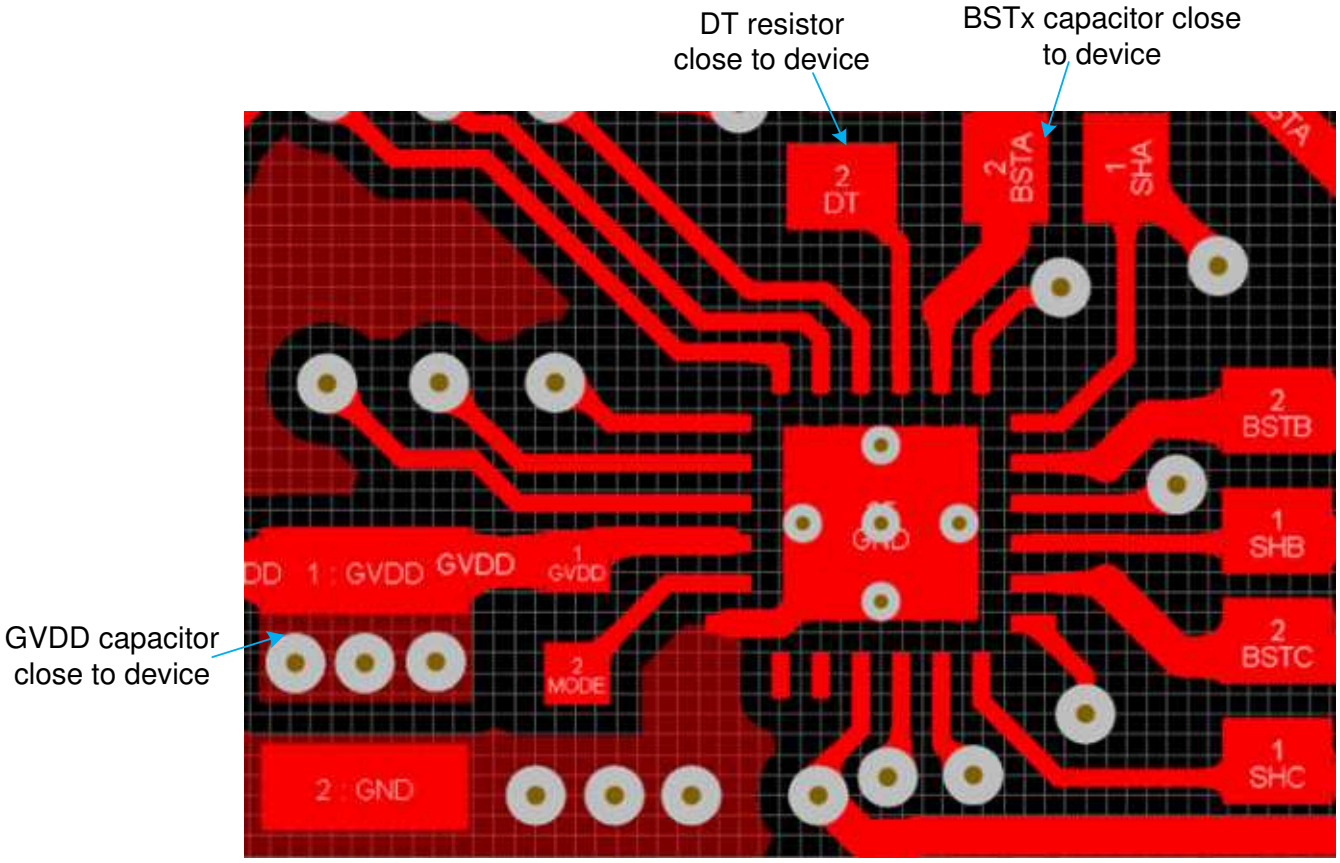

Copyright © 2022 Texas Instruments Incorporated

12 Device and Documentation Support

12.1 Receiving Notification of Documentation Updates

To receive notification of documentation updates, navigate to the device product folder on ti.com. Click on *Subscribe to updates* to register and receive a weekly digest of any product information that has changed. For change details, review the revision history included in any revised document.

12.2 Support Resources

TI E2E™ support forums are an engineer's go-to source for fast, verified answers and design help — straight from the experts. Search existing answers or ask your own question to get the quick design help you need.

Linked content is provided "AS IS" by the respective contributors. They do not constitute TI specifications and do not necessarily reflect TI's views; see TI's Terms of Use.

12.3 Trademarks

TI E2E™ is a trademark of Texas Instruments.
All trademarks are the property of their respective owners.

12.4 Electrostatic Discharge Caution

This integrated circuit can be damaged by ESD. Texas Instruments recommends that all integrated circuits be handled with appropriate precautions. Failure to observe proper handling and installation procedures can cause damage.

ESD damage can range from subtle performance degradation to complete device failure. Precision integrated circuits may be more susceptible to damage because very small parametric changes could cause the device not to meet its published specifications.

12.5 Glossary

TI Glossary	This glossary lists and explains terms, acronyms, and definitions.

13 Mechanical, Packaging, and Orderable Information

The following pages include mechanical, packaging, and orderable information. This information is the most current data available for the designated devices. This data is subject to change without notice and revision of this document. For browser-based versions of this data sheet, refer to the left-hand navigation.

PACKAGING INFORMATION

Orderable part number	Status (1)	Material type (2)	Package | Pins	Package qty | Carrier	RoHS (3)	Lead finish/ Ball material (4)	MSL rating/ Peak reflow (5)	Op temp (°C)	Part marking (6)
DRV8300DIPWR	Active	Production	TSSOP (PW) | 20	3000 | LARGE T&R	Yes	NIPDAU	Level-2-260C-1 YEAR	-40 to 125	8300DI
DRV8300DIPWR.A	Active	Production	TSSOP (PW) | 20	3000 | LARGE T&R	Yes	NIPDAU	Level-2-260C-1 YEAR	-40 to 125	8300DI
DRV8300DPWR	Active	Production	TSSOP (PW) | 20	3000 | LARGE T&R	Yes	NIPDAU	Level-2-260C-1 YEAR	-40 to 125	8300D
DRV8300DPWR.A	Active	Production	TSSOP (PW) | 20	3000 | LARGE T&R	Yes	NIPDAU	Level-2-260C-1 YEAR	-40 to 125	8300D
DRV8300DRGER	Active	Production	VQFN (RGE) | 24	3000 | LARGE T&R	Yes	NIPDAU	Level-1-260C-UNLIM	-40 to 125	8300D
DRV8300DRGER.A	Active	Production	VQFN (RGE) | 24	3000 | LARGE T&R	Yes	NIPDAU	Level-1-260C-UNLIM	-40 to 125	8300D
DRV8300NIPWR	Active	Production	TSSOP (PW) | 20	3000 | LARGE T&R	Yes	NIPDAU	Level-2-260C-1 YEAR	-40 to 125	8300NI
DRV8300NIPWR.A	Active	Production	TSSOP (PW) | 20	3000 | LARGE T&R	Yes	NIPDAU	Level-2-260C-1 YEAR	-40 to 125	8300NI
DRV8300NIPWRG4	Active	Production	TSSOP (PW) | 20	3000 | LARGE T&R	Yes	NIPDAU	Level-2-260C-1 YEAR	-40 to 125	8300NI
DRV8300NIPWRG4.A	Active	Production	TSSOP (PW) | 20	3000 | LARGE T&R	Yes	NIPDAU	Level-2-260C-1 YEAR	-40 to 125	8300NI
DRV8300NPWR	Active	Production	TSSOP (PW) | 20	3000 | LARGE T&R	Yes	NIPDAU	Level-2-260C-1 YEAR	-40 to 125	8300N
DRV8300NPWR.A	Active	Production	TSSOP (PW) | 20	3000 | LARGE T&R	Yes	NIPDAU	Level-2-260C-1 YEAR	-40 to 125	8300N
DRV8300NRGER	Active	Production	VQFN (RGE) | 24	3000 | LARGE T&R	Yes	NIPDAU	Level-1-260C-UNLIM	-40 to 125	8300N
DRV8300NRGER.A	Active	Production	VQFN (RGE) | 24	3000 | LARGE T&R	Yes	NIPDAU	Level-1-260C-UNLIM	-40 to 125	8300N

(1) **Status:** For more details on status, see our product life cycle.

(2) **Material type:** When designated, preproduction parts are prototypes/experimental devices, and are not yet approved or released for full production. Testing and final process, including without limitation quality assurance, reliability performance testing, and/or process qualification, may not yet be complete, and this item is subject to further changes or possible discontinuation. If available for ordering, purchases will be subject to an additional waiver at checkout, and are intended for early internal evaluation purposes only. These items are sold without warranties of any kind.

(3) **RoHS values:** Yes, No, RoHS Exempt. See the TI RoHS Statement for additional information and value definition.

(4) **Lead finish/Ball material:** Parts may have multiple material finish options. Finish options are separated by a vertical ruled line. Lead finish/Ball material values may wrap to two lines if the finish value exceeds the maximum column width.

(5) **MSL rating/Peak reflow:** The moisture sensitivity level ratings and peak solder (reflow) temperatures. In the event that a part has multiple moisture sensitivity ratings, only the lowest level per JEDEC standards is shown. Refer to the shipping label for the actual reflow temperature that will be used to mount the part to the printed circuit board.

(6) **Part marking:** There may be an additional marking, which relates to the logo, the lot trace code information, or the environmental category of the part.

Multiple part markings will be inside parentheses. Only one part marking contained in parentheses and separated by a "~" will appear on a part. If a line is indented then it is a continuation of the previous line and the two combined represent the entire part marking for that device.

Important Information and Disclaimer: The information provided on this page represents TI's knowledge and belief as of the date that it is provided. TI bases its knowledge and belief on information provided by third parties, and makes no representation or warranty as to the accuracy of such information. Efforts are underway to better integrate information from third parties. TI has taken and continues to take reasonable steps to provide representative and accurate information but may not have conducted destructive testing or chemical analysis on incoming materials and chemicals. TI and TI suppliers consider certain information to be proprietary, and thus CAS numbers and other limited information may not be available for release.

In no event shall TI's liability arising out of such information exceed the total purchase price of the TI part(s) at issue in this document sold by TI to Customer on an annual basis.

OTHER QUALIFIED VERSIONS OF DRV8300 :

- Automotive : DRV8300-Q1

NOTE: Qualified Version Definitions:

- Automotive - Q100 devices qualified for high-reliability automotive applications targeting zero defects

TAPE AND REEL INFORMATION

REEL DIMENSIONS

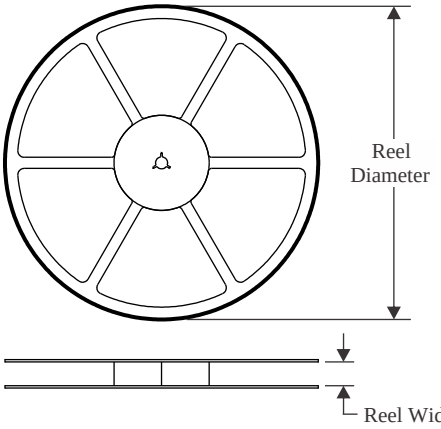

TAPE DIMENSIONS

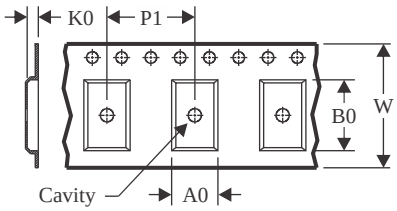

A0	Dimension designed to accommodate the component width
B0	Dimension designed to accommodate the component length
K0	Dimension designed to accommodate the component thickness
W	Overall width of the carrier tape
P1	Pitch between successive cavity centers

QUADRANT ASSIGNMENTS FOR PIN 1 ORIENTATION IN TAPE

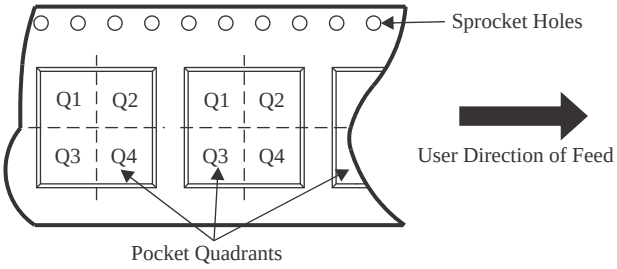

*All dimensions are nominal

Device	Package Type	Package Drawing	Pins	SPQ	Reel Diameter (mm)	Reel Width W1 (mm)	A0 (mm)	B0 (mm)	K0 (mm)	P1 (mm)	W (mm)	Pin1 Quadrant
DRV8300DIPWR	TSSOP	PW	20	3000	330.0	16.4	6.95	7.0	1.4	8.0	16.0	Q1
DRV8300DPWR	TSSOP	PW	20	3000	330.0	16.4	6.95	7.0	1.4	8.0	16.0	Q1
DRV8300DRGER	VQFN	RGE	24	3000	330.0	12.4	4.3	4.3	1.3	8.0	12.0	Q2
DRV8300NIPWR	TSSOP	PW	20	3000	330.0	16.4	6.95	7.0	1.4	8.0	16.0	Q1
DRV8300NIPWRG4	TSSOP	PW	20	3000	330.0	16.4	6.95	7.0	1.4	8.0	16.0	Q1
DRV8300NPWR	TSSOP	PW	20	3000	330.0	16.4	6.95	7.0	1.4	8.0	16.0	Q1
DRV8300NRGER	VQFN	RGE	24	3000	330.0	12.4	4.3	4.3	1.3	8.0	12.0	Q2

TAPE AND REEL BOX DIMENSIONS

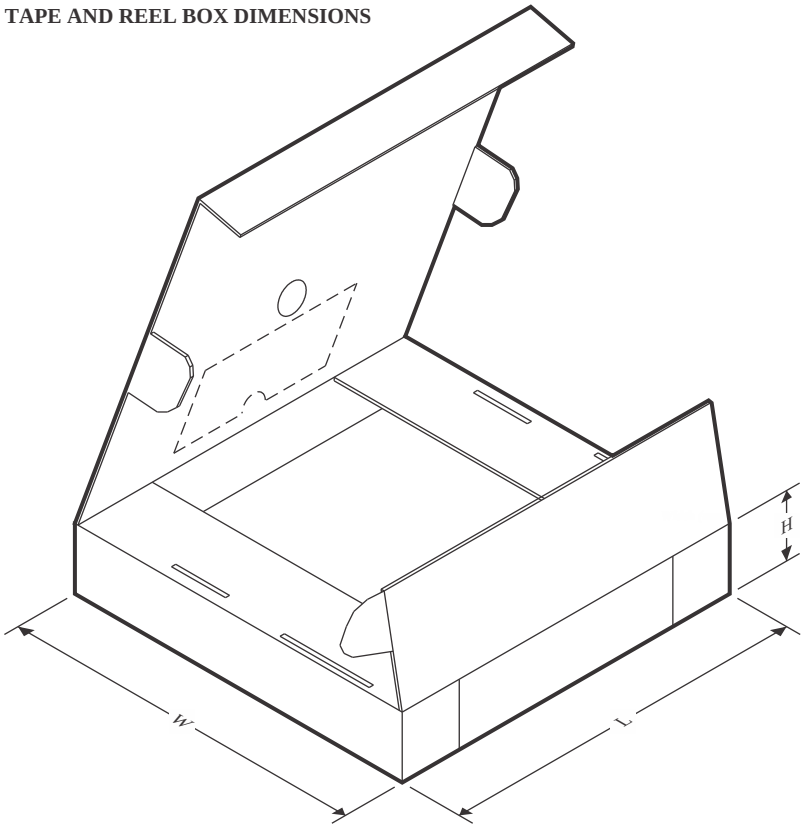

*All dimensions are nominal

Device	Package Type	Package Drawing	Pins	SPQ	Length (mm)	Width (mm)	Height (mm)
DRV8300DIPWR	TSSOP	PW	20	3000	353.0	353.0	32.0
DRV8300DPWR	TSSOP	PW	20	3000	353.0	353.0	32.0
DRV8300DRGER	VQFN	RGE	24	3000	356.0	356.0	36.0
DRV8300NIPWR	TSSOP	PW	20	3000	353.0	353.0	32.0
DRV8300NIPWRG4	TSSOP	PW	20	3000	353.0	353.0	32.0
DRV8300NPWR	TSSOP	PW	20	3000	353.0	353.0	32.0
DRV8300NRGER	VQFN	RGE	24	3000	356.0	356.0	36.0

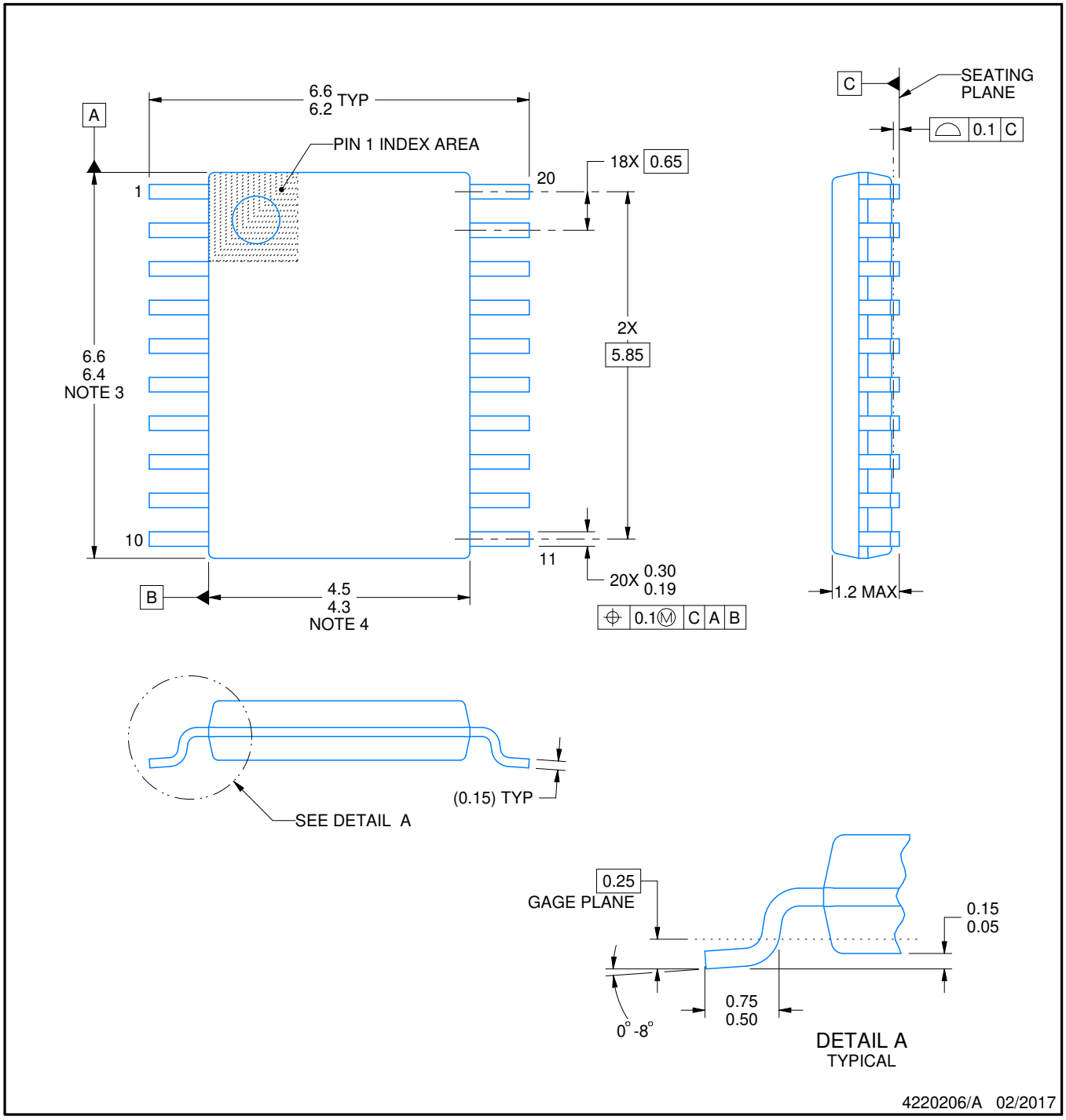

NOTES:

1. All linear dimensions are in millimeters. Any dimensions in parenthesis are for reference only. Dimensioning and tolerancing per ASME Y14.5M.
2. This drawing is subject to change without notice.
3. This dimension does not include mold flash, protrusions, or gate burrs. Mold flash, protrusions, or gate burrs shall not exceed 0.15 mm per side.
4. This dimension does not include interlead flash. Interlead flash shall not exceed 0.25 mm per side.
5. Reference JEDEC registration MO-153.

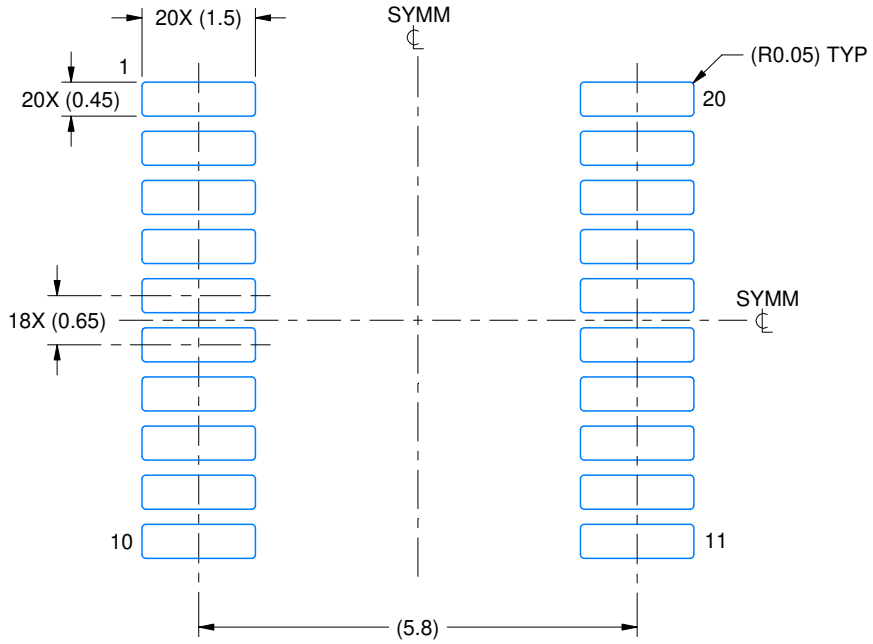

LAND PATTERN EXAMPLE
EXPOSED METAL SHOWN
SCALE: 10X

NON-SOLDER MASK DEFINED (PREFERRED)

SOLDER MASK DEFINED

SOLDER MASK DETAILS

4220206/A 02/2017

NOTES: (continued)

6. Publication IPC-7351 may have alternate designs.
7. Solder mask tolerances between and around signal pads can vary based on board fabrication site.

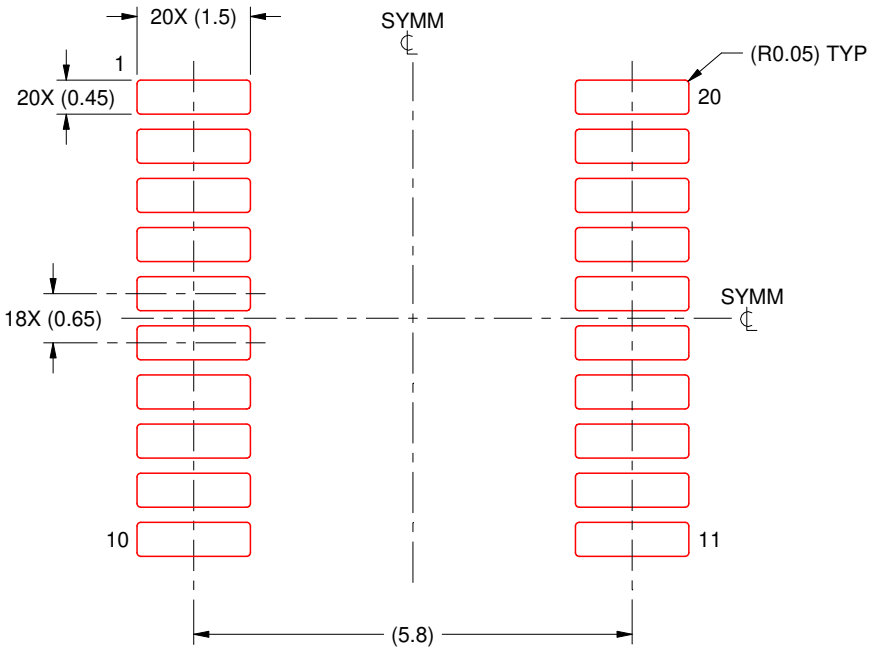

SOLDER PASTE EXAMPLE
BASED ON 0.125 mm THICK STENCIL
SCALE: 10X

4220206/A 02/2017

NOTES: (continued)

8. Laser cutting apertures with trapezoidal walls and rounded corners may offer better paste release. IPC-7525 may have alternate design recommendations.
9. Board assembly site may have different recommendations for stencil design.

RGE 24 VQFN - 1 mm max height

PLASTIC QUAD FLATPACK - NO LEAD

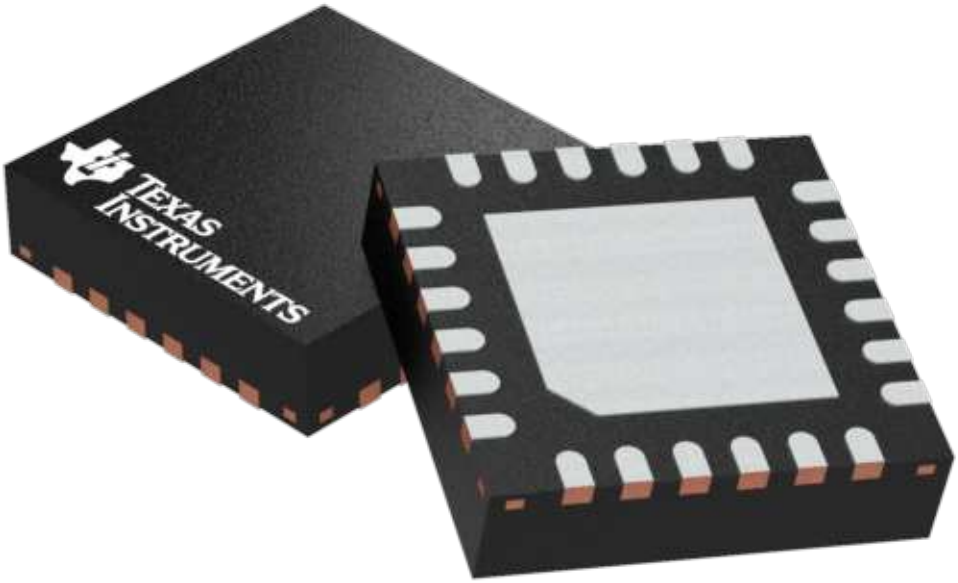

Images above are just a representation of the package family, actual package may vary.
Refer to the product data sheet for package details.

TEXAS INSTRUMENTS

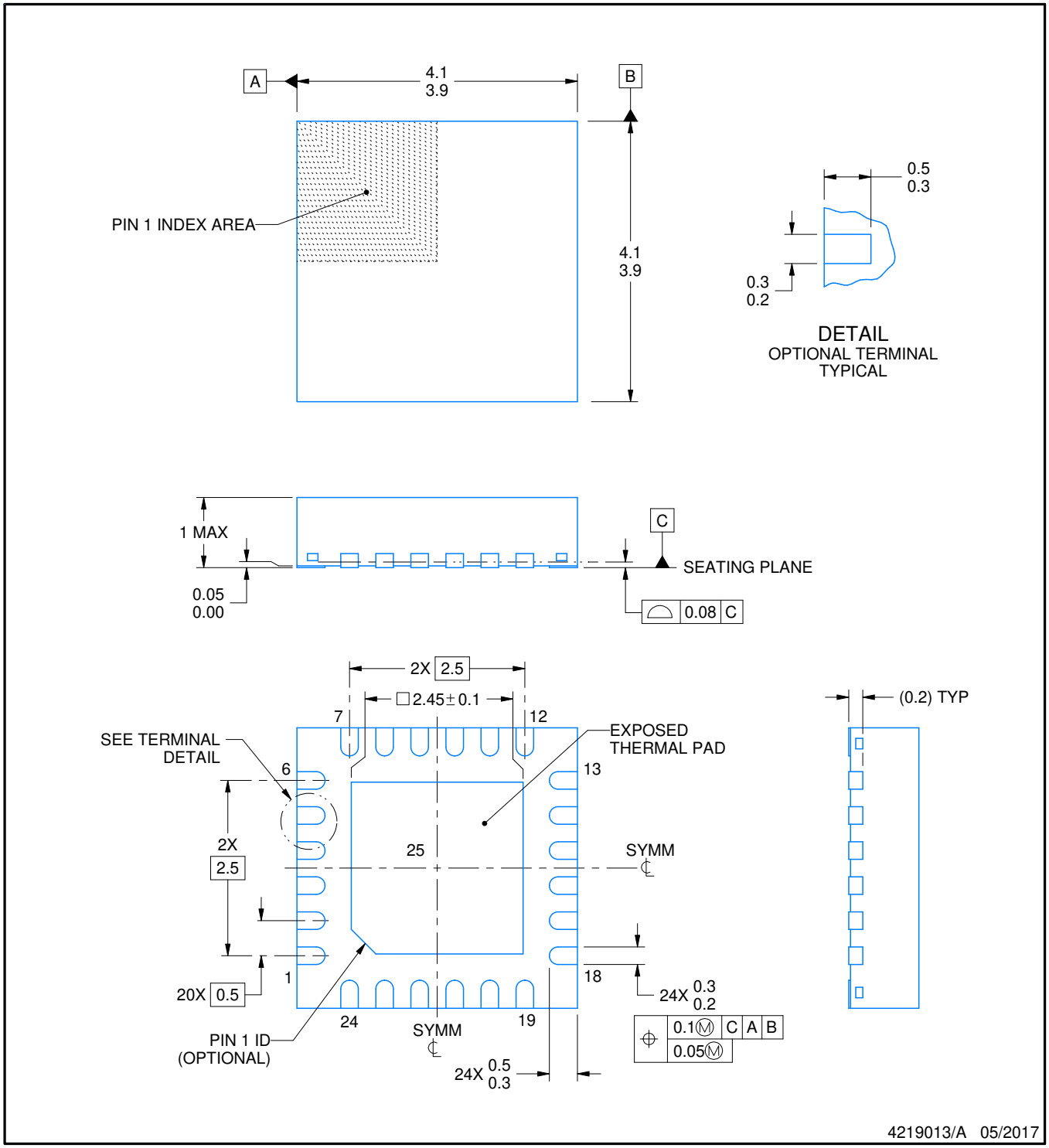

NOTES:

1. All linear dimensions are in millimeters. Any dimensions in parenthesis are for reference only. Dimensioning and tolerancing per ASME Y14.5M.
2. This drawing is subject to change without notice.
3. The package thermal pad must be soldered to the printed circuit board for thermal and mechanical performance.

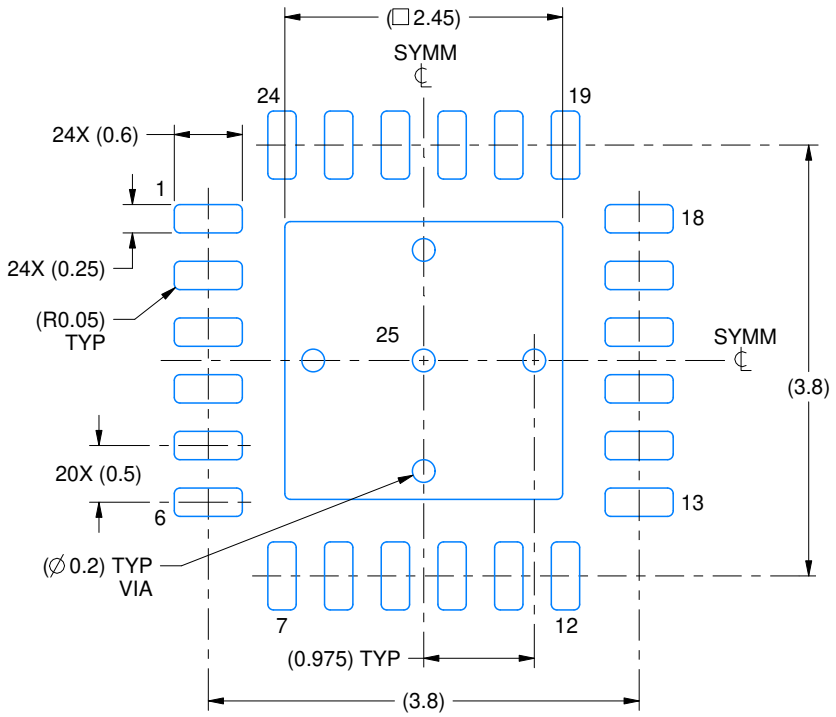

LAND PATTERN EXAMPLE
EXPOSED METAL SHOWN
SCALE:15X

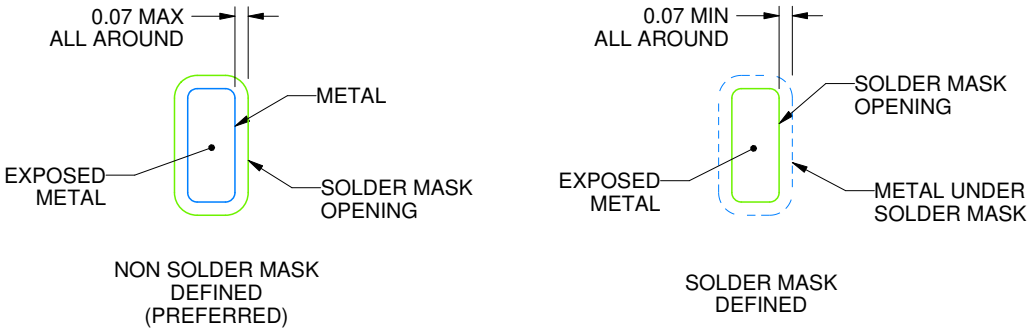

SOLDER MASK DETAILS

4219013/A 05/2017

NOTES: (continued)

4. This package is designed to be soldered to a thermal pad on the board. For more information, see Texas Instruments literature number SLUA271 (www.ti.com/lit/slua271).
5. Vias are optional depending on application, refer to device data sheet. If any vias are implemented, refer to their locations shown on this view. It is recommended that vias under paste be filled, plugged or tented.

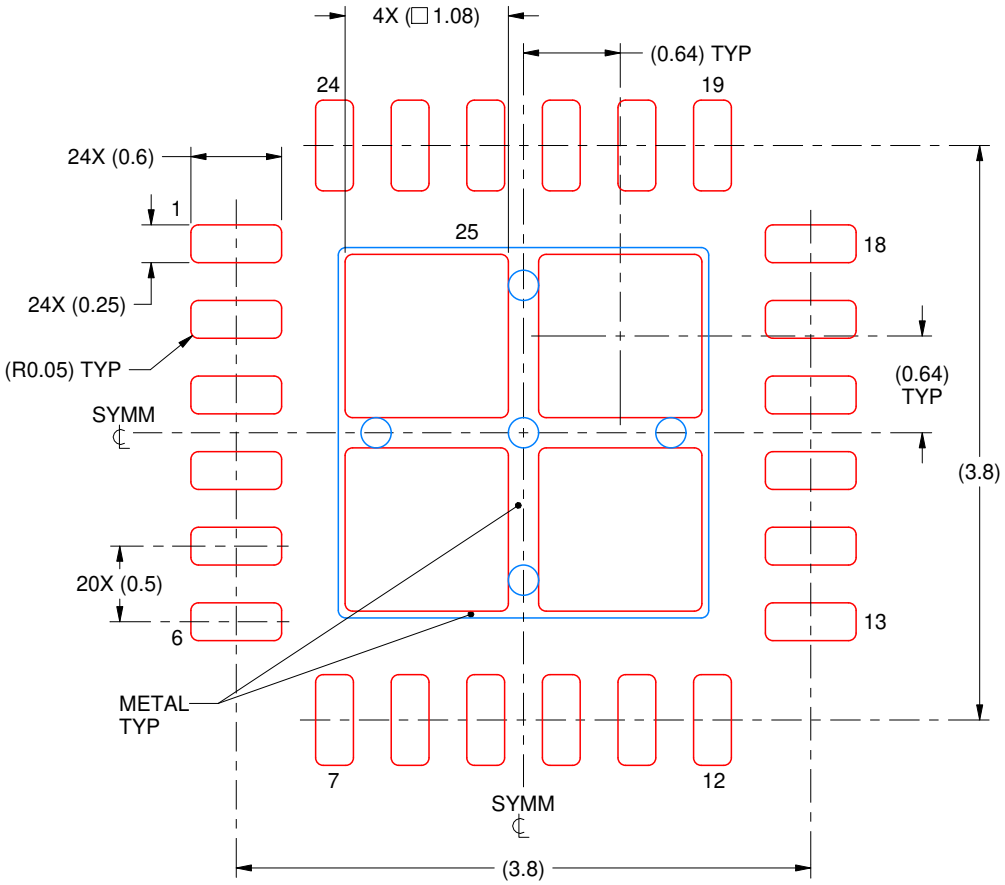

SOLDER PASTE EXAMPLE
BASED ON 0.125 mm THICK STENCIL

EXPOSED PAD 25
78% PRINTED SOLDER COVERAGE BY AREA UNDER PACKAGE
SCALE:20X

4219013/A 05/2017

NOTES: (continued)

6. Laser cutting apertures with trapezoidal walls and rounded corners may offer better paste release. IPC-7525 may have alternate design recommendations.

IMPORTANT NOTICE AND DISCLAIMER

TI PROVIDES TECHNICAL AND RELIABILITY DATA (INCLUDING DATASHEETS), DESIGN RESOURCES (INCLUDING REFERENCE DESIGNS), APPLICATION OR OTHER DESIGN ADVICE, WEB TOOLS, SAFETY INFORMATION, AND OTHER RESOURCES “AS IS” AND WITH ALL FAULTS, AND DISCLAIMS ALL WARRANTIES, EXPRESS AND IMPLIED, INCLUDING WITHOUT LIMITATION ANY IMPLIED WARRANTIES OF MERCHANTABILITY, FITNESS FOR A PARTICULAR PURPOSE OR NON-INFRINGEMENT OF THIRD PARTY INTELLECTUAL PROPERTY RIGHTS.

These resources are intended for skilled developers designing with TI products. You are solely responsible for (1) selecting the appropriate TI products for your application, (2) designing, validating and testing your application, and (3) ensuring your application meets applicable standards, and any other safety, security, regulatory or other requirements.

These resources are subject to change without notice. TI grants you permission to use these resources only for development of an application that uses the TI products described in the resource. Other reproduction and display of these resources is prohibited. No license is granted to any other TI intellectual property right or to any third party intellectual property right. TI disclaims responsibility for, and you fully indemnify TI and its representatives against any claims, damages, costs, losses, and liabilities arising out of your use of these resources.

TI’s products are provided subject to TI’s Terms of Sale, TI’s General Quality Guidelines, or other applicable terms available either on ti.com or provided in conjunction with such TI products. TI’s provision of these resources does not expand or otherwise alter TI’s applicable warranties or warranty disclaimers for TI products. Unless TI explicitly designates a product as custom or customer-specified, TI products are standard, catalog, general purpose devices.

TI objects to and rejects any additional or different terms you may propose.

Copyright © 2026, Texas Instruments Incorporated

Last updated 10/2025