RQB-100Y Series

100 W Isolated DC-DC Converter

Not Recommended for New Design
Suggested replacement:
PVQ100W-D Series

NOT FOR NEW DESIGN







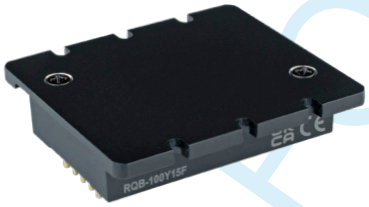

The RQB-100Y Series is a high-performance product, specifically designed for a variety of railway applications. The DC-DC converters feature 100 W single output voltage, wide input voltage from 14 - 160 VDC and extended operating temperature range from -40 to 105°C.

Additional product features include input under-voltage protection, output over-voltage, short-circuit, over-current and over-temperature protection, remote On/Off control, remote sense compensation, programmable under-voltage lockout, hold-up function, output voltage trim adjustment. The products are widely used in railway systems and associated equipment.

FEATURES

- Ultra-wide 12:1 input voltage range: 14 – 160 VDC
- High efficiency up to 90%
- Reinforced insulation, I/O isolation test voltage 3 kVAC
- Operating ambient temperature range -40 °C to +105 °C
- Input under-voltage protection, output over–voltage, over-current, short-circuit protection, over-temperature protection
- Industry standard 1/4-brick package and pin-out
- Meets EN 50155 and AREMA standard
- Safety approved according to IEC 62368-1

APPLICATIONS

- Railway related equipment

Please read our datasheet & drawing disclaimer here.

1. MODEL SELECTION

PART NUMBER	INPUT VOLTAGE RANGE [VDC]	OUTPUT VOLTAGE [VDC]	MAX. OUTPUT CURRENT [mA]	TYPICAL EFFICIENCY [%]	MAX. CAPACITIVE LOAD [µF]	SUFFIX
RQB-100Y12*x*	14 – 160	12	8330	90	7000	
RQB-100Y15*x*	14 – 160	15	6670	90	4500	No suffix = Standard model
RQB-100Y24*x*	14 – 160	24	4160	89	1800	C = Added Heatsink
RQB-100Y28*x*	14 – 160	28	3570	89	1300	
RQB-100Y48*x*	14 – 160	48	2080	90	1000	F = Added Flanged baseplate
RQB-100Y54*x*	14 – 160	54	1850	90	820	

2. INPUT SPECIFICATIONS

PARAMETER	DESCRIPTION / CONDITIONS	MIN.	TYP.	MAX.	UNIT
Input Voltage Range	Nominal	–	110	–	VDC
	Continuous operation	16.8	–	160	
	For ≤ 100 ms	14	–	–	
Input Current	24 V input, full load	–	4.7	4.9	A
	72 V input, full load	–	1.55	1.6	
	110 V input, full load	–	1.03	1.06	
No-Load Power Consumption	Full input range	–	1.2	2.0	W
Reflected Ripple Current	Nominal input voltage	–	150	–	mA
Surge Voltage	1 sec. max.		–	200	VDC
Input Under-Voltage Protection		10	11	–	VDC
Start-up Time		–	50	100	ms
Ctrl [1]	Module on	Ctrl pin open or pulled high (3.5 - 12 VDC)			
	Module off	Ctrl pin pulled low to -Vin (0 - 1.2 VDC)			
	Input power consumption when off, full input range	–	0.7	1.6	W

[1] *The Ctrl pin voltage is referenced to input -Vin.*

3. OUTPUT SPECIFICATIONS

PARAMETER	DESCRIPTION / CONDITIONS	MIN	TYP.	MAX.	UNIT
Voltage Accuracy	Nominal input voltage, full load	–	–	±1	%
Linear Regulation	Input voltage variation from min. to max. at full load	–	±0.2	±0.5	%
Load Regulation	Nominal input voltage, 10% - 100% load	–	±0.5	±1	%
Transient Recovery Time	25% load step change @ 25°C	–	–	500	µs
Transient Response Deviation		–	±3	±5	%
Temperature Coefficient	Nominal input voltage, full load	–	–	±0.03	% / °C
Ripple & Noise [2]	20 MHz bandwidth, full load @ 25°C	–	150	300	mVp-p
Output Voltage Trim Range		90	–	110	% Vo
Sense		–	–	105	% Vo
Over-Temperature Protection	Max. case temperature	106	–	130	°C
Over-Voltage Protection	Input voltage range	110	–	160	% Vo
Over-Current Protection	Input voltage range	105	160	260	% Io
Short-Circuit Protection	Input voltage range	Hiccup, continuous, self-recovery			

[2] *For ripple and noise measuring method, please refer to Figure 6.*

NOT FOR NEW DESIGN

4. GENERAL SPECIFICATIONS

PARAMETER	DESCRIPTION / CONDITIONS		MIN	TYP.	MAX.	UNIT
Isolation	Electric Strength Test	Input-output	3000	–	–	VAC
		Input-case	2500	–	–	
		Output-case	2100	–	–	
Insulation Resistance	Input-output resistance at 500 VDC		1000	–	–	MΩ
Isolation Capacitance	Input-output capacitance at 100 kHz / 0.1 V		–	1100	–	pF
Operating Temperature			-40	–	105	°C
Storage Temperature			-55	–	125	°C
Pin Soldering Resistance Temperature	Soldering spot is 1.5 mm away from case for 10 seconds		–	–	300	°C
Storage Humidity	Non-condensing		5	–	95	%RH
Switching Frequency	PWM mode		–	175	–	KHz
MTBF	IEC 61709 @ 25 °C		1000	–	–	kh
Dry Heat Test	Ta +85°C (conduction cooling)		EN 60068-2-2, Be			
Shock and Vibration Test			IEC/EN 61373 Category 1, Class B AREMA Part 11.5.1 Class C, D, E. I, J			
Pollution Level			PD 3			
Fire & Smoke Compliance			EN 45545-2, HL3			
Salt Mist Test	Duration 48 h		EN 60068-2-11, Ka			
Cyclic Damp Heat Test	2 cycles @ +55 °C		EN 60068-2-30, Db variant 2			
Altitude[3]			5000 m			
Low Temperature Start-Up & Storage Test	Ta -40 °C		EN 60068-1, Ad and Ab			

[3] Derating is needed for altitudes above 2000 m.

5. MECHANICAL SPECIFICATIONS

PARAMETER	DESCRIPTION	VALUE
Case Material		Aluminum alloy case, black plastic bottom cover (UL94 V-0)
Dimension	Without heat sink	57.9 x 36.8 x 12.7 mm
	With heat sink (suffix C)	57.9 x 36.8 x 25.4 mm
	With flanged baseplate (suffix F)	62.0 x 56.0 x 14.5 mm
Weight	Without heat sink	78 g (Typ.)
	With heat sink (suffix C)	109 g (Typ.)
	With flanged baseplate (suffix F)	99 g (Typ.)
Cooling Method		Conduction cooling or forced air cooling. Free air convection cooling with additional heat sink.

NOT FOR NEW DESIGN

© 2024 Bel Fuse Inc.

6. ELECTROMAGNETIC COMPATIBILITY (EN50121-3-2)

PARAMETER		DESCRIPTION		CLASS / CRITERIA
Emission [4]	CE	EN 55016-2-1	150 kHz – 500 kHz; 79 dBuV (see Fig. 9 for recommended circuit) 500 kHz – 30 MHz; 73 dBuV (see Fig. 9 for recommended circuit)	CLASS A
	RE	CISPR16-2-3	30 MHz – 230 MHz ; 40 dBuV/m at 10 m (see Fig. 9 for recommended circuit) 230 MHz – 6 GHz; 47 dBuV/m at 10 m (see Fig. 9 for recommended circuit)	CLASS A
Immunity	ESD	EN 61000-4-2	Contact ±6 kV/Air ±8 kV	perf. Criteria A
	RS	EN 61000-4-3	80 – 800 MHz; 20 V/m 800 – 1000 MHz; 20 V/m 1400 – 2000 MHz; 10 V/m 2000 – 2700 MHz; 5 V/m 5100 – 6000 MHz; 3 V/m	perf. Criteria A
	EFT	EN 61000-4-4	±2 kV; 5/50 ns; 5 kHz (see Fig. 9 for recommended circuit)	perf. Criteria A
	Surge	EN 61000-4-5	Line to line ±1 kV (42 Ω, 0.5 µF), line to ground ± 2 kV (42 Ω, 0.5 µF) (see Fig. 9 for recommended circuit) Line to line ±1 kV (2 Ω, 18 µF) line to ground ± 2kV (12 Ω, 9 µF) (see Fig. 9 for recommended circuit)	perf. Criteria A
	CS	EN 61000-4-6	0.15 MHz – 80 MHz 10 V r.m.s	perf. Criteria A

[4] *Corresponds or exceeds EN50121-3-2.*

7. ELECTROMAGNETIC COMPATIBILITY (AREMA)

PARAMETER		DESCRIPTION		CLASS / CRITERIA
Emissions	CE	CISPR16-2-1 CISPR16-1-2	150 kHz – 500 kHz; 79 dBuV (see Fig. 9 for recommended circuit) 500 kHz – 30 MHz; 73 dBuV (see Fig. 9 for recommended circuit)	CLASS A
	RE	CISPR16-2-3	30 MHz – 230 MHz; 40 dBuV/m at 10 m (see Fig. 9 for recommended circuit) 230 MHz – 1 GHz; 47 dBuV/m at 10 m (see Fig. 9 for recommended circuit)	CLASS A
Immunity	ESD	IEC 61000-4-2	Contact ±6 kV/Air ± 8 kV	perf. Criteria A
	RS	IEC 61000-4-3	80 – 1000 MHz; 10 V/m 160 – 165 MHz; 20 V/m 450 – 470 MHz; 20 V/m 800 – 960 MHz; 20 V/m 1400 – 2000 MHz; 20 V/m 2100 – 2500 MHz; 5 V/m	perf. Criteria A
	EFT	IEC 61000-4-4	±2 kV 5/50 ns; 5 kHz (see Fig. 9 for recommended circuit)	perf. Criteria A
	Surge	IEC 61000-4-5	Line to line ±2 kV (2 Ω, 18 µF); line to ground ± 2 kV (2 Ω, 18 µF) (see Fig. 9 for recommended circuit)	perf. Criteria A
	CS	IEC 61000-4-6	0.15 MHz-80 MHz; 10 V r.m.s	perf. Criteria A
	MS	IEC 61000-4-8 IEC 61000-4-8	60 Hz; 100 A/m (see Fig. 9 for recommended circuit) 60 Hz; 300 A/m (see Fig. 9 for recommended circuit)	perf. Criteria A

NOT FOR NEW DESIGN

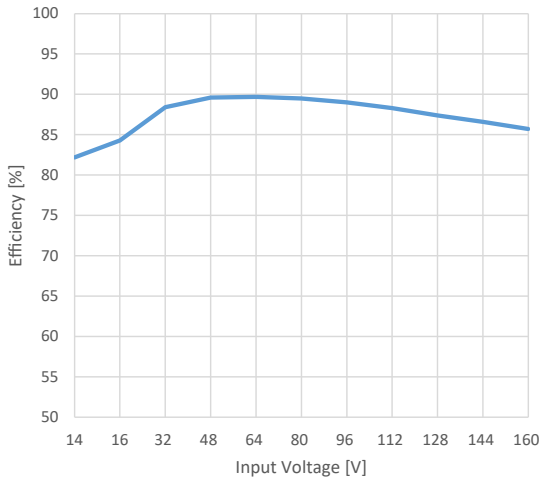

Figure 1. Efficiency vs. Input Voltage

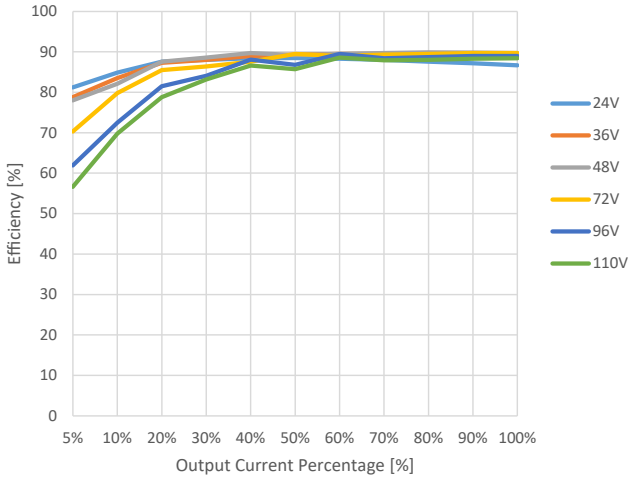

Figure 2. Efficiency vs. Output Load

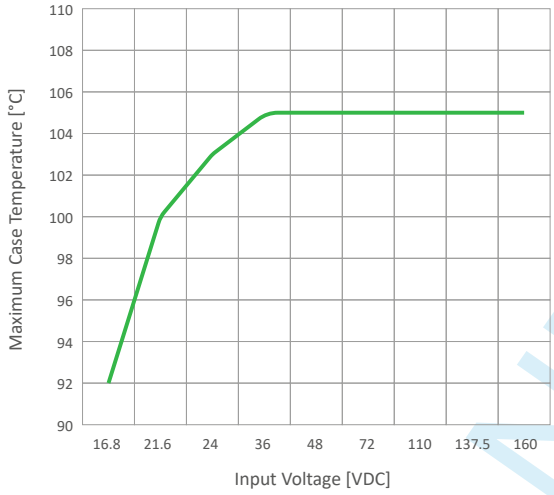

Figure 3. Maximum Case Temperature vs. Input Voltage

8. REMOTE SENSE APPLICATION

8.1 REMOTE SENSE CONNECTION IF NOT USED

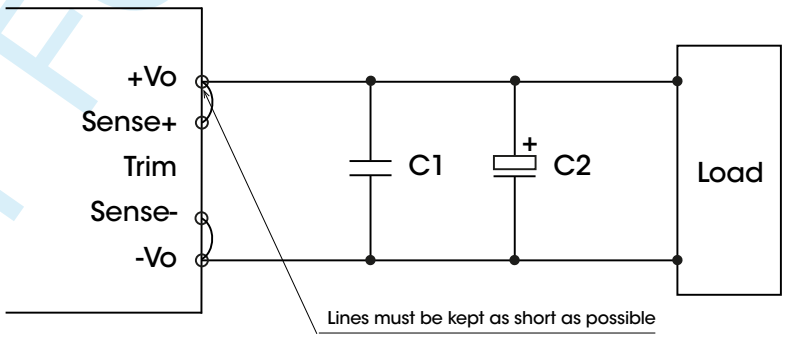

Figure 4. Remote Sense Connection If Not Used

NOTES:

1. If the sense function is not used for remote regulation the user must connect the +Sense to +Vo and -Sense to 0V at the DC-DC converter pins and will compensate for voltage drop across pins only.
2. The connections between Sense lines and their respective power lines must be kept as short as possible, otherwise they may be picking up noise, interference and/or causing unstable operation of the power module.

NOT FOR NEW DE

© 2024 Bel Fuse Inc.

8.2 REMOTE SENSE CONNECTION USED FOR COMPENSATION

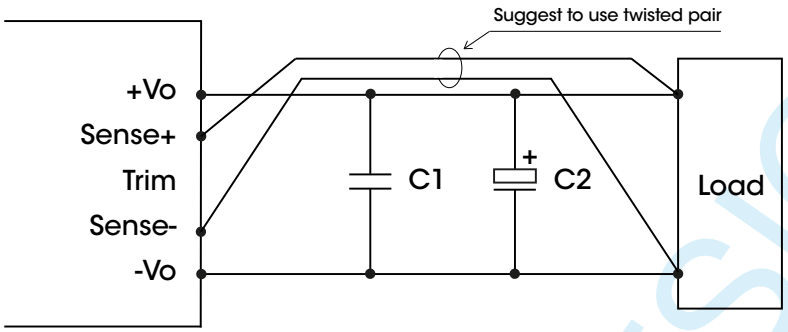

Figure 5. Remote Sense Connection Used For Compensation

NOTES:

1. Using remote sense with long wires may cause unstable output, please contact technical support if long wires must be used.
2. PCB-tracks or cables/wires for Remote Sense must be kept as short as possible. Twisted pair or shielded wires are suggested for remote compensation and must be kept as short as possible.
3. We recommend using adequate cross section for PCB-track layout and/or cables to connect the power supply module to the load in order to keep the voltage drop below 0.3 V and to make sure the power supply's output voltage remains within the specified range.
4. Note that large wire impedance may cause oscillation of the output voltage and/or increased ripple.

9. DESIGN REFERENCE

9.1 RIPPLE & NOISE

All the DC-DC converters of this series are tested before delivery using the recommended circuit shown in Fig. 6.

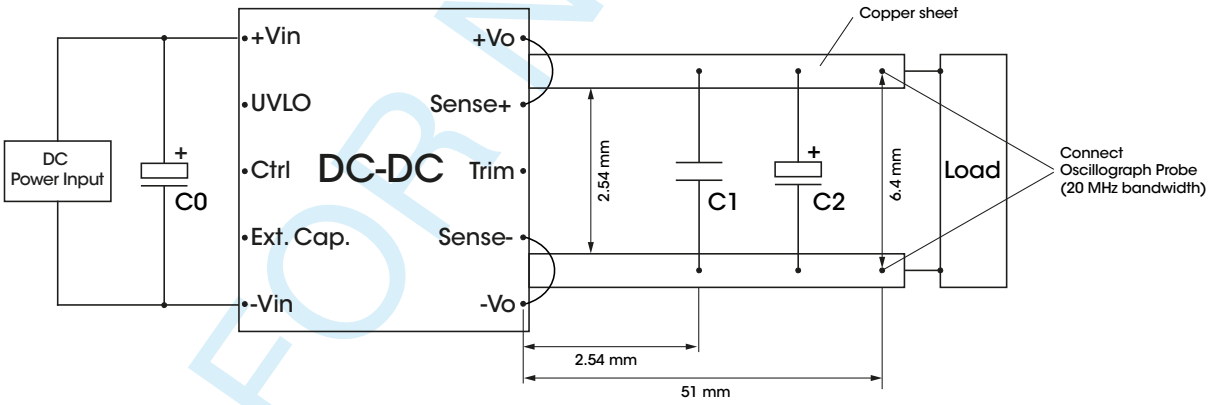

Figure 6. Recommended Test Circuit

	Capacitor value	C0 [µF]	C1 [µF]	C2 [µF]
Output Voltage	12 VDC	100 Voltage ≥ 250 V	1 Voltage ≥ 1.2* Vo	330 Voltage ≥ 1.2* Vo
	15 VDC			
	24 VDC			
	28 VDC			
	48 VDC			
	54 VDC			

NOT FOR NEW DESIGN

9.2 TYPICAL APPLICATION

1. Please ensure that at least a 100 µF electrolytic capacitor is connected at the input in order to ensure adequate voltage surge suppression and protection.
2. Output ripple can be further reduced by appropriately increasing the output capacitor values C2 and/or by selecting capacitors with a low ESR (equivalent series resistance). Also make sure that the capacitance is not exceeding the specified max. capacitive load value of the product.
3. The UVLO pin can adjust the point of input under-voltage protection by the external resistance R_{UVLO},for the value of R_{UVLO}, please refer to Fig. 14. If the pin is open circuit, the point of input under-voltage protection is 11 V.
4. Recommended circuit for Ctrl negative logic refer to Fig. 7.

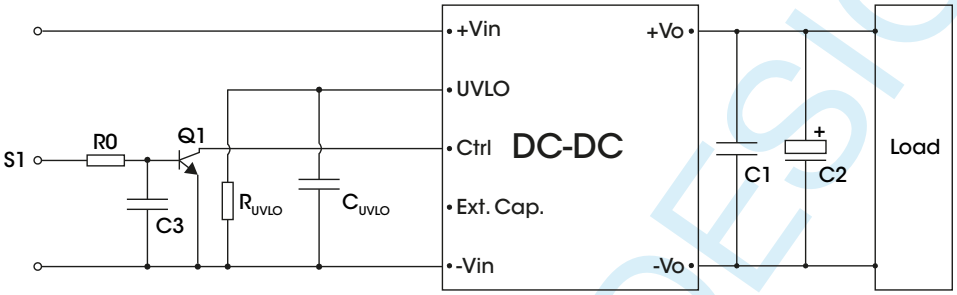

Figure 7. Recommended circuit for Ctrl negative logic

COMPONENTS	VALUE	RECOMMENDED COMPONENT
R0	10 kΩ	—
C3	0.1 µF	Voltage ≥ 25 V
Q1	Ic ≥ 10 mA	Voltage ≥ 30 V

9.3 TRIM FUNCTION FOR OUTPUT VOLTAGE ADJUSTMENT (open if unused)

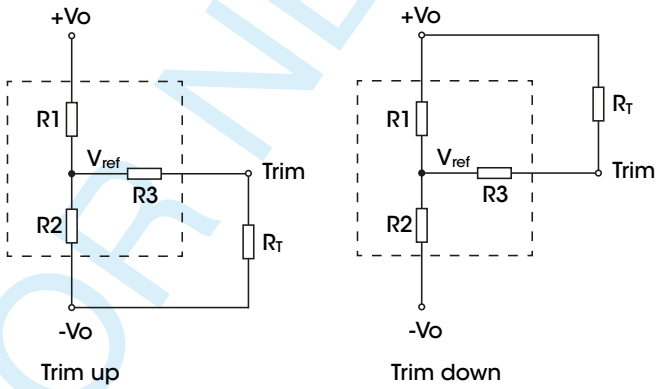

Figure 8. Trim resistor connection (dashed line shows internal resistor network)

Calculation formula of Trim resistance:

$$\text{Trim up: } R_T = \frac{a * R_2}{R_2 - a} - R_3 \qquad a = \frac{2.5 * R_1}{V_O - 2.5}$$

$$\text{Trim down: } R_T = \frac{b * R_1}{R_1 - b} - R_3 \qquad b = \frac{(V_O - 2.5) * R_2}{2.5}$$

NOTES:

a, b : Self-defined parameter, round to the nearest hundredth
R_T [kΩ] : Resistance of Trim
V_O : Output voltage change
V_{ref} [VDC] : Reference voltage

	Vo	12 V	15 V	24 V	28 V	48 V	54 V
Res	R1 [kΩ]	11	14.35	24.8	28.8	54	61
	R2 [kΩ]	2.87	2.87	2.87	2.87	2.94	2.94
	R3 [kΩ]	22	20.2	23.1	23.1	18.2	18.2

NOT FOR NEW DESIGN

© 2024 Bel Fuse Inc.

9.4 EMC COMPLIANCE CIRCUIT

1. External circuit breaker and diode D1 form an anti-reverse circuit, and the diode withstand voltage requirement is above 250 V;
2. EMC Filter will be provided in a modular form, here is a recommended circuit and parameters, as shown in Fig. 9. Users can also build it themselves.
3. The resistance R_{UVLO} sets the undervoltage protection point, for the value of R_{UVLO}, please refer to Fig. 14.

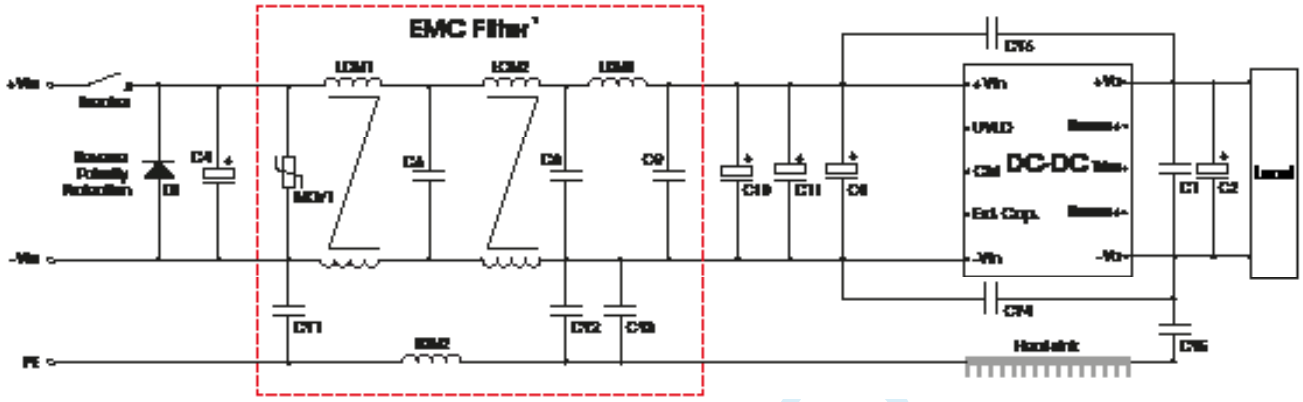

Figure 9. Recommended EMC Filtering

COMPONENTS	VALUE	RECOMMENDED COMPONENT
C1	1 µF	CERAMIC; 1µF; 10%; 100 V; X7R; 1206; -55 to +125°C
C2	330 µF	ELECTROLYTIC; Al, WET; RADIAL; 330 µF; 20%; 63 V; Ø 10 x 20 mm; PITCH 5 mm; -40 to +105°C
C4	560 µF	ELECTROLYTIC; Al, WET; RADIAL; 560 µF; 20%; 200 V; Ø 18 x 45 mm; PITCH 7.5 mm; -40 to +105°C
C6	0.1 µF	CERAMIC; 0.1 µF; 10%; 630 V; X7R; 1812; -55 to +125°C
C8	0.22 µF	CERAMIC; 0.22 µF; 10%; 250 V; X7R; 1206; -55 to +125°C
C9	2.2 µF	CERAMIC; 2.2 µF; 10%; 250 V; X7R; 2220; -55 to +125°C
LDM1	0.47 µH	POWER CHOKE; 0.47 µH; 20%; 14 A; 5.5 mOhm; -55 to +125°C
LDM2	150 µH	CHOKE; 150 µH; 35%; 1 A; 30 mOhm; -40 to +125°C
LCM1	≥ 2 mH	COMMON MODE; TOROIDAL; FERRITE; THT; 2 mH; 12 A; 20 mOhm; -40 to +125°C
LCM2	≥ 4 mH	COMMON MODE; TOROIDAL; FERRITE; THT; 4 mH; 10 A; 35 mOhm; -40 to +125°C
CY1, CY2,	2.2 nF	CERAMIC; X1/Y1; 2.2 nF; 10%; 400 V; PITCH 10 mm; -40 to+125°C
CY3	1 nF	CERAMIC; X1/Y1; 1 nF; 10%; 400 V; PITCH 10 mm; -40 to+125°C
CY4, CY5, CY6	3.3 nF	CERAMIC; X1/Y1; 3.3 nF; 20%; 400 V; PITCH 10 mm; -40 to+125°C
D1	20 A	SCHOTTKY; DUAL; 200 V; 2x 20 A; Vf 0.95 V; TO220; -55 to +150°C; COMMON CATHODE
MOV1	220 V / 19 J	VDR; 220 V; 1.8 kA; 19 J; THT; PITCH 5 mm; -40 to +105°C
Fuse or Breaker [2]	15 A	Type C

[1] Use of EMC Filter Bel Power P/N: FRH100-00 is recommended.

[2] Type of fuse / circuit breaker to be selected according to the application requirements. The current rating shall be above the maximum working input current and below rated working current of reverse polarity diode.

SURGE STANDARD	COMPONENTS	VALUE	RECOMMENDED COMPONENT
line to line ± 1 kV (42 Ω, 0.5 µF) line to ground ± 2 kV (42 Ω, 0.5 µF)	C0	100 µF	ELECTROLYTIC; Al,WET; RADIAL; 100 µF; 20%; 250 V; Ø 16 x 20 mm; PITCH 7.5 mm; -40 to +105°C
	C10, C11	—	—
line to line ± 1 kV (2 Ω, 18 µF) line to ground ± 2 kV (12 Ω, 9 µF)	C0, C10	100 µF	ELECTROLYTIC; Al,WET; RADIAL; 100 µF; 20%; 250 V; Ø 16 x 20 mm; PITCH 7.5 mm; -40 to +105°C
	C11	—	—
line to line ± 2 kV (2 Ω, 18 µF) line to ground ± 2 kV (2 Ω, 18 µF)	C0, C10, C11	100 µF	ELECTROLYTIC; Al,WET; RADIAL; 100 µF; 20%; 250 V; Ø 16 x 20 mm; PITCH 7.5 mm; -40 to +105°C

NOT RECOMMENDED FOR NEW DESIGN

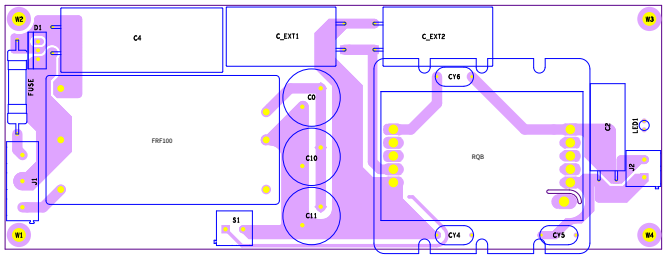

Figure 10. Recommended PCB Layout - Top view

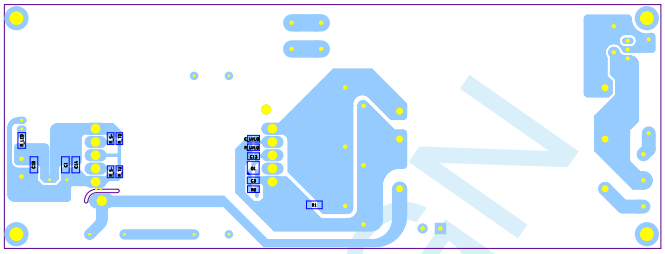

Figure 11. Recommended PCB Layout - Bottom view

9.5 HOLD-UP TIME SETUP CAPACITOR

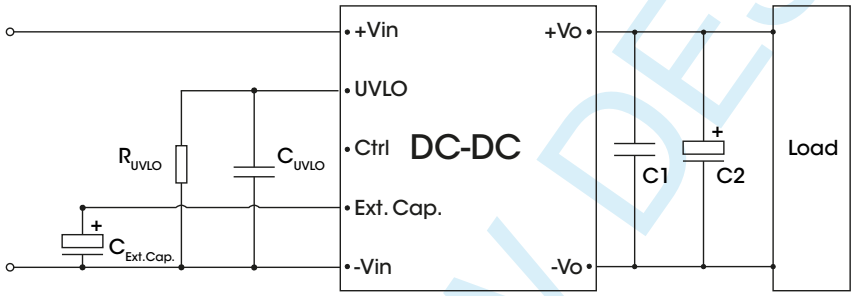

Figure 12. Recommended circuit for external hold-up capacitor

To meet power supply interruptions, an external circuit comprised of a capacitor ($C_{Ext.Cap.}$) is required.

NOTE: If there is no requirement for the hold-up time, there is no need to add the $C_{Ext.Cap.}$. For the hold-up time of 10 ms, please refer to table below:

Vin [V]		24	36	48	72	96	110
Po [W]		100	100	100	100	100	100
$C_{Ext.Cap.}$	Δt: 10 ms	470 µF / 100 V					

NOT FOR NEW DESIGN

© 2024 Bel Fuse Inc.

9.6 APPLICATION CIRCUITS IN MULTIPLE MODULE PARALLEL REDUNDANCY DESIGN

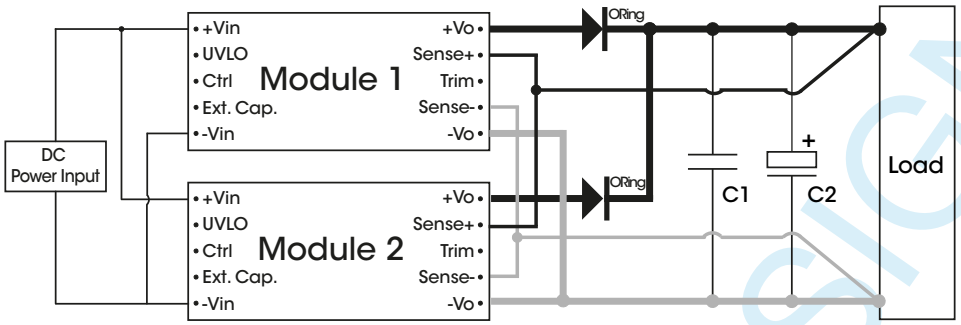

Figure 13. Multiple Modules Connected in Parallel

NOTES:

1. User shall choose appropriate ORing device (diode or MOSFET) according to the output current
2. Because the output impedance of the two modules is different, the output power of each module cannot be guaranteed to be equal; Pload = P1 + P2 <Pmax (100 W).

10. UVLO FUNCTION AND R_{UVLO} VALUES

This series product has ultra wide input range. It could cover many kinds of nominal input voltage in one module. In order to preventing incorrect operating under different input system, it offers UVLO adjustment by connecting a resistor to set UVLO threshold.

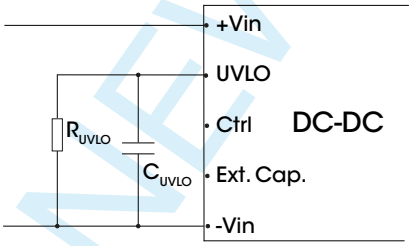

Figure 14. Recommended circuit for undervoltage-lockout adjustment

UVLO values for various nominal input voltage and R_{UVLO} table:

Nominal input voltage [V]	24	36	48	72	96	110
Starting Voltage [V]	13.2	19.5	26.9	40.3	53.4	61.1
Shutdown Voltage [V]	11.2	16.7	23.3	34.8	46.3	53.1
R_UVLO Setup Resistance [kΩ]	open circuit	150	56.1	18.3	5.6	1.5
C_UVLO Setup Calculation	open circuit	100 nF / 50 V	100 nF / 50 V	100 nF / 50 V	100 nF / 50 V	100 nF / 50 V

Calculation formula of R_{UVLO} setup resistance:

$$R_{UVLO} = \frac{182 * c}{182 - c} - 20$$

$$c = \frac{1272.35}{V_{shutdown} - 6.45}$$

NOTES:

c : Self-defined parameter

R_{UVLO} [kΩ] : UVLO setup resistance

$V_{shutdown}$: UVLO shutdown voltage

NOT FOR NEW DESIGN

11. MECHANICAL SPECIFICATIONS

11.1 MECHANICAL DIMENSIONS AND RECOMMENDED LAYOUT (STANDARD MODEL)

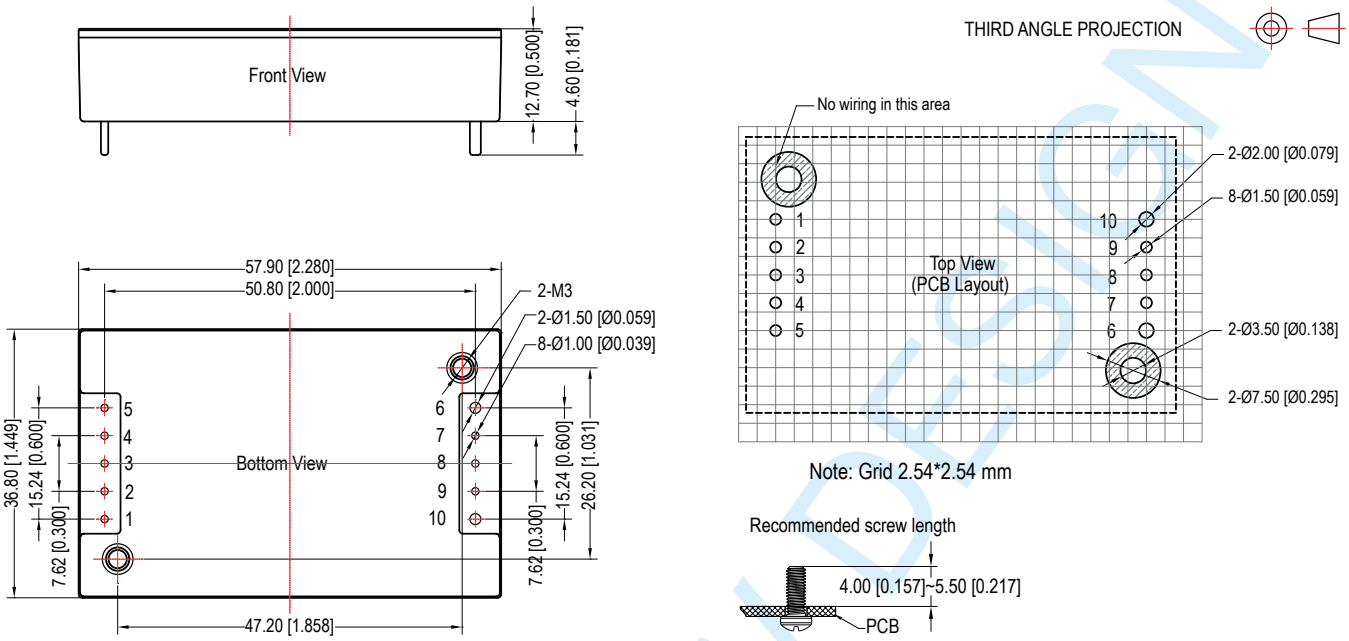

Notes:
Unit: mm [inch]
Pin1,2,3,4,5,7,8,9's diameter: 1.00 [0.039]
Pin6,10's diameter: 1.50 [0.059]
Pin diameter tolerances: ±0.10 [±0.004]
General tolerances: ±0.50 [±0.020]
Mounting hole screwing torque: Max 0.4 Nm

Pin-Out			
Pin	Mark	Pin	Mark
1	+Vin	6	-Vo
2	UVLO	7	Sense-
3	Ctrl	8	Trim
4	Ext. Cap.	9	Sense+
5	-Vin	10	+Vo

Figure 15. Mechanical Drawing of Standard Model

NOT FOR NEW DESIGN

© 2024 Bel Fuse Inc.

11.2 MECHANICAL DIMENSIONS AND RECOMMENDED LAYOUT (FLANGED BASEPLATE - SUFFIX F)

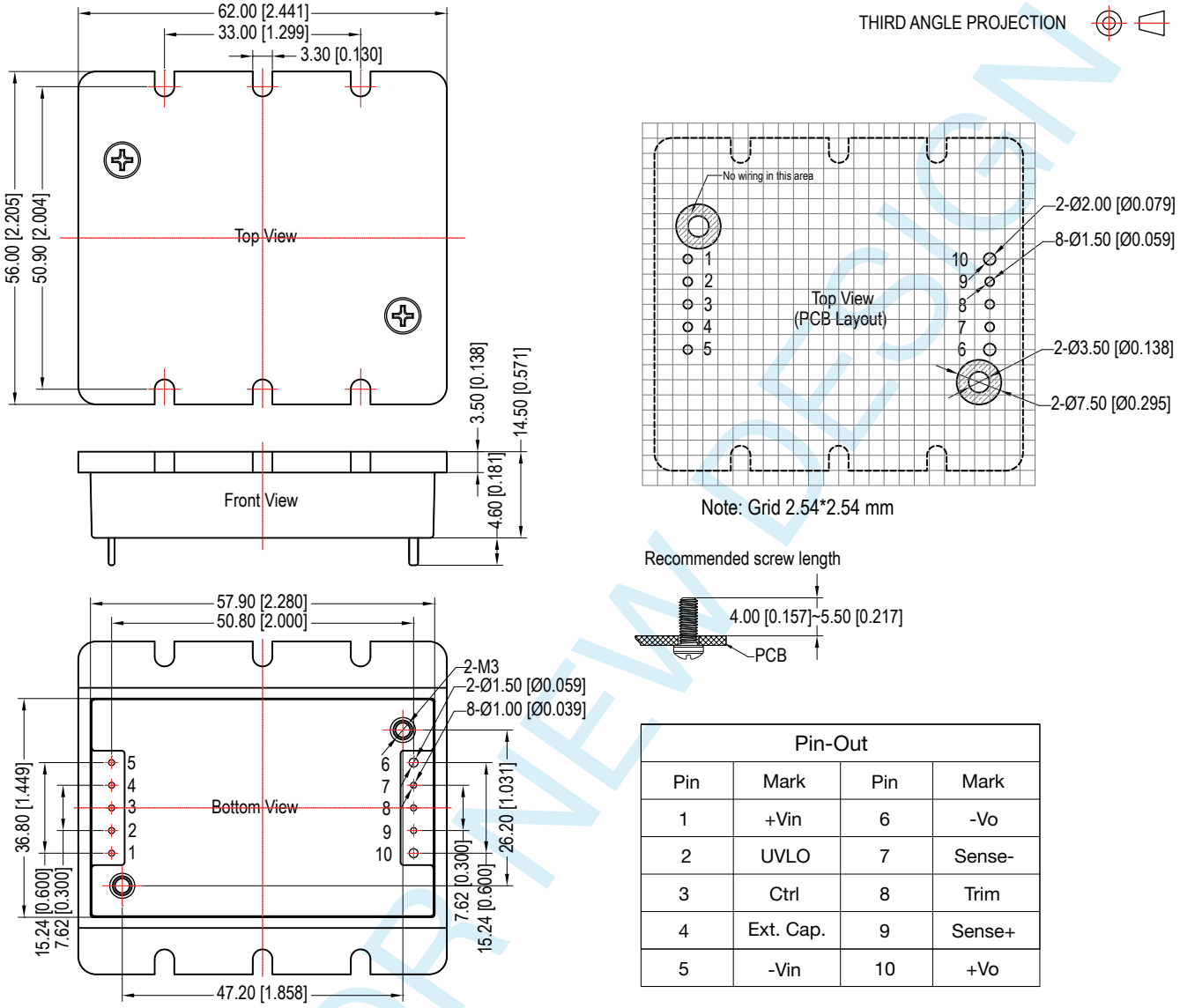

Pin-Out			
Pin	Mark	Pin	Mark
1	+Vin	6	-Vo
2	UVLO	7	Sense-
3	Ctrl	8	Trim
4	Ext. Cap.	9	Sense+
5	-Vin	10	+Vo

Notes:
Unit: mm [inch]
Pin1,2,3,4,5,7,8,9's diameter: 1.00 [0.039]
Pin6,10's diameter: 1.50 [0.059]
Pin diameter tolerances: ±0.10 [±0.004]
General tolerances: ±0.50 [±0.020]
Mounting hole screwing torque: Max 0.4 Nm

Figure 16. Mechanical Drawing of Model with Flanged Baseplate (Suffix F)

NOT FOR NEW DESIGN

11.3 MECHANICAL DIMENSIONS AND RECOMMENDED LAYOUT (HEATSINK - SUFFIX C)

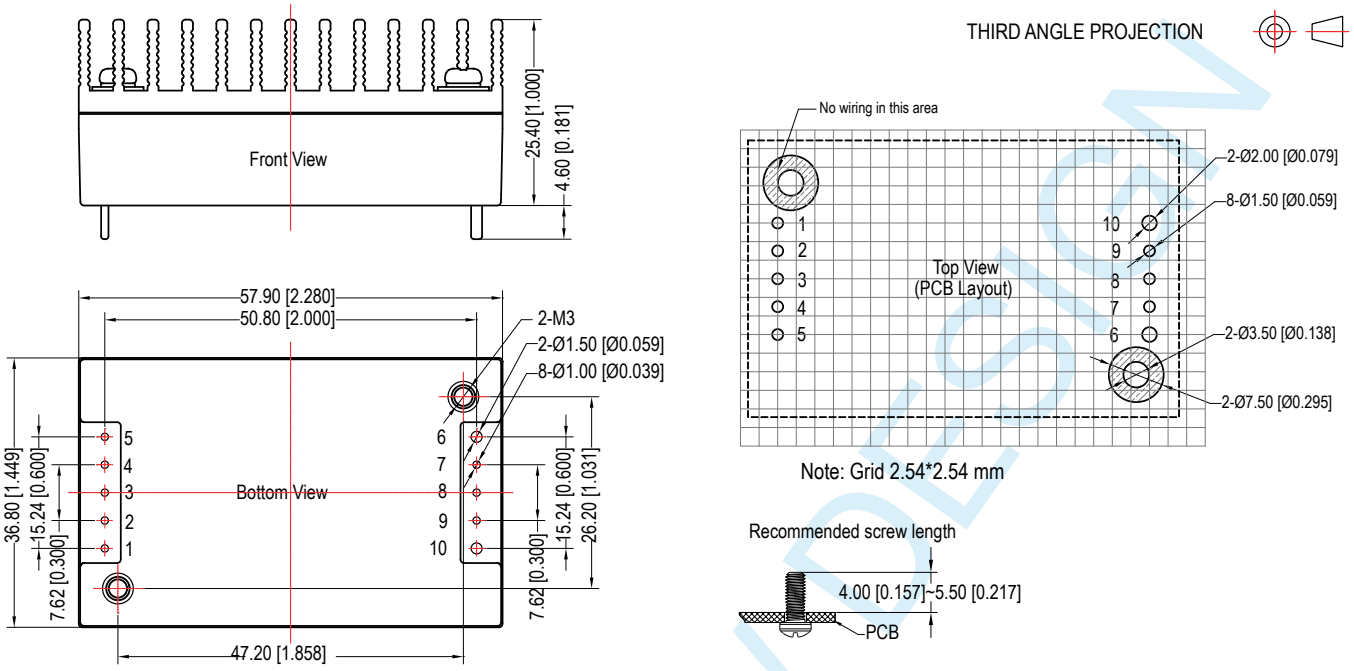

Pin-Out			
Pin	Mark	Pin	Mark
1	+Vin	6	-Vo
2	UVLO	7	Sense-
3	Ctrl	8	Trim
4	Ext. Cap.	9	Sense+
5	-Vin	10	+Vo

Notes:
Unit: mm [inch]
Pin1,2,3,4,5,7,8,9's diameter: 1.00 [0.039]
Pin6,10's diameter: 1.50 [0.059]
Pin diameter tolerances: ±0.10 [±0.004]
General tolerances: ±0.50 [±0.020]
Mounting hole screwing torque: Max 0.4 Nm

Figure 17. Mechanical Drawing of Model with Heatsink (Suffix C)

NOT FOR NEW DESIGN

© 2024 Bel Fuse Inc.