Compact PCI®
CPA / CPD Series

200 – 550 Watt AC-DC and DC-DC Converters

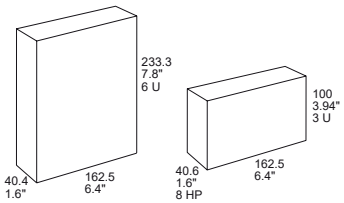

Features

- Compliant to PICMG® CompactPCI® specifications
- Wide range DC or AC input with PFC
- Extremely high efficiency and high power density
- Low inrush current
- 4 high current outputs with flexible load distribution
- Integrated ORing FETs / diodes for true redundancy
- Inhibit and enable inputs
- Remote sense lines
- Single-wire current share function for 3 outputs
- Hot-swap capability
- 47 pin connector, type Positronic
- Overtemperature, overvoltage, overcurrent, and overpower protection
- Safety-approved to the latest edition of UL/CSA 60950-1 and IEC/EN 62368-1

Table of Contents

Description....2
Model Selection....2
Functional Description....3
Electrical Input Data....5
Electrical Output Data....7
Auxiliary Functions....11
Electromagnetic Compatibility (EMC)....14
Immunity to Environmental Conditions....17
Mechanical Data....18
Safety and Installation Instructions....19
Description of Options....21

POWER | PROTECT | CONNECT

belfuse.com/power-solutions

Please read our datasheet & drawing disclaimer here.

Compact PCI® CPA/CPD Series

200 – 550 Watt AC-DC & DC-DC Converters

MELCHER™

Description

The CPA and CPD Series are highly reliable power supplies for CompactPCI® systems, which are increasingly used in communications, industrial, military, aerospace, and other applications. These power supplies offer high power density in plug-in modules that meet the requirements of the PICMG® power interface specification for CompactPCI® systems.

The converters use the patented EDGE™ technology and provide important advantages such as flexible output power, extremely high efficiency, excellent reliability, full input-to-output isolation, negligible inrush current, hot-swap capability, soft start, and overtemperature protection.

The input is protected by a transient suppressor (varistor) against surges and transients occurring on the source lines and cover an operating input voltage range from either 90 to 264 VAC or 36 to 75 VDC.

The outputs are protected against continuous overload, open-circuit, and short-circuit. Full n+1 redundant operating mode is made possible by integrated ORing FETs or ORing diodes. When several converters are connected in parallel, a single-wire connection between converters ensures proper current sharing.

The converters are designed with two or three separate forward converters with fixed switching frequency and synchronous rectifiers at their output.

LEDs on the front panel and various warning signals display the status of the converter. The aluminum case acts as a heat sink and as an RFI shield. It is designed for vertical insertion into 19" rack systems, but it can also be mounted in any other position, as long as the necessary airflow is ensured. The connector is a 47 pin type from Positronic or similar.

Several options are available to meet different requirements.

Model Selection

Table 1: Model selection

Model [4]	Output				Operating Input Range	Rated Power [1]	Efficiency [2]		Case	Options
	No.	$V_{o\,nom}$ [V]	$I_{o\,nom}$ [A]	$I_{o\,max}$ [A]	$V_{i\,min} – V_{i\,max}$ $f_{i\,min} – f_{i\,max}$	$P_{o\,nom}$ [W]	min [%]	typ [%]		
CPD200-4530G	Vo1 Vo2 Vo3 Vo4	5.0 3.3 12 -12	20 20 2.5 0.5	40 40 5.5 2	36...(48)...75 VDC	200	80	83.2	3U x 8HP	-
CPD250-4530G	Vo1 Vo2 Vo3 Vo4	5.0 3.3 12 -12	25 20 4 1	40 40 5.5 2		250	80	81.7	3U x 8HP	L, A, C
CPD500-4530G	Vo1 Vo2 Vo3 Vo4	5.0 3.3 12 -12	40 50 8 3	50 60 12 4		500	83	84.5	6U x 8HP	C
CPA200-4530G	Vo1 Vo2 Vo3 Vo4	5.0 3.3 12 -12	20 20 2.5 0.5	40 40 5.5 2	90...(230)...264 VAC 47 – 63 Hz [3]	200	81.5	83.7	3U x 8HP	-
CPA250-4530G	Vo1 Vo2 Vo3 Vo4	5.0 3.3 12 -12	25 20 4 1	40 40 5.5 2		250	81.5	83.2	3U x 8HP	L, A, C
CPA500-4530G	Vo1 Vo2 Vo3 Vo4	5.0 3.3 12 -12	40 50 8 3	50 60 12 4		500	83	85	6U x 8HP	L, A, F, C
CPA550-4530G	Vo1 Vo2 Vo3 Vo4	5.0 3.3 12 -12	50 50 8 3	50 60 12 4		550	83	84.7	6U x 8HP	-

1 The sum of the power of all outputs may not exceed the total power for the specified required forced-air cooling.
2 Efficiency at T_A = 25 °C, $V_{i\,nom}$, $I_{o\,nom}$.
3 Rated input voltage range is 100 – 240 VAC, rated input frequency range is 50 – 60 Hz.
4 RoHS is standard, with G suffix at the end of the part number.

NFND: Not for new designs.

Note: The sequence of options in the model designation must follow the order above. G is always placed at the end.

© 2025 Bel Fuse Inc. BCD20005-G_AR 20 May 2025

Compact PCI® CPA/CPD Series

200 – 550 Watt AC-DC & DC-DC Converters

Product Marking

Label with specific type designation, applicable safety approvals and recognition marks, CE mark, warnings, patents, company logo, input voltage range, nominal output voltages and output currents, degree of protection, batch no., serial no., and data code including production site, modification status, and date of production. Identification of LEDs on the front panel.

Functional Description

The inputs of all converters are protected against surges and transients occurring on the source lines. A highly efficient input filter and an active inrush current limiter ensure a very low inrush current of short duration. This prevents circuit breakers and fuses from tripping at switch-on.

All CPA models have an additional bridge rectifier and a boost converter to provide active power factor correction (PFC) according to EN 61000-3-2.

The CPx200/250 models (see fig.1a) are equipped with two independent high efficient 2-switch forward converters, switching 180° out of phase to minimize the ripple current at the input.

On the secondary side, two high-current synchronous rectifiers supply Vo1 (5 V) and Vo2 (3.3 V) with up to 40 A. The secondary-controlled Vo3 (+12 V) post regulator is supplied by an additional winding of the 3.3 V main transformer. The linear regulator for Vo4 (–12 V) is supplied from the output choke of the Vo3 output. The output filters reduce ripple and noise to a minimum without compromising the dynamic response.

The models CPD500 (fig. 1b) and CPA500/550 (fig. 1c) exhibit a third forward converter for both outputs Vo3 and Vo4. The outputs Vo1 an Vo2 provide up to 50 and 60 A.

All outputs are fully regulated and protected from the bus by decoupling FETs or diodes. A current monitor calculates the output power. As soon as the output power exceeds the maximum threshold level, the converter starts to reduce the output power by decreasing the output voltages.

In contrast to the outputs Vo1 (5 V), Vo2 (3.3 V), and Vo3 (+12 V) with active current sharing, output Vo4 (–12 V) has a droop characteristic for passive current sharing.

If for some reason the voltage of any output exceeds the nominal value significantly, the converter is permanently shut down. If option L is fitted, this occurs as well, if the max. output current is exceeded for a predefined time. To reset, the input voltage must be removed for a short time.

Melcher's Efficient Dual Geometric Edge Technology (EDGE™) facilitates high current density, increases reliability by reducing component stresses, and decreases the amount of heat dissipated. The backbone of this patented technology is an interleaved, multi-channel forward converter utilising a transitional resonant switching technique and proprietary leading and trailing-edge pulse-width modulation. It has a proven track record in high-availability power solutions.

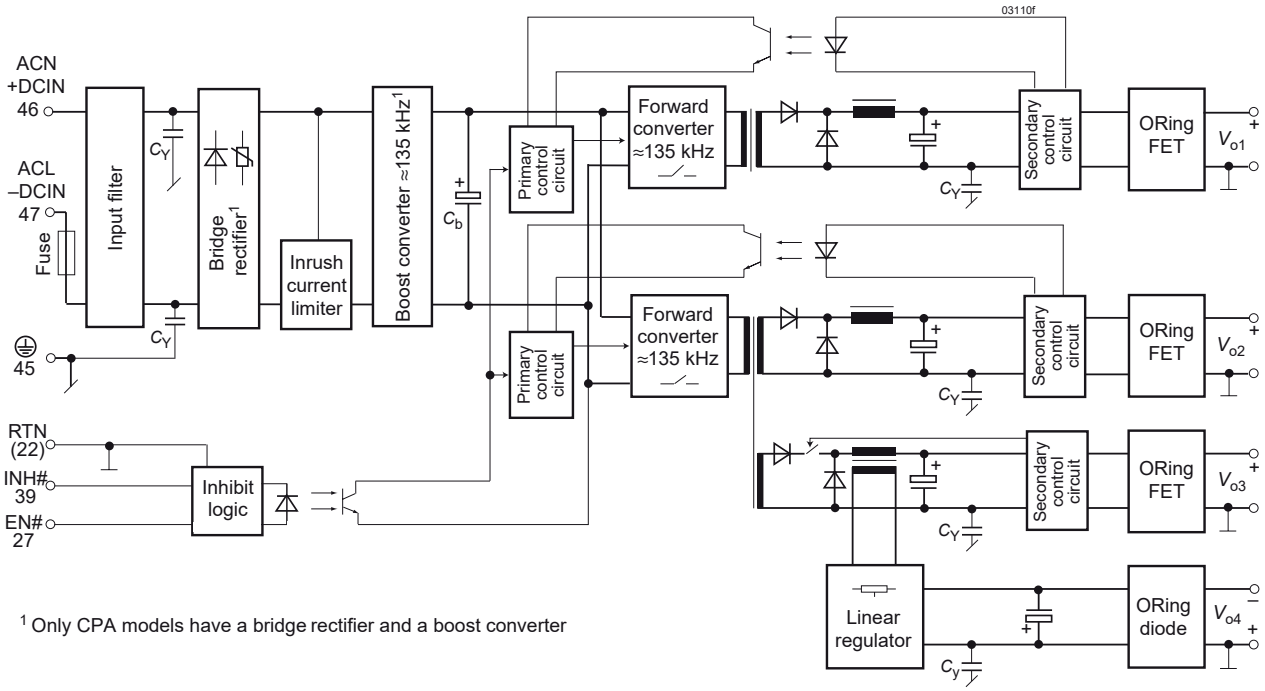

Fig. 1a
Block diagram of CPA/CPD200 and CPA/CPD250 models. For the pin allocation, see Mechanical Data.

© 2025 Bel Fuse Inc. BCD20005-G_AR 20 May 2025

Compact PCI® CPA/CPD Series

200 – 550 Watt AC-DC & DC-DC Converters

The switching frequency is typically 135 kHz. Recent models (CPD200/250 version V119 or later, CPA200/250 version V117 or later, CPA500/550 version V110 or later, not CPD500) exhibit a crystal oscillator with 131 kHz.

All models have a separate auxiliary supply for the primary circuits, the CPD500 as well for the secondary circuits. The secondary bias voltage of the other models is generated by the forward converters. Only the forward converters are controlled by the inhibit and enable inputs; see *Auxiliary Functions.*

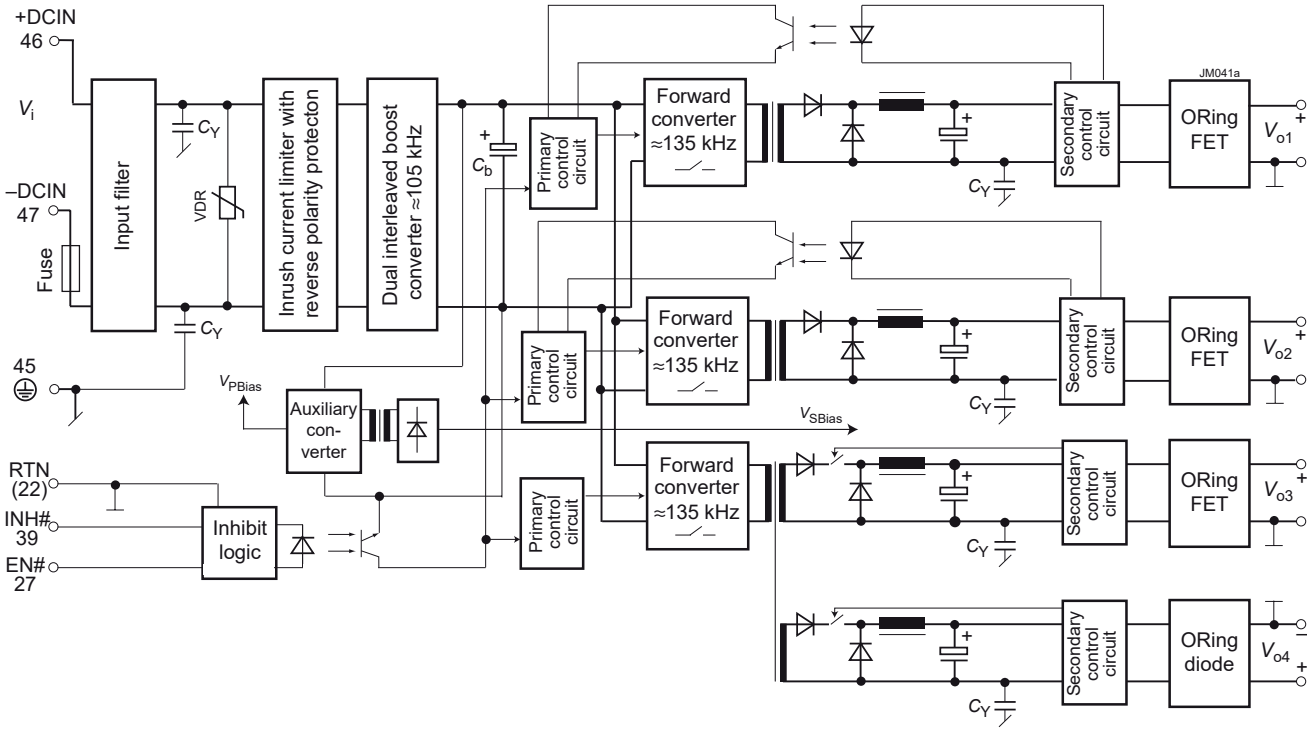

Fig. 1b
Block diagram of CPD500 models. For the pin allocation, see Mechanical Data.

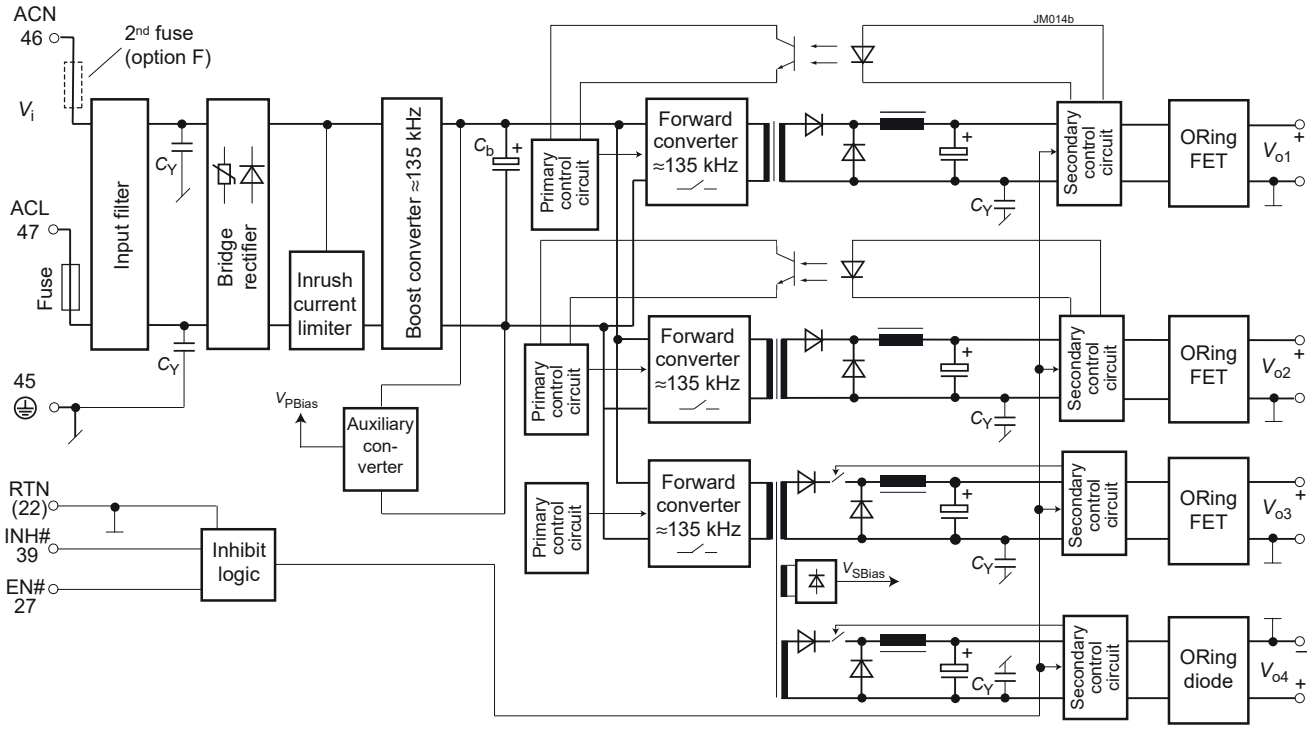

Fig. 1c
Block diagram of CPA 500/550 models. For the pin allocation, see Mechanical Data.

© 2025 Bel Fuse Inc. BCD20005-G_AR 20 May 2025

Compact PCI® CPA/CPD Series

200 – 550 Watt AC-DC & DC-DC Converters

MELCHER™

Electrical Input Data

General Conditions:
T_A = 25 °C, unless T_C is specified.

Table 2a: Input data of CPD models

Model			CPD200/250			CPD500			Unit
Characteristics		**Conditions**	**min**	**typ**	**max**	**min**	**typ**	**max**	
V_i	Operating input voltage	$I_o = 0 – I_{o\,nom}$	36		75	36		75	VDC
$V_{i\,nom}$	Nominal input voltage	$T_{C\,min} – T_{C\,max}$		48			48		
$V_{i\,abs}$	Input voltage limits	≤60 s, no damage	0		80	0		80	
I_i	Typical input current	$V_{i\,nom}$, $I_{o\,nom}$		5.1 / 6.3 [2]			12.5		A
$I_{i\,max}$	Max input current	$V_{i\,min}$, $I_{o\,nom}$		7.0 / 8.7 [2]	7.6 / 9.5 [2]		17	17.5	
$I_{inr\,p}$	Peak inrush current	$V_{i\,nom}$, $I_{o\,nom}$			12			25	
$P_{i\,0}$	No-load input power	$V_{i\,min}$, $I_o = 0$ $V_{i\,nom}$, $I_o = 0$ $V_{i\,max}$, $I_o = 0$		14 18 27	 30		28.6 28 27.5	 31	W
$P_{i\,inh}$	Input power when inhibited	$V_{i\,min} – V_{i\,max}$			3.2			9.4	
C_i	Input capacitance			1360			15		µF
f_{switch}	Switching frequency	$V_{i\,nom}$, $I_{o\,nom}$		135			135		kHz
t_h	Hold-up time	$V_{i\,min} \rightarrow 0$ V, $I_{o\,nom}$	4			5			ms
t_{bo}	Brown-out time [4]	$V_{i\,nom}$, $I_{o\,nom}$	4			5			
t_{su}	Start-up time	$V_{i\,nom}$, $I_{o\,nom}$		150	200			1500	

Table 2b: Input data of CPA models

Model			CPA200/250			CPA500/550			Unit
Characteristics		**Conditions**	**min**	**typ**	**max**	**min**	**typ**	**max**	
V_i	Rated input voltage range	$I_o = 0 – I_{o\,nom}$	100		240	100		240	VAC [1]
$V_{i\,op}$	Operating input voltage	$T_{C\,min} – T_{C\,max}$	90		264	90		264	
$V_{i\,nom}$	Nominal input voltage	50 - 60 Hz [1]		230			230		
$V_{i\,abs}$	Input voltage limits	≤60 s, no damage	0		280	0		280	
I_i	Typical input current	$V_{i\,nom}$, $I_{o\,nom}$		1.1 / 1.4 [2]			2.8 / 3.1 [3]		A
$I_{i\,max}$	Max input current	$V_{i\,min}$, $I_{o\,nom}$		2.9 / 3.6 [2]	3.2 / 4.0 [2]		7.1 / 7.8 [3]		
$I_{inr\,p}$	Peak inrush current	$V_{i\,nom}$, $I_{o\,nom}$			15			20	
$P_{i\,0}$	No-load input power	$V_{i\,min} – V_{i\,max}$, $I_o = 0$		23	30		26	32	W
$P_{i\,inh}$	Input power when inhibited	$V_{i\,min} – V_{i\,max}$			3.2			3.2	
C_i	Input capacitance			1			4		µF
f_{switch}	Switching frequency	$V_{i\,nom}$, $I_{o\,nom}$		135			135		kHz
t_h	Hold-up time	$V_{i\,min} \rightarrow 0$ V, $I_{o\,nom}$	20			20			ms
t_{bo}	Brown-out time [4]	$V_{i\,nom}$, $I_{o\,nom}$							
t_{su}	Start-up time	$V_{i\,nom}$, $I_{o\,nom}$		150			150		
	Power factor	$V_{i\,nom}$, $I_{o\,nom}$	0.95			0.95			W/VA

1 Rated input frequency: 50 – 60 Hz, operating input frequency range: 47 – 63 Hz
2 First value for CPD/CPA200, 2nd value for CPD/CPA250
3 First value for CPA500, 2nd value for CPA550
4 Short interruption of V_i without affecting the outputs (EN 61000-4-11)

© 2025 Bel Fuse Inc. BCD20005-G_AR 20 May 2025

Input Fuse and Reverse Polarity Protection

A metal oxide varistor (voltage dependent resistor VDR) together with the input filter form an effective protection against high input voltage transients, which typically occur in most installations.

An incorporated fuse protects the converter against further damage in the case of a failure.

Note: The fuse is not customer-accessible.

Table 3: Fuse specification

Model	Fuse rating	Reference
CDP200/250	250 V, 12.5 A T	Schurter SPT 5x20, 0001.2515
CPA200/250	250 V, 5 A T	Schurter SPT 5x20, 0001.2511
CPD500	80 V, 25 A F	Littlefuse FKS, 166.7000.525
CPA500/550	250 V, 10 A T	Schurter MXT250, 0034.6925

To avoid unwanted power losses, the CPD200/250 models are not protected against reverse polarity at the input by a serial diode, but only with an antiparallel diode. In the case of reversed input voltage, the input fuse will blow; however no further damage will occur.

The CPD500 models are protected against reverse polarity by a special circuitry, which generates no losses. The converter will simply not start-up, but no damage will occur.

The CPA Series converters are designed for AC input and have a rectifier bridge on the input.

Input Current Limitation

All converters incorporate an active inrush current limiter in the input circuitry, which reduces the peak inrush current value by a factor of 10 – 15 to protect connectors and switching devices from damage.

Note: The inrush current limitation is achieved using electronic circuitry. For effective limitation the converter should not be switched on and off more frequently than every 8 seconds.

Input Undervoltage Shutdown

CPD200/250 models start at approx. V_i = 22 V, when the input voltage is applied; at decreasing V_i, they switch off at approx. 21 V.

Note: The input current I_i may exceed $I_{i\,max}$, if $V_i \leq V_{i\,min}$.

CPD500 models start at V_i = 35 V and switch off at V_i = 33 V.

CPA models exhibit an undervoltage trigger controlling start-up and shutdown. The threshold is between 80 and 90 VAC. See also *Power Fail Signal*.

Note: CPA200/250 with version ≤ V116 should not be operated at $V_i \leq V_{i\,min}$, as these models have no undervoltage shutdown and will therefore operate with a high input current at full load.

Efficiency

The efficiency is specified in table 1. Its dependence upon the input voltage V_i is shown in fig. 2a (CPA models) and fig. 2b (CPD500 models). The efficiency of CPD200/250 models depends only marginally upon V_i.

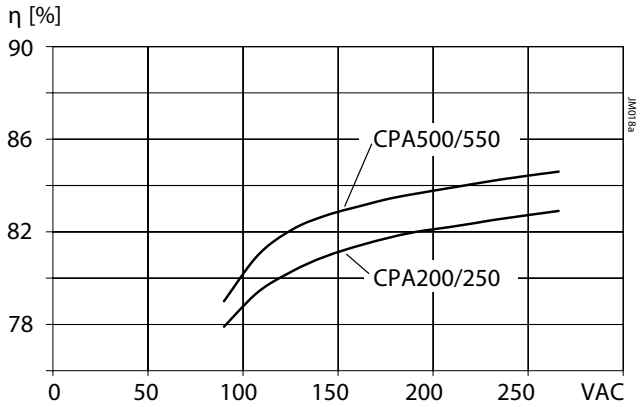

Fig. 2a
CPA Series: Efficiency versus input voltage

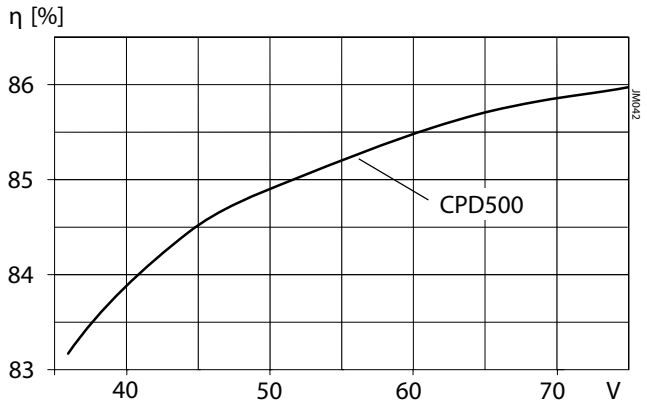

Fig. 2b
CPD500 Series: Efficiency versus input voltage

© 2025 Bel Fuse Inc. BCD20005-G_AR 20 May 2025

Compact PCI® CPA/CPD Series

200 – 550 Watt AC-DC & DC-DC Converters

MELCHER™

Electrical Output Data

General Conditions for table 4:

– T_A = 25 °C, unless T_c is specified.

– CPD/CPA200: 250 LFM (1.25 m/s), CPD/CPA250: 400 LFM (2 m/s)

– Sense lines connected directly at the connector

Table 4a: Output data of CPD/CPA200 and CPD/CPA250

Output				Vo1 (5.0 V)			Vo2 (3.3 V)			Unit
Characteristics			Conditions	min	typ	max	min	typ	max	
V_o	Output voltage		$V_{i\,nom}$, 50% $I_{o\,nom}$	4.95	5.0	5.05	3.25	3.3	3.35	V
$I_{o\,nom}$	Nominal output current				20 / 25 [1]			20		A
$I_{o\,max}$	Max. output current		$V_{i\,min} – V_{i\,max}$		40			40		A
I_{oL}	Output current limit		$T_{C\,min} – T_{C\,max}$			50			50	A
$I_{o\,min}$	Minimum load			no min. load required			no min. load required			A
V_o	Output voltage noise [4]	Switch. frequ.	$V_{i\,nom}$, $I_{o\,nom}$		20			20		mV_{pp}
		Total	BW = 20 MHz [4] C_{ext} = 22 µF + 100 nF		45	60		40	60	mV_{pp}
ΔV_{oV}	Static line regulation		$V_{i\,min} – V_{i\,max}$, $I_{o\,nom}$			±10			±10	mV
ΔV_{oL}	Static load regulation		$V_{i\,nom}$, 50 - 100% $I_{o\,max}$			±10			±10	mV
ΔV_{oS}	Overshoot at switch on/off				0			0		mV
$V_{o\,d}$	Dynamic load regulation	Voltage deviation	Vo1: ΔI_{o1} = 10 A, dI_{o1}/dt = 2 A/µs Vo2: ΔI_{o2} = 10 A, dI_{o2}/dt = 2 A/µs			±120			±120	mV
t_d		Recovery time			100			100		µs
α_{Vo}	Temperature coefficient of output voltage		$T_{C\,min} – T_{C\,max}$ $0 – I_{o\,nom}$, $V_{i\,min} – V_{i\,max}$		±0.3			±0.2		%/K

Table 4b: Output data of CPD/CPA200 and CPD/CPA250

Output				Vo3 (+12 V)			Vo4 (–12 V)			Unit
Characteristics			Conditions	min	typ	max	min	typ	max	
V_o	Output voltage		$V_{i\,nom}$, 50% $I_{o\,nom}$	11.76	12.0	12.24	-11.30	-12.0	-12.48	V
$I_{o\,nom}$	Nominal output current				2.5 / 4 [1]			0.5 / 1 [1]		A
$I_{o\,max}$	Max. output current		$V_{i\,min} – V_{i\,max}$		5.5			2		A
I_{oL}	Output current limit		$T_{C\,min} – T_{C\,max}$			7			3.5	A
$I_{o\,min}$	Minimum load			I_{o3} > 75% I_{o4} [2]			no min. load required			A
V_o	Output voltage noise [4]	Switch. frequ.	$V_{i\,nom}$, $I_{o\,nom}$							mV_{pp}
		Total	BW = 20 MHz [4] C_{ext} = 22 µF + 100 nF			120			120	mV_{pp}
ΔV_{oV}	Static line regulation		$V_{i\,min} – V_{i\,max}$, $I_{o\,nom}$			±10			±10	mV
ΔV_{oL}	Static load regulation		$V_{i\,nom}$, 50 - 100% $I_{o\,max}$			±30		-380 [3]		mV
ΔV_{oS}	Overshoot at switch on/off				0			0		mV
$V_{o\,d}$	Dynamic load regulation	Voltage deviation	Vo3: ΔI_{o3} = 2 A, dI_{o3}/dt = 2 A/µs Vo4: ΔI_{o4} = 0.5 A, dI_{o4}/dt = 2 A/µs			±200			±200	mV
t_d		Recovery time			500			500		µs
α_{Vo}	Temperature coefficient of output voltage		$T_{C\,min} – T_{C\,max}$ $0 – I_{o\,nom}$, $V_{i\,min} – V_{i\,max}$		±0.3			±0.5		%/K

[1] First value for CPD200/CPA200, second value for CPD250/CPA250
[2] Minimum load is only required to maintain regulation of output Vo4
[3] Droop characteristic for passive current sharing
[4] Measured with a probe according to IEC/EN 61204, annex A

© 2025 Bel Fuse Inc. BCD20005-G_AR 20 May 2025

Compact PCI® CPA/CPD Series

200 – 550 Watt AC-DC & DC-DC Converters

General conditions for table 5:

– T_A = 25 °C, unless T_c is specified.

– CPD500, CPA500: 300 LFM (1.5 m/s), CPA550: 400 LFM (2 m/s)

– Sense lines connected directly at the connector

Table 5a: Output data of CPD500 and CPA500/550

Output				Vo1 (5.0 V)			Vo2 (3.3 V)			Unit
Characteristics			Conditions	min	typ	max	min	typ	max	
V_o	Output voltage		$V_{i\,nom}$, 50% $I_{o\,nom}$	4.95	5.0	5.05	3.25	3.3	3.35	V
$I_{o\,nom}$	Nominal output current				40 / 50 [1]			50 / 50 [1]		A
$I_{o\,max}$	Max. output current		$V_{i\,min} – V_{i\,max}$ $T_{C\,min} – T_{C\,max}$		50			60		A
I_{oL}	Output current limit			52.2		62	63		74	A
$I_{o\,min}$	Minimum load				no min. load required			no min. load required		A
V_o	Output voltage noise [2]	Switch. frequ.	$V_{i\,nom}$, $I_{o\,nom}$ BW = 20 MHz [2] C_{ext} = 22 µF + 100 nF							mV_{pp}
		Total				50			50	mV_{pp}
ΔV_{oV}	Static line regulation		$V_{i\,min} – V_{i\,max}$, $I_{o\,nom}$			±10			±10	mV
ΔV_{oL}	Static load regulation		$V_{i\,nom}$, 50 - 100% $I_{o\,max}$			±10			±10	mV
ΔV_{oS}	Overshoot at switch on/off				0			0		mV
$V_{o\,d}$	Dynamic load regulation	Voltage deviation	Vo1: ΔI_{o1} = 20 A, dI_{o1}/dt = 2 A/µs Vo2: ΔI_{o2} = 40 A, dI_{o2}/dt = 2 A/µs			±150			±150	mV
t_d		Recovery time			300			300		µs
α_{Vo}	Temperature coefficient of output voltage		$T_{C\,min} – T_{C\,max}$ $0 – I_{o\,nom}$, $V_{i\,min} – V_{i\,max}$		±0.3			±0.2		%/K

Table 5b: Output data of CPD500 and CPA500/550

Output				Vo3 (+12 V)			Vo4 (–12 V)			Unit
Characteristics			Conditions	min	typ	max	min	typ	max	
V_o	Output voltage		$V_{i\,nom}$, 50% $I_{o\,nom}$	11.76	12.0	12.24	-11.52	-12.0	-12.48	V
$I_{o\,nom}$	Nominal output current				8			3		A
$I_{o\,max}$	Max. output current		$V_{i\,min} – V_{i\,max}$ $T_{C\,min} – T_{C\,max}$		12			4		A
I_{oL}	Output current limit				13.5			4.3		A
$I_{o\,min}$	Minimum load				no min. load required			no min. load required		A
V_o	Output voltage noise [2]	Switch. frequ.	$V_{i\,nom}$, $I_{o\,nom}$ BW = 20 MHz [2] C_{ext} = 22 µF + 100 nF							mV_{pp}
		Total				120			120	mV_{pp}
ΔV_{oV}	Static line regulation		$V_{i\,min} – V_{i\,max}$, $I_{o\,nom}$			±10			±10	mV
ΔV_{oL}	Static load regulation		$V_{i\,nom}$, 50 - 100% $I_{o\,max}$			±50		-220 [3]		mV
ΔV_{oS}	Overshoot at switch on/off				0			0		mV
$V_{o\,d}$	Dynamic load regulation	Voltage deviation	Vo3: ΔI_{o3} = 4 A, dI_{o3}/dt = 2 A/µs Vo4: ΔI_{o4} = 1 A, dI_{o4}/dt = 2 A/µs			±200			±150	mV
t_d		Recovery time			300			300		µs
α_{Vo}	Temperature coefficient of output voltage		$T_{C\,min} – T_{C\,max}$ $0 – I_{o\,nom}$, $V_{i\,min} – V_{i\,max}$		±0.3			±0.5		%/K

[1] First value for CPA500, second value for CPA550
[2] Measured with a probe according to IEC/EN 61204, annex A
[3] Droop characteristic for passive current sharing

© 2025 Bel Fuse Inc. BCD20005-G_AR 20 May 2025

Hold-up Time of CPD Models

For extended hold-up time of CPD models, use external output capacitors or decoupling diodes and input capacitors of adequate size.

Formula for additional external input capacitor:

$$C_{i\,ext} = \frac{2 \cdot P_o \cdot (t_{h\,total} - t_h) \cdot 100}{\eta \cdot (V_{ti}^2 - V_{i\,min}^2)}$$

whereas:

$C_{i\,ext}$ = external input capacitance [mF]
P_o = output power [W]
η = efficiency [%]
$t_{h\,total}$ = total hold-up time [ms]
t_h = hold-up time [ms]
$V_{i\,min}$ = minimum input voltage [V]
V_{ti} = threshold level [V]

Note: After V_i was removed, the outputs maintain their voltage for the time t_h. Even if V_i comes back during t_h, but after t_h, the output voltage might be affected.

Redundant Operation and Hot Swap

Due to the integrated ORing FETs/diodes, the converters are designed to be operated in redundant systems.

Hot swap is also possible, but the output voltages of each bus may deviate dynamically by ≤5% during the plug-in / plug-out operation.

Note: We recommend connecting some capacitors parallel to the bus to limit voltage deviations during hot swapping and during switch-on / switch-off of the input voltage of one of the parallel-connected converters.

Output Characteristic and Protection

All outputs are fully protected against continuous open-circuit (no load) and continuous short-circuit conditions.

All outputs of CPx200/250 models have a constant current limitation with a rectangular characteristic; see figure 3. In addition, the total power from outputs Vo1, Vo2, and Vo3 is limited to $P_{o\,max}$, resulting in a free choice of load distribution between these outputs. Output Vo4 is disabled in the case of overtemperature generated by overcurrent.

In CPA500/550 and CPD500 models, the total power of all four outputs is limited to $P_{o\,max}$.

In all models, all outputs are monitored for an overvoltage condition. If an overvoltage of 120 – 130% is detected, the converter is permanently disabled. To reset, the input voltage must be removed for 10 – 20 seconds.

Note: The models CPA500/550 with version number before V110 need approx. 60 s to recover.

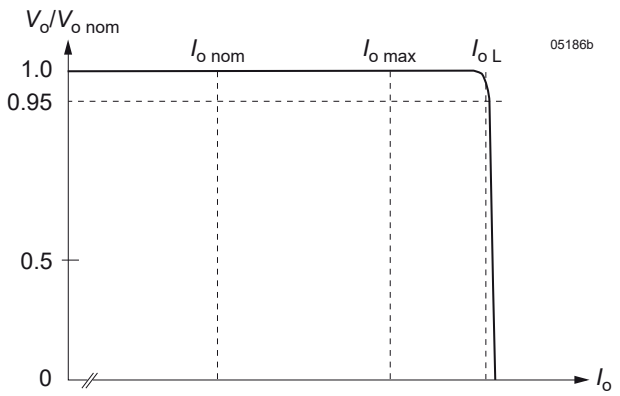

Fig. 3
Typical output characteristic V_o versus I_o

© 2025 Bel Fuse Inc. BCD20005-G_AR 20 May 2025

Thermal Considerations and Protection

If a converter is mounted in the upright position with airflow as specified in the general conditions of the tables 4 and 5, allowing unrestricted forced-air cooling, and is operated at its nominal input voltage and power at maximum ambient temperature $T_{A\,max}$ (see *Temperatures*), the temperature at the measurement point of the case temperature T_C (see *Mechanical Data*) will approach after an initial warm-up phase the indicated maximum value of $T_{C\,max}$ (105 °C). However, the relationship between T_A and T_C depends heavily on the operating conditions and the system integration. The thermal conditions are significantly influenced by the input voltage, the output current, the airflow, and the temperature of the adjacent elements and surfaces. $T_{A\,max}$ is therefore, contrary to $T_{C\,max}$, an indicative value only.

Caution: The installer must ensure that under all operating conditions T_C remains within the limits shown in the diagrams fig. 4.

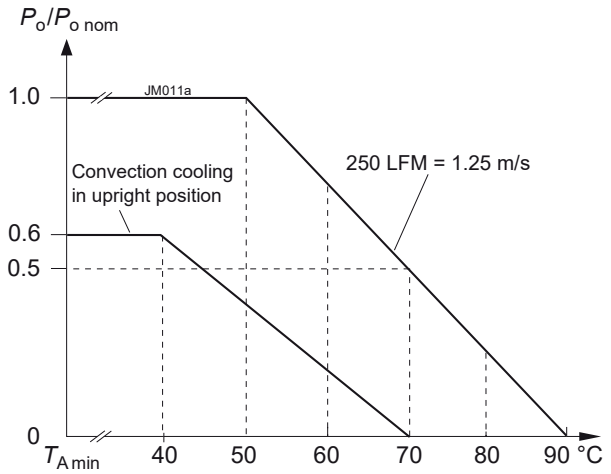

Fig. 4a
Output power versus temperature T_A at $V_{i\,nom}$ (CPD/CPA200)

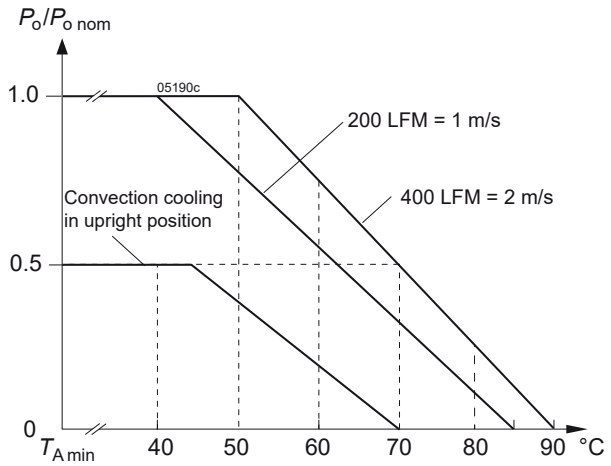

Fig. 4b
Output power versus temperature T_A at $V_{i\,nom}$ (CPD/CPA250)

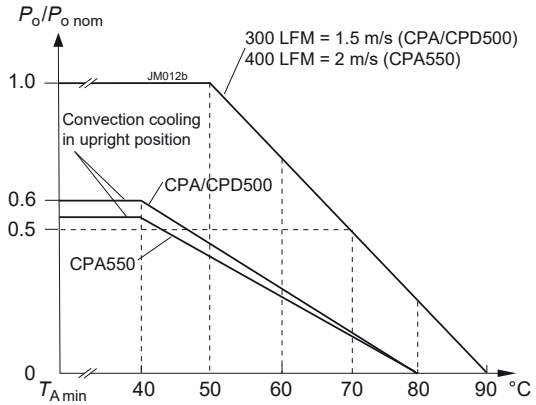

Fig. 4c
Output power versus T_A at $V_{i\,nom}$ (CPA500/550, CPD5

Note: Forced-air cooling (or an additional heat sink on customer-specific models) can improve the reliability or allow for higher T_A, as shown in the diagrams fig. 4, but $T_{C\,max}$ shall never be exceeded.

A temperature sensor fitted on the main PCB provides approx. 20 °C below $T_{C\,max}$ a warning signal (DEG#), at which the control logic begins to reduce the output power. The output power returns to the normal value, when the temperature drops back below this limit; see *Temperature Warning and Shutdown.*

© 2025 Bel Fuse Inc. BCD20005-G_AR 20 May 2025

Output Filter

The output ripple voltage can be reduced by an external filter to less then 5 mV_{pp}. Recommended values:

- C1, C2: Low ESR capacitor, e.g., OS-CON 100 – 470 µF
- L1, L2: Choke 1 – 4.7 µH with appropriate rated current, e.g., Coiltronics® HC2LP 1 µH /33 A or 2.2 µH /24 A.

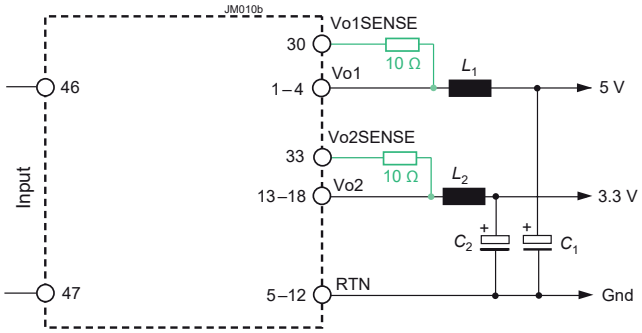

Fig. 5
Output filter reducing the output ripple of Vo1 and Vo2. An alternative solution is shown in green.

Auxiliary Functions

Inhibit and Enable

The inhibit input INH# enables (logic high) or disables (logic low, pull down) all outputs, when a logic signal (TTL, CMOS) is applied. In systems consisting of several converters this feature may be used to control the activation sequence of the converters or to enable the source to start-up, before full load is applied. When INH# is low, the converter cannot be activated by the EN# pin

Note: If this function is not used, the inhibit pin 39 can be left open-circuit (not connected). If pin 39 is connected to a return pin (e.g. pin 22), the internal logic will disable all outputs. The inhibit input is protected by a decoupling diode.

EN# (pin 27) is CMOS-compatible. However, we recommend to connect it directly with a return pin (e.g. pin 22) to enable the converter. Pin 27 is shorter than the others, ensuring start-up only, after all other pins were connected to the system. This provides true hot-swap capability.

Note: When a CPA or CPD500 converter is disabled by INH# and/or EN#, the PFC booster remains active, keeping the boost capacitor C_b (fig. 1) charged. As a result, there is no inrush current at restart.

Note: When a CPD 500/550 converter is disabled, on outputs 3 and 4 may appear a little voltage under no-load condition. This can be avoided by a small preload.

Table 6: Inhibit characteristics

Characteristics			Conditions	min	typ	max	Unit
V_{inh}	Inhibit voltage	V_o = on	$V_{i\,min}$ – $V_{i\,max}$	-2		0.8	V
		V_o = off		2.4		50	
t_r	Rise time					120	ms
t_d	Delay time			depending on I_o			

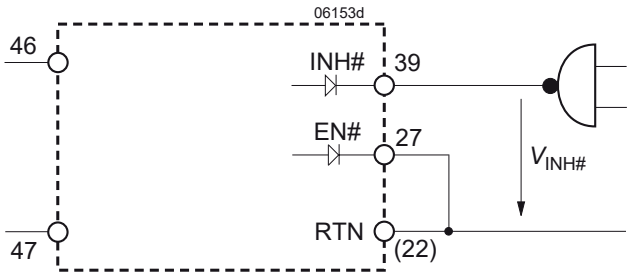

Fig. 6
Inhibit and enable inputs

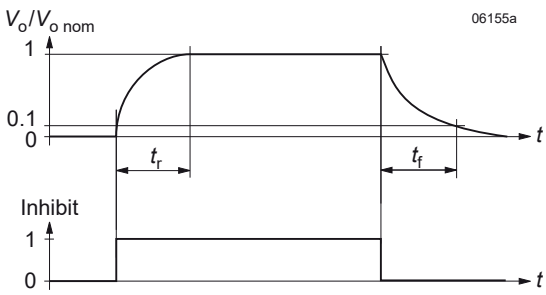

Fig. 7
Typical output response as function of inhibit voltage.

© 2025 Bel Fuse Inc. BCD20005-G_AR 20 May 2025

Temperature Warning and Shutdown

A temperature warning circuitry monitors the case temperature T_C. Its output signal $V_{DEG\#}$ changes from high to low impedance, when the T_C exceeds the upper threshold level, and changes back to high impedance, when T_C falls below the lower threshold level, which is 85 °C ± 5 °C.

Pin 38 (degrade signal DEG#) is internally connected via the collector-emitter path of an NPN transistor to the signal return pin 22. The current $I_{DEG\#}$ through pin 38 should not exceed 40 mA, and $V_{DEG\#}$ should not exceed 40 V.

If T_C exceeds 105 °C, the converter will be disabled. It resumes operation automatically, once T_C falls below 105 °C.

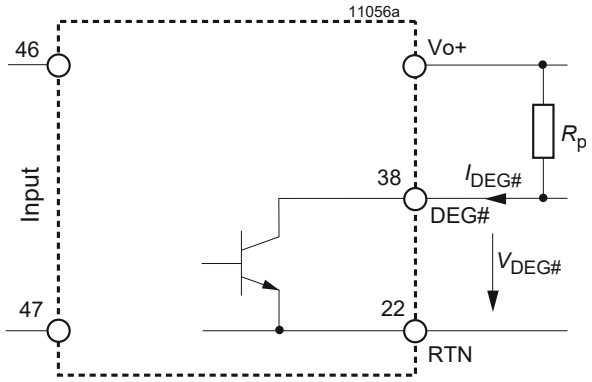

Fig. 8
Degrade signal: NPN output $V_{DEG\#} \leq 40$ V, $I_{DEG\#} \leq 20$ mA

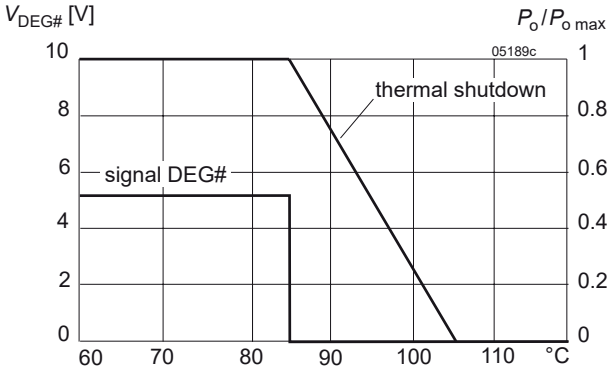

Fig. 9
Degrade signal $V_{DEG\#}$ versus case temperature T_C

Power Fail Signal

The power fail circuitry monitors the input voltage V_i and all output voltages. The signal $V_{FAL\#}$ changes from high to low impedance (<0.5 V), when one of the monitored voltages falls below the threshold. $V_{FAL\#}$ changes back to high impedance, when all monitored voltages exceed their threshold level.

The threshold level for V_o corresponds to approx. 90% of $V_{o\ nom}$.

The threshold levels for V_i correspond to approx. 34 V for CPD models and 80 – 90 VAC for CPA models.

Note: CPD200/250 (and CPA200/250 up to version V116) provide only the signal FAL#, but the converter is not inhibited.

Note: $V_{i\ min}$ of CPA models is considered as insufficient, when V_i remains for typ. 30 ms below $\sqrt{2} \cdot V_{i\ min}$.

Connector pin 42 (signal $V_{FAL\#}$) is internally connected via the drain-source path of a JFET (self-conducting type) to the signal return pin 22. The current $I_{FAL\#}$ should not exceed 10 mA. $V_{FAL\#}$ should not exceed 40 V, as the JFET is not protected against overvoltage.

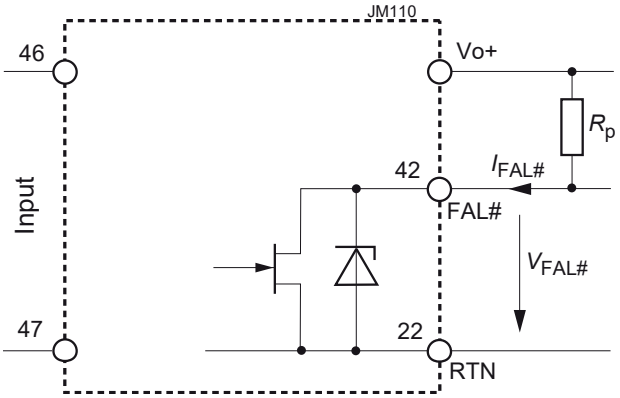

Fig.10
Power Fail: JFET output, $I_{FAL\#} \leq 10$ mA

© 2025 Bel Fuse Inc. BCD20005-G_AR 20 May 2025

Sense Lines

This feature is available only for the outputs Vo1, Vo2, Vo3, and allows the compensation of voltage drops across the connector contacts and if necessary, across the load lines.

To ensure correct operation, all sense lines S+ (Vo1SENSE, Vo2SENSE, and Vo3SENSE) should be connected to the respective power outputs. The common sense return S– (SRTN) should be connected to RTN (pin 5 – 12).

Note: Open sense lines are admissible, but the output voltage regulation will be poor.

The voltage difference between any sense line at its respective power output pin (as measured on the connector) should not exceed the following values.

Note: If the sense lines S+ and S– compensate for a considerable voltage drop, the output loads shall be reduced in order to respect the maximum output power.

Table 7: Sense line data

Output [V]	Total voltage difference between sense lines and their respective outputs
3.3	0.8 V
5	1 V
12	1 V

Active Current Sharing for Vo1, Vo2, Vo3

The current share facility, consisting of a single-wire link, should be used, where several converters are operated in parallel connection, for example, high reliability n+1 redundant systems or systems providing higher output power.

Note: Maximum six converters can be connected in parallel.

Using this feature reduces the stress of the individual converters and improves the reliability of the system. Interconnection of the current sharing terminals causes the converters to share the output current evenly. In n+1 redundant systems a failure of a single converter will not lead to a system failure, since the outputs are already decoupled by FETs and diodes internally.

Passive Current Sharing for Vo4

The output voltage changes slightly with the output current (droop characteristic) ensuring automatic current sharing without further precautions when several converters are connected in parallel. An increase in output current decreases the output voltage according to fig. 11.

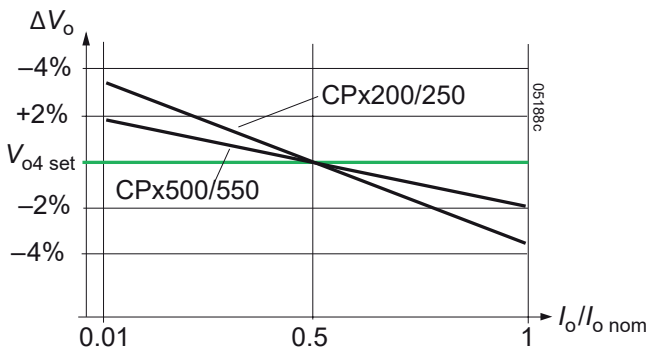

Fig. 11
Output voltage V_{o4} versus output current I_{o4}.

© 2025 Bel Fuse Inc. BCD20005-G_AR 20 May 2025

LEDs

A green LED “Input OK” and a red LED “Fault” are incorporated in the front panel.

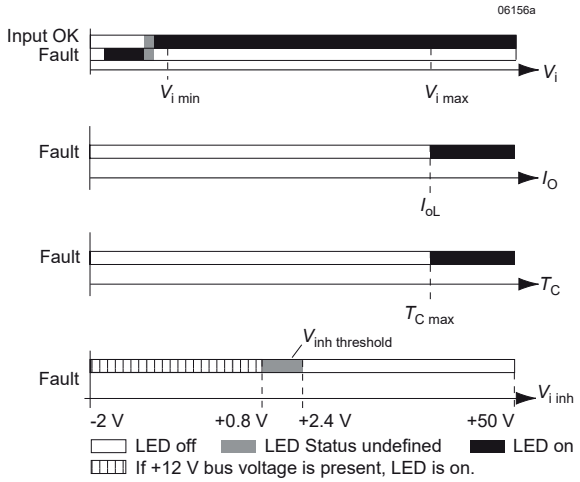

LEDs “Input OK” and “Fault” status versus input voltage.
Conditions: $P_o – P_{o\,max}$, $T_C – T_{C\,max}$, V_{inh} = open

LED “Fault” status versus output current.
Conditions: $V_{i\,min} – V_{i\,max}$, $T_C – T_{C\,max}$, V_{inh} = open

LED “Fault” status versus case temperature.
Conditions: $P_o – P_{o\,max}$, $V_{i\,min} – V_{i\,max}$, V_{inh} = open

LED “Fault” status versus V_{inh}.
Conditions: $P_o – P_{o\,max}$, $V_{i\,min} – V_{i\,max}$, $T_C – T_{C\,max}$

Fig. 12
Display status of LEDs

Electromagnetic Compatibility (EMC)

A metal oxide VDR together with the input fuse and a filter form an effective protection against high input voltage transients, which typically occur in most installations. The converters have been successfully tested to the following specifications:

Electromagnetic Immunity

Electromagnetic compatibility (Type test) complies with EN 61000-6-2:2005/AC:2005.

Table 8: Electromagnetic immunity (type tests).

Phenomenon	Standard	Level	Coupling mode [1]	Value applied	Waveform	Source imped.	Test procedure	In oper.	Perf. crit. [2]
Electrostatic discharge (to case)	IEC/EN 61000-4-2	4	contact discharge	8000 V_p	1/50 ns	330 Ω	10 pos. & 10 neg. discharges	yes	A
			air discharge	15000 V_p					
Electromagnetic field	IEC/EN 61000-4-3	3	antenna	10 V/m	AM 80% / 1 kHz	N/A	80 – 1000 MHz	yes	A
				10 V/m	50% duty cycle 200 Hz repetition frequency	N/A	900 ±5 MHz	yes	A
Electrical fast transients / burst	IEC/EN 61000-4-4	2	capacitive, o/c	1000 V_p	bursts of 5/50 ns; 2.5 / 5 kHz over 15 ms; burst period: 300 ms	50 Ω	60 s positive 60 s negative transients per coupling mode	yes	A
		3	±i/c, +i/–i direct	2000 V_p					
Surges	IEC/EN 61000-4-5	3	i/c	2000 V_p	1.2 / 50 µs	12 Ω	5 pos. & 5 neg. surges per coupling mode	yes	B
			+i/–i	1000 V_p		2 Ω			
Conducted disturbances	IEC/EN 61000-4-6	3	i, o, signal wires	10 VAC (140 dBµV)	AM 80% / 1 kHz	150 Ω	0.15 – 80 MHz	yes	A

[1] i = input, o = output, c = case connected to PE ⏚
[2] A = normal operation, no deviation from specifications, B = normal operation, temporary loss of function or deviation from specs possible.

© 2025 Bel Fuse Inc. BCD20005-G_AR 20 May 2025

Power Factor

The CPA models exhibit a booster providing a correction of the power factor (PFC). The power factor is better when the input voltage is low.

Table 9: Electromagnetic emissions for CPA models.

Phenomenon	Standards	Conditions	Results
Harmonics	EN 61000-3-2: 2014	V_i = 230 V, $V_{o\ nom}$, $I_{o\ nom}$	Class A
Voltage fluctuation and flicker	EN 61000-3-3: 2013	V_i = 230 V, $V_{o\ nom}$, $I_{o\ nom}$	Class A

© 2025 Bel Fuse Inc. BCD20005-G_AR 20 May 2025

Compact PCI® CPA/CPD Series

200 – 550 Watt AC-DC & DC-DC Converters

Electromagnetic Emissions

Conducted and radiated emissions comply with EN 55011:2016/A1:2017, Group1, Class A

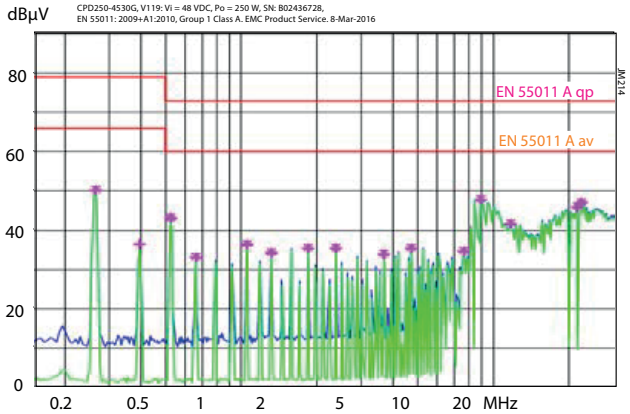

Fig. 13a
CPD250: Typical disturbance voltage (peak) at line input according to EN 55011, measured at $V_{i\ nom}$ and $P_{o\ nom}$.

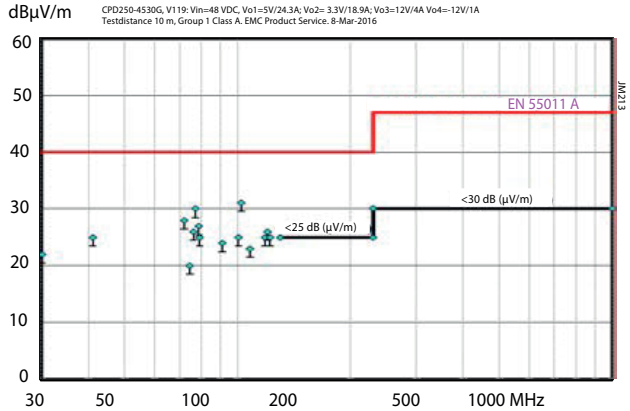

Fig. 13b
CPD250 : Radiated emissions according to EN 55011, measured at $V_{i\ nom}$ and $P_{o\ nom}$.

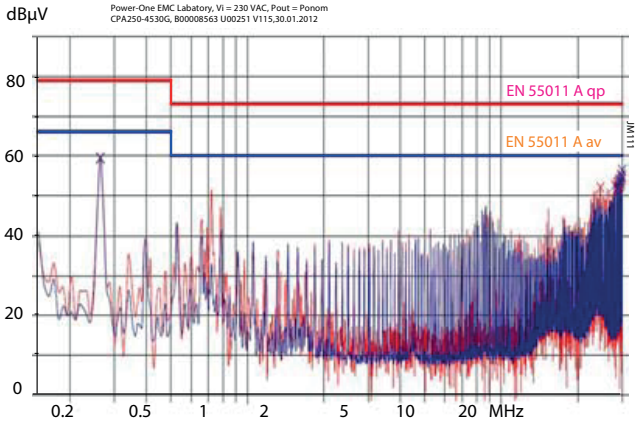

Fig. 14a
CPA250-4530: Typical disturbance voltage at line input according to EN 55011, measured at $V_{i\ nom}$ and $P_{o\ nom}$.

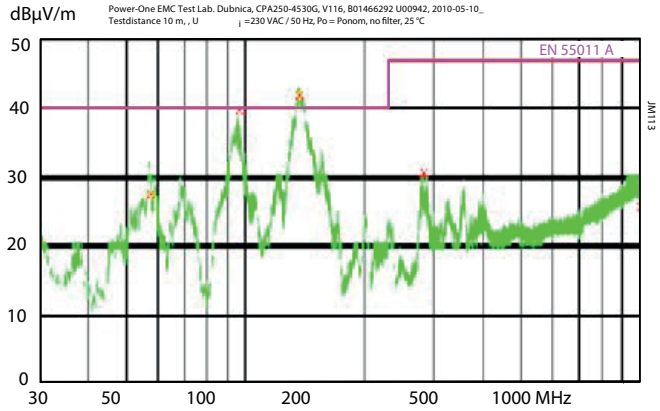

Fig. 14b
CPA250-4530: Typical disturbance voltage at line input according to EN 55011, measured at $V_{i\ nom}$ and $P_{o\ nom}$.

To improve related emission results, use a ferrite core on the Iinput wires, of type Kitagawa GRFC-10 or equivalent. Fig. 14c shows that EN 55011, class A is kept. This is a condition for the CCC approval.

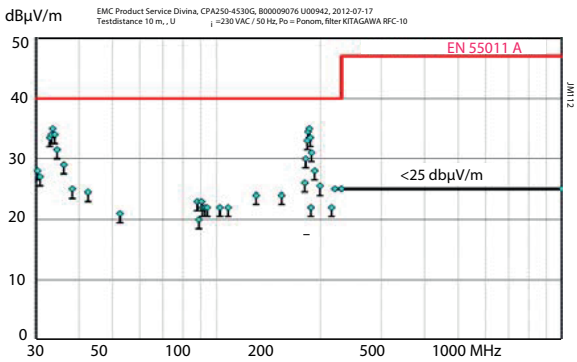

Fig. 14c
CPA250-4530 with a core across the input lines.
Radiated emissions EN 55011, measured at $V_{i\ nom}$ and $P_{o\ nom}$.

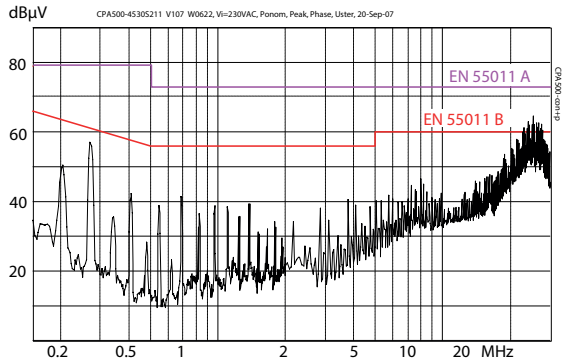

Fig. 15
CPA500-4530: Typical disturbance voltage (peak) at line input accord. to EN 55011, measured at $V_{i\ nom}$ and $P_{o\ nom}$

Note: Conducted and radiated emissions of CPD500 comply with EN 55011 class A (not shown).

© 2025 Bel Fuse Inc. BCD20005-G_AR 20 May 2025

Compact PCI® CPA/CPD Series

200 – 550 Watt AC-DC & DC-DC Converters

Immunity to Environmental Conditions

Table 10: Mechanical and climatic stress

Test method		Standard	Test Conditions		Status
Cab	Damp heat steady state	IEC/EN 60068-2-78	Temperature: Relative humidity: Duration:	$40^{\pm 2}$ °C $93^{+2/-3}$ % 56 days	Converter not operating
Ea	Shock (half-sinusoidal)	IEC/EN 60068-2-27	Acceleration amplitude: Bump duration: Number of bumps:	20 g_n 11 ms 18 (3 in each direction)	Converter operating
Eb	Bump (half-sinusoidal)	IEC/EN 60068-2-29	Acceleration amplitude: Bump duration: Number of bumps:	15 g_n 6 ms 6000 (1000 in each direction)	Converter operating
Fda	Random vibration wide band, reproducibility high	IEC/EN 60068-2-35 CPD200/250, CPA200/250	Acceleration spectral density: Frequency band: Acceleration magnitude: Test duration:	0.05 g_n^2/Hz 20 – 500 Hz 4.9 $g_{n\ rms}$ 3 h (1 h in each axis)	Converter operating
		IEC/EN 60068-2-35 CPD500, CPA500/550	Acceleration spectral density: Frequency band: Acceleration magnitude: Test duration:	0.01 g_n^2/Hz 20 – 500 Hz 2.2 $g_{n\ rms}$ 1.5 h (0.5 h in each axis)	Converter operating

Temperatures

Table 11: Temperature specifications, valid for an air pressure of 800 – 1200 hPa (800 – 1200 mbar)

Model			Relative humidity [2]		CPD500		Other models		Unit
Characteristics		Conditions	min	max	min	max	min	max	
T_A	Ambient temperature	Converter operating [1]	5%	95%	- 25	50	- 40 [3]	50	° C
T_C	Case temperature		5%	95%	- 40	105	- 40 [3]	105	
T_S	Storage temperature	Not operating	10%	95%	- 40	85	- 40	85	

[1] See *Thermal Considerations*
[2] Non condensing humidity
[3] For CPA200/250 version V117 (or later), CPD250 version V119 (or later), CPA500/550 version V110 (or later), else –25 °C. Increased output ripple at very low temperature.

Reliability

Table 12: MTBF

Ratings at specified case temperature	Model	Ground benign	Ground fixed		Ground mobile	Unit
		40 °C	40 °C	70 °C	50 °C	
MTBF acc. to MIL-HDBK-217F, notice 2	CPD250	288 000	59 000	33 000	27 000	h
	CPA250	279 000	57 000	31 000	33 000	
	CPA500	195 000	35 000	17 000	16 000	
Bellcore CIR SR-332-1	CPD500	100 000				

© 2025 Bel Fuse Inc. BCD20005-G_AR 20 May 2025

Compact PCI® CPA/CPD Series

200 – 550 Watt AC-DC & DC-DC Converters

MELCHER™

Mechanical Data

Dimensions in mm (inches)

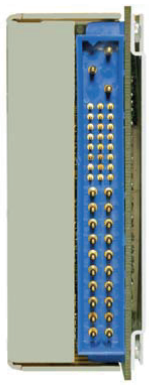

Fig. 16
View of the connector

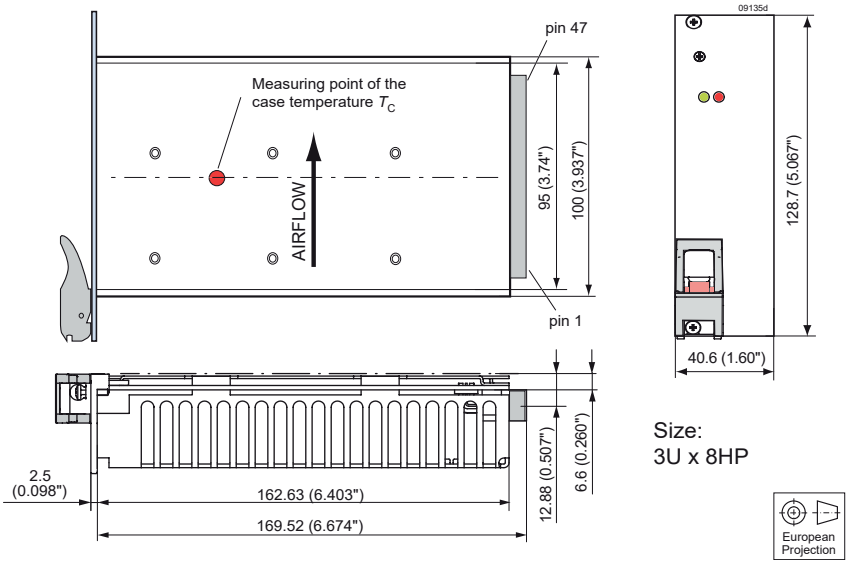

Fig. 17
CPA200/250 and CPD200/250.
Overall size (L x W x H): 172 x 40.6 x 128.7 mm, Weight: 0.8 kg

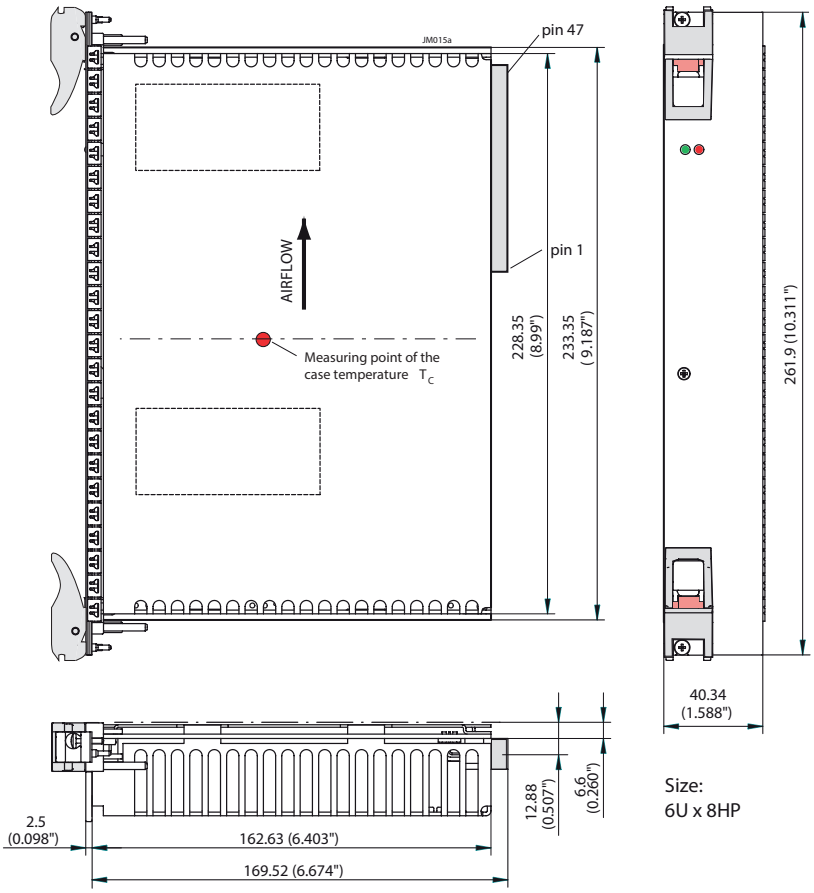

Fig. 18
CPD500 and CPA500/550.
Overall size (L x W x H): 172 x 40.6 x 261.9 mm, Weight: 1.65 kg

© 2025 Bel Fuse Inc. BCD20005-G_AR 20 May 2025

Safety and Installation Instructions

Connector Pin Allocation

The connector pin allocation table defines the electrical potentials and the physical pin positions on the Positronic connector. Pin no. 45 (protective earth) is a leading pin, ensuring that it makes contact with the female connector first.

Installation Instructions

These converters are components, intended exclusively for installation within other equipment by an industrial assembly process or by a professionally, competent person. Installation must strictly follow the national safety regulations in respect of the enclosure, mounting, creepage distances, clearance, casualty markings, and segregation requirements of the end-use application.

Connection to the system shall be made via the mating female connector (see fig. 16). Other installation methods may not meet the safety requirements. Check for hazardous voltage, before altering any connections.

Connector: Positronic PCIH47M400A1 or similar
Mating female connector: Positronic PCIH47F300A1 or similar

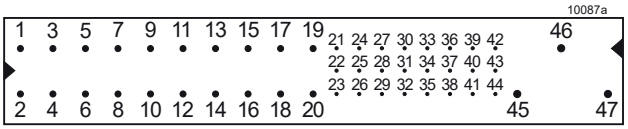

Fig. 19
Pinout of the front connector

Table 13: Pin allocation of the front connector

Pin [1]	Length [2]	Signal name	Description
1 - 4	B	Vo1	Output 1
5 - 12	B	RTN	Return (Vo1 and Vo2)
13 - 18	B	Vo2	Output 2
19	B	RTN	Return (Vo3)
20	B	Vo3	Output 3
21	C	Vo4	Output 4
22	C	RTN	Return
23	C	Reserved	Reserved
24	C	RTN	Return (Vo4)
25	C	n.c.	Do not connect
26	C	Reserved	Reserved
27	D	EN#	Enable
28	C	n.c.	Do not connect
29	C	n.c.	Do not connect
30	C	Vo1SENSE	Vo1 remote sense
31	C	n.c.	Do not connect

Pin [1]	Length [2]	Signal name		Description	
32	C	n.c.		Do not connect	
33	C	Vo2SENSE		Vo2 remote sense	
34	C	SRTN		Sense return	
35	C	Vo1SHARE		Vo1 current share	
36	C	Vo3SENSE		Vo3 remote sense	
37	C	n.c.		Do not connect	
38	C	DEG#		Degrade signal	
39	C	INH#		Inhibit	
40	C	n.c.		Do not connect	
41	C	Vo2SHARE		Vo2 current share	
42	C	FAL#		Fail signal	
43	C	n.c.		Do not connect	
44	C	Vo3SHARE		Vo3 current share	
45	A [3]	CGDN		Chassis ground	
46	A	+DCIN [4]	ACN [5]	Pos. DC input [4]	Neutral line [5]
47	A	-DCIN [4]	ACL [5]	Neg. DC input [4]	Line input (phase) [5]

1 Pin numbers shown are for the female backplane connector
2 A = very long pins, B = long pins, C = short pins, D = very short pins.
3 Pin 45 of the female connector is leading, ensuring that chassis ground makes contact first.
4 CPD models (DC input)
5 CPA models (AC input)

The converters are provided with a leading pin no. 45, which is reliably connected to the case. For safety reasons it is essential to connect this pin to the protective earth of the supply system.

The input –DCIN or ACL (pin no. 47) is internally fused; see *Input Fuse and Protection*. This fuse is designed to break an overcurrent in case of a malfunction of the converter and is not customer-accessible.

© 2025 Bel Fuse Inc. BCD20005-G_AR 20 May 2025

External fuses in the wiring to one or both input lines (pin 47 and/or pin 46) may be necessary to ensure compliance with local requirements. A built-in second fuse in the neutral line (pin 47) is available as option F for CPA500 models.

A second fuse in the wiring to the neutral line or option F may be needed if:

- Local requirements demand an individual fuse in each source line
- Neutral and earth impedance is high or undefined
- Phase and neutral of the mains are not defined or cannot be assigned to the corresponding terminals.

Caution:

Installation must strictly follow the national safety regulations.

Models with option F: Caution! Double-pole/neutral fusing.

Do not open the converters, or the warranty will be invalidated!

Important: If the inhibit function is not used, pin 39 (i) should be left open-circuit to enable the outputs. Enable Pin 27 (EN#) should be connected to pin 22 (RTN) to enable the outputs.

Make sure that there is sufficient airflow available for convection cooling. This should be verified by measuring the case temperature, when the converter is installed and operated in the end-use application. The maximum specified case temperature $T_{C\,max}$ should not be exceeded.

Make sure that a converter failure (e.g. by an internal short-circuit) does not result in a hazardous condition.

Standards and Approvals

The converters are safety-approved to the latetest edition of UL/CSA 60950-1 and IEC/EN 62368-1.

The converters correspond to Class I equipment. The following considerations have been made during design concerning safety:

- Build-in component
- Functional insulation between output(s) and case
- Use in a pollution degree 2 environment.
- A suitable fire enclosure shall be provided at end use.
- CPD-models: Basic insulation between input and case/output, based upon 75 VDC. The input is identified as TNV-2.
- CPA-models: Basic insulation between input and case, and double or reinforced insulation between input and output, based upon 250 VAC.
- CPA-models up to 60 Hz.

The converters are subject to manufacturing surveillance in accordance with the above mentioned standards.

Isolation

The electric strength test is performed in the factory as routine test in accordance with EN 62911 and IEC/EN 62368-1; see table 13. Only the test between input and [case+outputs], marked with footnotes 1 and 2, may be repeated by the customer.

Notes: The DC test voltage shall be slowly increased (within several seconds) and maintained for max. 2 seconds. Trigger level 25 µA. The factory is executing these tests with a reasonable margin, to guarantee its repetition.

Test with AC is not possible due to the incorporated Y caps. However, the standards allow testing with a corresponding DC voltage.

The Company will not honor warranty claims resulting from incorrectly executed electric strength tests.

Table 14: Isolation

Characteristics		CPD models		CPA models		Unit
		Input to (Case + Output)	Output to Case	Input to (Case + Output)	Output to Case	
Electric strength test	Factory test ≥1 s	1500 [1]	700	2200 [2]	700	VDC
	AC test voltage equivalent to factory test	1000 [1]	500	1500	500	VAC
Insulation resistance at 500 VDC		>300	>300	>300	>300	MΩ

[1] Sub-assemblies connecting input to output are pre-tested with ≥ 3 kVDC.
[2] Sub-assemblies connecting input to output are pre-tested with ≥ 4.3 kVDC or 3 kVAC.

© 2025 Bel Fuse Inc. BCD20005-G_AR 20 May 2025

Operation at >60 Hz and Leakage Currents

Operation up to 440 Hz is possible, but the X and Y caps are not safety-approved to this frequency. The efficiency decreases by approx. 2%, and the leakage currents are proportional higher.

Protection Degree and Cleaning Liquids

The converters correspond to protection degree IP 20, provided that the female connector is fitted.

The power supplies are not hermetically sealed. In order to avoid possible damage, any penetration of cleaning and other fluids shall be avoided.

Safety of Operator-Accessible Output Circuits

If the output circuit of a converter is operator- accessible, it shall be an ES1 circuit according to the IEC/EN 62368-1 related safety standards.

However, it is the sole responsibility of the installer to ensure the compliance with the relevant and applicable local safety regulations

Options

L: Output Current Latch

All CPA/CPD models exhibit a latching shutdown, which is activated if only one output voltage is too high; see *Output Characteristic and Protection.*

If option L is fitted, this latch is as well activated, if the current limit of one output is exceeded for approx. 0.5 s.

A: Face Plate without Logo

No logo is not printed to the front plate.

F: Built-in Second Fuse

Available for CPA500 models only. A 2nd fuse in the neutral input line provides safe phase to phase connection at low mains voltages (e.g., USA 120/208 V /60 Hz systems).

The built-in second fuse enables safe connection to the mains, where phase and neutral line are not defined, as e.g., in the case of plug and socket connection to the mains via German Schuko-plugs; see also *Safety and Installation Instructions*.

C: Protective Lacquer

All boards are covered by a protective lacquer.

G: RoHS

RoHS-compliant for all six substances. This feature is standard.

NUCLEAR AND MEDICAL APPLICATIONS - These products are not designed or intended for use as critical components in life support systems, equipment used in hazardous environments, or nuclear control systems.

TECHNICAL REVISIONS - The appearance of products, including safety agency certifications pictured on labels, may change depending on the date manufactured. Specifications are subject to change without notice.

Asia-Pacific +86 755 298 85888
EMEA +353 61 498 955
North America +1 866 513 2839
powersupport@belf.com
belfuse.com/power-solutions

© 2025 Bel Fuse Inc. BCD20005-G_AR 20 May 2025