Go Beyond Normal Limits...℠

RITRON®
WIRELESS SOLUTIONS

Ls Series

DTX-Ls Series Transceiver

A new embedded RF platform with enhanced performance and reliability.

- Narrow Band Compliant
- Ideal For OEM and Other Integrated Applications

MADE IN THE USA

DTX-445 and DTX-145

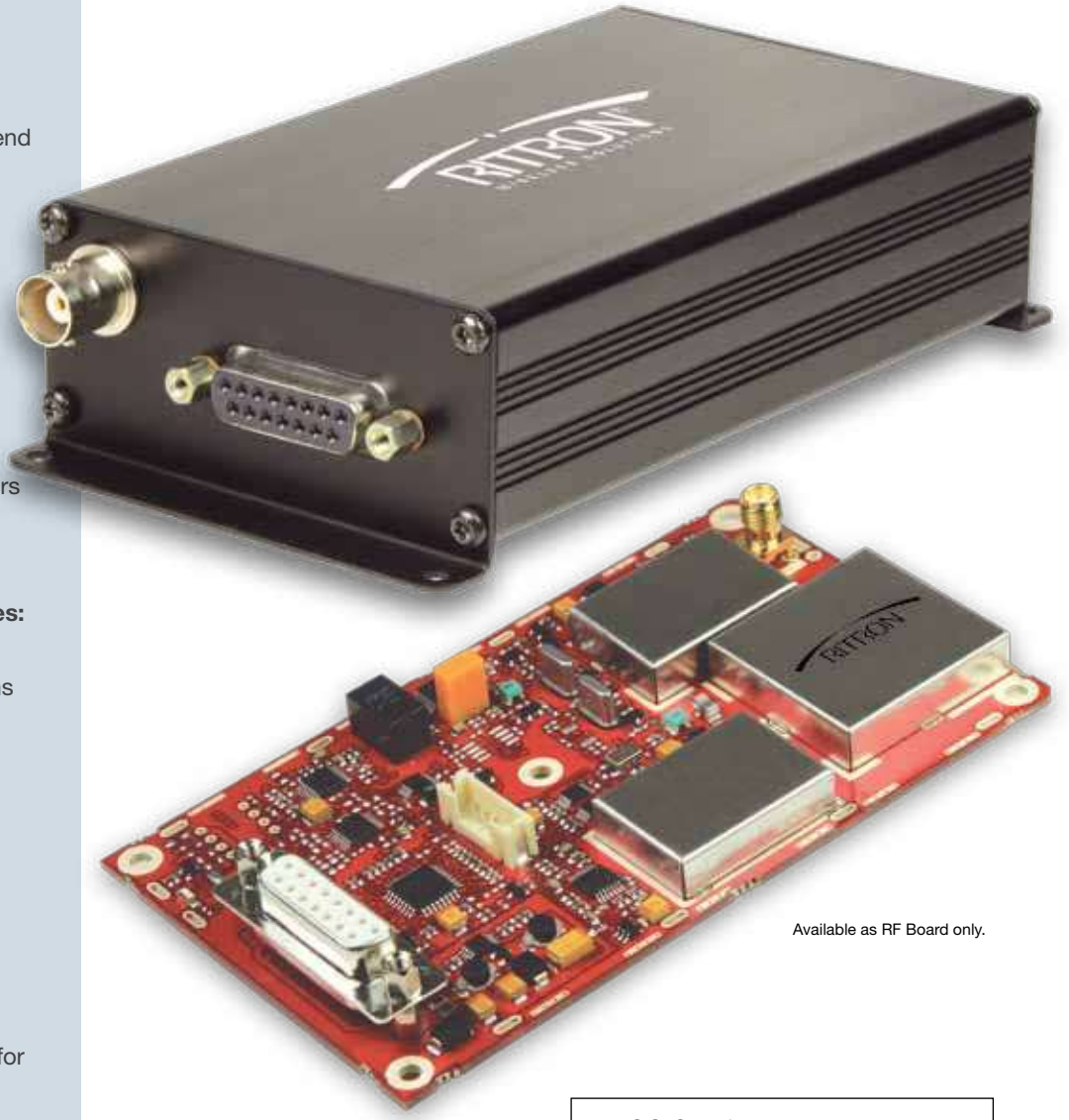

Available as RF Board only.

Features/Benefits:

- All electronic tuning (no mechanical adjustments)
- Same mechanical footprint and electrical interface as the current DTX-Ls (allows drop-in backwards compatibility)
- Available in 2 to 8 Watt UHF Models and 2 to 5 Watt VHF
- Supports voice or data applications
- Supports sub-audible signaling CTCSS or Digital Coded Squelch
- PC programmable via a Windows-based PC programmer
- All components placed on the top side of a single PCB for mechanical rigidity and increased protection against damage
- Solid internal ground plane for enhanced EMI shielding
- Surface acoustic wave (SAW) filter front-end for no-drift, adjustment-free filtering of interfering signals (DTX-445)
- Monolithic Gilbert cell mixer with internal negative feedback for improved RF intermodulation performance
- Ritron exclusive flex-divider PLL synthesizer allows for a wide loop bandwidth for fast transmit and receive attack times and minimal microphonics
- Audiophile-grade polypropylene capacitors in the PLL loop filter for further reduced microphonic susceptibility

Plus These Established DTX Ls Features:

- Low standby current drain facilitates long battery life in battery powered applications
- High receiver sensitivity
- Single board design for high reliability
- Ritron's made in the USA design, manufacturing, and service expertise
- FCC Narrow Band Compliant and Industry Canada approved module (board only or with enclosure), allows for easier integration into OEM applications without regulatory concerns
- Various connector/module options allow for flexibility in OEM integration

FCC Certified RF Transceivers
(with enclosure or as board only)

Reliable and Feature Rich.

RF Transceivers, Radio Modems and Specialized Wireless Communication Equipment for OEM and Integrator Applications – Since 1977.

GENERAL SPECIFICATIONS	UHF DTX-445	VHF DTX-145
FCC ID:	AIERIT17-445	AIERIT17-145
Industry Canada ID:	1084A-RIT17445	1084A-RIT17145
FCC Rule Parts:	90	
Industry Canada Rule Parts:	RSS-119	
Frequency Range:	400.6 – 416.5†, 411 – 429†, or 450 - 470 MHz	136 to 174 MHz
RF Channels:	8 Independent TX/RX frequencies	
Synthesizer Step:	6.25kHz	2.5kHz
Channel Spacing:	12.5kHz	
Frequencies unusable:	TBD	
Frequency Stability:	+/-1.5 PPM (-30° to +60° C)	+/-2.5 PPM (-30° to +60° C)
Tone/Code Signaling:	CTCSS (Quiet Call) and DCS	
Power Supply:	9 to 17 VDC	
Dimensions & weight:	Board only version: 4.75" x 2.8"x .625" / 2.1 oz Encased version: 5.7"x 3"x 1.375" / 7.3 oz.	
Antenna Fitting:	BNC female with encased version. Other options available on board only version.	

† pending model

RECEIVER	*25 kHz Wide band	12.5 kHz Narrow band	*25 kHz Wide band	12.5 kHz Narrow band
Sensitivity (12 dB SINAD):	0.25 µV	0.25 µV	.25uV	.25uV
Adjacent channel:	-67 dB	-60 dB	-67dB	-60dB
Spurious rejection:	-70 dB	-70 dB	-65dB	-65dB
Image rejection:	-75 dB	-75 dB	-70dB	-70dB
Intermodulation:	-67 dB	-67 dB	-67dB	-67dB
FM hum and noise:	-43 dB	-37 dB	-43dB	-37dB
Conducted spurious:	-57 dBm	-57 dBm	-57dB	-57dB
Receiver attack time (TX to RX):	< 10 ms	< 10 ms	< 10 ms	< 10 ms
Noise squelch attack time: (for 20 dB quieting)	< 15 ms	< 15 ms	< 15 ms	< 15 ms
RSSI squelch attack time:	< 5 ms	< 5 ms	< 5 ms	< 5 ms
RSSI squelch sensitivity:	PC adjustable; factory set for –106 dBm			
Noise squelch sensitivity:	PC adjustable; factory set for –121 dBm			
AUX OUT frequency response:	12 - 2500 Hz @ +1 / -3 dB			
AUX OUT level range:	0 to 3 Volts peak-to-peak			
Audio Speaker Output:	>700 mW into 8 Ω, with less than 5 % THD (0 to 2.5 Vrms)			
Audio Speaker freq response:	de-emphasized 6 dB/octave from 400 to 2500 Hz			
Current Drain:	Receive Standby: 25 mA at 12.5 VDC			

TRANSMITTER				
Voice Emission Designator:	*15K0F3E	10K0F3E	*15K0F3E	10K0F3E
RF Power Output:	2.0 Watts @ 12.5 VDC < .9 A 8.0 Watts @ 12.5 VDC < 1.8 A 10.0 Watts @ 14 VDC < 1.8 A		2.0 Watts @ 12.5 VDC < .9 A 5.0 Watts @ 12.5VDC < .9 A	
Transmitter Duty Cycle:	With supply below 13.5 volts: 8 W board only model - 100 % with added heat sink** maintained at 25° C 8 W encased model - 33 % with case end cap*** maintained at 25° C 5 W encased model - 50 % with case end cap*** maintained at 25° C (with heat sink or case end cap above 25° C, degrades linearly to 0% at 60° C)			
Data Emissions Designator for external modem:	9K8F1D			
Deviation:	+/- 5.00 kHz	+/- 2.50 kHz	+/- 5.00 kHz	+/- 2.50 kHz
Transmitter attack time:	< 10 ms			
FM Hum and Noise:	-45 dB	-40 dB	-45 dB	-40 dB
Audio Distortion:	< 5 %			
Spurious and Harmonics:	-25 dBm max		-20 dBm max	
Aux In frequency response:	8 Hz to 2500 Hz @ +1 / -3 dB			
Aux In level range:	0.1 to 5 V peak-to-peak			
Microphone freq response:	pre-emphasized 6 dB/octave from 300 to 2500 Hz			
Microphone level:	25 mV rms for nominal +/- 3 kHz deviation on wideband channel			
Current Drain:	2.0 Watts @ 12.5 VDC < .9 A 8.0 Watts @ 12.5 VDC < 1.8 A 10.0 Watts @ 14 VDC < 1.8 A		2.0 Watts @ 12.5 VDC < .9 A 5.0 Watts @ 12.5VDC < 1.2 A	

† pending model
** a heatsink can be added to the board only versions using the two holes next to the RF PA shield.
*** case end cap refers to aluminum extrusion end cap on opposite side from connectors.

***** Wideband (25KHz) model available by special order only and where allowed by appropriate regulatory authorities.

SINGLE BOARD TRANSCEIVER WITH HOUSING & MOUNTING FLANGES

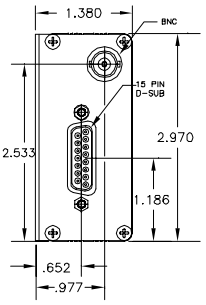

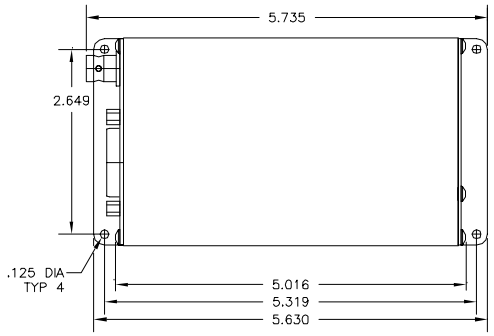

SINGLE BOARD TRANSCIEVER (Board Only)

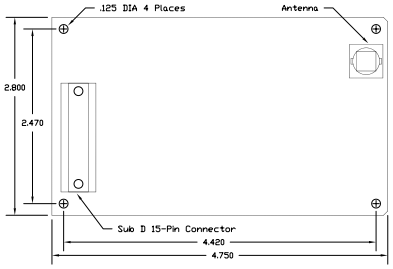

SUB D 15-PIN CONNECTOR

The DTX-445-145 is equipped with a 15-pin sub D connector with the following functions:

Pin #	Name	Description
1	CS0 Channel	Select low bit
2	CS1 Channel	Select mid bit
3	CS2Channel	Select high bit
4	MIC IN	Microphone Input
5	H/L PWR	High/Low Power
6	SUPPLY	Power Supply Input
7	AUX IN	Auxiliary Input
8	AUX OUT	Auxiliary Output
9	PGN IN/OUT	Programming I/O
10	N/A	Not Used
11	RX MON	Monitor
12	Audio Out	Audio PA Output
13	DCD	Carrier Detect
14	PTT	Push-to-Talk
15	GND	Ground

Go Beyond Normal Limits...℠

RITRON® WIRELESS SOLUTIONS

P.O.Box 1998, Carmel, IN 46032 • PH: 317.846.1201 • FX: 317.846.4978 • email: sales_info@ritron.com • www.ritron.com

©2013 Ritron, Inc. All rights reserved. Ritron, Jobcom, Patriot, OutPost, GateGuard, Radio Nexus, Quiet Call and QuickAssist are registered trademarks of Ritron, Inc. Quick Talk, Liberty, and LoudMouth are trademarks of Ritron, Inc.

5/2019