0603ESDA2-TR2

ESD suppressor



Surface Mount Device

Product features

- Lead free, halogen free materials
- 0603/1608 footprint surface mount device
- Ideal ESD protection for high frequency, low voltage applications
- Exceeds testing requirements of IEC 61000-4-2
- Ultra low capacitance (0.15pF maximum)
- Very low leakage current
- Fast response time
- Bi-directional
- Moisture sensitivity level (MSL): 1

Specifications				
Performance Characteristics	Units	Min	Typ	Max
Continuous Operating Voltage	Vdc	- -	14	30
Clamping Voltage	V	- -	35	60
Trigger Voltage	V	- -	350	- -
ESD Threat Voltage Capability	kv	- -	8	15
Capacitance (@ 1MHz)	pF	- -	0.10	0.15
Leakage Current (@ 12Vdc)	nA	- -	<0.1	100
Peak Current	A	- -	30 Typ.	45
Operating Temperature	℃	-55	+25	+105
ESD Pulse Withstand	# Pulses	20	>500	- -

1. Per IEC 61000-4-2, 30A @ 8kV, Level 4, contact discharge, measurement made 30ns after initiation of pulse.
2. Trigger measurement made using Transmission Line Pulse (TLP) method.

Applications

- Computers and peripherals
- Blu-Ray/DVD players
- Satellite and HD radio
- Set top Boxes
- High speed data ports
  - USB 2.0/3.0
  - High speed Ethernet
  - Infiniband®
  - IEEE 1394
  - DVI
  - HDMI
- PDAs
- Digital camcorders
- DSL Modems
- HDTV Equipment
- A/V Equipment
- Cell phones
- Digital still cameras
- MP3 / Multimedia players
- External storage
- GPS

Part Numbering System: 0603 ESDA 2 TR2

- 0603 — Package size
- ESDA — Product family
- 2 — Second generation designator
- TR2 — Packaging code

Packaging Code

Package Code Suffix	Description
-TR2	5000 pieces in paper tape on 7 inch diameter (178mm) reel per EIA Standard 481

Device marking

603ESDA2-TR2 ESD Suppressors are marked on the tape and reel packages, not individually. Since the product is bi-directional and symmetrical, no orientation marking is required.

Design considerations

The location in the circuit for the 0603ESDA2-TR2 family has to be carefully determined. For better performance, the device should be placed as close to the signal input as possible and ahead of any other component. Due to the high current associated with an ESD event, it is recommended to use a "0-stub" pad design (pad directly on the signal/data line and second pad directly on common ground).

Processing recommendations

The 0603ESDA2-TR2 family currently has a convex profile on the top surface of the part. This profile is a result of the construction of the device. They can be processed using standard pick-and-place equipment. The placement and processing techniques for these devices are similar to those used for chip resistors and chip capacitors.

Dimensions - mm (in)

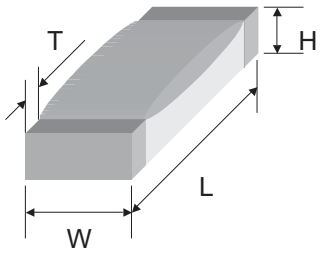

EIA Size	L	W	H	T
0603ESDA	1.60±0.15 (0.063±0.006)	0.80±0.10 (0.031±0.004)	0.60±0.10 (0.024±0.004)	0.31±0.21 (0.012±0.008)

Recommended Pad Layout - in (mm)

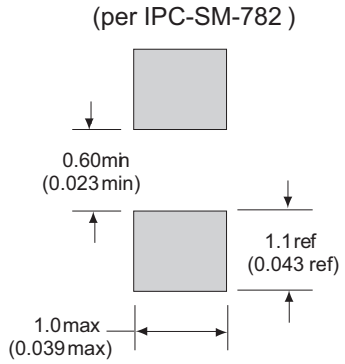

Packaging

- 5000 pieces in paper tape on 7 inch diameter (178mm) reel per EIA Standard 481.

Tape and Reel Specifications - mm (in)

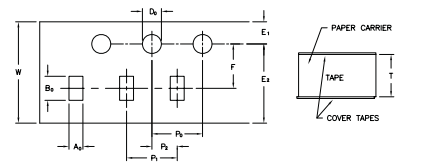

CARRIER DIMENSION (mm)										
A_0	B_0	D_0	E_1	E_2	F	P_0	P_1	P_2	T	W
±0.20	±0.20	±0.10	±0.10	±0.30	±0.05	±0.10	±0.10	±0.05	±0.05	±0.30
1.10	1.90	1.50	1.75	6.25	3.50	4.00	4.00	2.00	0.75	8.00

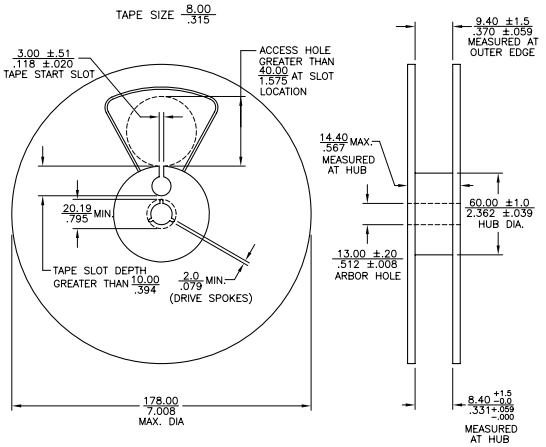

Environmental Specifications:

- Coating bond strength: ASTM D3359-83, Method A, Section 6. Note: the device coating is not scored.
- Chemical resistance: ASTM D-543, 4 hrs @ 40°C, 3 solutions (H_2O, detergent solution, defluxer).
- Humidity(steady state): MIL-STD-883, method 1004.7, 85% RH, 85°C, 240 hrs.
- Thermal shock: MIL-STD-202F, method 107G, -65°C to 125°C, 30 min, 5 cycles.
- Vibration: MIL-STD-202F,method 201A,(10 to 55 to 10Hz, 1 minute cycle, 2 hrs. each in X-Y-Z axis).
- Solder leach resistance and terminal adhesion per EIA-567.
- Solderability per MIL-STD-202, Method 208 (95% coverage).
- Full load voltage: 14.4Vdc, 1000hrs., 25°C.
- Operating temperature characteristics: Electrical testing at +105°C and -55°C.

Soldering Recommendations

- Compatible with lead and lead-free solder reflow processes
- Peak temperatures and durations:
  - IR Reflow = 260°C max for 30 sec. max. Capable of 3X reflow.
  - Wave Solder = 260°C max. for 10 sec. max.
  - Hand Soldering = 350°C max. for 5 sec. max.

Recommended IR Reflow Profile

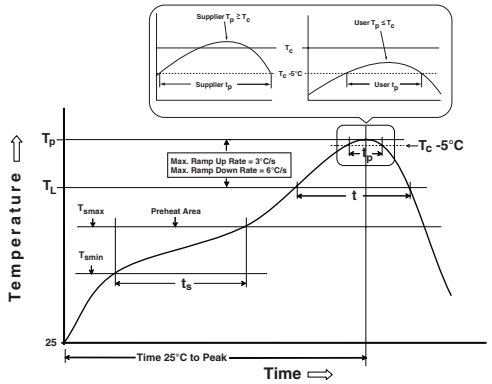

Profile Feature	Sn-Pb Eutectic Assembly	Pb-Free Assembly
Preheat & Soak		
Temperature min (T_{smin})	100°C	150°C
Temperature max (T_{smax})	150°C	200°C
Time (T_{smin} to T_{smax}) (t_s)	60-120 seconds	60-120 seconds
Average ramp-up rate (T_{smax} to T_p)	3°C/second max.	3°C/second max.
Liquidous temperature (T_L)	183°C	217°C
Time at liquidous (t_L)	60-150 seconds	60-150 seconds
Peak package body temperature (T_p)*	See classification temp in Table 4.1	See classification temp in Table 4.2
Time (t_p)** within 5°C of the specified classification temperature (T_c)	20** seconds	30** seconds
Average ramp-down rate (T_p to T_{smax})	6°C/second max.	6°C/second max.
Time 25°C to peak temperature	6 minutes max.	8 minutes max.

* Tolerance for peak profile temperature (T_p) is defined as a supplier minimum and a user maximum.
** Tolerance for time at peak profile temperature (t_p) is defined as a supplier minimum and a user maximum.

Life Support Policy: Eaton does not authorize the use of any of its products for use in life support devices or systems without the express written approval of an officer of the Company. Life support systems are devices which support or sustain life, and whose failure to perform, when properly used in accordance with instructions for use provided in the labeling, can be reasonably expected to result in significant injury to the user.

Eaton reserves the right, without notice, to change design or construction of any products and to discontinue or limit distribution of any products. Eaton also reserves the right to change or update, without notice, any technical information contained in this bulletin.

Eaton
Electronics Division
1000 Eaton Boulevard
Cleveland, OH 44122
United States
www.eaton.com/electronics

© 2025 Eaton
All Rights Reserved Printed in USA
Publication No. 4419 BU-SB12433
Published December 2025

Eaton is a registered trademark.

All other trademarks are property of their respective owners.

Follow us on social media to get the latest product and support information.

Powering Business Worldwide