41206ESDA(2)-TR

ESD suppressor four-channel



Product features

- Protects up to 4 separate lines with one device
- ESD protection for high frequency, low voltage applications
- Exceeds testing requirements outlined in IEC 61000-4-2
- Extremely low capacitance
- 1206 (3216 metric) compact design utilizes less board space
- Fast response time
- Bi-directional
- 41206ESDA-TR1 Ceramic substrate, 41206ESDA2-TR2 Alumina substrate

Applications

- computers and computer-related equip-ment, such as modems, keyboards, and printers. ESDA family is also well suited for portable electronic equipment such as mobile tele-phones, test equipment, and card scanners nfotainment and telematics
  - Computers
  - Printers
  - Portable electronics
  - Mobile phones
  - Test equipment
  - Card scanners

Environmental compliance

RoHS

HALOGEN HF FREE

41206ESDA-TR1 not Halogen free

Ordering part number

4 1206 ESD A -TR1

- 4 channel device
- Size designator
- Type
- Characteristics
- Packaging suffix

Characteristic

A= Standard

A2= 2nd Generation

Package suffix

-TR1 and -TR2: 5000 parts on a 7” diameter reel

Powering Business Worldwide

Product specifications

Performance Characteristics	Units	Min	Typ	Max
Continuous operating voltage[1]	Vdc		12	
Clamping voltage[3]	V		35	60
Trigger voltage[4]	V		500	
ESD Threat voltage capability[5]	kV		8	15
Capacitance (@ 1 kHz to 1.8 GHz)	pF		0.15	1
Leakage current (@ 12 Vdc)	nA			100
Peak current[3]	A		30	45
Operating temperature	°C	-40	+25	+105
ESD pulse withstand[3,2]	# pulses	20	>500	-

1. The product is 100% tested for 30 V operating voltage at +25°C. Continuous operation with higher than 12 Vdc under extreme temperature and humidity may cause increasing leakage current and/or shifting device resistance. However, even under severe environmental test, characteristics of the device did not change up to 12 Vdc operation.
2. Some shifting in characteristics may occur when tested over several hundred ESD pulses at very rapid rate of 1 pulse per second or faster.
3, Per IEC 61000-4-2, 30 A @ 8 kV, level 4, clamp measurement made 30 ns after initiation of pulse, all tests in contact discharge mode.
4, Trigger measurement made using Transmission line pulse (TLP) method.
5. PolySurg™ devices are capable of withstanding up to a 15 kV, 45 A ESD pulse. Device ratings are given at 8 kV per Note 1, unless otherwise specified.

Circuit symbol

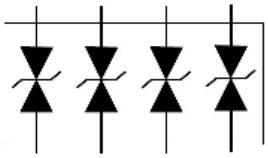

Dimensions—mm/(inch)

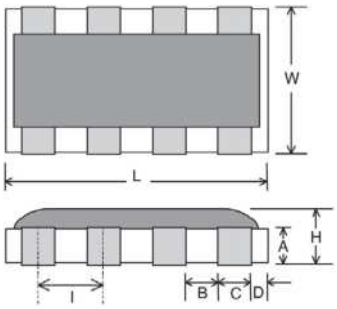

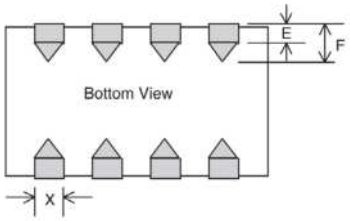

Recommended pad layout (per IPC-7351)

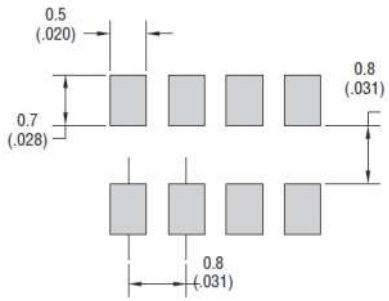

L	W	H	A	B	C	D	E	F	I	X
3.2 ± 0.2 (0.126 ± 0.008)	1.6 ± 0.2 (0.063 ± 0.008)	0.8 max (0.032 max)	0.38 ± 0.05 (0.015 ± 0.002)	0.2 min, 0.4 typ (0.008 min, 0.16 typ)	0.4 Typ (0.016 Typ)	0.2 ± 0.1 (0.008 ± 0.004)	0.2 Typ (0.008 typ)	0.38 ± 0.20 (0.015 ± 0.008)	0.80 ± 0.02 (0.03 ± 0.0008)	0.45 ± 0.02 (0.017 ± 0.0008)

Part marking : No marking

Termination finish: Tin over nickel

Color: Green: 41206ESDA-TR1; Black: 41206ESDA2-TR2

General specifications

Moisture resistance: MIL-STD-202 Method 103, +85 °C, 85%R.H., 240 hours
Thermal shock: MIL-STD-202, Method 107G, -65 °C to +125 °C, 30 minutes per cycle, 5 cycles
Vibration: MIL-STD-202F, Method 201A,(10 to 55 to 10 Hz, 1 minute per cycle, 2 hours each in X-Y-Z)
Chemical resistance: ASTM D-543, 24 hours @ +50 °C, 3 solutions (H2O, detergent solution, de_fluxer)
Full load voltage: Up to 24 Vdc, 1000 hours, +25°C
Resistance to solder heat: Per MIL-STD-202 Method 210
Solderability: MIL-STD-202, Method 208 (95% coverage)

Packaging information - mm

5,000 parts on a 7 inch tape and reel (EIA Standard 481 compliant)

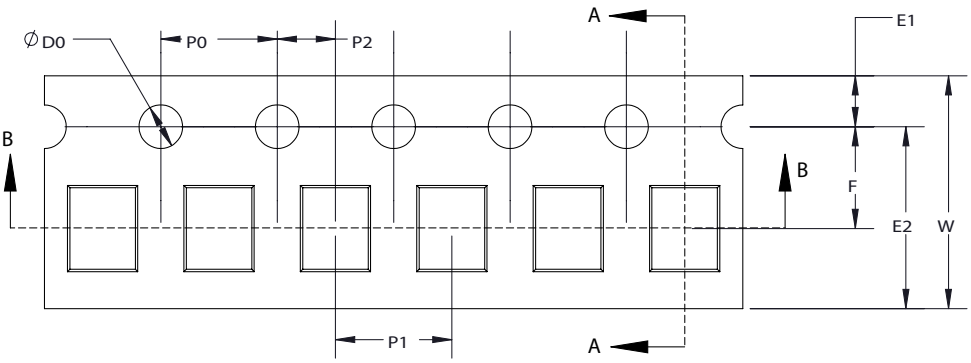

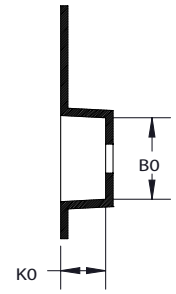

SECTION A-A

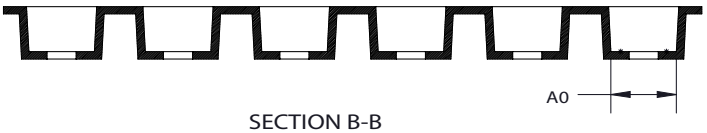

SECTION B-B

Dimension	Millimeter
W	8.00±0.30
F	3.50±0.05
E1	1.75±0.10
E2	6.25±0.30
P0	4.00±0.10
P1	4.00±0.10
P2	2.00±0.05
D0	1.5±0.10
A0	3.62±0.02
B0	2.02±0.02
K0	0.75±0.05

Design considerations

The location in the circuit for the 41206ESDA(2) has to be carefully determined. For better performance, the device should be placed as close to the signal input as possible and ahead of any other component. Due to the high current associated with an ESD event, it is recommended to use a "0-stub" pad design (pad directly on the signal/data line and second pad directly on common ground).

Device application

41206ESDA(2) family are applicable to most signal line circuits. It is applied in a shunt-connected manner. They are not suitable for use on lines where lighting or load-switching transients are present. 41206ESDA(2) family is ideal for use in computers and computer related equipment, such as modems, keyboards, and printers. 41206ESDA(2) family is also well suited for portable electronic equipment such as mobile telephones, test equipment, and card scanners.

Processing recommendations

41206ESDA(2) family currently have a convex profile on the top surface of the part. This profile is a result of the construction of the device. They can be processed using standard pick-and-place equipment. The placement and processing techniques for 41206ESDA(2) family are similar to those used for chip resistors and chip capacitors

Typical applications

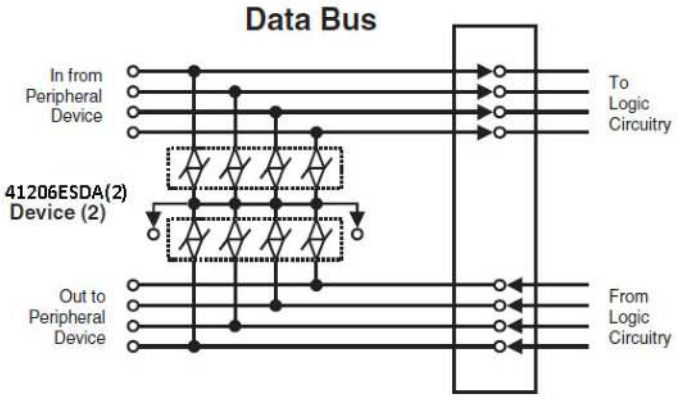

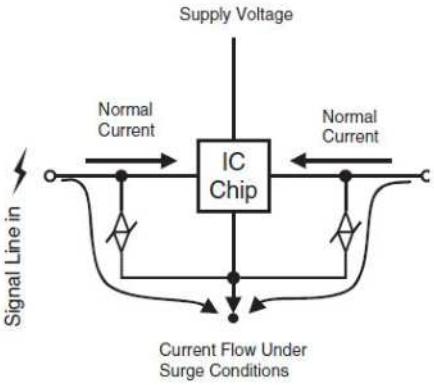

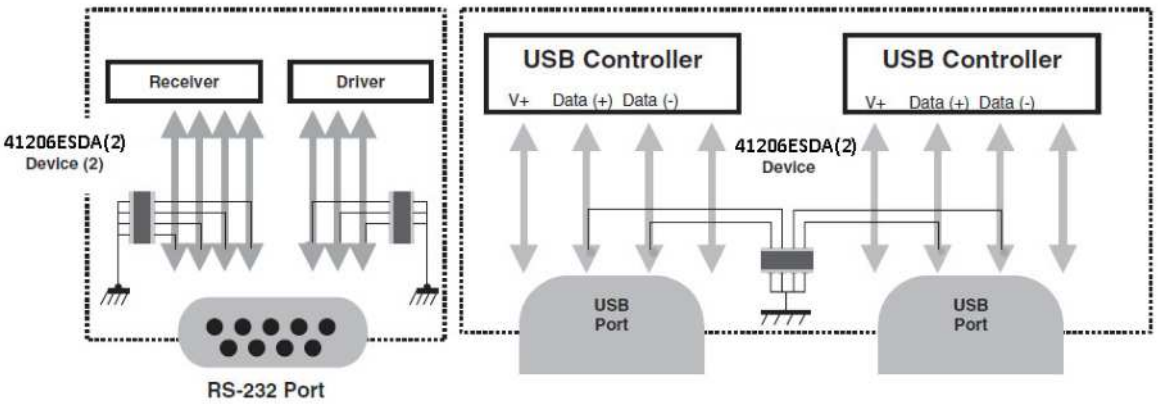

Solder reflow profile

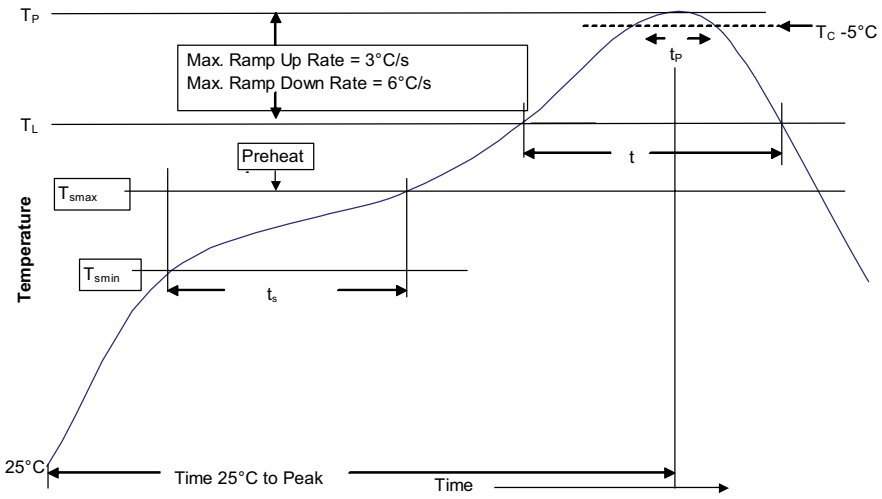

Table 1 - Standard SnPb solder (T_C)

Package thickness	Volume mm3 <350	Volume mm3 ≥350
<2.5 mm)	235 °C	220 °C
≥2.5 mm	220 °C	220 °C

Table 2 - Lead (Pb) free solder (T_C)

Package thickness	Volume mm³ <350	Volume mm³ 350 - 2000	Volume mm³ >2000
<1.6 mm	260 °C	260 °C	260 °C
1.6 – 2.5 mm	260 °C	250 °C	245 °C
>2.5 mm	250 °C	245 °C	245 °C

Reference J-STD-020

Profile feature		Standard SnPb solder	Lead (Pb) free solder
Preheat and soak	• Temperature min. (T_{smin})	100 °C	150 °C
	• Temperature max. (T_{smax})	150 °C	200 °C
	• Time (T_{smin} to T_{smax}) (t_S)	60-120 seconds	60-120 seconds
Ramp up rate T_L to T_p		3 °C/ second max.	3 °C/ second max.
Liquidous temperature (T_L) Time (t_L) maintained above T_L		183 °C 60-150 seconds	217 °C 60-150 seconds
Peak package body temperature (T_P)*		Table 1	Table 2
Time (t_p)* within 5 °C of the specified classification temperature (T_C)		20 seconds*	30 seconds*
Ramp-down rate (T_p to T_L)		6 °C/ second max.	6 °C/ second max.
Time 25 °C to peak temperature		6 minutes max.	8 minutes max.

* Tolerance for peak profile temperature (T_p) is defined as a supplier minimum and a user maximum.

Life Support Policy: Eaton does not authorize the use of any of its products for use in life support devices or systems without the express written approval of an officer of the Company. Life support systems are devices which support or sustain life, and whose failure to perform, when properly used in accordance with instructions for use provided in the labeling, can be reasonably expected to result in significant injury to the user.

Eaton reserves the right, without notice, to change design or construction of any products and to discontinue or limit distribution of any products. Eaton also reserves the right to change or update, without notice, any technical information contained in this bulletin.

Eaton
Electronics Division
1000 Eaton Boulevard
Cleveland, OH 44122
United States
Eaton.com/electronics

© 2023 Eaton
All Rights Reserved
Printed in USA
Publication No. DS41206
January 2023

Eaton is a registered trademark.

All other trademarks are property of their respective owners.

Follow us on social media to get the latest product and support information.