TECHSIL CONDUCTIVE ELASTOMERS

LEADER TECH
a HEICO company

The Leading Edge in EMI Shielding Technology

Introduction

EMI Shielding Gaskets for Electronic Enclosures

Shielding gaskets are, very simply, connectors of two opposing metallic planes which make them appear as one continuous surface, by connecting across the opening. Depending on the frequencies involved, the openings must be reduced as closely as possible to a continuous seal. Leader Tech's TechSIL Conductive Elastomers are made from several different polymers and are mixed with six different types of fillers. These blended materials will allow you to use the same gasket as an environmental seal and for superior EMI shielding. Leader Tech's TechSIL products have superior shielding properties and ensure a long performance life. We offer several different manufacturing methods that will also insure that the most cost effective method is utilized to produce your gaskets.

Benefits of Conductive Elastomer Shielding Gaskets

- Excellent Shielding Effectiveness
- Excellent as an EMI shield and environmental gasket which allows for better use of space
- Many different profiles and shapes available to meet your specific requirements
- Low Compression forces achievable with hollow gaskets
- Low cost materials and profiles available
- Available with many different mounting methods
- Leader Tech approved on all 12 MIL-DTL-83528 materials *(over 2,000 part numbers available)*
- Made in U.S.A. which allows for short lead-times ,prototyping, and ITAR compliance
- Many different materials available to insure galvanic compatibility
- Military and Commercial materials available to meet your specific needs

Table of Contents

Material Selection Guide 4-5

Galvanic Compatibility Chart 6-7

Design Recommendations

Shape 8-11

Sheet Material 12

Extrusions

Rectangle 13

Round 14

Hollow Round 15

Solid D 16

Hollow D 17

Hollow P 18

U Channel 19

Molded

O-Rings 20-22

O-Rings D Cross Section 23

Rectangle D Cross Section 24

Rectangle O Cross Section 25

Waveguide A 26

Waveguide B 27

Die Cut

Flange Mount 28

Flat Circular Washer 29

Specials 30

Custom 31

Form-In-Place 32-33

Our Commitment 34

Additional Leader Tech Products 35

LEADER TECH SATISFYING OUR CUSTOMERS BY SCORE OPTIMIZING OUR RESOURCES EVERYDAY QUALITY POLICY

ISO 9001: 2008 CERTIFIED

RoHS COMPLIANT

Material Selection Guide

MATERIAL SPECIFICATIONS

LTE Material Number		LTE-10	LTE-15	LTE-45	LTE-20	LTE-65	LTE-50	LTE-25	LTE-55	LTE-76
Elastomer Type		SIL	SIL	SIL	SIL	SIL	SIL	SIL	SIL	SIL
Filler Material		Ag/Cu	Ag/Cu	Ag/Cu	Ag/Al	Ag/Ni	Ag/G	Ag	Ag	Ag
MIL-DTL-83528 Material Type:		A	G	K	B	L	M	H	E	-
Electrical Properties	**Test Method**									
Volume Resistivity (Ohm-cm) (Max)	MIL-DTL-83528	.004	.007	.005	.008	.005	.006	.005	.002	.010
Shielding Effectiveness 20 MHz-10GHz – (dB Min)	MIL-DTL-83528	110	110	110	100	100	100	110	110	52
Physical Properties										
Specific Gravity (+-13%)	ASTM D792	3.5	4.75±.75	3.5	2.0	4.0	1.9	4.0	3.5	1.7
Hardness - Shore A (+-7)	ASTM D2240	65	80	85	65	75	65	80	65	45
Tensile Strength – PSI (Min)	ASTM D412	200	600	400	200	200	200	400	300	150
Elongation % (Min/Max)	ASTM D412	100/300	20-N/A	100/300	100/300	100/300	100/300	90/290	200/500	50/250
Tear Strength – PPI (Min)	ASTM D624 (DIE C)	25	70	40	30	30	30	60	50	20
Compression Set % (Max)	ASTM D395	32	N/A	35	32	32	30	60	45	35
Upper Operating Temp (°C)	-	125	125	125	160	125	160	160	160	160
Lower Operating Temp (°C)	ASTM D1329	-55	-45	-45	-55	-55	-55	-55	-55	-55
Electrical Stability										
After Heat Aging, Ω cm, max		.010	.010	.010	.010	.010	.015	.008	.010	.015
After Break, Ω cm, max		.008	N/A	.010	.015	.010	.009	.006	.010	.020
During vibration, Ω cm, max		.006	.010	.010	.012	.010	.009	.006	.010	.132
After vibration, Ω cm, max		.004	.007	.005	.008	.005	.006	.005	.002	.031
After Exposure to EMP, Ω cm, max		.010	.010	.010	.010	.010	.015	.008	.010	.184
Compression / Deflection, %, min		3.5	2.5	2.5	3.5	3.5	3.5	2.5	2.5	8.0
Fluid Immersion - Survive or Non-Survive (N/S)		N/S	N/S	N/S	N/S	N/S	N/S	N/S	N/S	N/S

ELASTOMER TYPE

Silicone = SIL	Fluorosilicone = F.SIL	Ethylene Propylene Diene Monomer = EPDM

Silver = Ag	Silver Plated Copper =

MATERIAL SPECIFICATIONS

LTE Material Number		LTE-60	LTE-60-40D	LTE-30	LTE-40	LTE-40-45D	LTE-35	LTE-90	LTE-70	LTE-85
Elastomer Type		SIL	SIL	F.SIL	F.SIL	F.SIL	F.SIL	F.SIL	EPDM	EPDM
Filler Material		Ni/C	Ni/C	Ag/Cu	Ag/Al	Ag/Al	Ag	Ni/C	Ag/Al	Ni/C
MIL-DTL-83528 Material Type:		-	-	C	D	-	F	-	-	-
Electrical Properties	**Test Method**									
Volume Resistivity (Ohm-cm) (Max)	MIL-DTL-83528	.100	.100	.010	.012	.015	.002	.100	.010	.100
Shielding Effectiveness 20 MHz-10GHz – (dB Min)	MIL-DTL-83528	100	100	110	90	90	110	100	90	75
Physical Properties										
Specific Gravity (+-13%)	ASTM D792	1.9	1.9	4.0	2.0	1.9	4.0	2.2	2.2	2.2
Hardness - Shore A (+-7)	ASTM D2240	55*	40	75	70	45	75	70	80	80
Tensile Strength – PSI (Min)	ASTM D412	150	125	180	180	100	250	150	200	200
Elongation % (Min/Max)	ASTM D412	100/300	100/300	100/300	60/260	60/260	100/300	60/250	70/260	70/260
Tear Strength – PPI (Min)	ASTM D624 (DIE C)	30	20	35	35	20	40	40	60	60
Compression Set % (Max)	ASTM D395	25	40	35	30	35	60	25	50	40
Upper Operating Temp (°C)	-	160	160	125	160	160	160	160	160	125
Lower Operating Temp (°C)	ASTM D1329	-55	-55	-55	-55	-55	-65	-55	-40	-40
Electrical Stability										
After Heat Aging, Ω cm, max		.200	.150	.015	.015	.015	.010	.200	.200	.250
After Break, Ω cm, max		.100	.250	.015	.015	.025	.010	.100	.200	.250
During vibration, Ω cm, max		.100	.150	.015	.015	.015	.010	.100	.015	.150
After vibration, Ω cm, max		.100	.100	.010	.012	.012	.002	.100	.010	.100
After Exposure to EMP, Ω cm, max		.100	.150	.015	.015	.015	.010	.100	.015	.100
Compression / Deflection, %, min		8.0	3.0	3.5	3.5	3.5	3.5	5.0	3.0	3.0
Fluid Immersion - Survive or Non-Survive (N/S)		N/S	N/S	Survive	Survive	Survive	Survive	Survive	N/S	N/S

*Extruded materials will be Shore A 70 (+/-7)

FILLER MATERIAL

Ag/Cu	Silver Plated Aluminum = Ag/Al	Silver Plated Nickel = Ag/Ni	Silver Plated Glass = Ag/G	Nickel Coated Graphite = Ni/C

Galvanic Compatibility Chart

Galvanic Compatibility - *A Guide to Selecting Conductive Elastomers*

Galvanic compatibility is a significant consideration when specifying a conductive elastomer as an EMI shielding or environmental seal gasket. A properly selected gasket will provide excellent shielding effectiveness and environmental protection while exhibiting minimal galvanic corrosion.

Galvanic corrosion is an electrochemical reaction that occurs when two dissimilar materials are in direct contact in a favorable environment (temperature, humidity, salinity, water). The galvanic series offers a general guideline for selecting compatible metallic couples. However, electrically conductive elastomers are composite materials that react differently than metals due to many factors including the composition of the conductive fillers, the permeability of the elastomer, and the presence of unique corrosion inhibitors.

How to Use the Chart

The chart below provides a guide for selecting the least corrosive galvanic couple between your metal chassis and the conductive elastomer. Simply find your chassis material in the first column and follow the line to the right to determine what conductive elastomer is best for your application.

	TechSIL Material/Elastomer Type / Filler Material / MIL-DTL-83528					
Chassis Material	LTE-10 Silicone Ag/Cu A	LTE-20 Silicone Ag/Al B	LTE-30 Fluorosilicone Ag/Cu C	LTE-40 Fluorosilicone Ag/Al D	LTE-50 Silicone Ag/G M	LTE-60 Silicone Ni/C ---
Chromated Al						
Tin Plated Steel						
Zinc Plated Steel						
Stainless Steel						

Silver = Ag, Copper = CU, Aluminum = Al, Nickel = Ni, Glass = G, Nickel Coated Graphite = Ni/C

Excessive Corrosion Moderate to Excessive Corrosion Moderate Corrosion Minimal Corrosion

Other TechSIL Formulations

Additional material formulations as well as unique profiles, molded shapes and die-cuts are also available. Please contact our engineering department or visit www.leadertechinc.com for a complete listing.

Phone: 866.832.4364 Fax: 813.855.3291 Web: www.leadertechinc.com

Inspection Criteria for All Conductive Elastomer Products

Leader Tech Inc. manufactures eleven material types of MIL-DTL-83528E that have been submitted to and approved by the Defense Logistics Agency. The materials were tested to MIL-DTL-83528E 4.2 Qualification Inspection requirements as follow:

- Visual Inspection
- Dimensioning
- Specific Gravity
- Hardness
- Compression/Deflection
- Tensile Strength and Elongation
- Compression Set
- Tear Strength
- Volume Resistivity
- Shielding Effectiveness
- Electrical Stability During Vibration
- Electrical Stability After Break
- Low temperature Flex
- Life Testing
- EMP Survivability
- Fluid Immersion

All material batches are tested to the In-Process Inspection Requirements of MIL-DTL-83528E 4.3 or applicable commercial specifications for commercial grade products. The following attributes are tested for each and every batch:

- Specific Gravity
- Volume Resistivity
- Hardness
- Tensile Strength and Elongation
- Tear Strength
- Electrical Stability After Break

Design Recommendations for Conductive Elastomers

Things to Consider When Selecting an EMI or Environmental Gasket

- Operating Environment
- Operating Frequency
- Materials Compatibility
- Mounting Method
- Space and Weight Issues

Types of TechSIL Conductive Elastomers

- Flat Gaskets, Sheets or Die Cut Parts
- Molded Shapes, O-Rings or Special Shapes or Patterns
- Extruded Profiles
- Form-In-Place Gaskets

Operating, Storage and Assembly Environment Considerations

When selecting a Leader Tech TechSIL Conductive Elastomer the following Environmental issues must be considered when selecting a gasket for your application (see Table 1).

- Temperature
- Shelf Life
- Chemical Compatibility
- Galvanic Compatibility

TABLE I

Leader Tech Material Number	MIL-DTL-83528 Material Code	Description
LTE-10	A	Silver-plated, copper-filled silicone capable of 110 dB of plane wave shielding effectiveness at 10 GHz with a continuous use temperature range of range of -55°C to +125°C.
LTE-15	G	Silver-plated, copper-filled silicone, expanded copper foil reinforced, capable of 110 dB of plane wave shielding effectiveness at 10 GHz with a continuous use temperature range of -45°C to +125°C.
LTE-20	B	Silver-plated, aluminum-filled silicone capable of 100 dB of plane wave shielding effectiveness at 10 GHz with a continuous use temperature range of -55°C to +160°C.
LTE-25	H	A high durometer, pure silver-filled silicone capable of 110 dB of plane wave shielding effectiveness at 10 GHz with a continuous use temperature range of -55°C to +160°C.
LTE-30	C	Silver-plated, copper-filled fluorosilicone capable of 110 dB of plane wave shielding effectiveness at 10 GHz with a continuous use temperature range of -55°C to +125°C and resistant to solvents and jet fuels.
LTE-35	F	Pure silver-filled fluorosilicone capable of 110 dB of plane wave shielding effectiveness at 10 GHz with a continuous use temperature range of -65°C to +160°C and resistant to solvents and jet fuels.
LTE-40	D	Silver-plated, aluminum-filled fluorosilicone capable of 90 dB of plane wave shielding effectiveness at 10 GHz, with, a continuous use temperature range of -55°C to +160°C, and resistant to solvents and jet fuels.
LTE-45	K	A high durometer silver-plated, copper-filled silicone capable of 110 dB of plane wave shielding effectiveness at 10 GHz with a continuous temperature range of -45°C to +125°C.
LTE-50	M	Silver plated glass-filled silicone capable of 100 dB of plane wave shielding effectiveness at 10 GHz with a continuous temperature range of -55°C to +160°C.
LTE-55	E	A medium durometer, pure silver-filled silicone capable of 110 dB of plane wave shielding effectiveness at 10 GHz with a continuous use temperature range of -55°C to +160°C.
LTE-60	N/A	Nickel Graphite-filled silicone capable of 100 dB of plane wave shielding effectiveness at 10 GHz with a continuous use temperature range of -55°C to +160°C.
LTE-65	L	Silver-plated, nickel-filled silicone capable of 100 dB of plane wave shielding effectiveness at 10 GHz with a continuous use temperature range of -55°C to +125°C.
LTE-70	N/A	Silver-plated, aluminum-filled EPDM capable of 90 dB of plane wave shielding effectiveness at 10 GHz with a continuous use temperature range of -40°C to +160°C. Resistant to NBC washdown materials
LTE-76	N/A	A low durometer, pure silver-filled silicone, capable of 52 dB of plane wave shielding effectiveness at 10 GHz with a continuous use temperature range of -55°C to +160°C.
LTE-85	N/A	Nickel Graphite-filled EPDM capable of 75 dB of plane wave shielding effectiveness at 10 GHz with a continuous use temperature range of -40°C to +125°C. Resistant to NBC wash-down materials
LTE-90	N/A	Nickel Graphite-filled fluorosilicone capable of 100 dB of plane wave shielding effectiveness at 10 GHz with a continuous use temperature range of -55°C to +160°C and resistant to solvents and jet fuels.

Phone: 866.832.4364 Fax: 813.855.3291 Web: www.leadertechinc.com

Polymers

TechSIL Conductive Elastomers are used in most cases to achieve the correct shielding effectiveness as well as to protect the device from the environment by also offering an environmental seal. TechSIL Conductive Elastomers are made from several different types of polymers and are blended with several different types of conductive fillers. When selecting the correct TechSIL Conductive Elastomer for your application there are several things that must be considered prior to selecting the appropriate shape or type of gasket. The different polymers that are currently offered by Leader Tech Inc. are Silicone, Fluorosilicone and EPDM (Ethylene Propylene Diene Monomer). Each one will work very well in specific environments but some will work better than others in a wide range of environments. The types of chemicals that the gasket will be exposed to will determine the type of polymer that should be used (see table #2).

TABLE 2

CHEMICAL COMPATIBILITY OF BASE POLYMER			
Fluid	Silicone	Fluorosilicone	EPDM
ASTM 1 Oil	Fair	Good	Not Recommended
Compression Set	Good	Good	Good
Concentrated Acids	Not Recommended	Not Recommended	Fair
Concentrated Bases	Not Recommended	Not Recommended	Good
Dilute Acids	Fair	Good	Good
Dilute Bases	Fair	Good	Preferred
DS-2 Decontamination Fluid	Poor	Poor	Good
Esters/Ketones	Not Recommended	Not Recommended	Preferred
High Temperature	Preferred	Good	Good
Low Temperature	Preferred	Preferred	Preferred
Hydraulic Fluids (Organic)	Fair	Good	Not Recommended
Hydraulic Fluids (Phosphoric Acid Ester)	Fair	Fair	Preferred
Hydrocarbon Fuels	Not Recommended	Good	Not Recommended
Impermeability to Gases	Poor	Fair	Good
Ozone and Ultraviolet	Preferred	Preferred	Preferred
Resistance to Radiation	Good	Poor	Good
STB Decontamination Fluid	Good	Good	Good

Not Recommended Poor Fair Good Preferred

Leader Tech's standard TechSIL Conductive Elastomer gaskets are made using three polymers. These polymers will have the following shelf life once they are blended with the appropriate filler (see Table 3).

BASE POLYMER	SHELF LIFE (YEARS)
EPDM (Ethylene Propylene Diene Monomer)	5 to 10 Years
Fluorosilicone	Up to 20 Years
Silicone	Up to 20 Years

TABLE 3

Fillers

Leader Tech Inc. is currently offering six different fillers that can be mixed with the polymers. These fillers are Pure Silver, Silver Plated Copper, Silver Plated Aluminum, Silver Plated Nickel, Silver Plated Glass, and Nickel Graphite particles. When these particles are combined with the polymers they make an excellent gasket that will offer EMI shielding and protect your device against the environment. In order to select the correct filler you must first determine what finish will be on your device. Galvanically some materials will perform much better when mounted against certain types of materials. An example of a material that will work well in almost all situations is Leader Tech's TechSIL LTE-40 material. This is a Fluorosilicone polymer material that is mixed with Silver Plated Aluminum particles. LTE-40 (MIL-DTL-83528 Type D) has excellent conductivity, excellent galvanic compatibility and it works well when exposed to most chemicals and harsh environments. On the other hand, if a device is being used exclusively in an office type environment the lower cost TechSIL LTE-60 material could be used (see Tables #1 and #4).

Most Popular TechSIL Formulations		Elastomer/Filler				
Leader Tech Material Code	LTE-10	LTE-20	LTE-30	LTE-40	LTE-50	LTE-60
MIL-DTL-83528	A	B	C	D	M	---
Chassis Material	Sil Ag/Cu	Sil Ag/Al	F.Sil Ag/Cu	F -Sil Ag/Al	Sil Ag/G	Sil Ni/C
Chromated Al						
Tin Plated Steel						
Zinc Plated Steel						
Stainless Steel						

TABLE 4

Excessive Corrosion Moderate to Excessive Moderate Corrosion Minimal Corrosion

Profiles

Once the material is selected it is time to decide what shape or profile will work best for your application. When using TechSIL Conductive Elastomers the amount of compression or deflection must always be considered. If a gasket is over compressed it will fracture and will no longer offer adequate shielding or environmental protection. There are four basic standard shapes for TechSIL Conductive Elastomers. The shapes are Flat, Round, "D" and "P". The Flat gasket is the only gasket that is not offered in a hollow configuration. The Round, "D" and "P" are all offered in solid and hollow configurations. Due to the make-up of these TechSIL Conductive Elastomers whenever possible it is recommended that a hollow shape be used. This will lower the compression forces required and also will allow for a wider operating range of the gasket (see table #5). The other advantage of the hollow gasket is that less material is used and in most cases the hollow gaskets are less expensive per foot than the solid gaskets.

Recommended Deflection/Compression	
Shape	Deflection/Compression
Flat Strip	5-10 Percent
Solid O	20-25 Percent
Solid D	15-20 Percent
Hollow O	20-50 Percent
Hollow D	25-50 Percent
Hollow P	25-50 Percent
Interference Fit	15-25 Percent

TABLE 5

Mounting Methods

TechSIL Conductive Elastomers can be mounted using grooves, Pressure Sensitive Adhesives, or mechanically fastening the gasket to the device. Sheets, Flat, "D" and "P" shape can have either Conductive PSA or non-Conductive PSA applied to help hold the gasket in place prior to assembly. When using non-conductive adhesives typically only 50% of the gaskets mounting surface has PSA applied to it. Round gaskets on the other hand can not have PSA applied and are mounted by using grooves that can retain the gasket and prevent excessive compression.

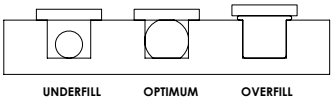

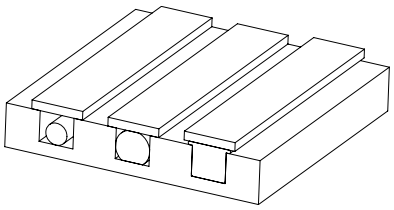

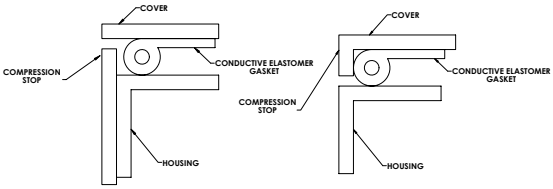

COMPRESSION STOP OPTIONS

Space and Weight Considerations

When using Leader Tech's TechSIL Conductive Elastomers there is a definite advantage over using other materials if there is limited space or if weight is a concern. TechSIL gaskets can be made in very small profiles and will still give significant EMI Shielding and Environmental protection while taking up very little space. The smaller profiles also weigh much less that other types of EMI gaskets.

Cost

Leader Tech's TechSIL Conductive Elastomers come in many different blends. When choosing a compound you should always choose the appropriate compound based on the environment where it will be used. If a harsh environment is expected then the appropriate materials should be selected (see Galvanic Compatibility chart). If however the device is used in a controlled environment the lower cost Nickel Graphite materials may be an option. One of our best materials for harsh environments is the LTE-40 Fluorosilicone Silver Plated Aluminum material (MIL-DTL-83528 Type D). If needed the cost of this material is more than beneficial to insure that there are no failures when your device is used in the field. If however your device is used and stored in a controlled environment using the LTE-60 Silicone Nickel Graphite will reduce the cost of the gasket by almost 50% and will supply the same amount of EMI shielding as the LTE-40 material.

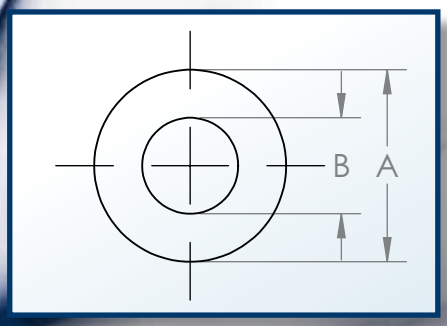

Leader Tech's TechSIL Conductive Elastomers contain over 65% of the conductive fillers needed to make them function as EMI shielding gaskets. In order to keep the cost of TechSIL gaskets as inexpensive as possible it is recommended that the smallest profile possible be used in your application. The controlling factor in the cost of the different compounds is the amount of conductive particles that have to be added. If a .125" hollow round gasket is used (5411-0001-xx, M83528/011X001) instead of a .250" hollow round gasket (5411-0003-xx, M83528/011X003) the amount of conductive material is reduced by almost 70%. This greatly affects the cost of the gasket. When using conductive elastomer gaskets using a smaller gasket can greatly help in reducing the cost of that gasket.

Sheet Material

Sheet Material

Our Most Popular!

Also Available with Conductive Adhesive*

Thickness	10 x 10	10 x 15	12 x 12	10 x 20	20 x 20
.020	5020-1010-XX	5020-1015-XX	5020-1212-XX	5020-1020-XX	5020-2020-XX
.032	5032-1010-XX	5032-1015-XX	5032-1212-XX	5032-1020-XX	5032-2020-XX
.062	5062-1010-XX	5062-1015-XX	5062-1212-XX	5062-1020-XX	5062-2020-XX
.093	5093-1010-XX	5093-1015-XX	5093-1212-XX	5093-1020-XX	5093-2020-XX
.100	5100-1010-XX	5100-1015-XX	5100-1212-XX	5100-1020-XX	5100-2020-XX
.125	5125-1010-XX	5125-1015-XX	5125-1212-XX	5125-1020-XX	5125-2020-XX

Leader Tech's TechSIL Sheet products can be used to die-cut connector gaskets or for custom shapes. They come in many sizes and thicknesses. The most common sizes are 10" x 10", 10" x 15", 12 x 12", 10" x 20", and 20" x 20" and in multiple thicknesses from .020" to .125". Additional sizes and thicknesses are available upon request. Sheets can be made to special sizes to eliminate any waste that could occur during water-jet or die cutting. TechSIL sheets can be molded out of all sixteen compounds and special compounds are available upon request.

THICKNESS TOLERANCE
.020 +/- .004 (.52 +/- .10)
.032 +/- .005 (.76 +/- .13)
.062 +/- .007 (1.52 +/- .18)
.093 +/- .010 (2.29 +/- .25)
.100 +/- .010 (2.54 +/- .25)
.125 +/- .010 (3.18 +/- .25)

**Simply add a "T" to the end of the sheet material part number. See below.*

5 0 3 2	-	1 0 1 0	-	5 0 T
Profile Style		Sheet Size		Material Number with Adhesive

Rectangle

MIL-DTL-83528 Part Number	Leader Tech Part Number	Nominal Dimensions			
		A (width)		B (height)	
M83528/009X001	5409-0001-XX	.063	1.60	.042	1.07
M83528/009X002	5409-0002-XX	.095	2.41	.062	1.57
M83528/009X003	5409-0003-XX	.120	3.05	.075	1.91
M83528/009X004	5409-0004-XX	.125	3.18	.062	1.57
M83528/009X005	5409-0005-XX	.156	3.96	.062	1.57
M83528/009X006	5409-0006-XX	.250	6.35	.062	1.57
M83528/009X007	5409-0007-XX	.500	12.70	.075	1.91
M83528/009X008	5409-0008-XX	.500	12.70	.125	3.18
M83528/009X009	5409-0009-XX	.500	12.70	.188	4.78
M83528/009X010	5409-0010-XX	.750	19.05	.062	1.57
M83528/009X011	5409-0011-XX	.880	22.35	.062	1.57
M83528/009X012	5409-0012-XX	1.000	25.40	.250	6.35
M83528/009X013	5409-0013-XX	1.180	29.97	.062	1.57
N/A	5409-0100-XX	.093	2.36	.093	2.36
N/A	5409-0101-XX	.500	12.70	.250	6.35
N/A	5409-0102-XX	.650	16.51	.032	.81
N/A	5409-0103-XX	.250	6.35	.032	.81
N/A	5409-0104-XX	.063	1.60	.032	.81

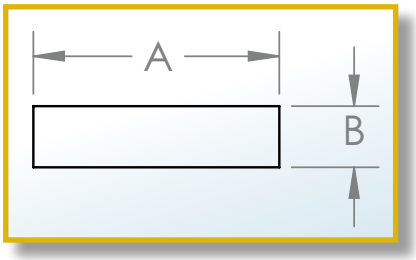

TechSIL Rectangular Extrusions come in 18 different sizes with multiple thicknesses and widths to fit your application. Conductive and non-Conductive Pressure Sensitive Adhesives can be applied to the strips for easy assembly if desired. When using a non-Conductive Adhesive only 50% of the mating surface should have PSA applied. Additional widths and thicknesses are available upon request. TechSIL extrusions are available in all sixteen compounds and special formulations are also available.

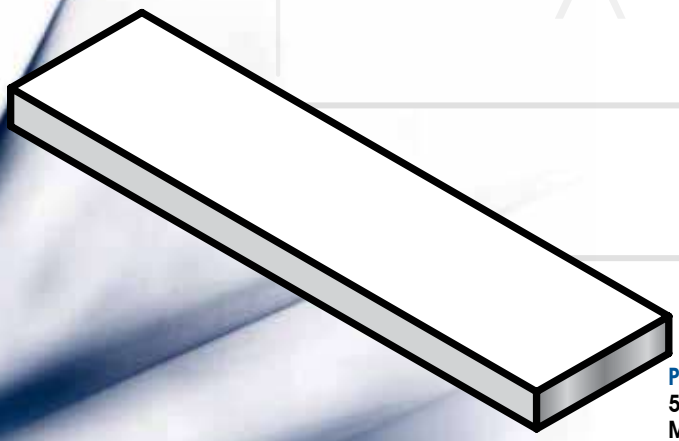

Part Numbering Example
5XXX-XXXX-MM
MM=LTE material code

Standard Tolerances for All Profiles Unless Superseded by MIL-DTL-83528	
Dimensions	Tolerance
Under 0.101" (2.6)	+/- 0.005 (0.13)
0.101" - 0.200" (2.6 to 5.1)	+/- 0.008 (0.2)
0.201" - 0.300" (5.1 to 7.6)	+/- 0.010 (0.3)
0.301" - 0.500" (7.6 to 12.7)	+/- 0.015 (0.4)
Over 0.500" (12.7)	+/- 0.020 (0.5)

Please refer to page 31 for instruction on how to add PSA adhesive to your part number.

Round

MIL-DTL-83528 Part Number	Leader Tech Part Number	Dimension A ± .005		Recommended Groove Width		Recommended Groove Height	
M83528/001X001	5401-0001-XX	.040	1.02	.050	1.27	.030	.76
M83528/001X002	5401-0002-XX	.053	1.35	.062	1.57	.040	1.02
M83528/001X003	5401-0003-XX	.062	1.57	.070	1.78	.047	1.19
M83528/001X004	5401-0004-XX	.070	1.78	.083	2.11	.050	1.27
M83528/001X005	5401-0005-XX	.080	2.03	.090	2.29	.060	1.52
M83528/001X006	5401-0006-XX	.093	2.36	.103	2.62	.070	1.78
M83528/001X007	5401-0007-XX	.103	2.62	.118	3.00	.074	1.88
M83528/001X008	5401-0008-XX	.119	3.02	.130	3.30	.090	2.29
M83528/001X009	5401-0009-XX	.125	3.18	.139	3.53	.093	2.36
M83528/001X010	5401-0010-XX	.139	3.53	.157	3.99	.101	2.56
M83528/001X011	5401-0011-XX	.188	4.78	.210	5.33	.141	3.58
M83528/001X012	5401-0012-XX	.216	5.49	.241	6.12	.160	4.06
M83528/001X013	5401-0013-XX	.250	6.35	.275	6.98	.187	4.75
N/A	5401-0100-XX	.157	3.99	.178	4.52	.122	3.10
N/A	5401-0101-XX	.090	2.29	.100	2.54	.070	1.78
N/A	5401-0102-XX	.200	5.08	.224	5.69	.155	3.94
N/A	5401-0103-XX	.258	6.55	.283	7.19	.200	5.08
N/A	5401-0104-XX	.059	1.50	.067	1.70	.045	1.14

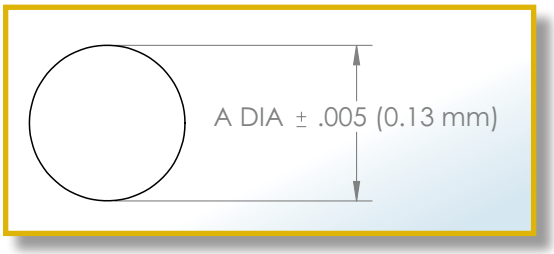

TechSIL Round and Hollow Round Extrusions come in over thirty sizes to fit your application. Grooves are recommended in your device to insure that the gasket is not over compressed. Both the Round and Hollow Round profiles can be bonded into O-Rings using an RTV cold bond or a Hot Vulcanized bond. Bonded O-Rings should have an Inside Diameter greater than 2 inches. If a smaller O-Ring is required please contact our Engineering Department. The Hollow Round profile offers a much wider operating range and lower compression forces are required. Neither shape can have Pressure Sensitive Adhesive applied. Additional sizes are available upon request. TechSIL extrusions are available in all sixteen compounds and special formulations are also available. Tape is not available.

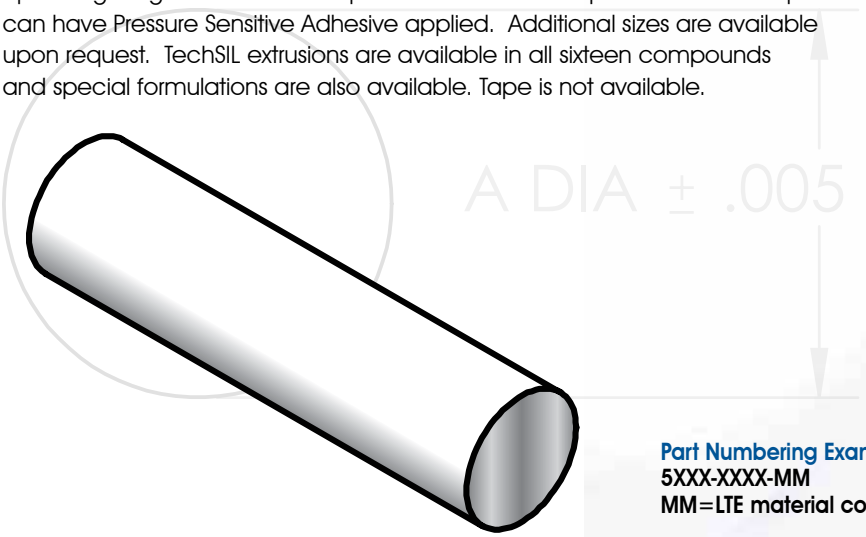

Part Numbering Example
5XXX-XXXX-MM
MM=LTE material code

Standard Tolerances for All Profiles Unless Superseded by MIL-DTL-83528

Dimensions	Tolerance
Under 0.101" (2.6)	+/- 0.005 (0.13)
0.101" - 0.200" (2.6 to 5.1)	+/- 0.008 (0.2)
0.201" - 0.300" (5.1 to 7.6)	+/- 0.010 (0.3)
0.301" - 0.500" (7.6 to 12.7)	+/- 0.015 (0.4)
Over 0.500" (12.7)	+/- 0.020 (0.5)

Hollow Round

MIL-DTL-83528 Part Number	Leader Tech Part Number	Dimensions A (OD)		Dimensions B (ID)		Recommended Groove Width		Recommended Groove Height	
M83528/011X001	5411-0001-XX	.125	3.18	.045	1.14	.130	3.30	.088	2.23
M83528/011X002	5411-0002-XX	.156	3.96	.050	1.27	.160	4.06	.109	2.76
M83528/011X003	5411-0003-XX	.250	6.35	.125	3.18	.255	5.71	.150	3.81
M83528/011X004	5411-0004-XX	.312	7.92	.192	4.88	.317	8.05	.156	3.96
M83528/011X005	5411-0005-XX	.375	9.53	.250	6.35	.380	9.65	.177	4.49
M83528/011X006	5411-0006-XX	.125	3.18	.062	1.57	.130	3.30	.077	1.95
M83528/011X007	5411-0007-XX	.103	2.62	.040	1.02	.107	2.72	.073	1.85
M83528/011X008	5411-0008-XX	.177	4.50	.079	2.01	.182	4.62	.120	3.05
N/A	5411-0100-XX	.090	2.29	.050	1.27	.095	2.41	.063	1.60
N/A	5411-0102-XX	.094	2.39	.063	1.60	.099	2.51	.066	1.68
N/A	5411-0103-XX	.060	1.52	.020	.51	.065	1.65	.042	1.07
N/A	5411-0104-XX	.125	3.18	.079	2.01	.130	3.30	.088	2.24
N/A	5411-0105-XX	.156	3.96	.080	2.03	.161	4.09	.109	2.77
N/A	5411-0108-XX	.400	10.16	.240	6.10	.405	10.29	.189	4.80

TechSIL Round and Hollow Round Extrusions come in over thirty sizes to fit your application. Grooves are recommended in your device to insure that the gasket is not over compressed. Both the Round and Hollow Round profiles can be bonded into O-Rings using an RTV cold bond or a Hot Vulcanized bond. Bonded O-Rings should have an Inside Diameter greater than 2 inches. If a smaller O-Ring is required please contact our Engineering Department. The Hollow Round profile offers a much wider operating range and lower compression forces are required. Neither shape can have Pressure Sensitive Adhesive applied. Additional sizes are available upon request. TechSIL extrusions are available in all sixteen compounds and special formulations are also available. Tape is not available.

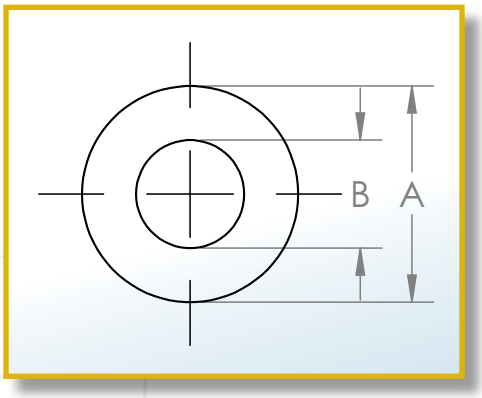

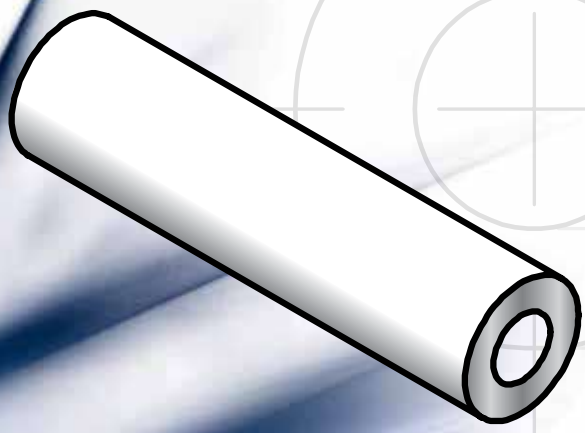

Part Numbering Example
5XXX-XXXX-MM
MM=LTE material code

Standard Tolerances for All Profiles Unless Superseded by MIL-DTL-83528	
Dimensions	Tolerance
Under 0.101" (2.6)	+/- 0.005 (0.13)
0.101" - 0.200" (2.6 to 5.1)	+/- 0.008 (0.2)
0.201" - 0.300" (5.1 to 7.6)	+/- 0.010 (0.3)
0.301" - 0.500" (7.6 to 12.7)	+/- 0.015 (0.4)
Over 0.500" (12.7)	+/- 0.020 (0.5)

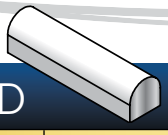

Solid D

MIL-DTL-83528 Part Number	Leader Tech Part Number	Dimension A ± .005		Dimension B ± .005 3/		Dimension C ± .005 3/		Recommended Groove Width		Recommended Groove Height	
M83528/003X001	5403-0001-XX	.031	.78	.062	1.57	.068	1.73	.065.	1.65	.051	1.29
M83528/003X002	5403-0002-XX	.047	1.19	.094	2.39	.078	1.98	.097	2.46	.059	1.50
M83528/003X003	5403-0003-XX	.039	.99	.078	1.98	.089	2.26	.080	2.03	.066	1.67
M83528/003X004	5403-0004-XX	.047	1.19	.094	2.39	.094	2.39	.097	2.46	.070	1.78
M83528/003X005	5403-0005-XX	.031	.78	.062	1.57	.100	2.54	.065	1.65	.075	1.90
M83528/003X006	5403-0006-XX	.075	1.91	.150	3.81	.110	2.79	.155	3.93	.083	2.10
M83528/003X007	5403-0007-XX	.061	1.55	.122	3.10	.135	3.43	.125	3.17	.101	2.56
M83528/003X008	5403-0008-XX	.059	1.49	.118	3.00	.156	3.96	.120	3.04	.117	2.97
M83528/003X009	5403-0009-XX	.078	1.98	.156	3.96	.156	3.96	.160	4.06	.117	2.97
M83528/003X010	5403-0010-XX	.089	2.26	.178	4.52	.175	4.45	.181	4.60	.131	3.32
M83528/003X011	5403-0011-XX	.094	2.39	.188	4.78	.188	4.78	.193	4.90	.141	3.58
M83528/003X012	5403-0012-XX	.125	3.18	.250	6.35	.250	6.35	.255	6.47	.187	4.75

TechSIL Solid and Hollow "D" Extrusions are available in nineteen different profiles. They can be used in a groove to control the compression forces or can have either Conductive or non-Conductive Pressure Sensitive Adhesive applied for easy assembly. When using a non-Conductive Adhesive only 50% of the mating surface should have PSA applied. Both the Solid and Hollow variations can be bonded into O-Rings or Picture Frame gaskets using an RTV cold bond or a Hot Vulcanized bond. The Hollow "D" profiles offers a much wider operating range and lower compression forces are required than for the Solid versions. Additional sizes are available upon request. TechSIL extrusions are available in all sixteen compounds and special formulations are also available.

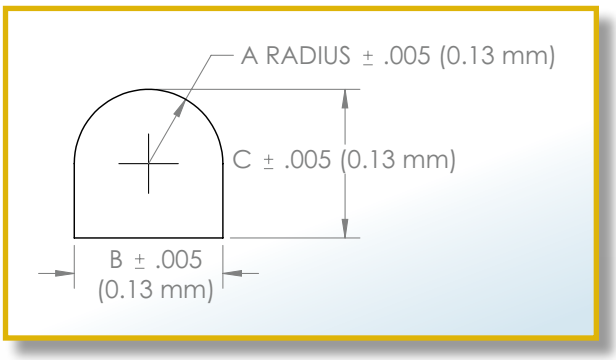

3/ for dimensions over .200 the tolerance shall be ±.008

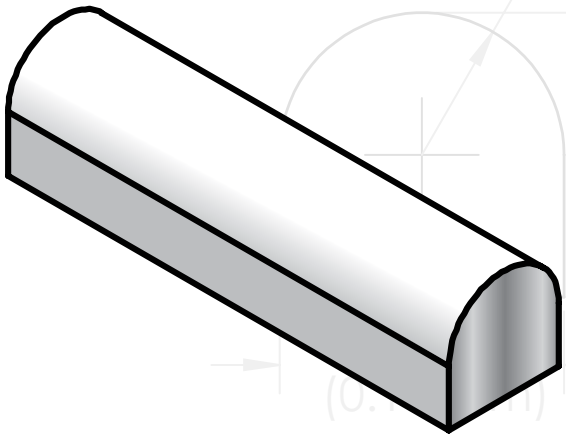

Part Numbering Example
5XXX-XXXX-MM
MM=LTE material code

Standard Tolerances for All Profiles Unless Superseded by MIL-DTL-83528	
Dimensions	Tolerance
Under 0.101" (2.6)	+/- 0.005 (0.13)
0.101" - 0.200" (2.6 to 5.1)	+/- 0.008 (0.2)
0.201" - 0.300" (5.1 to 7.6)	+/- 0.010 (0.3)
0.301" - 0.500" (7.6 to 12.7)	+/- 0.015 (0.4)
Over 0.500" (12.7)	+/- 0.020 (0.5)

Please refer to page 31 for instruction on how to add PSA adhesive to your part number.

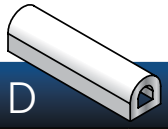

Hollow D

MIL-DTL-83528 Part Number	Leader Tech Part Number	Nominal Dimensions								Configuration	Recommended Groove Width		Recommended Groove Height	
		A		B		C		D						
M83528/007X001	5407-0001-XX	.156	*3.96*	.078	*1.98*	.078	*1.98*	.045	*1.14*	A	.160	*4.06*	.093	*2.36*
M83528/007X002	5407-0002-XX	.187	*4.75*	.093	*2.36*	.093	*2.36*	.050	*1.27*	A	.193	*4.90*	.107	*2.71*
M83528/007X003	5407-0003-XX	.312	*7.92*	.156	*3.96*	.156	*3.96*	.062	*1.57*	A	.320	*8.12*	.187	*4.75*
M83528/007X004	5407-0004-XX	.312	*7.92*	.156	*3.96*	.156	*3.96*	.062	*1.57*	B	.320	*8.12*	.187	*4.75*
M83528/007X005	5407-0005-XX	.312	*7.92*	.200	*5.08*	.112	*2.84*	.062	*1.57*	A	.320	*8.12*	.177	*4.49*
M83528/007X006	5407-0006-XX	.487	*12.37*	.080	*2.03*	.244	*6.20*	.080	*2.03*	A	.500	*12.70*	.250	*6.35*
M83528/007X007	5407-0007-XX	.250	*6.35*	.125	*3.18*	.125	*3.18*	.065	*1.65*	A	.255	*6.47*	.150	*3.81*

TechSIL Solid and Hollow "D" Extrusions are available in nineteen different profiles. They can be used in a groove to control the compression forces or can have either Conductive or non-Conductive Pressure Sensitive Adhesive applied for easy assembly. When using a non-Conductive Adhesive only 50% of the mating surface should have PSA applied. Both the Solid and Hollow variations can be bonded into O-Rings or Picture Frame gaskets using an RTV cold bond or a Hot Vulcanized bond. The Hollow "D" profiles offers a much wider operating range and lower compression forces are required than for the Solid versions. Additional sizes are available upon request. TechSIL extrusions are available in all sixteen compounds and special formulations are also available.

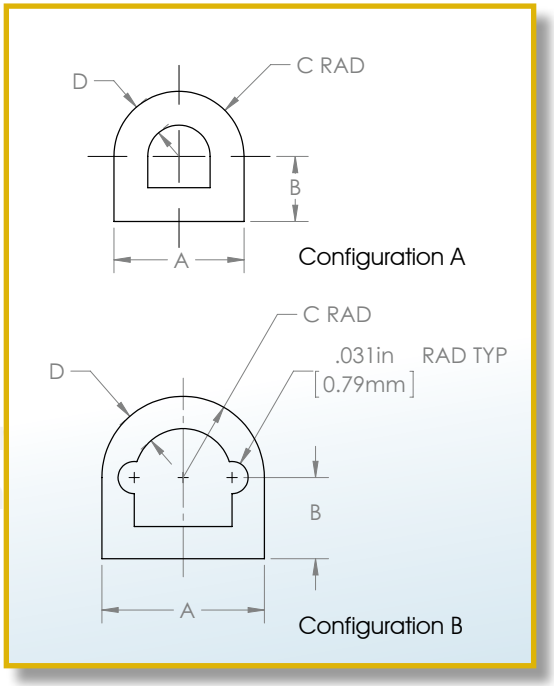

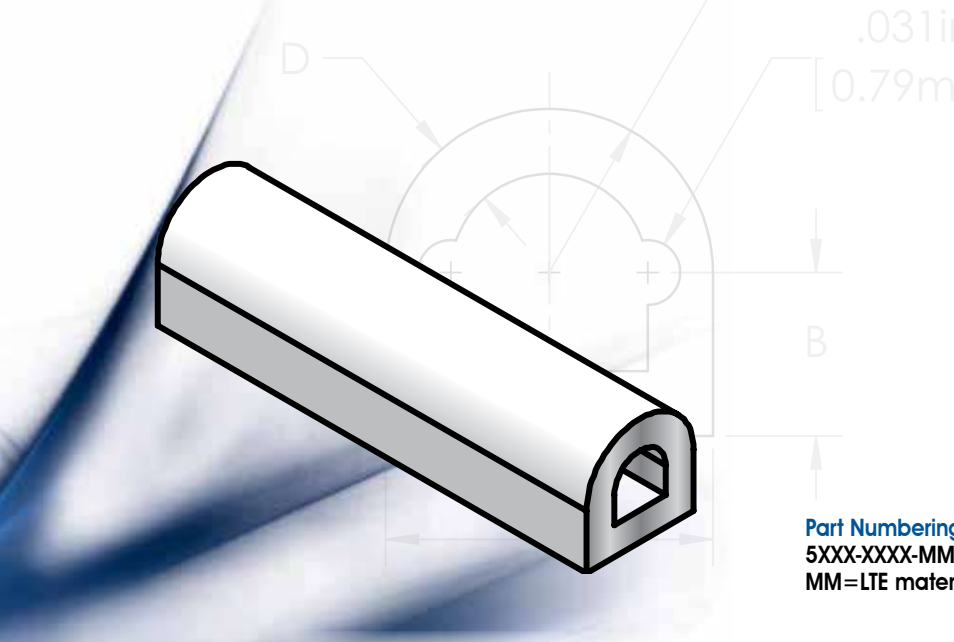

Part Numbering Example
5XXX-XXXX-MM
MM=LTE material code

Standard Tolerances for All Profiles Unless Superseded by MIL-DTL-83528

Dimensions	Tolerance
Under 0.101" (2.6)	+/- 0.005 (0.13)
0.101" - 0.200" (2.6 to 5.1)	+/- 0.008 (0.2)
0.201" - 0.300" (5.1 to 7.6)	+/- 0.010 (0.3)
0.301" - 0.500" (7.6 to 12.7)	+/- 0.015 (0.4)
Over 0.500" (12.7)	+/- 0.020 (0.5)

Please refer to page 31 for instruction on how to add PSA adhesive to your part number.

Hollow P

MIL-DTL-83528 Part Number	Leader Tech Part Number	Nominal Dimensions							
		A		B		C		D	
M83528/008X001	5408-0001-XX	.200	5.08	.080	2.03	.065	1.65	.062	1.57
M83528/008X002	5408-0002-XX	.250	6.35	.125	3.18	.250	6.35	.062	1.57
M83528/008X003	5408-0003-XX	.250	6.35	.125	3.18	.375	9.53	.062	1.57
M83528/008X004	5408-0004-XX	.250	6.35	.150	3.96	.375	9.53	.062	1.57
M83528/008X005	5408-0005-XX	.312	7.92	.187	4.75	.563	14.30	.062	1.57
M83528/008X006	5408-0006-XX	.360	9.14	.255	6.48	.420	10.67	.070	1.79
M83528/008X007	5408-0007-XX	.200	5.08	.080	2.03	.275	6.99	.062	1.57
M83528/008X008	5408-0008-XX	.250	6.35	.125	3.18	.625	15.88	.062	1.57

TechSIL Hollow "P" Extrusions are available in eight different sizes. They can be used in a groove to control the compression forces or can have either Conductive or non-Conductive Pressure Sensitive Adhesive applied for easy assembly. When using a non-Conductive Adhesive only 80% of the mating surface should have PSA applied. PSA can be applied to either side of the gasket so that it can be used in several different positions on your device. Hollow "P" extrusions can be bonded into Picture Frame gaskets using an RTV cold bond or a Hot Vulcanized bond. The Hollow "P" profiles offers a wide operating range and low compression force. Solid versions and additional sizes are available upon request. TechSIL extrusions are available in all sixteen compounds and special formulations are also available.

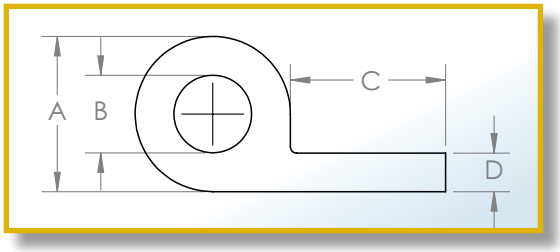

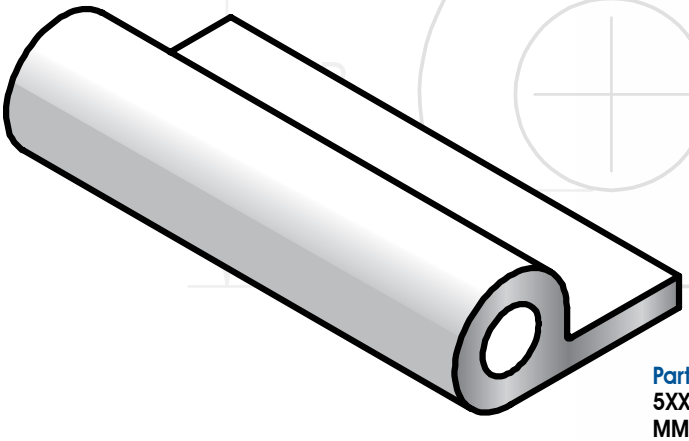

Part Numbering Example
5XXX-XXXX-MM
MM=LTE material code

Standard Tolerances for All Profiles Unless Superseded by MIL-DTL-83528

Dimensions	Tolerance
Under 0.101" (2.6)	+/- 0.005 (0.13)
0.101" - 0.200" (2.6 to 5.1)	+/- 0.008 (0.2)
0.201" - 0.300" (5.1 to 7.6)	+/- 0.010 (0.3)
0.301" - 0.500" (7.6 to 12.7)	+/- 0.015 (0.4)
Over 0.500" (12.7)	+/- 0.020 (0.5)

Please refer to page 31 for instruction on how to add PSA adhesive to your part number.

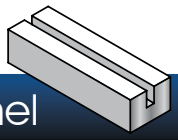

U Channel

MIL-DTL-83528 Part Number	Leader Tech Part Number	Nominal Dimensions							
		A		B		C		D	
M83528/010X001	5410-0001-XX	.100	2.54	.100	2.54	.034	.86	.033	.84
M83528/010X002	5410-0002-XX	.126	3.20	.110	2.79	.025	.64	.050	1.27
M83528/010X003	5410-0003-XX	.126	3.20	.225	5.72	.020	.51	.075	1.91
M83528/010X004	5410-0004-XX	.156	3.96	.156	3.96	.062	1.57	.047	1.19
M83528/010X005	5410-0005-XX	.175	4.45	.156	3.96	.047	1.19	.075	1.91
M83528/010X006	5410-0006-XX	.327	8.31	.235	5.97	.062	1.57	.115	2.92

TechSIL U Channel Extrusions come in six different sizes with multiple thicknesses and widths to fit your application. Conductive and non-Conductive Pressure Sensitive Adhesives can be applied to the strips for easy assembly if desired. When using a non-Conductive Adhesive only 50% of the mating surface should have PSA applied. Additional widths and thicknesses are available upon request. TechSIL extrusions are available in all sixteen compounds and special formulations are also available.

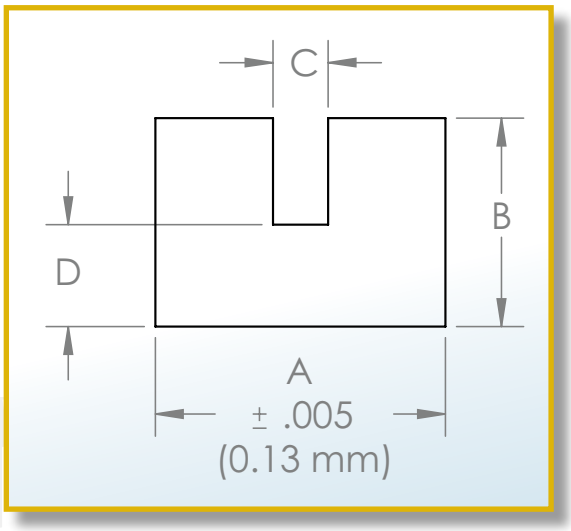

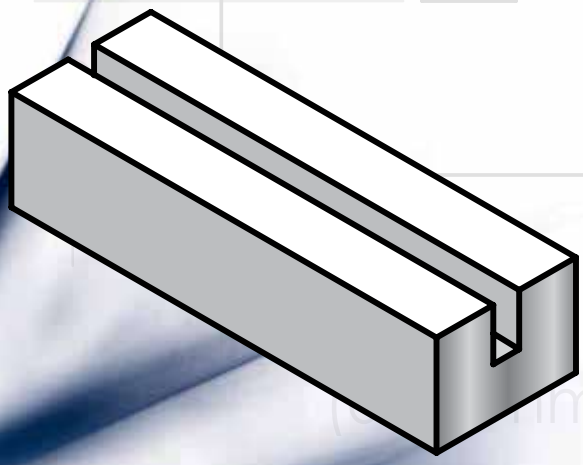

Part Numbering Example
5XXX-XXXX-MM
MM=LTE material code

Standard Tolerances for All Profiles Unless Superseded by MIL-DTL-83528	
Dimensions	Tolerance
Under 0.101" (2.6)	+/- 0.005 (0.13)
0.101" - 0.200" (2.6 to 5.1)	+/- 0.008 (0.2)
0.201" - 0.300" (5.1 to 7.6)	+/- 0.010 (0.3)
0.301" - 0.500" (7.6 to 12.7)	+/- 0.015 (0.4)
Over 0.500" (12.7)	+/- 0.020 (0.5)

Please refer to page 31 for instruction on how to add PSA adhesive to your part number.

O-Rings

MIL-DTL-83528 Part Number	Leader Tech Part Number	Dimension B 3/		Dimension C 5/	
M83528/002X007	5302-0007-XX	.070	1.78	.145	3.68
M83528/002X011	5302-0011-XX	.070	1.78	.301	7.65
M83528/002X012	5302-0012-XX	.070	1.78	.364	9.25
M83528/002X013	5302-0013-XX	.070	1.78	.426	10.82
M83528/002X014	5302-0014-XX	.070	1.78	.489	12.42
M83528/002X015	5302-0015-XX	.070	1.78	.551	13.99
M83528/002X017	5302-0017-XX	.070	1.78	.676	17.17
M83528/002X018	5302-0018-XX	.070	1.78	.739	18.77
M83528/002X019	5302-0019-XX	.070	1.78	.801	20.34
M83528/002X020	5302-0020-XX	.070	1.78	.864	21.94
M83528/002X021	5302-0021-XX	.070	1.78	.926	23.52
M83528/002X022	5302-0022-XX	.070	1.78	.989	25.12
M83528/002X024	5302-0024-XX	.070	1.78	1.114	28.30
M83528/002X026	5302-0026-XX	.070	1.78	1.239	31.47
M83528/002X028	5302-0028-XX	.070	1.78	1.364	34.65
M83528/002X114	5302-0114-XX	.103	2.62	.612	15.54
M83528/002X115	5302-0115-XX	.103	2.62	.676	17.17
M83528/002X117	5302-0117-XX	.103	2.62	.799	20.29
M83528/002X126	5302-0126-XX	.103	2.62	1.362	34.59
M83528/002X128	5302-0128-XX	.103	2.62	1.487	37.77
M83528/002X132	5302-0132-XX	.103	2.62	1.737	44.12
M83528/002X134	5302-0134-XX	.103	2.62	1.862	47.30
M83528/002X142	5302-0142-XX	.103	2.62	2.362	59.99
M83528/002X145	5302-0145-XX	.103	2.62	2.550	64.77
M83528/002X155	5302-0155-XX	.103	2.62	3.987	101.27

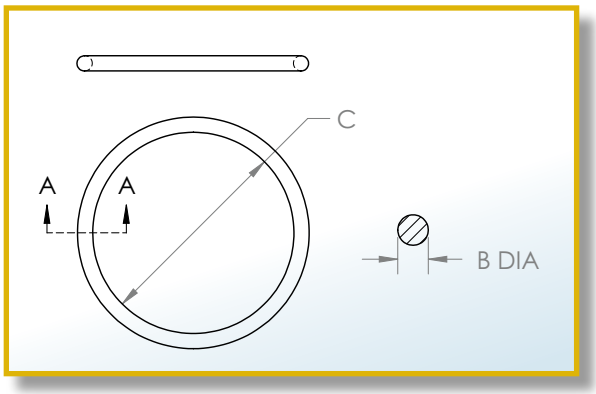

TechSIL Round Profile Molded O-Rings come in over fifty sizes to fit your specific application. They come with cross sections ranging from .030" to .139" and Inside Diameters ranging from .145" to 3.987". TechSIL molded parts can be molded out of all sixteen standard compounds. The O-Rings can be used with or without a groove. Additional sizes and compounds are available upon request.

3/ Tolerance on dimension B shall be ±.003 for parts with a Ø of .070 and below; ±.005 for diameters from .101 to .200

5/ Tolerance on dimension C shall be ±.010 for parts from .0 00 to 1.500; ±.015 for parts from over 1.500 to 2.500; ±.020 for parts fom over 2.500 to 4.500

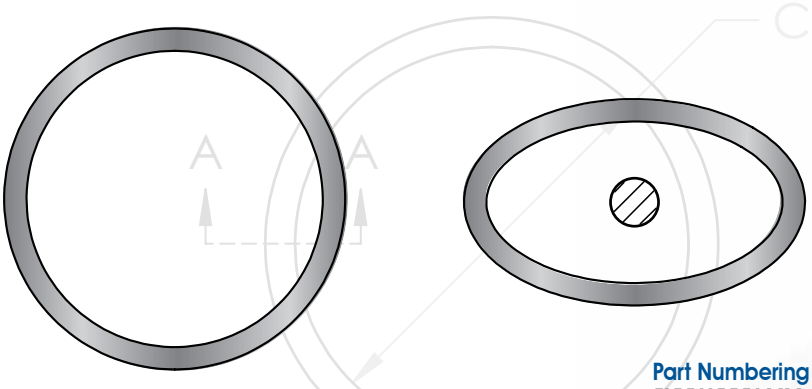

Part Numbering Example
5XXX-XXXX-MM
MM=LTE material code

Standard Tolerances for All Profiles Unless Superseded by MIL-DTL-83528

Dimensions	Tolerance
Under 0.101" (2.6)	+/- 0.005 (0.13)
0.101" - 0.200" (2.6 to 5.1)	+/- 0.008 (0.2)
0.201" - 0.300" (5.1 to 7.6)	+/- 0.010 (0.3)
0.301" - 0.500" (7.6 to 12.7)	+/- 0.015 (0.4)
Over 0.500" (12.7)	+/- 0.020 (0.5)

O-Rings

MIL-DTL-83528 Part Number	Leader Tech Part Number	Dimension B 3/		Dimension C 4/	
M83528/005X001	5305-0001-XX	.030	.76	.442	11.23
M83528/005X002	5305-0002-XX	.030	.76	.577	14.66
M83528/005X003	5305-0003-XX	.030	.76	.692	17.58
M83528/005X004	5305-0004-XX	.030	.76	.817	20.75
M83528/005X005	5305-0005-XX	.039	.99	.425	10.80
M83528/005X006	5305-0006-XX	.048	1.22	.295	7.49
M83528/005X007	5305-0007-XX	.050	1.27	.533	13.54
M83528/005X008	5305-0008-XX	.051	1.30	.446	11.33
M83528/005X009	5305-0009-XX	.057	1.45	.415	10.54
M83528/005X010	5305-0010-XX	.063	1.60	.541	13.74
M83528/005X011	5305-0011-XX	.063	1.60	.648	16.46
M83528/005X012	5305-0012-XX	.068	1.73	.847	21.51
M83528/005X013	5305-0013-XX	.068	1.73	1.182	30.02
M83528/005X014	5305-0014-XX	.068	1.73	3.165	80.39
M83528/005X015	5305-0015-XX	.070	1.78	.495	12.57
M83528/005X016	5305-0016-XX	.070	1.78	.610	15.49
M83528/005X017	5305-0017-XX	.070	1.78	.635	16.13
M83528/005X018	5305-0018-XX	.070	1.78	.667	16.94
M83528/005X019	5305-0019-XX	.070	1.78	.860	21.84
M83528/005X020	5305-0020-XX	.070	1.78	1.230	31.24
M83528/005X021	5305-0021-XX	.103	2.62	1.040	26.42
M83528/005X022	5305-0022-XX	.103	2.62	1.612	40.94
M83528/005X023	5305-0023-XX	.103	2.62	1.790	45.47

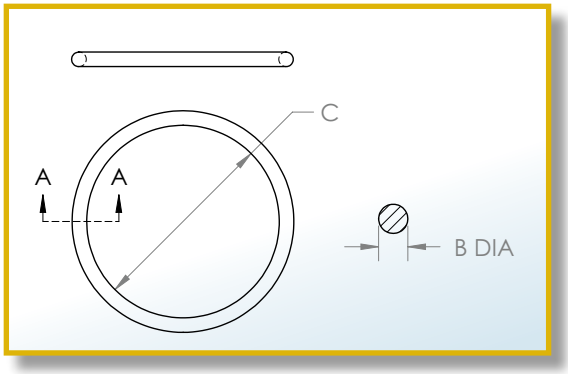

TechSIL Round Profile Molded O-Rings come in over fifty sizes to fit your specific application. They come with cross sections ranging from .030" to .139" and Inside Diameters ranging from .145" to 3.987". TechSIL molded parts can be molded out of all sixteen standard compounds. The O-Rings can be used with or without a groove. Additional sizes and compounds are available upon request.

3/ Tolerance on dimension B shall be ±.003 for parts with a Ø of .070 and below; ±.005 for diameters from .101 to .200

4/ Tolerance on dimension C shall be ±.010 for parts from .000 to 1.500; ±.015 for parts from over 1.500 to 2.500; ±.020 for parts fom over 2.500 to 4.500

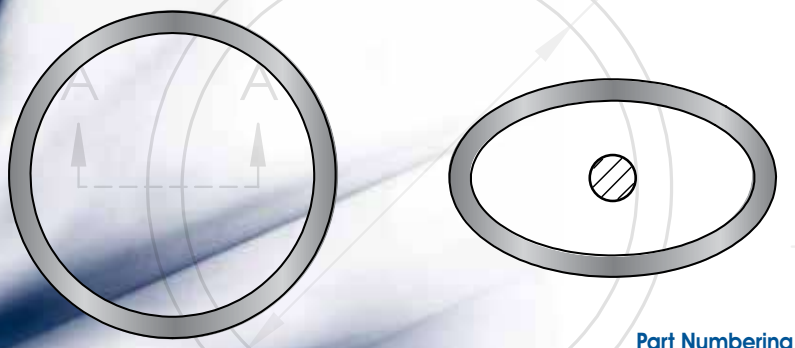

Part Numbering Example
5XXX-XXXX-MM
MM=LTE material code

Standard Tolerances for All Profiles Unless Superseded by MIL-DTL-83528

Dimensions	Tolerance
Under .070" (1.8)	+/- 0.003 (0.07)
.071" - 0.100" (1.8 to 2.5)	+/- 0.005 (0.13)
0.101" - 0.200" (2.6 to 5.1)	+/- 0.008 (0.2)
0.201" - 0.300" (5.1 to 7.6)	+/- 0.010 (0.3)
0.301" - 0.500" (7.6 to 12.7)	+/- 0.015 (0.4)
Over 0.500" (12.7)	+/- 0.020 (0.5)

O-Rings

MIL-DTL-83528 Part Number	Leader Tech Part Number	Dimensions (Configuration D)			
		D (ID)		T	
M83528/013X022	5313-0022-XX	2.011 ± .018	*51.08 .46*	.139 ± .004	*3.53 .10*
M83528/013X029	5313-0029-XX	2.683 ± .024	*68.15 .61*	.115 ± .004	*2.92 .10*

TechSIL Round Profile Molded O-Rings come in over fifty sizes to fit your specific application. They come with cross sections ranging from .030" to .139" and Inside Diameters ranging from .145" to 3.987". TechSIL molded parts can be molded out of all sixteen standard compounds. The O-Rings can be used with or without a groove. Additional sizes and compounds are available upon request.

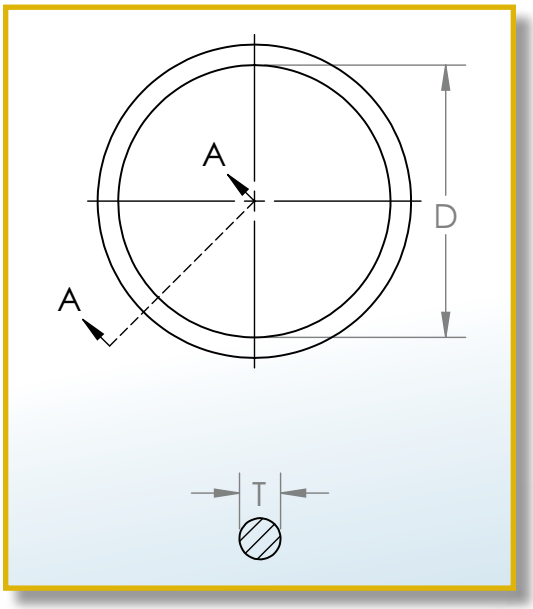

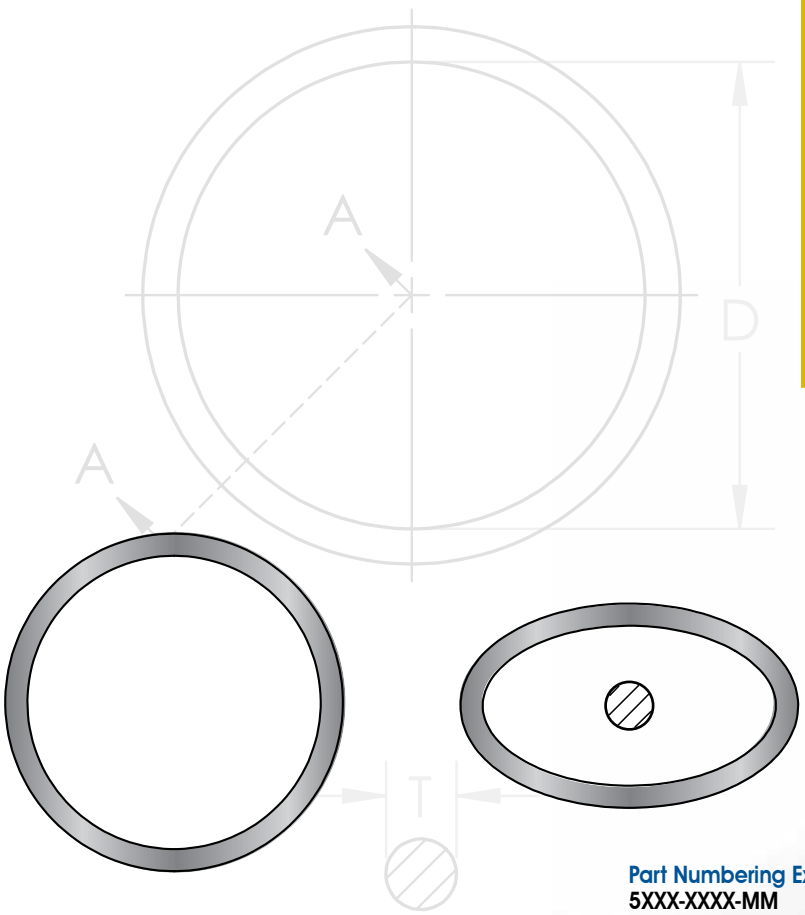

Part Numbering Example
5XXX-XXXX-MM
MM=LTE material code

Standard Tolerances for All Profiles Unless Superseded by MIL-DTL-83528	
Dimensions	Tolerance
Under .070" (1.8)	+/- 0.003 (0.07)
.071" - 0.100" (1.8 to 2.5)	+/- 0.005 (0.13)
0.101" - 0.200" (2.6 to 5.1)	+/- 0.008 (0.2)
0.201" - 0.300" (5.1 to 7.6)	+/- 0.010 (0.3)
0.301" - 0.500" (7.6 to 12.7)	+/- 0.015 (0.4)
Over 0.500" (12.7)	+/- 0.020 (0.5)

O-Rings D Cross Section

MIL-DTL-83528 Part Number	Leader Tech Part Number	Dimensions (Configuration E)							
		A		B		D (ID)		T	
M83528/013X002	5313-0002-XX	.056	1.42	.041	1.04	.410	10.41	.082	2.08
M83528/013X004	5313-0004-XX	.048	1.22	.039	0.99	.587	14.91	.078	1.98
M83528/013X006	5313-0006-XX	.125	3.18	.078	1.98	.885	22.48	.155	3.94
M83528/013X008	5313-0008-XX	.065	1.65	.049	1.24	1.122	28.50	.099	2.51
M83528/013X011	5313-0011-XX	.088	2.24	.048	1.22	1.340	34.04	.095	2.41
M83528/013X012	5313-0012-XX	.077	1.96	.058	1.47	1.310	33.27	.115	2.92
M83528/013X014	5313-0014-XX	.085	2.16	.048	1.22	1.392	35.36	.095	2.41
M83528/013X017	5313-0017-XX	.078	2.16	.053	1.35	1.550	39.37	.105	2.67
M83528/013X036	5313-0036-XX	.188	4.78	.120	3.05	3.910 ± .026	99.31 .66	.240	6.10

TechSIL "D" Profile Molded O-Rings come in nine different sizes. They come with foot prints ranging from .078" to .240" and have Inside Diameters ranging from .410" to 3.910". TechSIL molded parts can be molded out of all sixteen standard compounds. The O-Rings can be used with or without a groove. Additional sizes and compounds are available upon request.

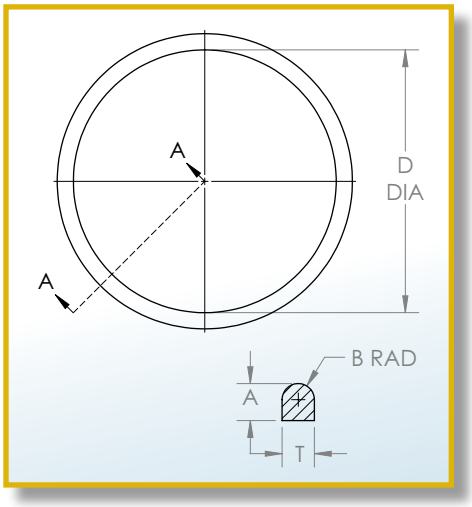

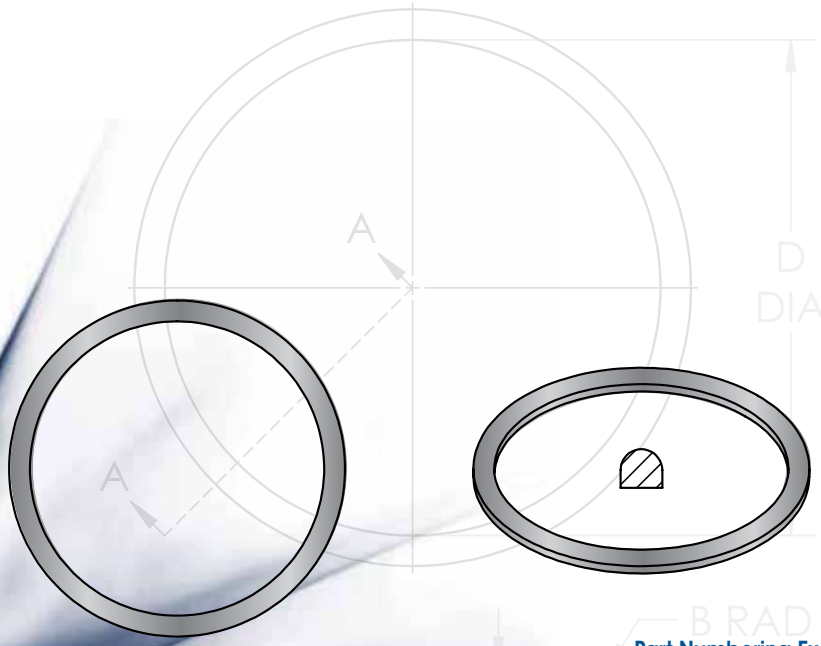

Part Numbering Example
5XXX-XXXX-MM
MM=LTE material code

Standard Tolerances for All Profiles Unless Superseded by MIL-DTL-83528	
Dimensions	Tolerance
Under .070" (1.8)	+/- 0.003 (0.07)
.071"-0.100" (1.8-2.5)	+/- 0.005 (0.13)
0.101" - 0.200" (2.6 to 5.1)	+/- 0.008 (0.2)
0.201" - 0.300" (5.1 to 7.6)	+/- 0.010 (0.3)
0.301" - 0.500" (7.6 to 12.7)	+/- 0.015 (0.4)
Over 0.500" (12.7)	+/- 0.020 (0.5)

Please refer to page 31 for instruction on how to add PSA adhesive to your part number.

Rectangle D Cross Section

MIL-DTL-83528 Part Number	Leader Tech Part Number	W				L				H		T	
		MIN		MAX		MIN		MAX		MIN	MAX	MIN	MAX
M83528/006X001	5306-0001-XX	.285	7.24	.295	7.49	.983	24.97	.993	25.22	,078	.088	.122	.132
M83528/006X002	5306-0002-XX	.485	12.32	.495	12.57	.983	24.97	.993	25.22	,078	.088	.122	.132
M83528/006X003	5306-0003-XX	.619	15.72	.629	15.98	1.243	31.57	1.253	31.83	,078	.088	.122	.132
M83528/006X004	5306-0004-XX	.815	20.70	.845	21.46	2.985	75.82	3.015	76.58	,078	.088	.122	.132
M83528/006X005	5306-0005-XX	1.325	33.66	1.355	34.42	5.265	133.73	5.295	134.49	,078	.088	.122	.132
N/A	5306-0100-XX	.449	11.35	.489	12.42	.925	23.50	.965	24.51	.093	.103	.093	.103

TechSIL "D" Profile Molded Rectangular Gaskets come in five different sizes and are ideal for use with rectangular connectors. They come with a .127" foot print and a height of .083. These "D" Profile Molded Rectangular Gaskets can be molded out of all sixteen standard compounds. These Rectangular gaskets can be used with or without a groove. Additional sizes and compounds are available upon request.

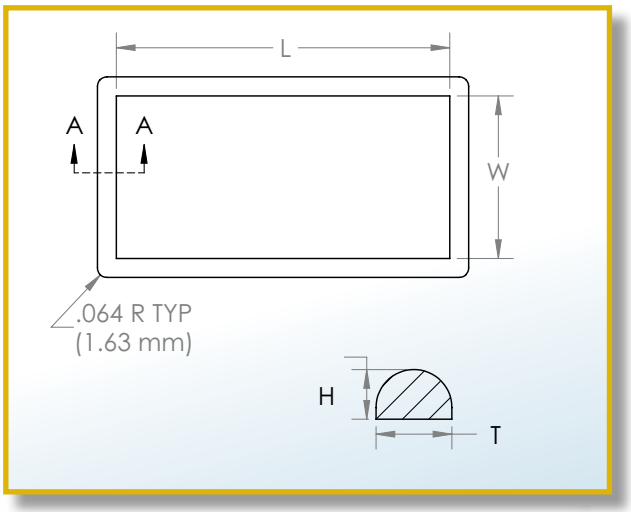

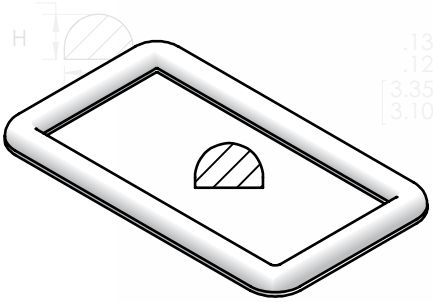

Part Numbering Example
5XXX-XXXX-MM
MM=LTE material code

Standard Tolerances for All Profiles Unless Superseded by MIL-DTL-83528

Dimensions	Tolerance
Under .070" (1.8)	+/- 0.003 (0.07)
.071" - 0.100" (1.8 to 2.5)	+/- 0.005 (0.13)
0.101" - 0.200" (2.6 to 5.1)	+/- 0.008 (0.2)
0.201" - 0.300" (5.1 to 7.6)	+/- 0.010 (0.3)
0.301" - 0.500" (7.6 to 12.7)	+/- 0.015 (0.4)
Over 0.500" (12.7)	+/- 0.020 (0.5)

Please refer to page 31 for instruction on how to add PSA adhesive to your part number.

Rectangle O Cross Section

MIL-DTL-83528 Part Number	Leader Tech Part Number	Dimensions (Configuration C)					
		A		B		T	
M83528/013X013	5313-0013-XX	1.368 ± .012	34.75 .03	.868 ± .010	22.05 .25	.103 ± .003	2.62 .08
M83528/013X018	5313-0018-XX	1.616 ± .015	41.05 .38	.991 ± 0.010	25.17 .25	.103 ± .003	2.62 .08
M83528/013X023	5313-0023-XX	1.866 ± .015	41.05 .38	1.116 ± .012	28.35 .30	.103 ± .003	2.62 .08
M83528/013X030	5313-0030-XX	2.449 ± .020	62.20 .51	1.449 ± .013	36.80 .33	.139 ± .004	3.53 .10
M83528/013X037	5313-0037-XX	3.451 ± .024	87.66 .61	1.951 ± .018	49.56 .46	.139 ± .004	3.53 .10

TechSIL Round Profile Molded Rectangular Gaskets come in five different sizes and are ideal for use with rectangular connectors. They come with a .103" or 139" cross section and four different lengths and widths. These Round Profile Molded Rectangular gaskets can be molded out of all twelve of the MIL-DTL-83528 compounds. These Rectangular gaskets can be used with or without a groove. Additional sizes are available upon request.

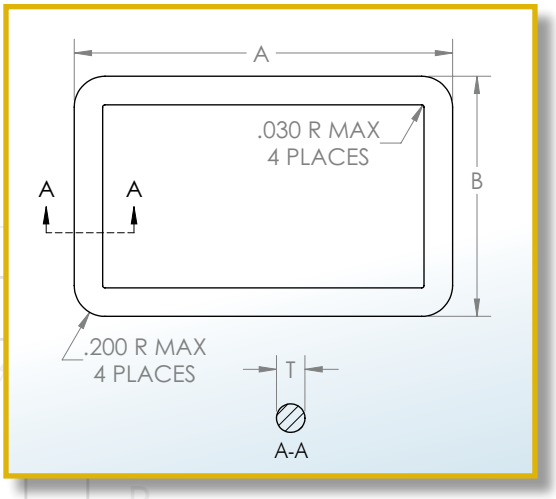

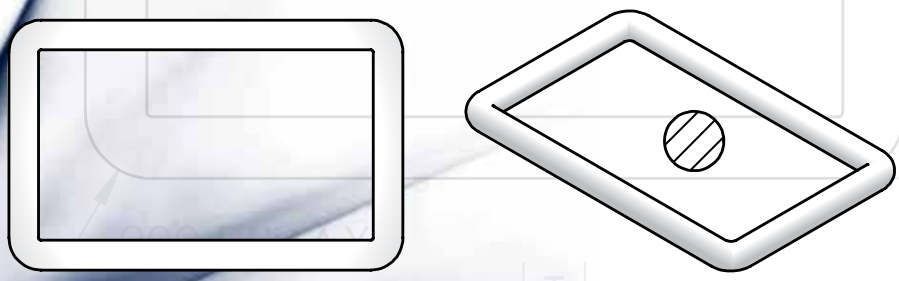

Part Numbering Example
5XXX-XXXX-MM
MM=LTE material code

Standard Tolerances for All Profiles Unless Superseded by MIL-DTL-83528

Dimensions	Tolerance
Under .070" (1.8)	+/- 0.003 (0.07)
.071" - 0.100" (1.8 to 2.5)	+/- 0.005 (0.13)
0.101" - 0.200" (2.6 to 5.1)	+/- 0.008 (0.2)
0.201" - 0.300" (5.1 to 7.6)	+/- 0.010 (0.3)
0.301" - 0.500" (7.6 to 12.7)	+/- 0.015 (0.4)
Over 0.500" (12.7)	+/- 0.020 (0.5)

Waveguide A

MIL-DTL-83528 Part Number	Leader Tech Part Number	Dimensions (Configuration A)													
		A ± .015 (0.38)		B ± .015 (0.38)		C + .015 (0.38) -.000 (0.00)		D + .015 (0.38) - .000 (0.00)		E ± .010 (0.25)		T ± .003 (0.08)		F Radius ± .010 (0.25)	
M83528/013X001	5313-0001-XX	.750	19.05	.750	19.05	.145	3.68	.285	7.24	.116	2.95	.027	.69	.469	11.91
M83528/013X003	5313-0003-XX	.875	22.23	.875	22.23	.175	4.45	.425	10.80	.116	2.95	.027	.69	.563	14.30
M83528/013X005	5313-0005-XX	1.313	33.35	1.313	33.35	.630	16.00	.320	8.13	.140	3.56	.027	.69	.875	22.23
M83528/013X007	5313-0007-XX	1.496	38.00	1.496	38.00	.760	19.30	.385	9.78	.155	3.94	.027	.69	.450	11.43
M83528/013X009	5313-0009-XX	1.625	41.28	1.625	41.28	.905	22.99	.405	10.29	.169	4.29	.027	.69	.469	11.91
M83528/013X010	5313-0010-XX	1.594	40.49	2.094	53.19	.405	10.29	.905	22.99	.169	4.29	.027	.69	.250	6.35
M83528/013X015	5313-0015-XX	1.875	47.63	1.875	47.63	1.130	28.70	.505	12.83	.180	4.57	.027	.69	1.15	29.21
M83528/013X016	5313-0016-XX	1.750	44.45	2.500	63.50	.505	12.83	1.130	28.70	.171	4.34	.027	.69	.250	6.35
M83528/013X020	5313-0020-XX	1.937	49.20	2.687	68.25	.633	16.08	1.380	35.05	.206	5.23	.027	.69	.250	6.35
M83528/013X021	5313-0021-XX	1.531	38.89	2.281	57.94	.632	16.05	1.382	35.10	.150	3.81	.027	.69	.125	3.18
M83528/013X024	5313-0024-XX	2.438	61.93	3.188	80.98	.805	20.45	1.600	40.64	.257	6.53	.027	.69	.313	7.95
M83528/013X025	5313-0025-XX	1.750	44.45	2.500	63.50	.800	20.32	1.600	40.64	.160 .150	4.06 3.81	.027	.69	.125	3.18
M83528/013X027	5313-0027-XX	3.500	88.90	2.500	63.50	1.880	47.75	.880	22.35	.266	6.76	.027	.69	.313	7.95
M83528/013X028	5313-0028-XX	1.784	45.31	2.781	70.64	.882	22.40	1.882	47.80	.156 .141	3.96 3.58	.027	.69	.125	3.18
M83528/013X031	5313-0031-XX	2.750	69.85	3.875	98.43	1.155	29.34	2.300	58.42	.270	6.86	.027	.69	.312	7.92
M83528/013X032	5313-0032-XX	2.000	50.80	3.156	80.16	1.155	29.34	2.300	58.42	.150	3.81	.027	.69	.125	3.18
M83528/013X034	5313-0034-XX	4.500	114.30	3.000	76.20	2.850	72.39	1.350	34.29	.266	6.76	.027	.69	.313	7.95
M83528/013X035	5313-0035-XX	3.844	97.64	2.344	59.54	2.850	72.39	1.350	34.29	.172 .188	4.37 4.78	.027	.69	.125	3.18
M83528/013X038	5313-0038-XX	3.750	95.25	5.440	138.18	1.710	43.43	3.410	86.61	.264 .250	6.71 6.35	.027	.69	.250	6.35
M83528/013X039	5313-0039-XX	3.750	95.25	5.438	138.13	1.710	43.43	3.410	86.61	.266	6.76	.027	.69	.250	6.35
M83528/013X040	5313-0040-XX	4.188	106.38	6.344	161.14	2.160	54.86	4.310	109.47	.266 .281	6.76 7.14	.027	.69	.250	6.35
M83528/013X041	5313-0041-XX	6.344	161.14	4.188	106.38	4.310	109.47	2.160	54.86	.266	6.76	.027	.69	.250	6.35
M83528/013X042	5313-0042-XX	5.438	138.13	8.688	220.68	3.260	82.80	6.510	165.35	.250 .328	6.35 8.33	.027	.69	.250	6.35

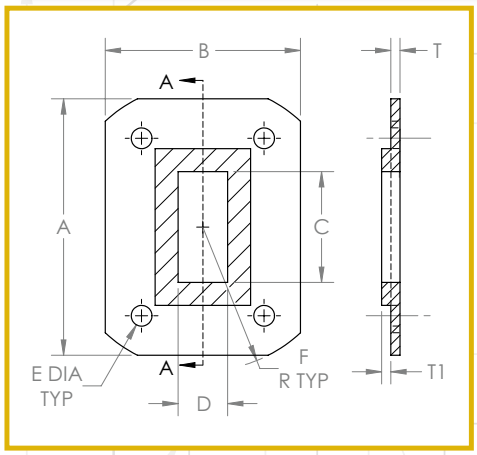

TechSIL Molded Waveguide Gaskets come in twenty six different sizes and are available in round or rectangular shapes. They come with a .027" thickness and are available in several different lengths and widths. These Molded Waveguide Gaskets can be molded out of all twelve of the MIL-DTL-83528 compounds. Additional sizes are available upon request.

Part Numbering Example
5XXX-XXXX-MM
MM=LTE material code

Standard Tolerances for All Profiles Unless Superseded by MIL-DTL-83528

Dimensions	Tolerance
Under .070" (1.8)	+/- 0.003 (0.07)
.071"-0.100" (1.8-2.5)	+/- 0.005 (0.13)
0.101" - 0.200" (2.6 to 5.1)	+/- 0.008 (0.20)
0.201" - 0.300" (5.1 to 7.6)	+/- 0.010 (0.30)
0.301" - 0.500" (7.6 to 12.7)	+/- 0.015 (0.40)
Over 0.500" (12.7)	+/- 0.020 (0.50)

Please refer to page 31 for instruction on how to add PSA adhesive to your part number.

Waveguide B

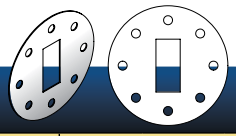

MIL-DTL-83528 Part Number	Leader Tech Part Number	Dimensions (Configuration B)									
		A ± .015 (.38)		B + .015 (.38) -.000 (.00)		C + .015 (.38) - .000 (.00)		D ± .010 (.25)		T ± .005 (.13)	
M83528/013X019	5313-0019-XX	3.125	*79.38*	.632	*16.05*	1.382	*35.10*	.234	*5.94*	.027	*.69*
M83528/013X026	5313-0026-XX	3.625	*92.08*	.882	*22.40*	1.882	*47.80*	.234	*5.94*	.027	*.69*
M83528/013X033	5313-0033-XX	5.312	*134.92*	1.350	*34.29*	2.850	*72.39*	.290	*7.37*	.027	*.69*

TechSIL Molded Waveguide Gaskets come in twenty six different sizes and are available in round or rectangular shapes. They come with a .027" thickness and are available in several different lengths and widths. These Molded Waveguide Gaskets can be molded out of all twelve of the MIL-DTL-83528 compounds. Additional sizes are available upon request.

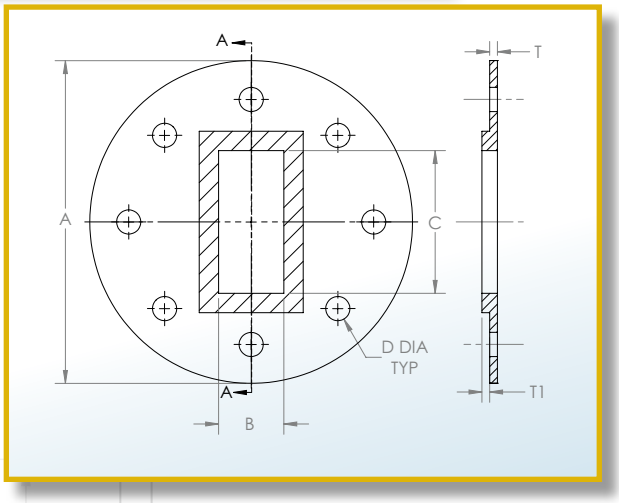

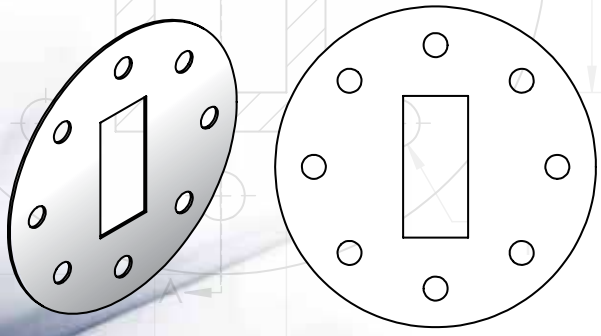

Part Numbering Example
5XXX-XXXX-MM
MM=LTE material code

Standard Tolerances for All Profiles Unless Superseded by MIL-DTL-83528

Dimensions	Tolerance
Under .070" (1.8)	+/- 0.003 (0.07)
.071"-0.100" (1.8-2.5)	+/- 0.005 (0.13)
0.101" - 0.200" (2.6 to 5.1)	+/- 0.008 (0.2)
0.201" - 0.300" (5.1 to 7.6)	+/- 0.010 (0.3)
0.301" - 0.500" (7.6 to 12.7)	+/- 0.015 (0.4)
Over 0.500" (12.7)	+/- 0.020 (0.5)

Please refer to page 31 for instruction on how to add PSA adhesive to your part number.

Die Cut

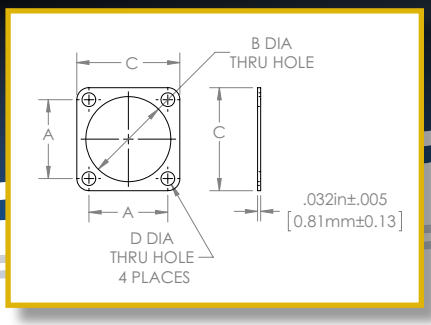

Flange Mount

MIL-DTL-83528 Part Number	Leader Tech Part Number	MIL-DTL-38999			MIL-C-81511	MS90484 (inactive 6/1999)	MIL-DTL-5015	MIL-DTL-83723	NAS 1599 (inactive 6/1980)	MIL-C-26482	Dimensions								Connector Shell size
		Series I	Series II	Series IV							A ± .010		B +.020 - .000		C ± .015		D ± .010		
M83528/004X001	5204-0001-XX							6	6	6	.469	11.91	.375	9.53	.738	18.75	.141	3.58	6
M83528/004X002	5204-0002-XX		8								.594	15.09	.630	16.00	.840	21.34	.135	3.43	8
M83528/004X003	5204-0003-XX				8	8					.594	15.09	.568	14.43	.812	20.62	.125	3.18	8
M83528/004X004	5204-0004-XX						8	8	8	8	.594	15.09	.500	12.70	.875	22.23	.156	3.96	8
M83528/004X005	5204-0005-XX	9	10								.719	18.26	.750	19.05	.965	24.51	.135	3.43	9,10
M83528/004X006	5204-0006-XX				10	10					.719	18.26	.680	17.27	.937	23.80	.125	3.18	10
M83528/004X007	5204-0007-XX						10	10	10	10	.719	18.26	.625	15.88	1.000	25.40	.156	3.96	10S,SL
M83528/004X008	5204-0008-XX	11	12	11							.812	20.62	.875	22.23	1.060	26.92	.141	3.58	11,12
M83528/004X009	5204-0009-XX						12	12	12	12	.813	20.65	.750	22.10	1.094	27.79	.141	3.58	12,12S,SL
M83528/004X010	5204-0010-XX	13	14	13							.906	23.01	1.005	25.53	1.153	29.29	.135	3.43	13,14
M83528/004X011	5204-0011-XX				14	14					.906	23.01	.938	23.83	1.125	28.58	.125	3.18	14
M83528/004X012	5204-0012-XX						14	14	14	14	.906	23.01	.875	22.23	1.188	30.18	.156	3.96	14,14S
M83528/004X013	5204-0013-XX	15	16	15							.969	24.61	1.135	28.83	1.258	31.95	.156	3.96	15,16
M83528/004X014	5204-0014-XX				16	16					.969	24.61	1.063	27.00	1.250	31.75	.125	3.18	16
M83528/004X015	5204-0015-XX						16	16	16	16	.969	24.61	1.000	25.40	1.281	32.54	.156	3.96	16,16S
M83528/004X016	5204-0016-XX	17	18	17							1.062	26.97	1.260	32.00	1.351	34.32	.156	3.96	17,18
M83528/004X017	5204-0017-XX				18	18					1.062	26.97	1.189	30.20	1.343	34.11	.125	3.18	18
M83528/004X018	5204-0018-XX						18	18	18	18	1.062	26.97	1.135	28.83	1.375	34.93	.156	3.96	18,18S
M83528/004X019	5204-0019-XX	19	20	19							1.156	29.36	1.375	34.93	1.500	38.10	.141	3.58	19,20
M83528/004X020	5204-0020-XX				20	20					1.156	29.36	1.312	33.32	1.467	37.26	.125	3.18	20
M83528/004X021	5204-0021-XX						20	20	20	20	1.156	29.36	1.250	31.75	1.500	38.10	.172	4.37	20
M83528/004X022	5204-0022-XX	21	22	21							1.250	31.75	1.500	38.10	1.625	41.28	.141	3.58	21,22
M83528/004X023	5204-0023-XX				22	22					1.250	31.75	1.437	36.50	1.562	39.67	.125	3.18	22
M83528/004X024	5204-0024-XX						22	22	22	22	1.250	31.75	1.375	34.93	1.625	41.28	.172	4.37	22
M83528/004X025	5204-0025-XX	23	24	23							1.375	34.93	1.625	41.28	1.750	44.45	.172	4.37	23,24
M83528/004X026	5204-0026-XX				24	24					1.375	34.93	1.563	39.70	1.703	43.26	.152	3.86	24
M83528/004X027	5204-0027-XX						24	24	24	24	1.375	34.93	1.500	38.10	1.750	44.45	.203	5.16	24
M83528/004X028	5204-0028-XX	25		25							1.500	38.10	1.750	44.45	1.875	47.63	.172	4.37	25
M83528/004X029	5204-0029-XX						28				1.562	39.67	1.750	44.45	2.000	50.80	.203	5.16	28
M83528/004X030	5204-0030-XX						32				1.750	44.45	2.000	50.80	2.250	57.15	.219	5.56	32
M83528/004X031	5204-0031-XX						36				1.938	49.23	2.250	57.15	2.500	63.50	.219	5.56	36
M83528/004X032	5204-0032-XX						40				2.188	55.58	2.500	63.50	2.750	69.85	.219	5.56	40
M83528/004X033	5204-0033-XX						44				2.375	60.33	2.781	70.63	3.000	76.20	.219	5.56	44
M83528/004X034	5204-0034-XX						48				2.625	66.68	3.031	76.99	3.250	82.55	.219	5.56	48
M83528/004X035	5204-0035-XX										.500	12.70	.437	11.10	.800	20.32	.135	3.43	
M83528/004X036	5204-0036-XX										.500	12.70	.437	11.10	.687	17.45	.135	3.43	

TechSIL Die-Cut Flange Mount Connector Gaskets are square and come in thirty six different sizes. They range from .687" to 3.250" and are available with a .032" thickness. These Die-Cut Flange Mount Connector Gaskets can be Die-Cut out of all sixteen standard compounds. Additional sizes and compounds available upon request.

Please refer to page 31 for instruction on how to add PSA adhesive to your part number.

Flat Circular Washer

MIL-DTL-83528 Part Number	Leader Tech Part Number	Nominal Dimensions					
		A		B		T	
M83528/012X001	5212-0001-XX	.250	6.35	.625	15.86	.031	.79
M83528/012X002	5212-0002-XX	.250	6.35	.625	15.86	.062	1.57
M83528/012X003	5212-0003-XX	.375	9.53	.750	19.05	.031	.79
M83528/012X004	5212-0004-XX	.375	9.53	.750	19.05	.062	1.57
M83528/012X005	5212-0005-XX	.500	12.70	.656	16.66	.031	.79
M83528/012X006	5212-0006-XX	.500	12.70	.656	16.66	.062	1.57
M83528/012X007	5212-0007-XX	.500	12.70	.875	22.23	.031	.79
M83528/012X008	5212-0008-XX	.500	12.70	.875	22.23	.062	1.57
M83528/012X009	5212-0009-XX	.750	19.50	1.000	25.40	.031	.79
M83528/012X010	5212-0010-XX	.750	19.50	1.000	25.40	.062	1.57
M83528/012X011	5212-0011-XX	1.000	25.40	1.438	36.53	.031	.79
M83528/012X012	5212-0012-XX	1.000	25.40	1.438	36.53	.062	1.57

TechSIL Flat Circular Washers come in twelve different sizes and two different thicknesses (.031" and .062"). The Inside Diameters range from .250" to 1.000" with Outside Diameters ranging from .625" to 1.438". These Die-Cut Flat Circular Washers can be Die-Cut out of all sixteen standard compounds. Additional sizes and compounds available upon request.

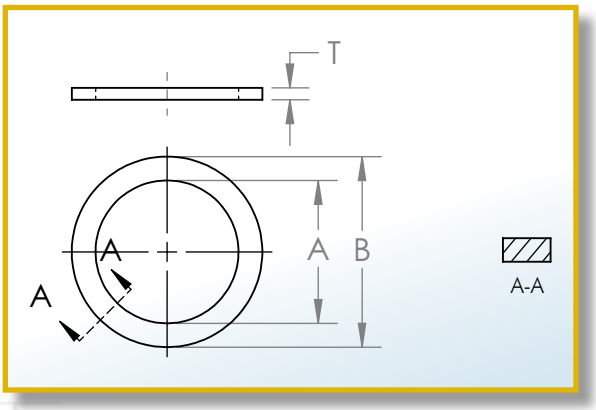

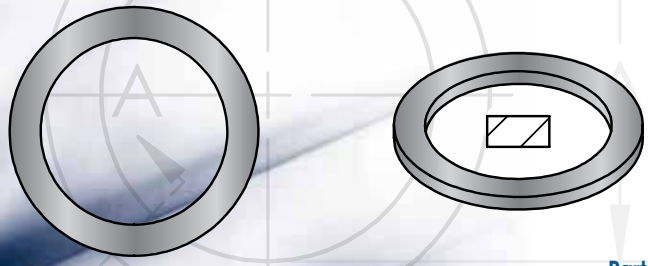

Standard Tolerances for Flat Circular Washer Unless Superseded by MIL-DTL-83528

Dimensions	Tolerance
Under .101" (2.57)	+/- 0.005 (0.13)
0.101" - 0.200" (2.57 to 5.08)	+/- 0.010 (0.25)
0.201" - 0.500" (5.11 to 12.70)	+/- 0.015 (0.38)
Over 0.500" (12.70)	+/- 0.020 (0.51)

Part Numbering Example
5XXX-XXXX-MM
MM=LTE material code

Please refer to page 31 for instruction on how to add PSA adhesive to your part number.

Specials

MIL-DTL-83528 Part Number	Leader Tech Part Number
M83528/014X001	5214-0001-XX
M83528/014X002	5214-0002-XX

5214-0001-XX

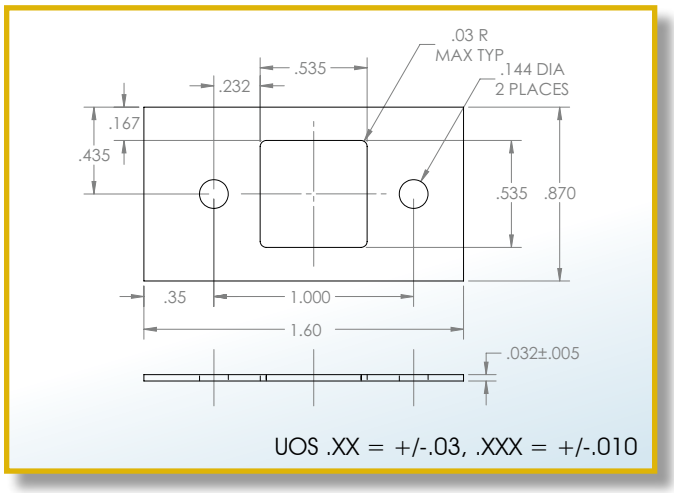

5214-0002-XX

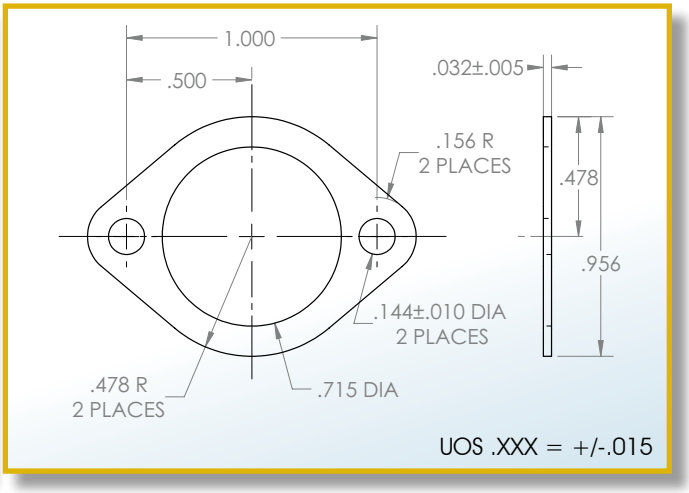

TechSIL MIL-DTL-83528/014X gaskets come in a .032" thickness. These are specialty gaskets that can be Die-Cut out of all sixteen standard compounds. Additional sizes and compounds available upon request.

Part Numbering Example
5XXX-XXXX-MM
MM=LTE material code

Please refer to page 31 for instruction on how to add PSA adhesive to your part number.

CUSTOM AND DIE-CUT SHIELDING GASKETS

In addition to our large assortment of stock products, Leader Tech offers customers the ability to create custom and die-cut shielding gaskets using any of our conductive elastomer formulations or fabric shielding gasket materials. Our extensive manufacturing capabilities include extrusion, molding and precision die-cut shapes and sizes.

All of our high-performance custom shielding gaskets can be made from your choice of twelve MIL-DTL-83528 Conductive Elastomer compounds or from our Fabric Shielding Gasket material. Depending on your unique application requirements, our engineering team will work to develop a custom gasketing solution that exhibits superior shielding properties and ensures a long performance life in a cost effective manner. Please review your application with our Material Specialist and Engineering Group to determine the best materials to use for your application.

Die Cut Gasket Design Recommendations and Tolerances

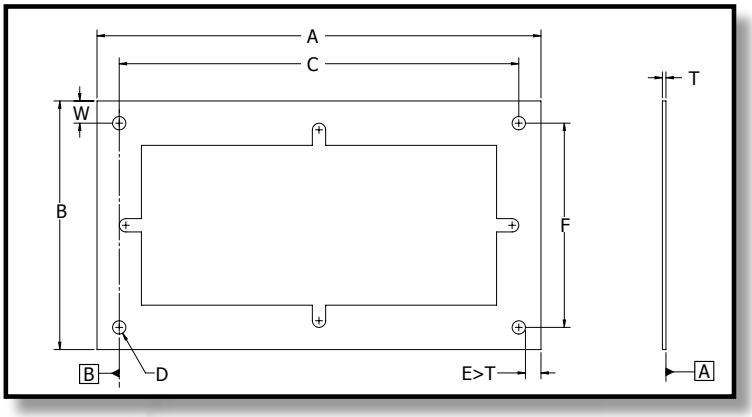

NOTES:

1. **Minimum recommended flange width (W) is .125".**
2. **Hole diameter (D) must exceed material thickness (T).**
3. **Distance edge of hole to edge of gasket (E) mustexceed material thickness (T). If not possible, then a slot is required.**
4. **Recommend assign datum to hole C/L and not to edge of gasket.**

Tolerance Range

Feature Type	Sample Dim.	0 - 4"	4.1 - 12"	12.1 - 24"
Length/Width	A, B, W	+/- .020	+/- .030	+/- .040
Hole Location	C, F	+/- .010	+/- .015	+/- .020
Hole Diameter	D	+/- .020	+/- .030	+/- .040

PSA Non-Conductive Tape Location

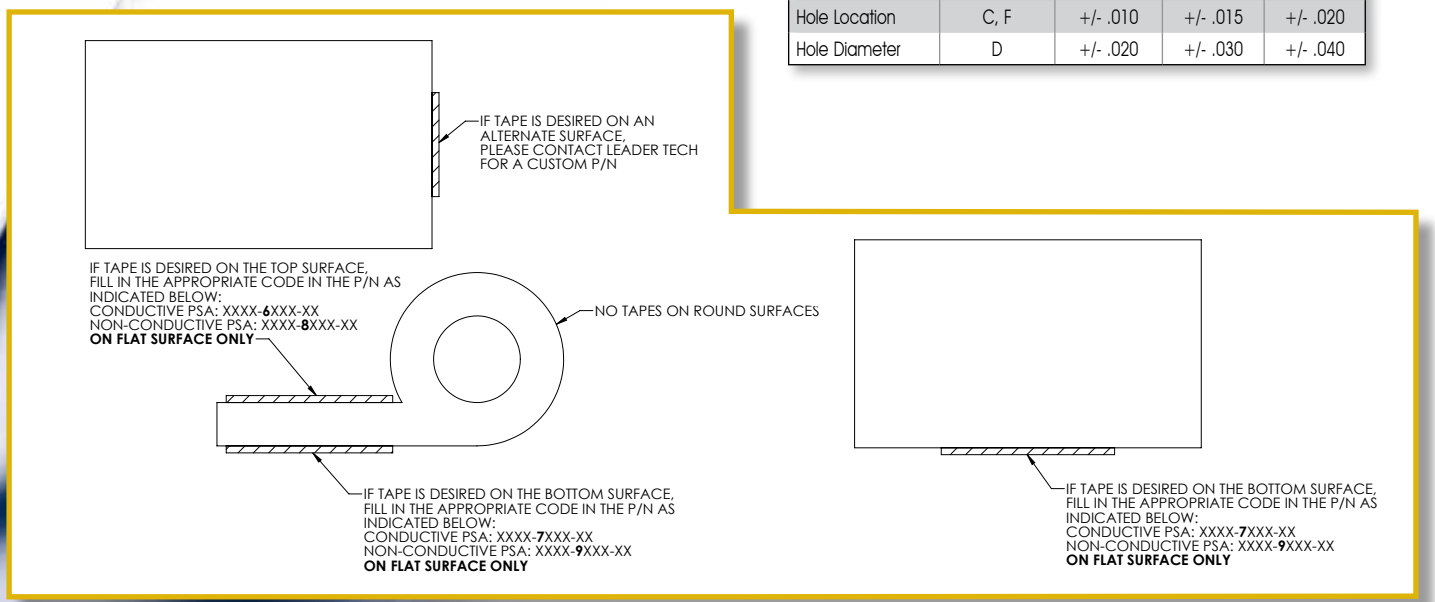

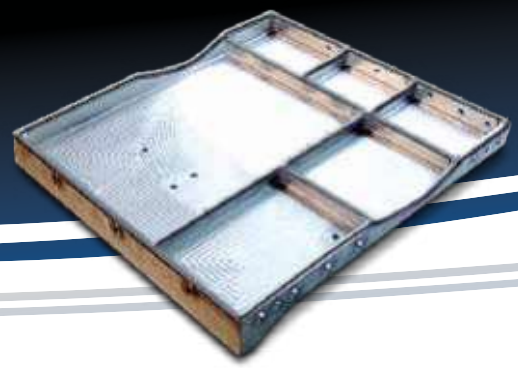

LTE FIP-65 - Form-In-Place *Conductive Silicone Rubber*

Characteristics:

- A two-component thermal cure silicone filled with conductive Ag/Ni particles
- It is used to produce integrated EMI shielding gaskets by dispensing and forming directly on telecom or other industrial components
- Low viscosity offers short cycle times in any dispensing machine
- Excellent shielding combined with good mechanical properties
- Low compression forces
- Operating temperatures between -55°C and +125°C
- Good adhesion to most metal and metalized surfaces
- Typical gasket height from 0,8 to 2,0 mm width to height ratio is <1
- Recommended compression between 10 and 50%

Applications:

- Leader Tech LTE FIP-65 is particularly suitable for low cost production of gaskets on large series of metallic housings as plated aluminium castings when there is a demand of excellent shielding
- Typical applications include EMI shielding gaskets in mobile phone base stations

Processing:

Leader Tech LTE FIP-65 is a two-component compound of pasty consistency. The mixed material is dispensed as a bead directly on the component with a standard dispensing machine. Curing is done in a hot air oven at 100°C for 30 minutes

Product Data:

Finish Type	Test Procedure	Unit	LTE FIP-65
Base Material			Silicone Rubber
Conductive Filler			Ag/Ni
Density, Uncured		g/cm³	2.6
Viscosity A Comp. at Shear Rate 10^{s-1}	FOU-04/5	Pa	90
Viscosity B Comp. at Shear Rate 10^{s-1}	FOU-04/5	Pa	45
Viscosity Mixed at Shear Rate 10^{s-1}	FOU-04/5	Pa	75
Electrical Resistance	FOU-04/6	mOhm	20
Adhesion	FOU-04/7		Cohesive Failure

Mechanical Properties:

	Test Procedure	Unit	LTE FIP-65
Density, Cured	ISO 2781	g/cm³	3,1
Hardness	ISO 7619	Shore A	55
Tensile Strength	ISO 37	MPa	2.9[1]
Elongation at Break	ISO 37	%	240
Tear Strength	ISO 34-1C	N/mm	14[2]
Compression Set, 72 hours/100°C	ISO 815	%	25
Compression Modulus, 10% Strain 20% Strain	ISO 7743	MPa	3,8 6,5
Flammability	UL 94		V0[3]

[1] 1 MPa = 145 psi
[2] 1 N/mm = 5,71 lb/in
[3] Tested on a 0,8 mm thick gasket adhered to an aluminium substrate with a thickness of 2 mm.

Material Characteristics

Two-component compound

Low viscosity

Excellent shielding

Unmatched mechanical properties

Low compression forces

Applications

Integrated EMI shielding gasket

Low cost metallic housing gasket

Low cost plated aluminium casting gasket

Mobile phone base stations

LTE FIP-65 - FORM-IN-PLACE CONDUCTIVE SILICONE RUBBER continued

Electrical and Shielding Properties:

	Test Procedure	Unit	LTE FIP-65
Volume Resistivity, as Moulded	MIL-DTL-83528C	mOhm-cm	15
Volume Resistivity, Heat Aged 48h/156°C	MIL-DTL-83528C	mOhm-cm	17
Volume Resistivity, Heat Aged 1000h/125°C	MIL-DTL-83528C	mOhm-cm	80
Average Shielding Effect, 0,3 - 9 GHz Gasket on Ni/Sn Plated Aluminium, Fresh	MIL STD 285 Modified	dB	170
Average Shielding Effect, 0,3 - 9 GHz Gasket on Ni/Sn Plated Aluminium, Heat Aged 72h/80°C	MIL STD 285 Modified	dB	91
Average Shielding Effect, 0,3 - 9 GHz Gasket on Ni/Sn Plated Aluminium, Damp Heat Aged 72h/70°C/97%RH	MIL STD 285 Modified	dB	86

RoHS Information:

Leader Tech LTE FIP-65 fulfills the requirements set by the RoHs 2 directive (2011/65/EU).

Safety Instructions:

Leader Tech LTE FIP-65 is not considered as hazardous according to EU Directive 1999/45/EC and is not subject to the directive of classification, packaging and labelling of dangerous goods. A material safety data sheet can be sent on request.

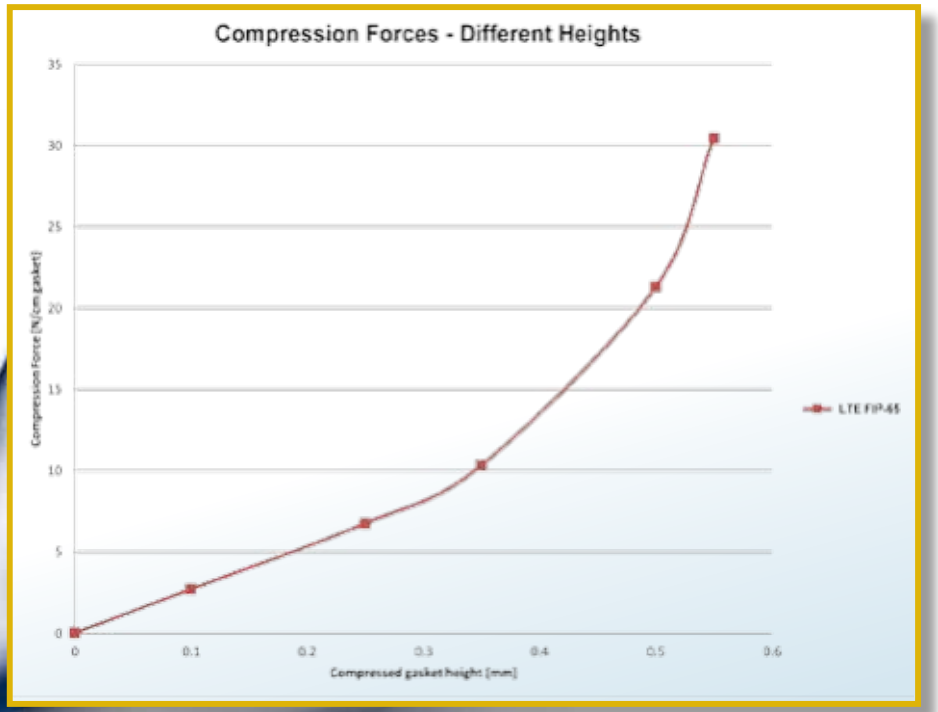

Leader Tech is committed like no other manufacturer!

We are the World's Only MIL-SPEC Approved & Certified Manufacturer Of 12 Conductive Elastomer Compounds!

From our Global EMI Shielding Technology Center located in Tampa, Florida, Leader Tech partners with many of the world's most respected commercial, consumer and military electronics manufacturers. Our unique consultative business approach allows us to become an integral part of your application support team and develop precision engineered EMI shielding solutions.

Leader Tech's TechSIL Conductive Elastomer materials are ideal for applications requiring both excellent EMI shielding and environmental sealing across a wide temperature range. Conductive Elastomers are frequently found in military and aerospace applications but can also be applied economically to meet commercial design requirements. Our proprietary TechSIL compounds are formulated by combining both silicone and fluorosilicone based rubber with various forms of conductive fillers including: silver plated copper, silver plated aluminum, silver plated glass and nickel coated graphite. All formulations are compounded to be compatible with common fluid media and resist compression set resulting in years of continuous service.

Global EMI Shielding Technology Center

- **Quality and cost effective shielding products**
- **Expert engineering and application support teams**
- **Rapid production and delivery options**
- **Extremely responsive customer service**
- **Modern, advanced manufacturing capabilities**

Core Markets

- Military
- Aerospace
- Medical
- Commercial
- Integrated Communications

Elastomer Expertise

- Material Compounding
- Custom Material Design
- Molding
- Extruding
- Bonding
- Die Cutting
- Form-In-Place

For more detailed information and technical data on any of the product lines shown call our Sales Engineering Team or visit www.leadertechinc.com!

866-TECH-EMI

We've Got You Covered

Reliable Board, Enclosure and Cable Shielding Solutions

Leader Tech is a world-leading innovator and US-based manufacturer of EMI shielding products for circuit boards, enclosures and cables. In addition to our best selling standard, modified standard and custom CBS shields, Leader Tech offers an expansive line of beryllium copper fingerstock gaskets, conductive elastomers, advanced RF absorber materials and EMI/RFI ferrites.

FSG Fabric Shielding Catalog | EMI Enclosure Solutions Catalog | Circuit Board Shielding Catalog | FerriShield Ferrites Catalog

LeaderTech Shielding Products

Board Level Shielding

- Standard and Multi-Cavity CBS
- Modified Standard Options
- Custom Circuit Board Shields

FerriShield Ferrites

- Snap-On Bisected & Solid Bead Ferrites
- Round & Flat Styles for Cables, Wires and Flex Circuits
- Low, High, Microwave and Wideband Frequency-Specific Material

Enclosure Shielding

- BeCu Fingerstock Gaskets
- TechSIL 5000 Conductive Elastomers
- Conductive Fabric Shielding Gaskets
- TechSIL 8000 Oriented Wire Gaskets
- TechMESH Knitted Wire Gaskets
- TechMESH Combo Strip & Gaskets
- TechVENT Honeycomb Shielding Panels

EMI Problem?

Our sales engineers are waiting for your call: 866-TECH-EMI (866-832-4364)

Visit our web site today to browse our complete product line, download literature and find your local sales engineer or sales representative! www.leadertechinc.com

STATEMENT OF LIEU OF WARRANTY: All technical information and data in this document is based on tests and is believed to be accurate and reliable. Nevertheless, since the products described herein are not provided to conform with mutually accepted specifications and the use thereof is unknown, the manufacturer and seller of the products do not guarantee results, freedom from patent infringement, or suitability of the products for any application thereof. The manufacturer and seller of the products described in this document will provide all possible technical assistance and will replace any products proven defective. No statement or recommendations made by the manufacturer or seller not contained herein shall have any force of effect unless in conformity with an agreement signed by an officer of the seller and manufacturer. Product testing by the purchaser is recommended in order to confirm expected results.

copyright© Leader Tech, Inc. 2012

LEADER TECH
a HEICO company

12420 Race Track Rd., Tampa, Florida 33626
866.TECH.EMI (866.832.4364)
t 813.855.6921 f 813.855.3291

ISO 9001: 2008 RoHS

1114-2.5k