LF147 - LF247
LF347

WIDE BANDWIDTH
QUAD J-FET OPERATIONAL AMPLIFIERS

- LOW POWER CONSUMPTION
- WIDE COMMON-MODE (UP TO V_{CC}^+) AND DIFFERENTIAL VOLTAGE RANGE
- LOW INPUT BIAS AND OFFSET CURRENT
- OUTPUT SHORT-CIRCUIT PROTECTION
- HIGH INPUT IMPEDANCE J–FET INPUT STAGE
- INTERNAL FREQUENCY COMPENSATION
- LATCH UP FREE OPERATION
- HIGH SLEW RATE : 16V/µs (typ)

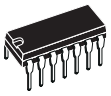

N
DIP14
(Plastic Package)

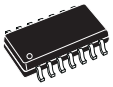

D
SO14
(Plastic Micropackage)

DESCRIPTION

These circuits are high speed J–FET input quad operational amplifiers incorporating well matched, high voltage J–FET and bipolar transistors in a monolithic integrated circuit.

The devices feature high slew rates, low input bias and offset currents, and low offset voltage temperature coefficient.

ORDER CODE

Part Number	Temperature Range	Package	
		N	D
LF147	-55°C, +125°C	•	•
LF247	-40°C, +105°C	•	•
LF347	0°C, +70°C	•	•
Example : LF347IN			

N = Dual in Line Package (DIP)
D = Small Outline Package (SO) - also available in Tape & Reel (DT)

PIN CONNECTIONS (top view)

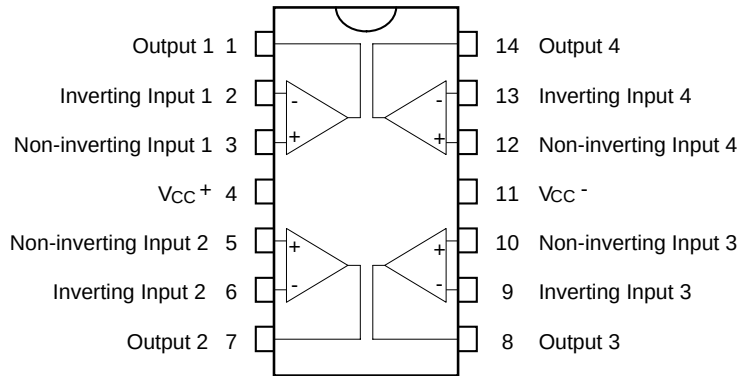

SCHEMATIC DIAGRAM (each amplifier)

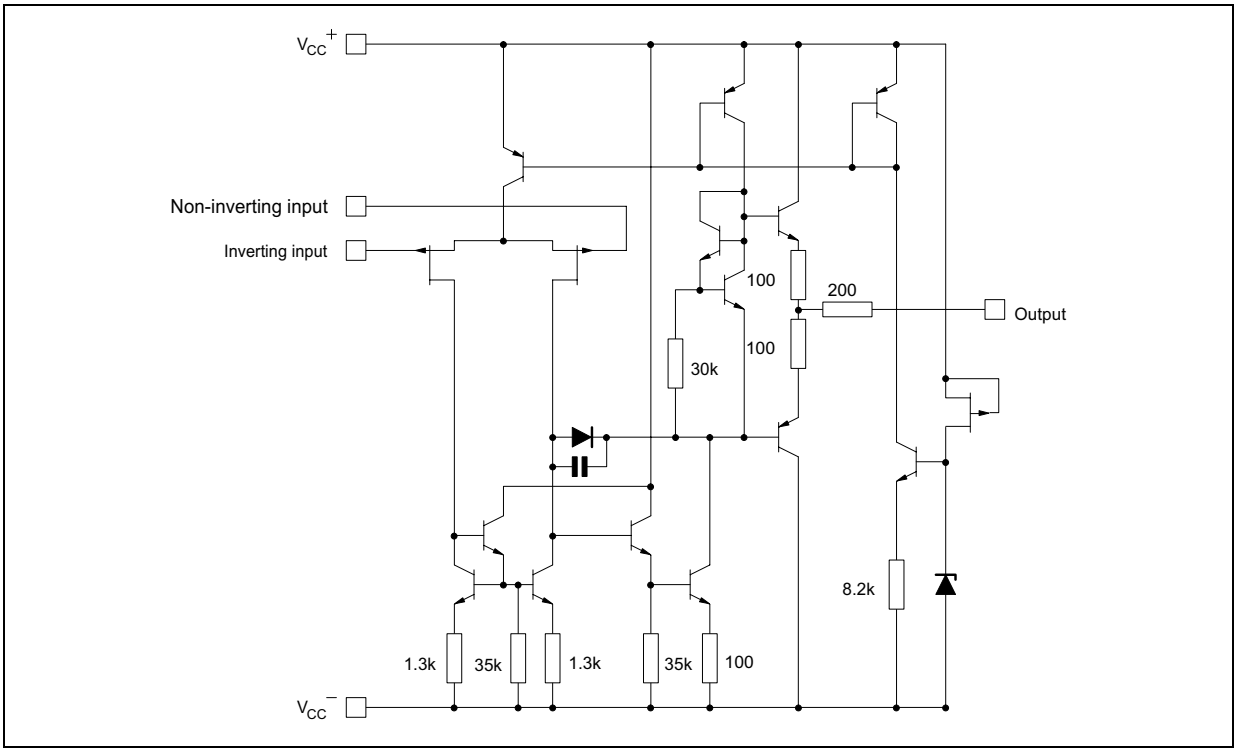

ABSOLUTE MAXIMUM RATINGS

Symbol	Parameter	LF147	LF247	LF347	Unit
V_{CC}	Supply voltage - note 1)	±18			V
V_i	Input Voltage - note 2)	±15			V
V_{id}	Differential Input Voltage - note 3)	±30			V
P_{tot}	Power Dissipation	680			mW
	Output Short-circuit Duration - note 4)	Infinite			
T_{oper}	Operating Free-air Temperature Range	-55 to +125	-40 to +105	0 to +70	°C
T_{stg}	Storage Temperature Range	-65 to +150			°C

1. All voltage values, except differential voltage, are with respect to the zero reference level (ground) of the supply voltages where the zero reference level is the midpoint between V_{CC}^+ and V_{CC}^-.
2. The magnitude of the input voltage must never exceed the magnitude of the supply voltage or 15 volts, whichever is less.
3. Differential voltages are the non-inverting input terminal with respect to the inverting input terminal.
4. The output may be shorted to ground or to either supply. Temperature and/or supply voltages must be limited to ensure that the dissipation rating is not exceeded

ELECTRICAL CHARACTERISTICS

V_{CC} = ±15V, T_{amb} = +25°C (unless otherwise specified)

Symbol	Parameter	Min.	Typ.	Max.	Unit
V_{io}	Input Offset Voltage (R_S = 10kΩ) T_{amb} = 25°C $T_{min} \le T_{amb} \le T_{max}$		3	10 13	mV
DV_{io}	Input Offset Voltage Drift		10		µV/°C
I_{io}	Input Offset Current - note 1) T_{amb} = 25°C $T_{min} \le T_{amb} \le T_{max}$		5	100 4	pA nA
I_{ib}	Input Bias Current - note 1 T_{amb} = 25°C $T_{min} \le T_{amb} \le T_{max}$		20	200 20	pA nA
A_{vd}	Large Signal Voltage Gain (R_L = 2kΩ, V_o = ±10V) , T_{amb} = 25°C $T_{min} \le T_{amb} \le T_{max}$	50 25	200		V/mV
SVR	Supply Voltage Rejection Ratio (R_S = 10kΩ) T_{amb} = 25°C $T_{min} \le T_{amb} \le T_{max}$	80 80	86		dB
I_{CC}	Supply Current, Per Amp, no Load T_{amb} = 25°C $T_{min} \le T_{amb} \le T_{max}$		1.4	2.7 2.7	mA
V_{icm}	Input Common Mode Voltage Range	±11	+15 -12		V
CMR	Common Mode Rejection Ratio (R_S = 10kΩ) T_{amb} = 25°C $T_{min} \le T_{amb} \le T_{max}$	70 70	86		dB
I_{OS}	Output Short-Circuit Current T_{amb} = 25°C $T_{min} \le T_{amb} \le T_{max}$	10 10	40	60 60	mA
$\pm V_{opp}$	Output Voltage Swing T_{amb} = 25°C R_L = 2kΩ R_L = 10kΩ $T_{min} \le T_{amb} \le T_{max}$ R_L = 2kΩ R_L = 10kΩ	10 12 10 12	12 13.5		V
SR	Slew Rate V_i = 10V, R_L = 2kΩ, C_L = 100pF, T_{amb} = 25°C, unity gain	12	16		V/µs
t_r	Rise Time V_i = 20mV, R_L = 2kΩ,C_L = 100pF, T_{amb} = 25°C, unity gain		0.1		µs
K_{ov}	Overshoot V_i = 20mV, R_L = 2kΩ, C_L = 100pF, T_{amb} = 25°C, unity gain		10		%
GBP	Gain Bandwidth Product f =100kHz, T_{amb} = 25°C, V_{in} = 10mV, R_L =2kΩ, C_L = 100pF	2.5	4		MHz
R_i	Input Resistance		10^{12}		Ω
THD	Total Harmonic Distortion f =1kHz, A_v = 20dB, R_L = 2kΩ, C_L = 100pF T_{amb} = 25°C, V_O = 2Vpp		0.01		%
e_n	Equivalent Input Noise Voltage (R_S = 100Ω, f = 1KHz)		15		$\frac{nV}{\sqrt{Hz}}$
∅m	Phase Margin		45		Degrees
V_{o1}/V_{o2}	Channel Separation (A_v = 100)		120		dB

1. The input bias currents are junction leakage currents which approximately double for every 10°C increase in the junction temperature.

MAXIMUM PEAK-TO-PEAK OUTPUT VOLTAGE versus FREQUENCY

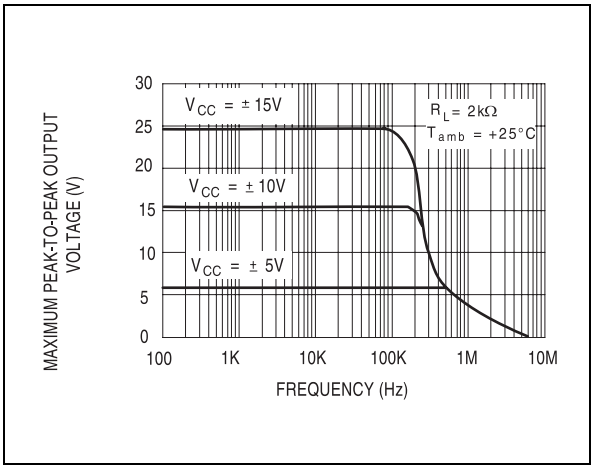

MAXIMUM PEAK-TO-PEAK OUTPUT VOLTAGE versus FREQUENCY

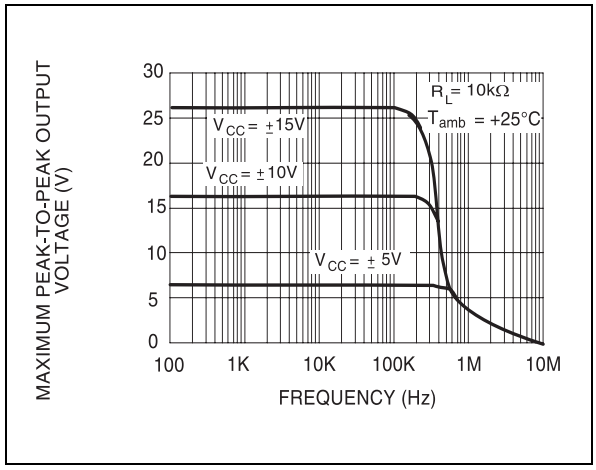

MAXIMUM PEAK-TO-PEAK OUTPUT VOLTAGE versus FREQUENCY

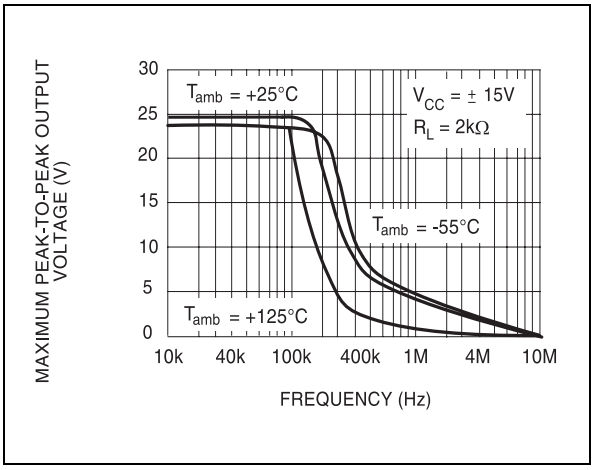

MAXIMUM PEAK-TO-PEAK OUTPUT VOLTAGE versus FREE AIR TEMP.

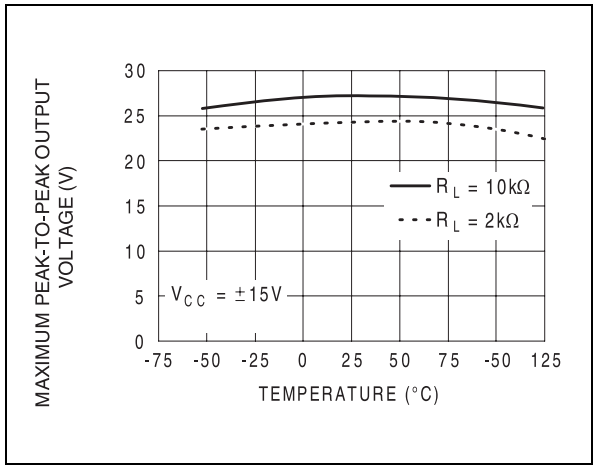

MAXIMUM PEAK-TO-PEAK OUTPUT VOLTAGE versus LOAD RESISTANCE

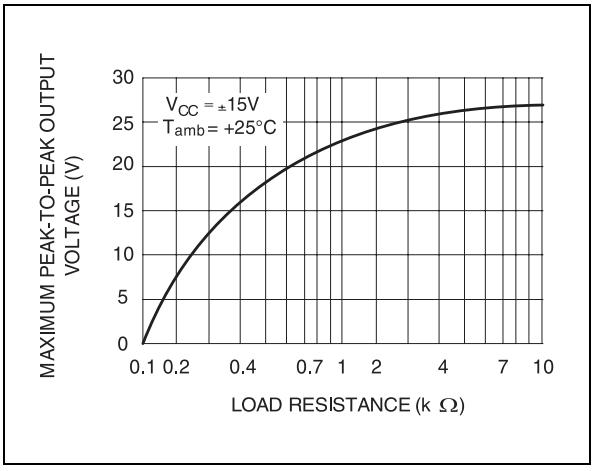

MAXIMUM PEAK-TO-PEAK OUTPUT VOLTAGE versus SUPPLY VOLTAGE

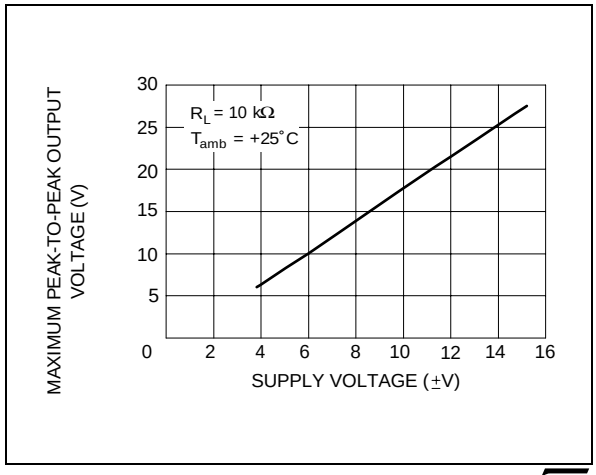

INPUT BIAS CURRENT versus FREE AIR TEMPERATURE

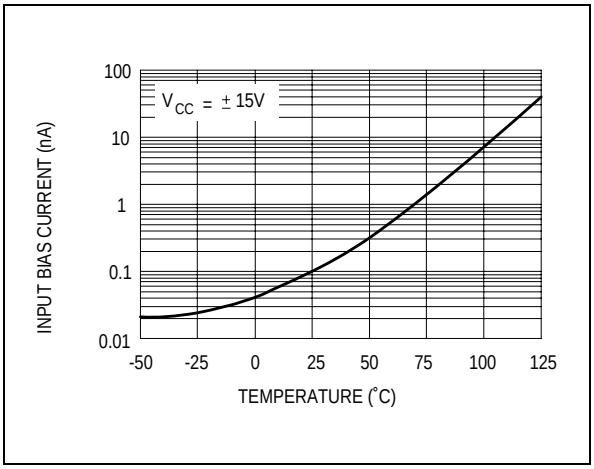

LARGE SIGNAL DIFFERENTIAL VOLTAGE AMPLIFICATION AND PHASE SHIFT versus FREQUENCY

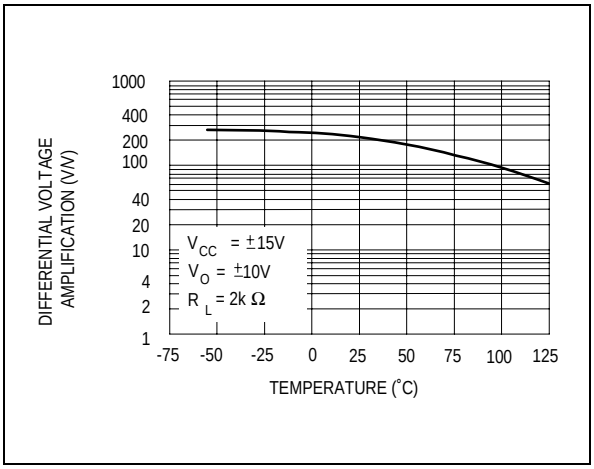

LARGE SIGNAL DIFFERENTIAL VOLTAGE AMPLIFICATION AND PHASE SHIFT versus FREQUENCY

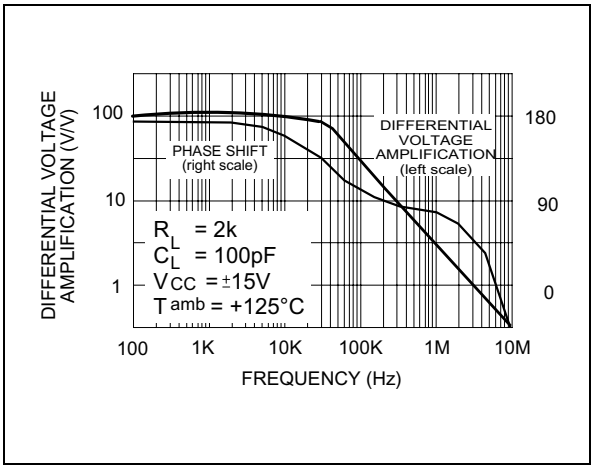

TOTAL POWER DISSIPATION versus FREE AIR TEMPERATURE

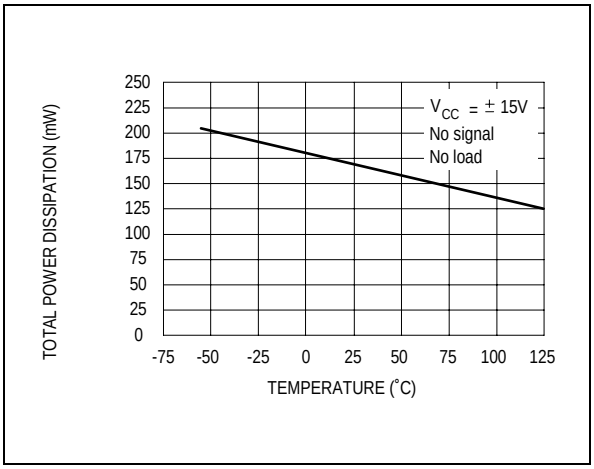

SUPPLY CURRENT PER AMPLIFIER versus FREE AIR TEMPERATURE

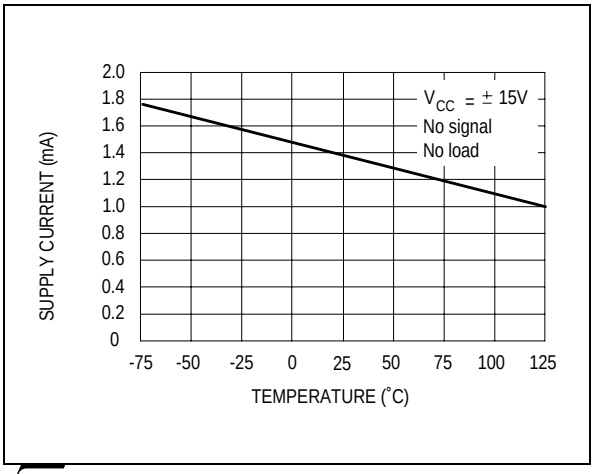

COMMON MODE REJECTION RATIO versus FREE AIR TEMPERATURE

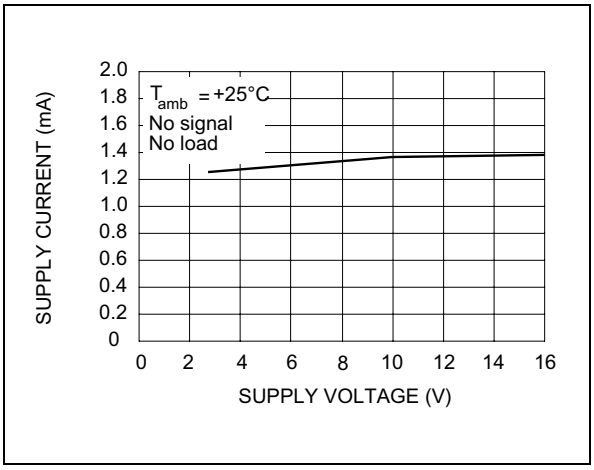

COMMON MODE REJECTION RATIO versus FREE AIR TEMPERATURE

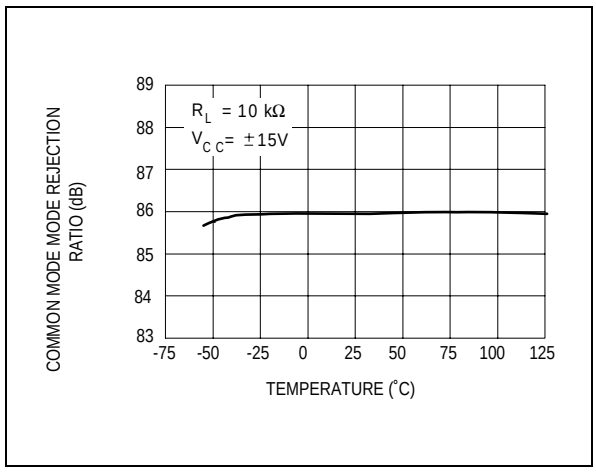

VOLTAGE FOLLOWER LARGE SIGNAL PULSE RESPONSE

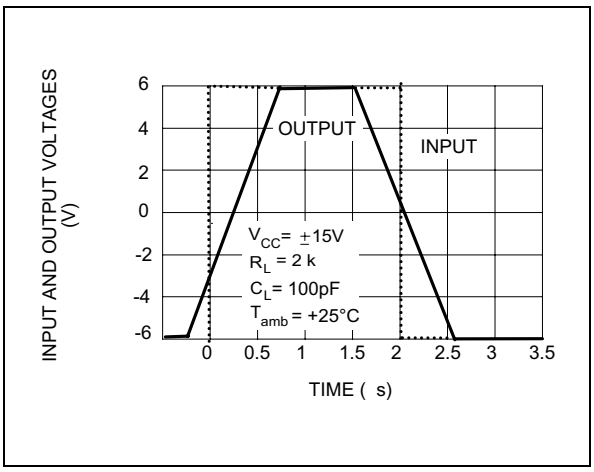

OUTPUT VOLTAGE versus ELAPSED TIME

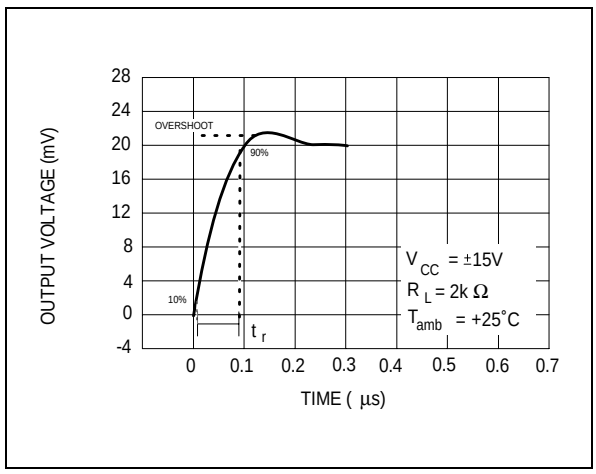

EQUIVALENT INPUT NOISE VOLTAGE versus FREQUENCY

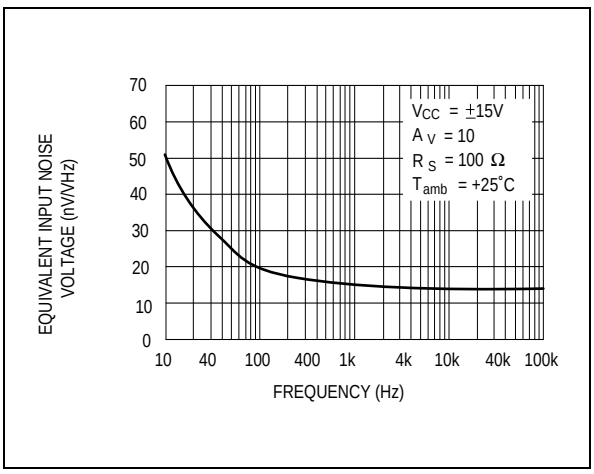

TOTAL HARMONIC DISTORTION versus FREQUENCY

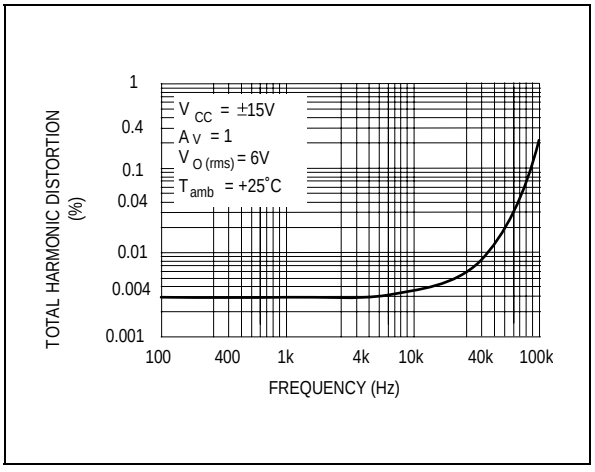

PARAMETER MEASUREMENT INFORMATION

Figure 1 : Voltage Follower

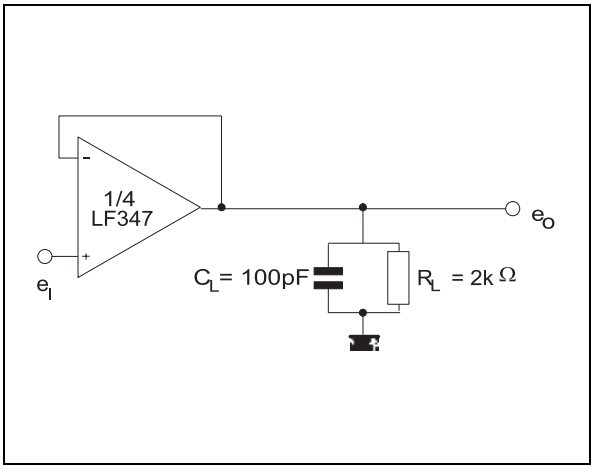

Figure 2 : Gain-of-10 Inverting Amplifier

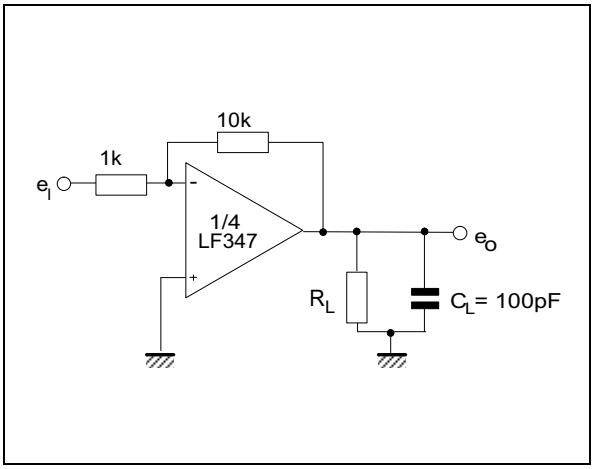

TYPICAL APPLICATIONS

AUDIO DISTRIBUTOR AMPLIFIER

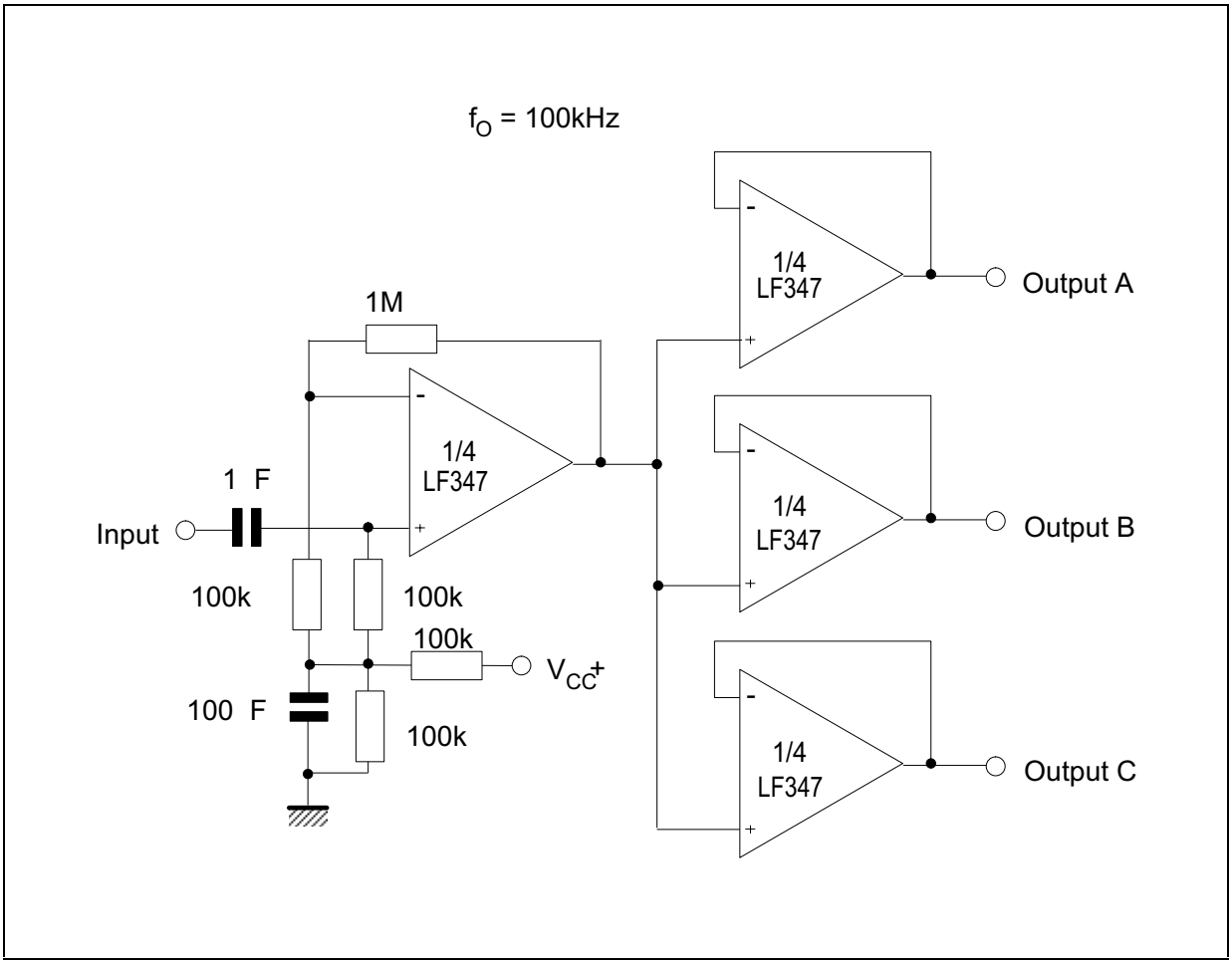

TYPICAL APPLICATIONS (continued)

POSITIVE FEEDBACK BANDPASS FILTER

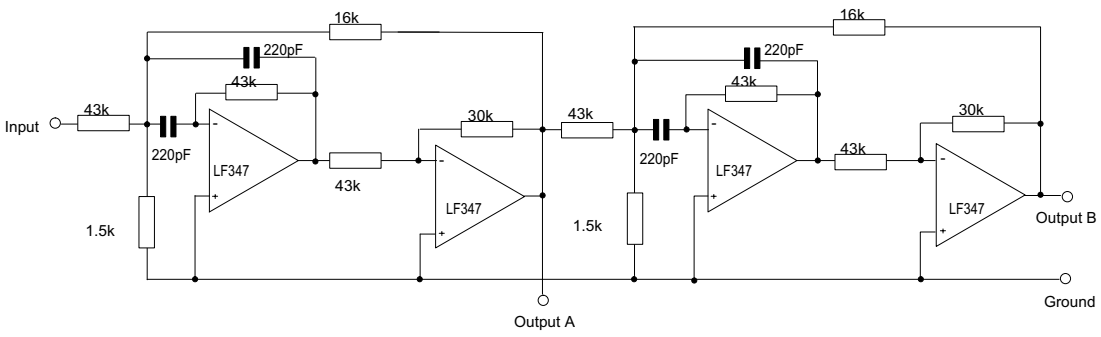

OUTPUT A

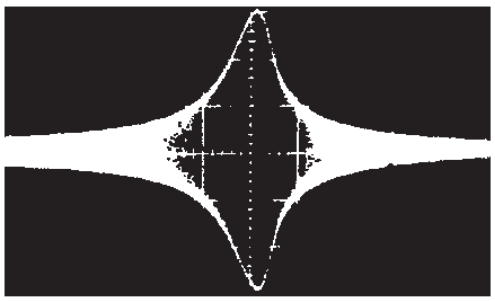

SECOND ORDER BANDPASS FILTER
fo = 100kHz; Q = 30; Gain = 16

OUTPUT B

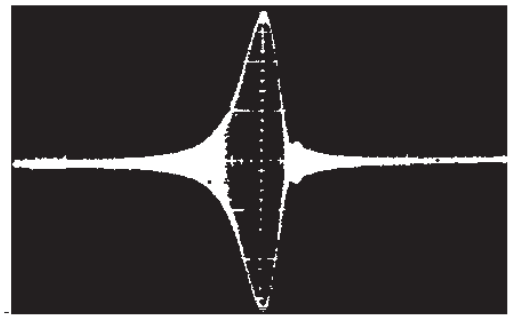

CASCADED BANDPASS FILTER
fo = 100kHz; Q = 69; Gain = 16

PACKAGE MECHANICAL DATA

14 PINS - PLASTIC DIP

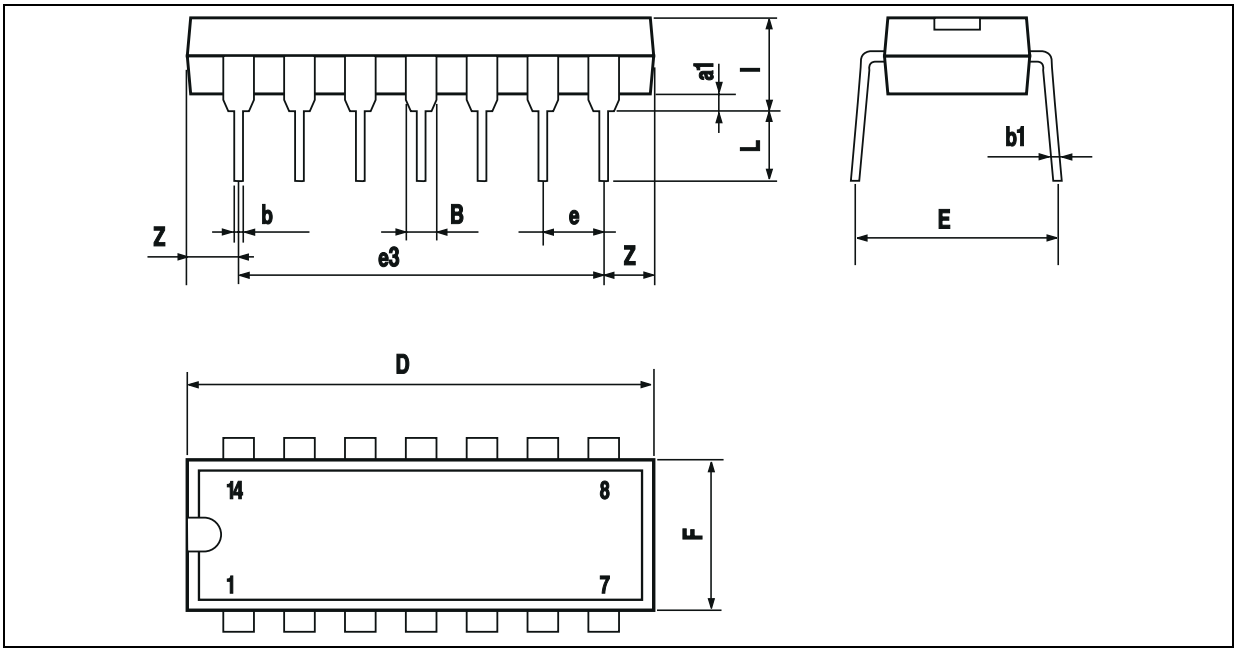

Dim.	Millimeters			Inches		
	Min.	Typ.	Max.	Min.	Typ.	Max.
a1	0.51			0.020		
B	1.39		1.65	0.055		0.065
b		0.5			0.020	
b1		0.25			0.010	
D			20			0.787
E		8.5			0.335	
e		2.54			0.100	
e3		15.24			0.600	
F			7.1			0.280
i			5.1			0.201
L		3.3			0.130	
Z	1.27		2.54	0.050		0.100

PACKAGE MECHANICAL DATA

14 PINS - PLASTIC MICROPACKAGE (SO)

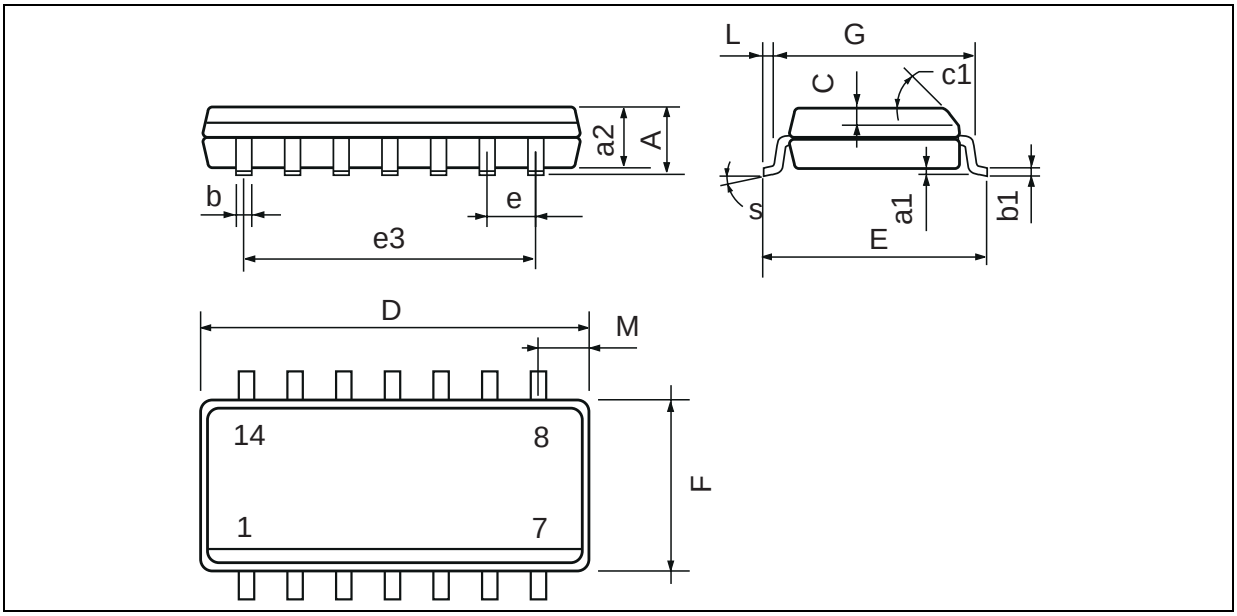

Dim.	Millimeters			Inches		
	Min.	Typ.	Max.	Min.	Typ.	Max.
A			1.75			0.069
a1	0.1		0.2	0.004		0.008
a2			1.6			0.063
b	0.35		0.46	0.014		0.018
b1	0.19		0.25	0.007		0.010
C		0.5			0.020	
c1	45° (typ.)					
D (1)	8.55		8.75	0.336		0.344
E	5.8		6.2	0.228		0.244
e		1.27			0.050	
e3		7.62			0.300	
F (1)	3.8		4.0	0.150		0.157
G	4.6		5.3	0.181		0.208
L	0.5		1.27	0.020		0.050
M			0.68			0.027
S	8° (max.)					

Note : (1) D and F do not include mold flash or protrusions - Mold flash or protrusions shall not exceed 0.15mm (.066 inc) ONLY FOR DATA BOOK.

Information furnished is believed to be accurate and reliable. However, STMicroelectronics assumes no responsibility for the consequences of use of such information nor for any infringement of patents or other rights of third parties which may result from its use. No license is granted by implication or otherwise under any patent or patent rights of STMicroelectronics. Specifications mentioned in this publication are subject to change without notice. This publication supersedes and replaces all information previously supplied. STMicroelectronics products are not authorized for use as critical components in life support devices or systems without express written approval of STMicroelectronics.
© The ST logo is a registered trademark of STMicroelectronics

© 2001 STMicroelectronics - Printed in Italy - All Rights Reserved
STMicroelectronics GROUP OF COMPANIES
Australia - Brazil - China - Finland - France - Germany - Hong Kong - India - Italy - Japan - Malaysia - Malta - Morocco
Singapore - Spain - Sweden - Switzerland - United Kingdom
© http://www.st.com