LM139, LM239, LM339

Low-power quad voltage comparators

Datasheet - production data

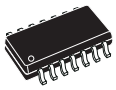

D
SO14
(plastic micropackage)



P
TSSOP14
(thin shrink small outline package)



Q
QFN16 3x3
(plastic micropackage)

Features

- Wide single supply voltage range or dual supplies for all devices: +2 to +36 V or ±1 V to ±18 V
- Very low supply current (1.1 mA) independent of supply voltage
- Low input bias current: 25 nA typ
- Low input offset current: ±5 nA typ
- Low input offset voltage: ±1 mV typ
- Input common-mode voltage range includes ground
- Low output saturation voltage: 250 mV typ; (I_{SINK} = 4 mA)
- Differential input voltage range equal to the supply voltage
- TTL, DTL, ECL, MOS, CMOS compatible outputs

Description

This family of devices consists of four independent precision-voltage comparators with an offset voltage specification as low as 2 mV maximum for LM339A, LM239A, and LM139A. Each comparator has been designed specifically to operate from a single power supply over a wide range of voltages. Operation from split power supplies is also possible.

These comparators also have a unique characteristic in that the input common mode voltage range includes ground even though operated from a single power supply voltage.

This is information on a product in full production. www.st.com

Contents

1 Pin and schematic diagram 3

2 Absolute maximum ratings and operating conditions 4

3 Electrical characteristics 6

4 Electrical characteristics curves 8

5 Typical applications 9

6 Package information 12

6.1 SO14 package information 13

6.2 TSSOP14 package information 14

6.3 QFN16 3x3 package information 15

7 Ordering information 17

8 Revision history 18

1 Pin and schematic diagram

Figure 1. Pin connections (top view)

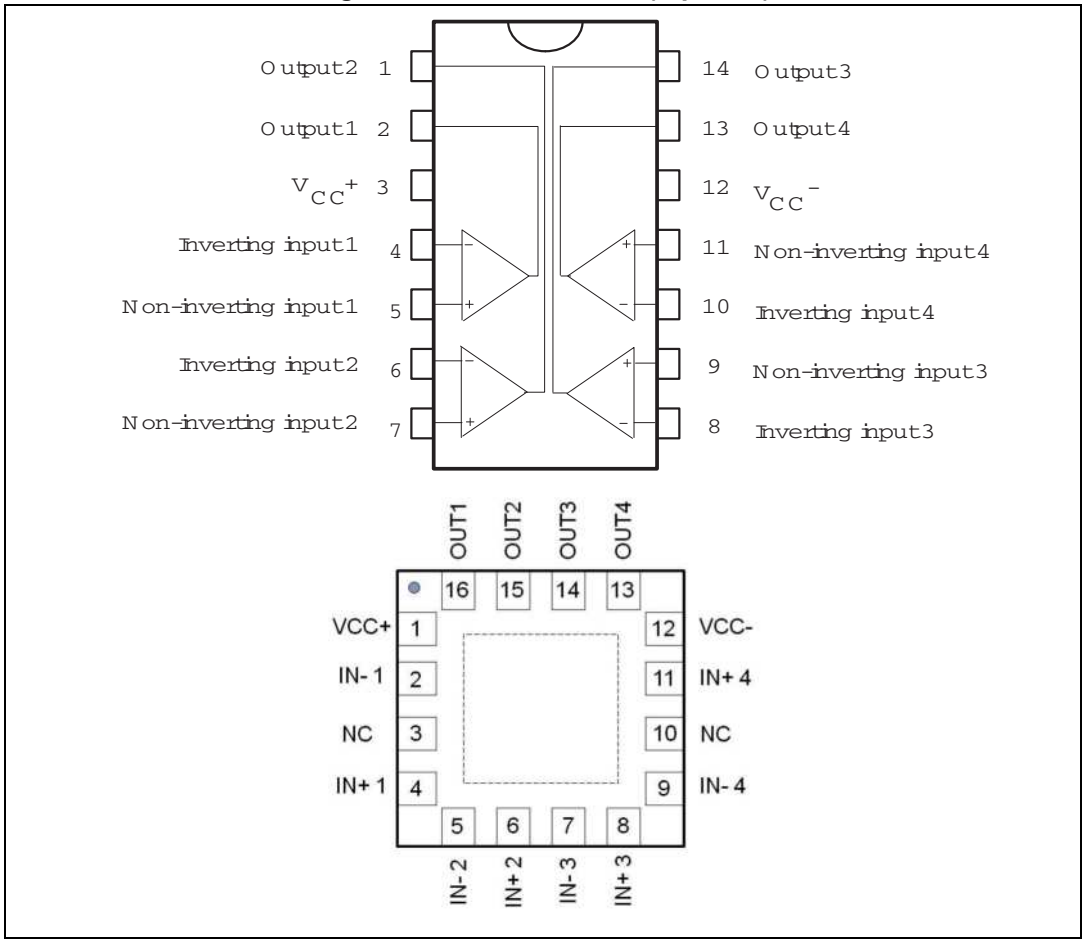

Figure 2. Schematic diagram (1/4 LM139)

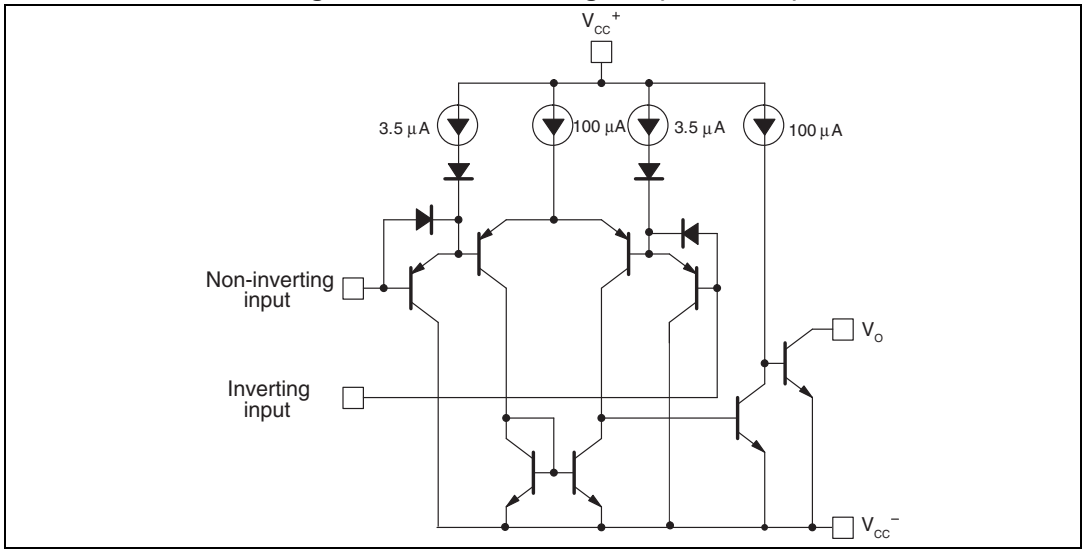

2 Absolute maximum ratings and operating conditions

Table 1. Absolute maximum ratings

Symbol	Parameter	Value	Unit
V_{CC}	Supply voltage	±18 or 36	V
V_{ID}	Differential input voltage	±36	V
V_{IN}	Input voltage	-0.3 to +36	V
	Output short-circuit to ground(1)	Infinite	
R_{thja}	Thermal resistance junction to ambient(2) SO14 TSSOP14 QFN16 3x3	 105 100 45	°C/W
R_{thjc}	Thermal resistance junction to case(2) SO14 TSSOP14 QFN16 3x3	 31 32 14	°C/W
T_{stg}	Storage temperature range	-65 to +150	°C
T_j	Junction temperature	+150	°C
T_{LEAD}	Lead temperature (soldering 10 seconds)	260	°C
ESD	Human body model (HBM)(3)	500	V
	Machine model (MM)(4)	100	
	Charged device model (CDM)(5)	1500	

1. Short-circuits from the output to V_{CC}^+ can cause excessive heating and eventual destruction. The maximum output current is approximately 20 mA independent of the magnitude of V_{CC}^+.
2. Short-circuits can cause excessive heating. These values are typical.
3. Human body model: a 100 pF capacitor is charged to the specified voltage, then discharged through a 1.5 kΩ resistor between two pins of the device. This is done for all couples of connected pin combinations while the other pins are floating.
4. Machine model: a 200 pF capacitor is charged to the specified voltage, then discharged directly between two pins of the device with no external series resistor (internal resistor < 5 Ω). This is done for all couples of connected pin combinations while the other pins are floating.
5. Charged device model: all pins and the package are charged together to the specified voltage and then discharged directly to the ground through only one pin. This is done for all pins.

Table 2. Operating conditions (T_{amb} = 25 °C)

Symbol	Parameter	Value	Unit
V_{CC}	Supply voltage	2 to 32 ±1 to ±16	V
V_{ICM}	Common mode input voltage range	0 to (V_{CC}^+ - 1.5)	V
T_{oper}	Operating free-air temperature range – LM139, LM139A – LM239, LM239A – LM339, LM339A	 -55, +125 -40, +105 0, +70	°C

3 Electrical characteristics

Table 3. Electrical characteristics at V_{CC}^+ = +5 V, V_{CC}^- = GND, T_{amb} = +25 °C (unless otherwise specified)

Symbol	Parameter	LM139A - LM239A LM339A			LM139 - LM239 LM339			Unit
		Min.	Typ.	Max.	Min	Typ.	Max.	
V_{IO}	Input offset voltage(1) $T_{min} \le T_{amb} \le T_{max}$		1	2 4		1	5 9	mV
I_{IO}	Input offset current $T_{min} \le T_{amb} \le T_{max}$		3	25 100		5	50 150	nA
I_{IB}	Input bias current (I^+ or I^-)(2) $T_{min} \le T_{amb} \le T_{max}$		25	100 300		25	250 400	nA
A_{VD}	Large signal voltage gain V_{CC} = 15 V, R_L = 15 kΩ, V_o = 1 V to 11 V	50	200		50	200		V/mV
I_{CC}	Supply current (all comparators) V_{CC} = +5 V, no load V_{CC} = +30 V, no load		1.1 1.3	2 2.5		1.1 1.3	2 2.5	mA
V_{ICM}	Input common mode voltage range(3) V_{CC} = 30 V $T_{min} \le T_{amb} \le T_{max}$	0 0		V_{CC}^+ -1.5 V_{CC}^+ -2	0 0		V_{CC}^+ -1.5 V_{CC}^+ -2	V
V_{ID}	Differential input voltage (4)			V_{CC}^+			V_{CC}^+	V
V_{OL}	Low level output voltage V_{ID} = -1 V, I_{SINK} = 4 mA $T_{min} \le T_{amb} \le T_{max}$		250	400 700		250	400 700	mV
I_{OH}	High level output current $V_{CC} = V_o$ = 30 V, V_{ID} = 1 V $T_{min} \le T_{amb} \le T_{max}$		0.1	 1		0.1	 1	nA µA
I_{SINK}	Output sink current V_{ID}= 1 V, V_o = 1.5 V	6	16		6	16		mA
t_{re}	Response time (5) R_L= 5.1 kΩ connected to V_{CC}^+		1.3			1.3		µs

Table 3. Electrical characteristics at V_{CC}^+ = +5 V, V_{CC}^- = GND, T_{amb} = +25 °C (unless otherwise specified) (continued)

Symbol	Parameter	LM139A - LM239A LM339A			LM139 - LM239 LM339			Unit
		Min.	Typ.	Max.	Min	Typ.	Max.	
trel	Large signal response time R_L = 5.1 kΩ connected to V_{CC}^+, e_I = TTL, $V_{(ref)}$ = +1.4 V		300			300		ns

1. At output switch point, $V_o \approx$ 1.4 V, V_{CC}^+ from 5 V to 30 V, and over the full common-mode range (0 V to V_{CC}^+ -1.5 V).
2. The direction of the input current is out of the IC due to the PNP input stage. This current is essentially constant, independent of the state of the output, so no loading charge exists on the reference of input lines.
3. The input common-mode voltage of either input signal voltage should not be allowed to go negative by more than 0.3 V. The upper end of the common-mode voltage range is V_{CC}^+ -1.5 V, but either or both inputs can go to +30 V without damage.
4. Positive excursions of input voltage may exceed the power supply level. As long as the other voltage remains within the common-mode range, the comparator will provide a proper output state. The low input voltage state must not be less than -0.3 V (or 0.3 V below the negative power supply, if used).
5. The response time specified is for a 100 mV input step with 5 mV overdrive. For larger overdrive signals, 300 ns can be obtained.

4 Electrical characteristics curves

Figure 3. Supply current vs. supply voltage

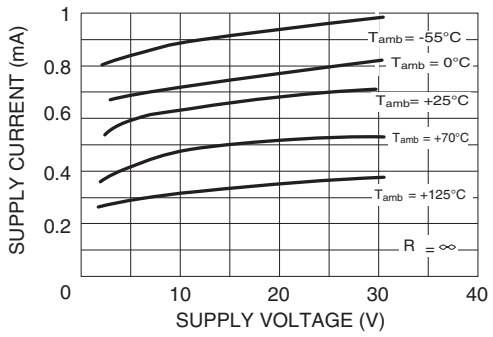

Figure 4. Input current vs. supply voltage

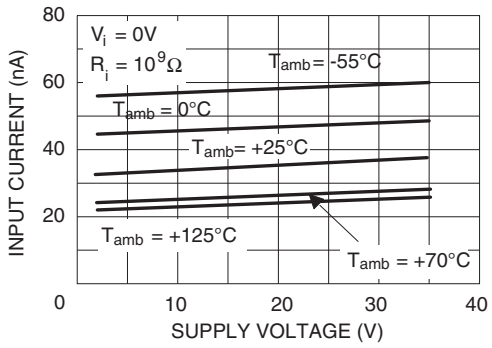

Figure 5. Output saturation voltage vs. output current

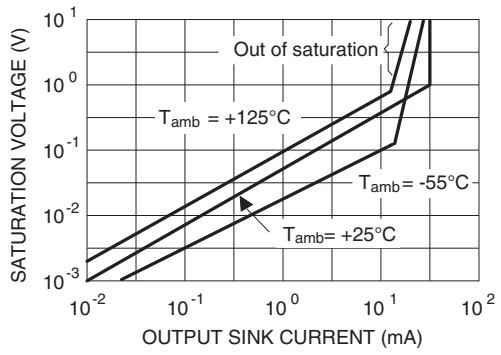

Figure 6. Response time for various input overdrives - negative transition

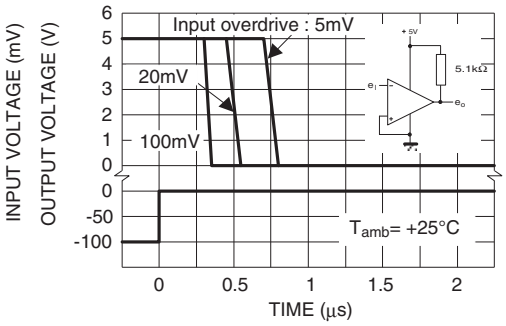

Figure 7. Response time for various input overdrives - positive transition

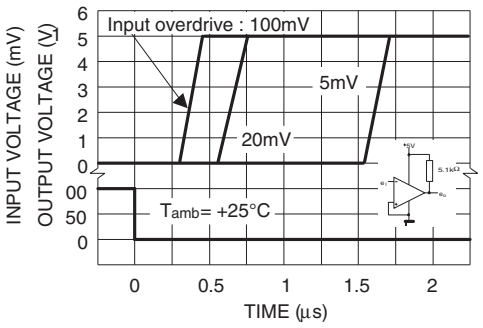

5 Typical applications

Figure 8. Basic comparator

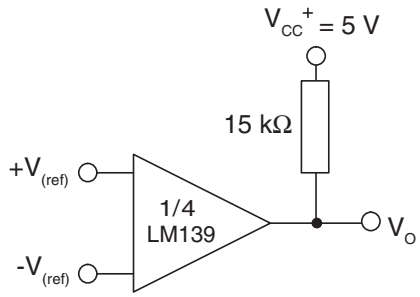

Figure 9. Driving CMOS

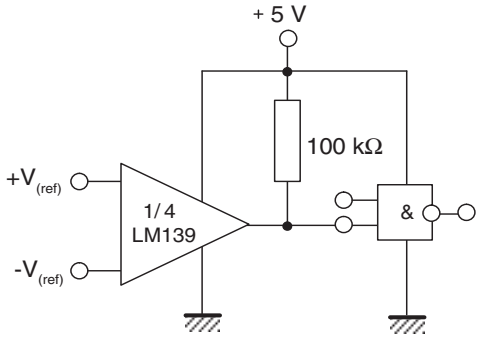

Figure 10. Driving TTL

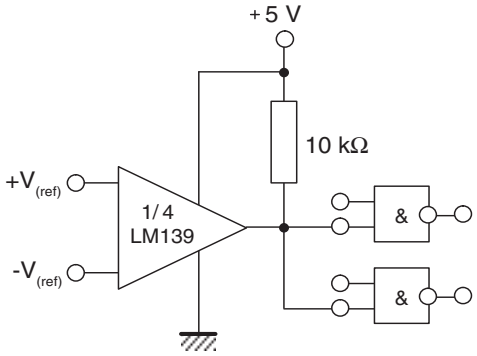

Figure 11. Low frequency op amp

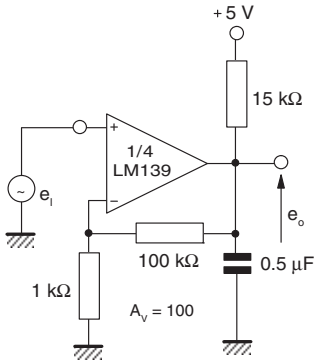

Figure 12. Low frequency op amp

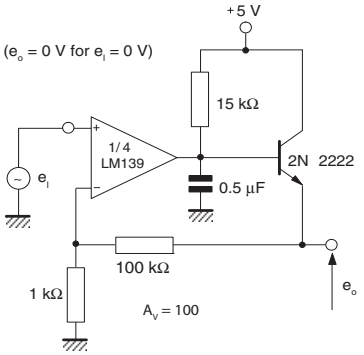

Figure 13. Transducer amplifier

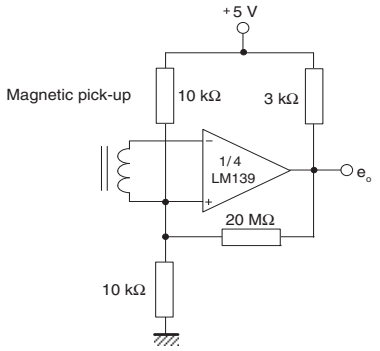

Figure 14. Time delay generator

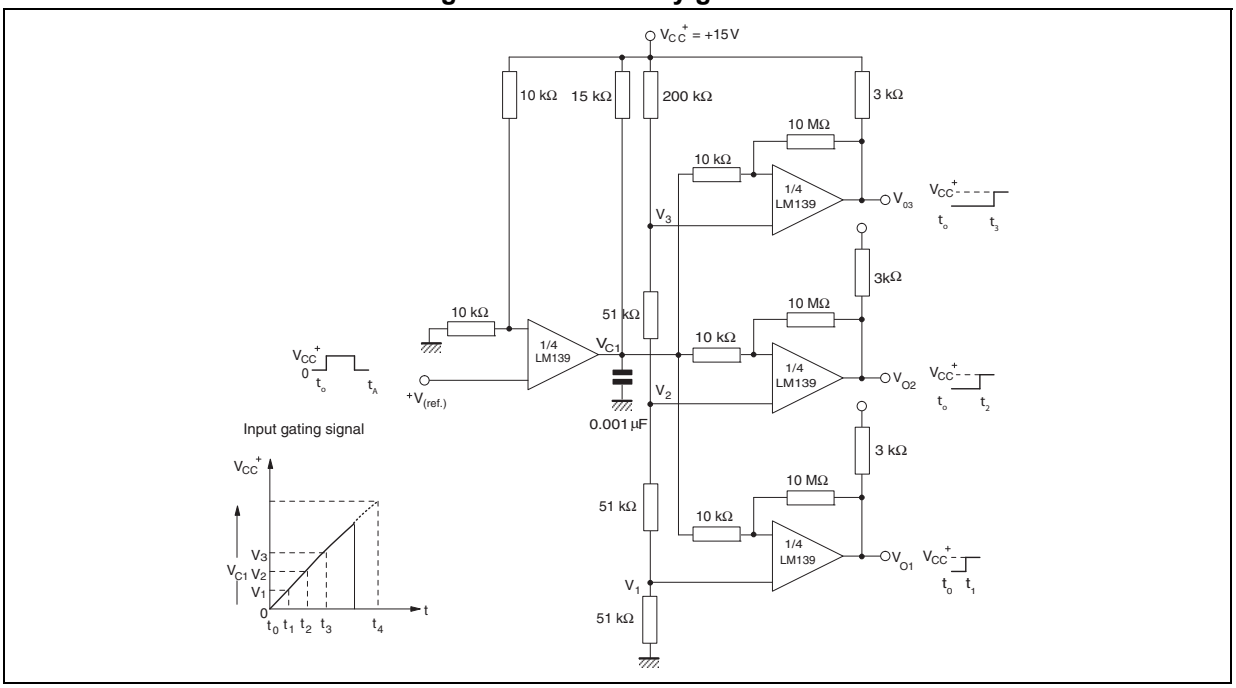

Figure 15. Low frequency op amp with offset adjust

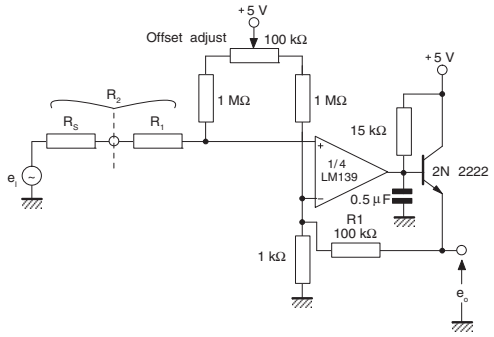

Figure 16. Zero crossing detector (single power supply)

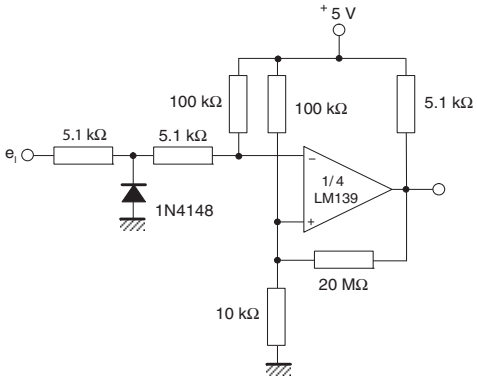

Figure 17. Two-decade high-frequency VCO

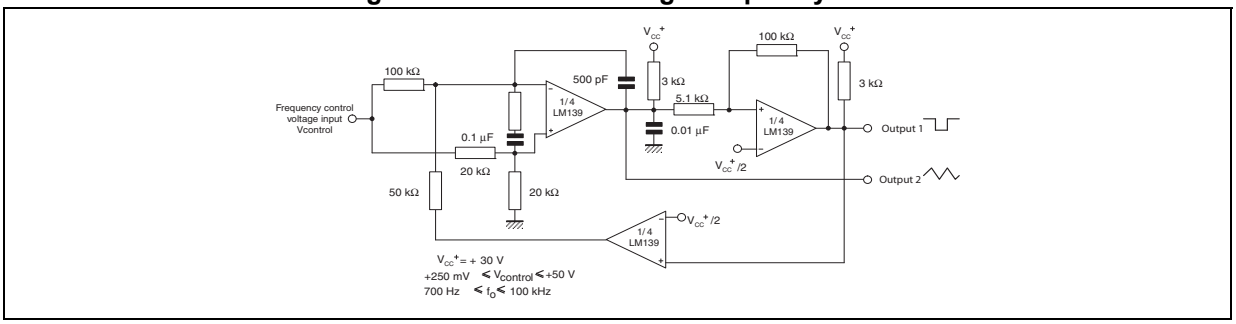

Figure 18. Limit comparator

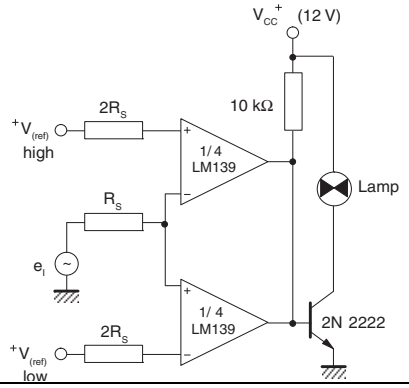

Figure 19. Crystal-controlled oscillator

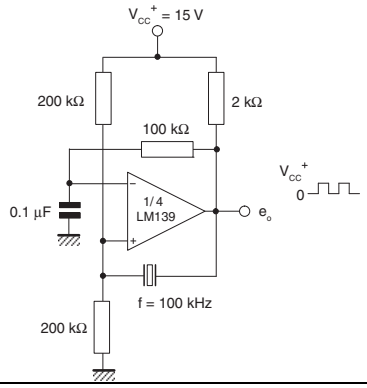

Figure 20. Zero crossing detector

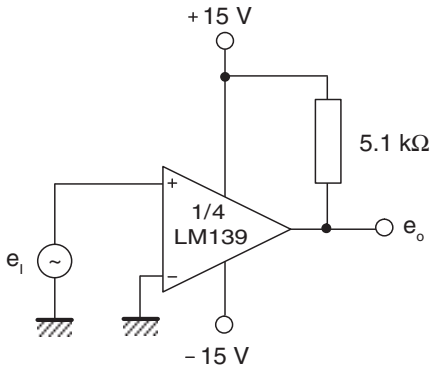

Figure 21. Comparator with a negative reference

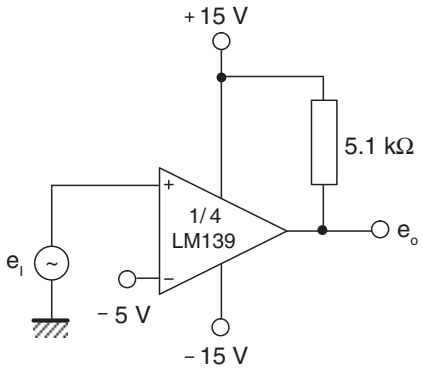

6 Package information

In order to meet environmental requirements, ST offers these devices in different grades of ECOPACK® packages, depending on their level of environmental compliance. ECOPACK® specifications, grade definitions and product status are available at: *www.st.com*.
ECOPACK® is an ST trademark.

6.1 SO14 package information

Figure 22. SO14 package mechanical drawing

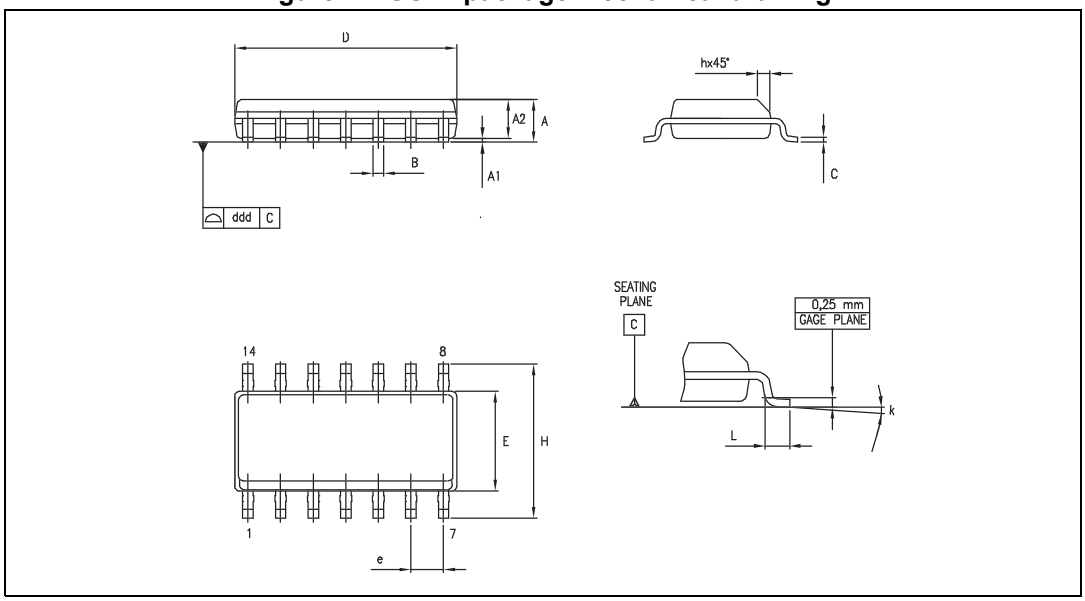

Table 4. SO14 package mechanical data

Dimensions						
Ref.	Millimeters			Inches		
	Min.	Typ.	Max.	Min.	Typ.	Max.
A	1.35		1.75	0.05		0.068
A1	0.10		0.25	0.004		0.009
A2	1.10		1.65	0.04		0.06
B	0.33		0.51	0.01		0.02
C	0.19		0.25	0.007		0.009
D	8.55		8.75	0.33		0.34
E	3.80		4.0	0.15		0.15
e		1.27			0.05	
H	5.80		6.20	0.22		0.24
h	0.25		0.50	0.009		0.02
L	0.40		1.27	0.015		0.05
k	8° (max.)					
ddd			0.10			0.004

6.2 TSSOP14 package information

Figure 23. TSSOP14 package mechanical drawing

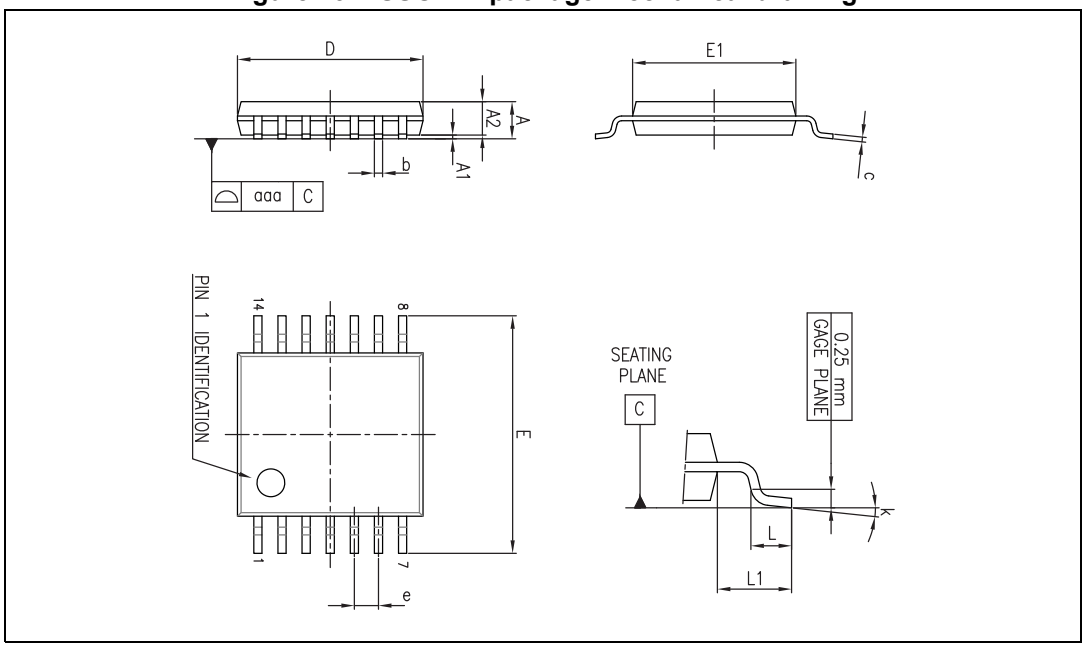

Table 5. TSSOP14 package mechanical data

Ref.	Dimensions					
	Millimeters			Inches		
	Min.	Typ.	Max.	Min.	Typ.	Max.
A			1.20			0.047
A1	0.05		0.15	0.002	0.004	0.006
A2	0.80	1.00	1.05	0.031	0.039	0.041
b	0.19		0.30	0.007		0.012
c	0.09		0.20	0.004		0.0089
D	4.90	5.00	5.10	0.193	0.197	0.201
E	6.20	6.40	6.60	0.244	0.252	0.260
E1	4.30	4.40	4.50	0.169	0.173	0.176
e		0.65			0.0256	
L	0.45	0.60	0.75	0.018	0.024	0.030
L1		1.00			0.039	
k	0°		8°	0°		8°
aaa			0.10			0.004

6.3 QFN16 3x3 package information

Figure 24. QFN16 3x3 package mechanical drawing

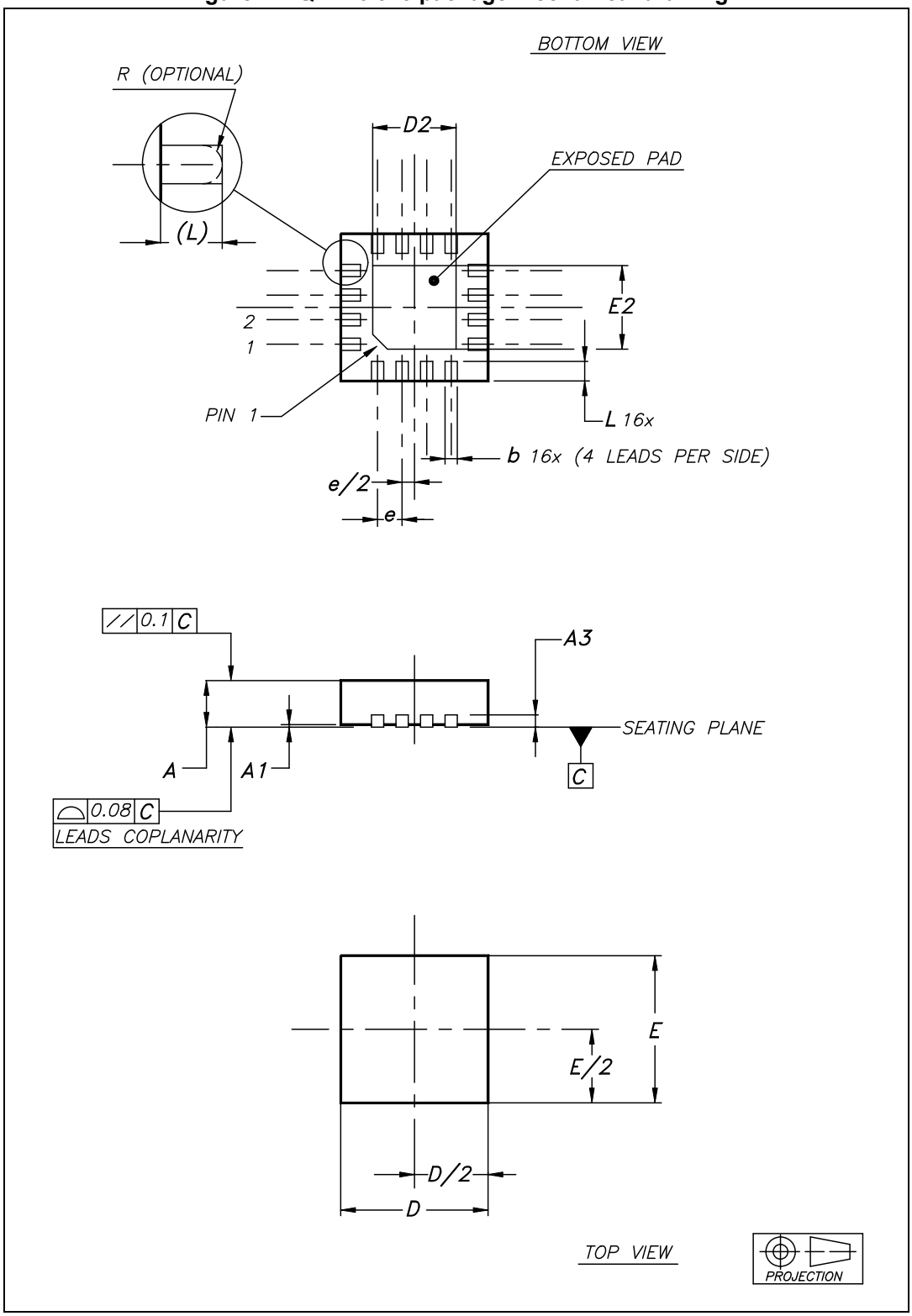

Table 6. QFN16 3x3 mm package mechanical data (pitch 0.5 mm)

Ref.	Dimensions					
	Millimeters			Inches		
	Min.	Typ.	Max.	Min.	Typ.	Max.
A	0.80	0.90	1.00	0.031	0.035	0.039
A1	0		0.05	0		0.002
A3		0.20			0.008	
b	0.18		0.30	0.007		0.012
D	2.90	3.00	3.10	0.114	0.118	0.122
D2	1.50		1.80	0.059		0.071
E	2.90	3.00	3.10	0.114	0.118	0.122
E2	1.50		1.80	0.059		0.071
e		0.50			0.020	
L	0.30		0.50	0.012		0.020

Figure 25. QFN16 3x3 footprint recommendation

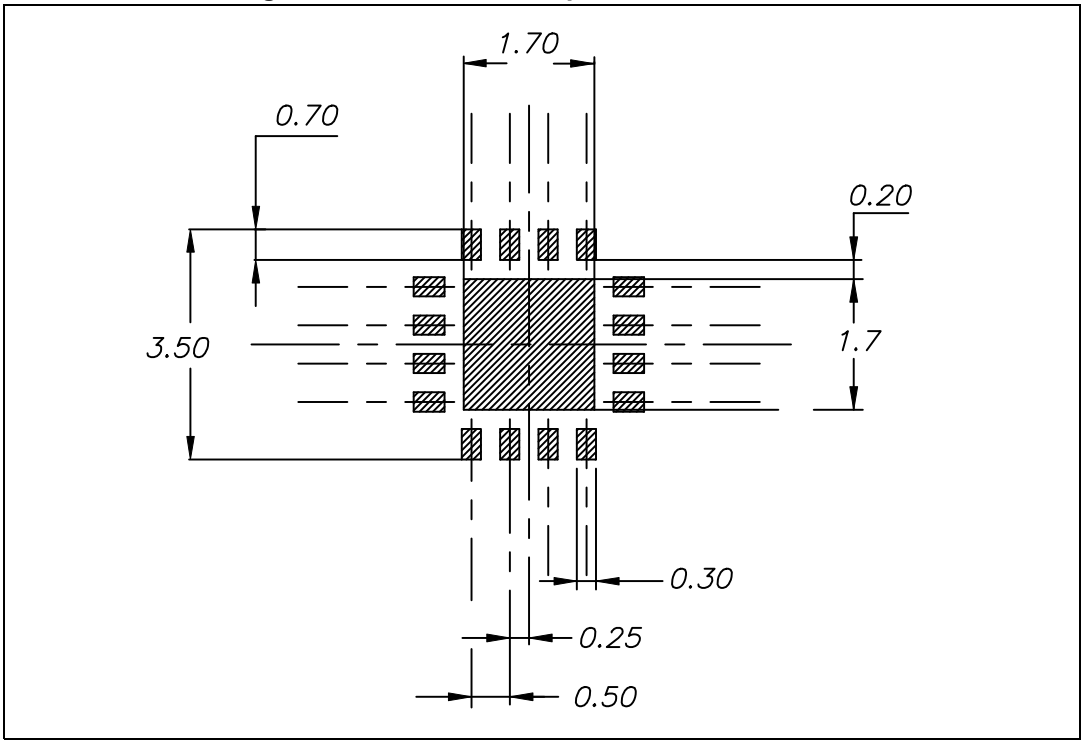

7 Ordering information

Table 7. Order codes

Part number	Temperature range	Package	Packing	Marking
LM139DT LM139ADT	-55 °C, +125 °C	SO14	Tape and reel	139 139A
LM139PT LM139APT		TSSOP14		139 139A
LM239DT LM239ADT	-40 °C, +105 °C	SO14		239 239A
LM239PT LM239APT		TSSOP14		239 239A
LM239QT		QFN16 3x3		K550
LM339DT LM339ADT	0 °C, +70 °C	SO14		339 339A
LM339PT LM339APT		TSSOP14		339 339A
LM339QT		QFN16 3x3		K551

8 Revision history

Table 8. Document revision history

Date	Revision	Changes
01-Mar-2003	1	Initial release.
28-Apr-2009	2	Updated document format. Removed power dissipation from *Table 1: Absolute maximum ratings*. Added R_{THJA}, $R_{THJC,}$ ESD and T_{LEAD} values to *Table 1*. Updated package information in *Chapter 6*. Added *Table 7: Order codes*.
13-Jul-2011	3	Added pin connections for QFN16 package in *Figure 1 on page 3*. Added thermal information for QFN16 package in *Table 1 on page 4*. Added QFN16 package information in *Chapter 6*. Added order codes for QFN16 package in *Table 7: Order codes*.
18-Aug-2014	4	Removed DIP14 package *Table 7: Order codes*: replaced the marking of the order code LM239QT from K549 to K550; removed all order codes with “tube” packing. Updated disclaimer

IMPORTANT NOTICE – PLEASE READ CAREFULLY

STMicroelectronics NV and its subsidiaries (“ST”) reserve the right to make changes, corrections, enhancements, modifications, and improvements to ST products and/or to this document at any time without notice. Purchasers should obtain the latest relevant information on ST products before placing orders. ST products are sold pursuant to ST’s terms and conditions of sale in place at the time of order acknowledgement.

Purchasers are solely responsible for the choice, selection, and use of ST products and ST assumes no liability for application assistance or the design of Purchasers’ products.

No license, express or implied, to any intellectual property right is granted by ST herein.

Resale of ST products with provisions different from the information set forth herein shall void any warranty granted by ST for such product.

ST and the ST logo are trademarks of ST. All other product or service names are the property of their respective owners.

Information in this document supersedes and replaces information previously supplied in any prior versions of this document.

© 2014 STMicroelectronics – All rights reserved