LM158, LM258, LM358

Low-power dual operational amplifiers

Datasheet - production data

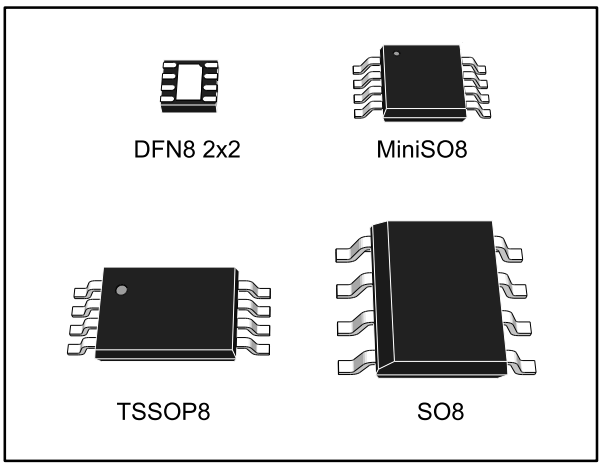

Features

- Frequency compensation implemented internally
- Large DC voltage gain: 100 dB
- Wide bandwidth (unity gain): 1.1 MHz (temperature compensated)
- Very low supply current per channel essentially independent of supply voltage
- Low input bias current: 20 nA (temperature compensated)
- Low input offset voltage: 2 mV
- Low input offset current: 2 nA
- Input common-mode voltage range includes negative rails
- Differential input voltage range equal to the power supply voltage
- Large output voltage swing 0 V to (V_{CC}^+ - 1.5 V)

Related products

- See LM158W for enhanced ESD ratings

Description

These circuits consist of two independent, high-gain, internally frequency-compensated op amps, specifically designed to operate from a single power supply over a wide range of voltages. The low-power supply drain is independent of the magnitude of the power supply voltage.

Application areas include transducer amplifiers, DC gain blocks and all the conventional op amp circuits, which can now be more easily implemented in single power supply systems. For example, these circuits can be directly supplied with the standard 5 V, which is used in logic systems and will easily provide the required interface electronics with no additional power supply.

In linear mode, the input common-mode voltage range includes ground and the output voltage can also swing to ground, even though operated from only a single power supply voltage.

This is information on a product in full production.

www.st.com

Contents

1 Schematic diagram 3
2 Package pin connections 4
3 Absolute maximum ratings 5
4 Electrical characteristics 7
5 Electrical characteristic curves 9
6 Typical applications 12
7 Package information 14
7.1 SO8 package information 15
7.2 MiniSO8 package information 16
7.3 DFN8 2x2 package information 17
7.4 TSSOP8 package information 19
8 Ordering information 20
9 Revision history 21

1 Schematic diagram

Figure 1: Schematic diagram (1/2 LM158)

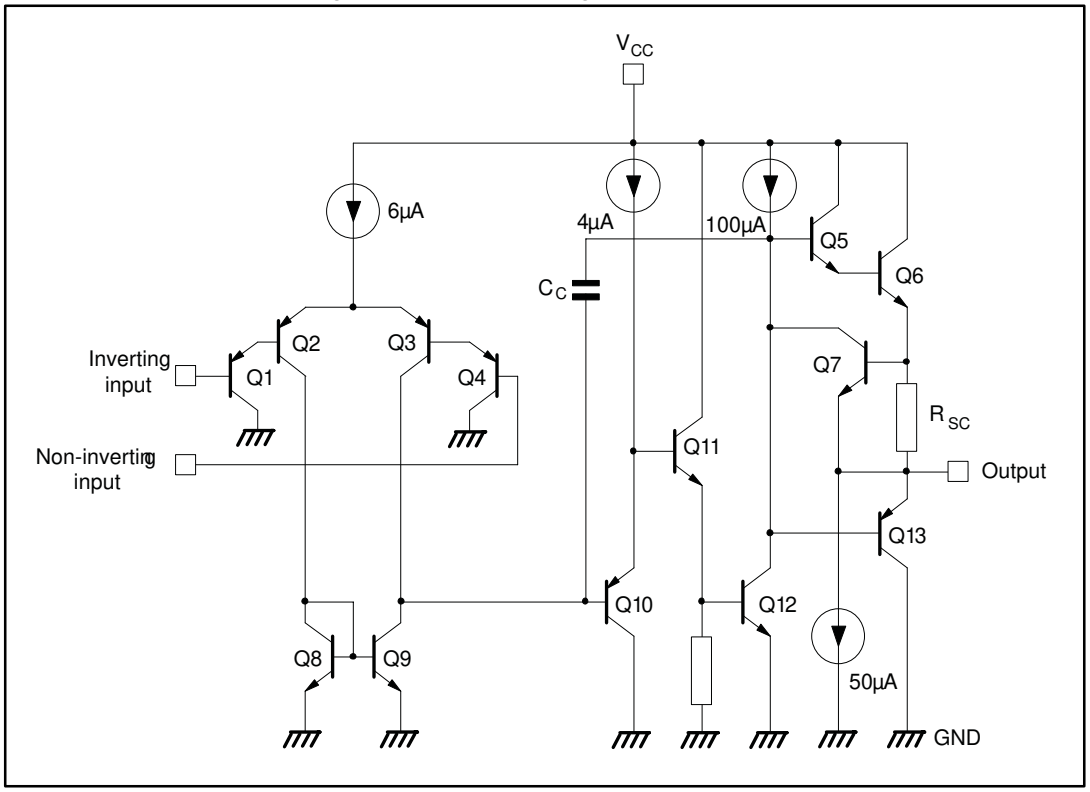

2 Package pin connections

Figure 2: Pin connections (top view)

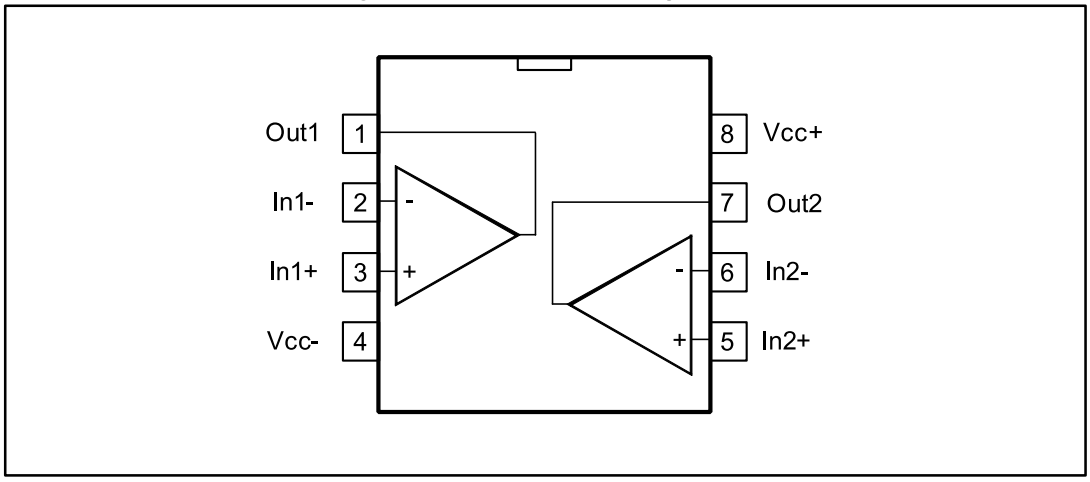

1. The exposed pad of the DFN8 2x2 can be left floating or connected to ground

3 Absolute maximum ratings

Table 1: Absolute maximum ratings

Symbol	Parameter		LM158,A	LM258,A	LM358,A	Unit
V_{CC}	Supply voltage		±16 or 32			V
V_i	Input voltage		32			
V_{id}	Differential input voltage		32			
	Output short-circuit duration (1)		Infinite			
I_{in}	Input current (2)		5 mA in DC or 50 mA in AC (duty cycle = 10 %, T = 1 s)			mA
T_{oper}	Operating free-air temperature range		-55 to 125	-40 to 105	0 to 70	°C
T_{stg}	Storage temperature range		-65 to 150			
T_j	Maximum junction temperature		150			
R_{thja}	Thermal resistance junction to ambient (3)	SO8	125			°C/W
		MiniSO8	190			
		DFN8 2x2	57			
		TSSOP8	120			
R_{thjc}	Thermal resistance junction to case (3)	SO8	40			
		MiniSO8	39			
		TSSOP8	37			
ESD	HBM: human body model (4)		300			V
	MM: machine model (5)		200			
	CDM: charged device model (6)		1.5			kV

Notes:

(1)Short-circuits from the output to V_{CC} can cause excessive heating if V_{CC} > 15 V. The maximum output current is approximately 40 mA independent of the magnitude of V_{CC}. Destructive dissipation can result from simultaneous short circuits on all amplifiers.

(2)This input current only exists when the voltage at any of the input leads is driven negative. It is due to the collector-base junction of the input PNP transistor becoming forward-biased and thereby acting as input diode clamp. In addition to this diode action, there is NPN parasitic action on the IC chip. This transistor action can cause the output voltages of the op amps to go to the V_{CC} voltage level (or to ground for a large overdrive) for the time during which an input is driven negative. This is not destructive and normal output is restored for input voltages above -0.3 V.

(3)Short-circuits can cause excessive heating and destructive dissipation. R_{th} are typical values.

(4)Human body model: a 100 pF capacitor is charged to the specified voltage, then discharged through a 1.5 kΩ resistor between two pins of the device. This is done for all couples of connected pin combinations while the other pins are floating.

(5)Machine model: a 200 pF capacitor is charged to the specified voltage, then discharged directly between two pins of the device with no external series resistor (internal resistor < 5 Ω). This is done for all couples of connected pin combinations while the other pins are floating.

(6)Charged device model: all pins and the package are charged together to the specified voltage and then discharged directly to the ground through only one pin. This is done for all pins.

Table 2: Operating conditions

Symbol	Parameter		Value	Unit
V_{CC}	Supply voltage		3 to 30	V
V_{icm}	Common mode input voltage range (1)		(V_{CC}^-) - 0.3 to (V_{CC}^+) - 1.5	
T_{oper}	Operating free air temperature range	LM158	-55 to 125	°C
		LM258	-40 to 105	
		LM358	0 to 70	

Notes:

(1)When used in comparator, the functionality is guaranteed as long as at least one input remains within the operating common mode voltage range.

4 Electrical characteristics

Table 3: Electrical characteristics for VCC+ = 5 V, VCC- = Ground, Vo = 1.4 V, Tamb = 25 °C (unless otherwise specified)

Symbol	Parameter		Min.	Typ.	Max.	Unit
V_{io}	Input offset voltage (1)	LM158A			2	mV
		LM258A, LM358A		1	3	
		LM158, LM258			5	
		LM358		2	7	
	$T_{min} \le T_{amb} \le T_{max}$	LM158A, LM258A, LM358A			4	
		LM158, LM258			7	
		LM358			9	
$\Delta V_{io}/\Delta T$	Input offset voltage drift	LM158A, LM258A, LM358A		7	15	µV/°C
		LM158, LM258, LM358		7	30	
I_{io}	Input offset current	LM158A, LM258A, LM358A		2	10	nA
		LM158, LM258, LM358		2	30	
	$T_{min} \le T_{amb} \le T_{max}$	LM158A, LM258A, LM358A			30	
		LM158, LM258, LM358			40	
$\Delta I_{io}/\Delta T$	Input offset current drift	LM158A, LM258A, LM358A		10	200	pA/°C
		LM158, LM258, LM358		10	300	
I_{ib}	Input bias current (2)	LM158A, LM258A, LM358A		20	50	nA
		LM158, LM258, LM358		20	150	
	$T_{min} \le T_{amb} \le T_{max}$	LM158A, LM258A, LM358A			100	
		LM158, LM258, LM358			200	
A_{vd}	Large signal voltage gain	V_{CC}^+ = 15 V, R_L = 2 kΩ, V_o = 1.4 V to 11.4 V	50	100		V/mV
		$T_{min} \le T_{amb} \le T_{max}$	25			
SVR	Supply voltage rejection ratio	V_{CC}^+ = 5 V to 30 V, $R_s \le 10$ kΩ	65	100		dB
		$T_{min} \le T_{amb} \le T_{max}$	65			
I_{CC}	Supply current, all amp, no load	$T_{min} \le T_{amb} \le T_{max}$ V_{CC}^+ = 5 V		0.7	1.2	mA
		$T_{min} \le T_{amb} \le T_{max}$ V_{CC}^+ = 30 V			2	
V_{icm}	Input common mode voltage range	V_{CC}^+ = 30 V (3)	0		(V_{CC}^+) - 1.5	V
		$T_{min} \le T_{amb} \le T_{max}$	0		(V_{CC}^+) - 2	
CMR	Common mode rejection ratio	$R_s \le 10$ kΩ	70	85		dB
		$T_{min} \le T_{amb} \le T_{max}$	60			
I_{source}	Output current source	V_{CC}^+ = 15 V, V_o = 2 V, V_{id} = 1 V	20	40	60	mA
I_{sink}	Output sink current	V_{CC}^+ = 15 V, V_o = 2 V, V_{id} = -1 V	10	20		mA
		V_{CC}^+ = 15 V, V_o = 0.2 V, V_{id} = -1 V	12	50		µA

Symbol	Parameter		Min.	Typ.	Max.	Unit
V_{OH}	High level output voltage	R_L = 2 kΩ, V_{CC}^+ = 30 V	26	27		V
		$T_{min} \le T_{amb} \le T_{max}$	26			
		R_L = 10 kΩ, V_{CC}^+ = 30 V	27	28		
		$T_{min} \le T_{amb} \le T_{max}$	27			
V_{OL}	Low level output voltage	R_L = 10 kΩ		5	20	mV
		$T_{min} \le T_{amb} \le T_{max}$			20	
SR	Slew rate	V_{CC}^+ = 15 V, V_i = 0.5 to 3 V, R_L = 2 kΩ, C_L = 100 pF, unity gain	0.3	0.6		V/µs
GBP	Gain bandwidth product	V_{CC}^+ = 30 V, f = 100 kHz, V_{in} = 10 mV, R_L = 2 kΩ, C_L = 100 pF	0.7	1.1		MHz
THD	Total harmonic distortion	f = 1 kHz, A_v = 20 dB, R_L = 2 kΩ, V_o = 2 V_{pp}, C_L = 100 pF, V_O = 2 V_{pp}		0.02		%
e_n	Equivalent input noise voltage	f = 1 kHz, R_s = 100 Ω, V_{CC}^+ = 30 V		55		$\frac{nV}{\sqrt{Hz}}$
V_{o1}/V_{o2}	Channel separation (4)	1 kHz ≤ f ≤ 20 kHz		120		dB

Notes:

(1)V_o = 1.4 V, R_s = 0 Ω, 5 V < V_{CC}^+ < 30 V, 0 < V_{ic} < V_{CC}^+ - 1.5 V

(2)The direction of the input current is out of the IC. This current is essentially constant, independent of the state of the output so there is no change in the load on the input lines.

(3)The input common-mode voltage of either input signal voltage should not be allowed to go negative by more than 0.3 V. The upper end of the common-mode voltage range is (V_{CC}^+) - 1.5 V, but either or both inputs can go to 32 V without damage.

(4)Due to the proximity of external components, ensure that stray capacitance between these external parts does not cause coupling. Typically, this can be detected because this type of capacitance increases at higher frequencies.

5 Electrical characteristic curves

Figure 3: Open-loop frequency response

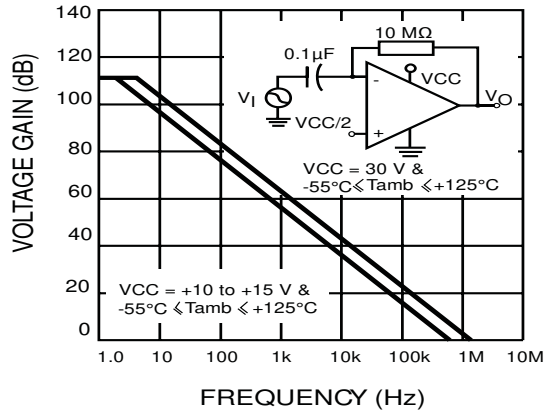

Figure 4: Large signal frequency response

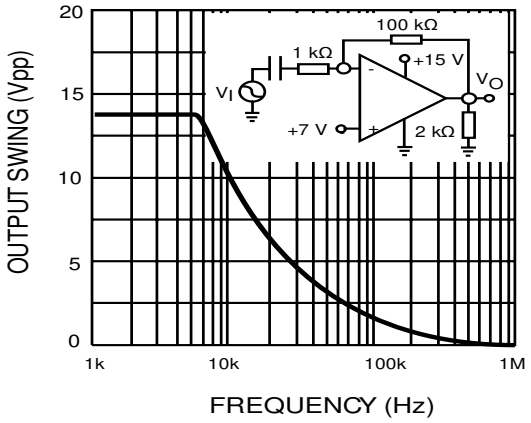

Figure 5: Voltage follower pulse response with VCC = 15 V

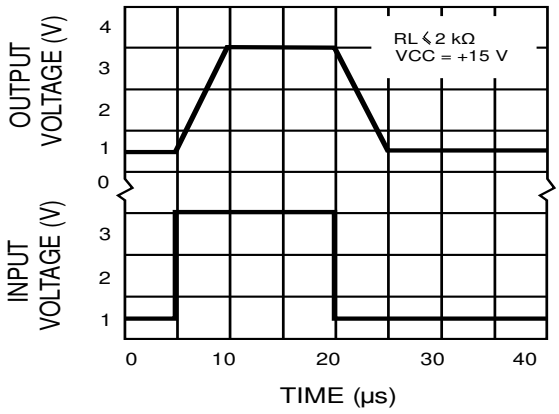

Figure 6: Voltage follower pulse response with VCC = 30 V

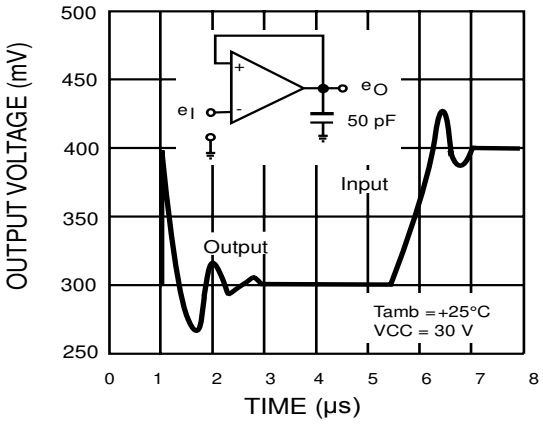

Figure 7: Input current

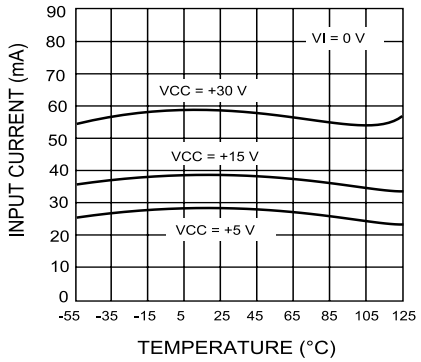

Figure 8: Output voltage vs sink current

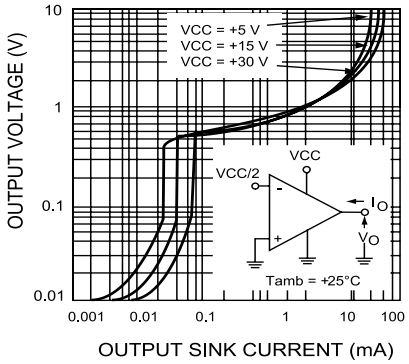

Figure 9: Output voltage vs source current

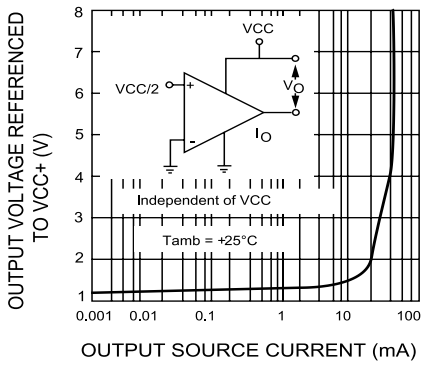

Figure 10: Current limiting

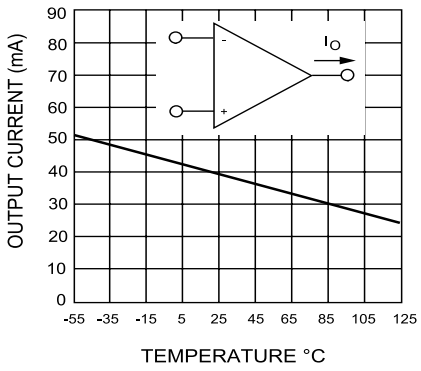

Figure 11: Input voltage range

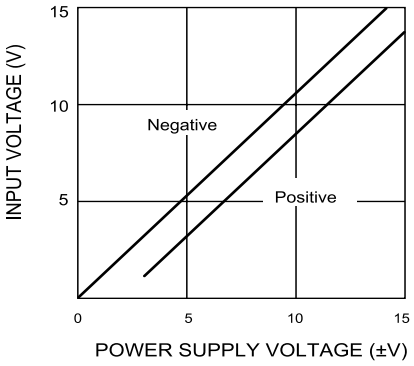

Figure 12: Open-loop gain

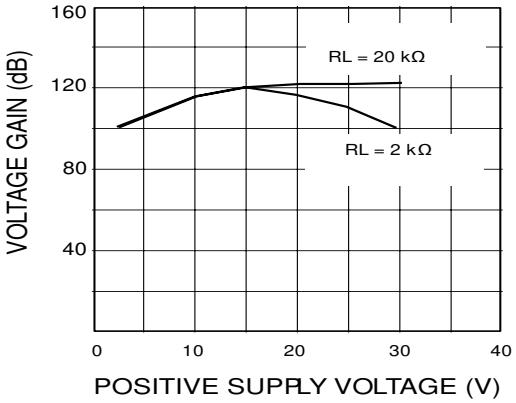

Figure 13: Supply current

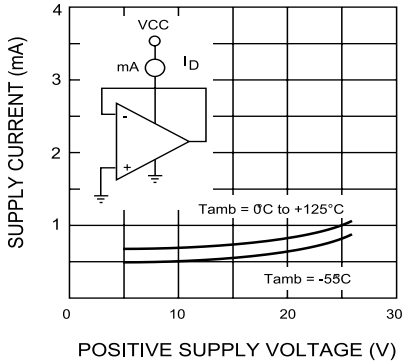

Figure 14: Input current

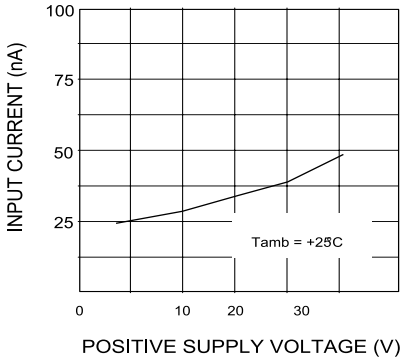

Figure 15: Gain bandwidth product

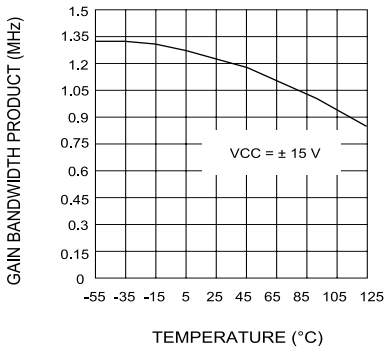

Figure 16: Power supply rejection ratio

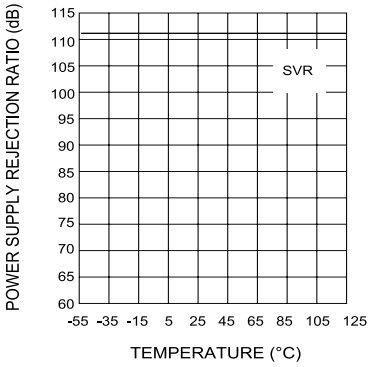

Figure 17: Common-mode rejection ratio

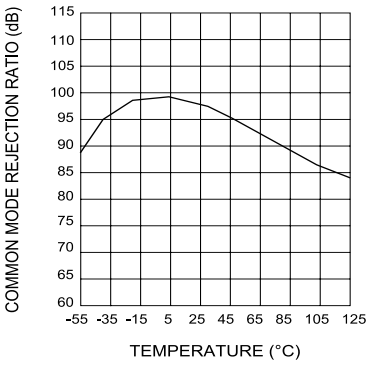

Figure 18: Phase margin vs. capacitive load

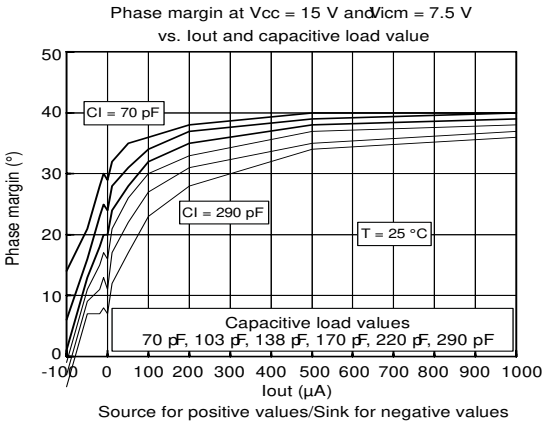

6 Typical applications

Single supply voltage V_{CC} = 5 V_{DC}.

Figure 19: AC-coupled inverting amplifier

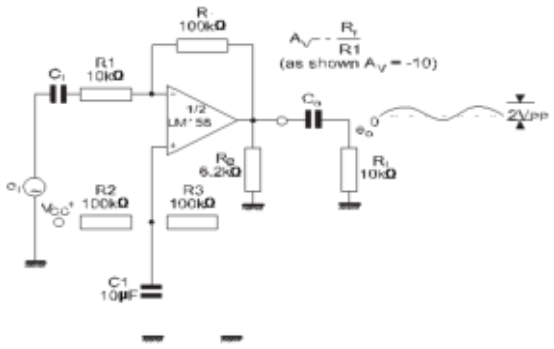

Figure 20: Non-inverting DC amplifier

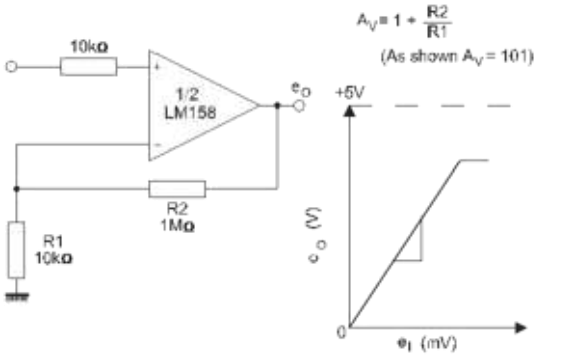

Figure 21: AC-coupled non-inverting amplifier

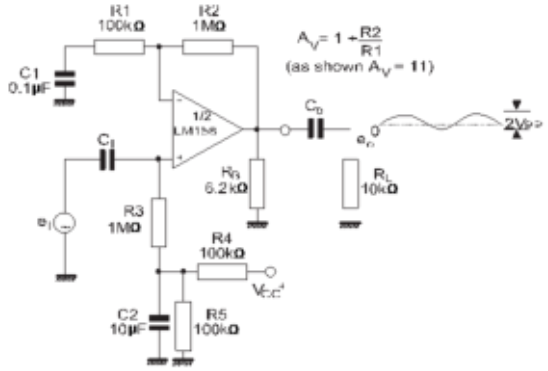

Figure 22: DC summing amplifier

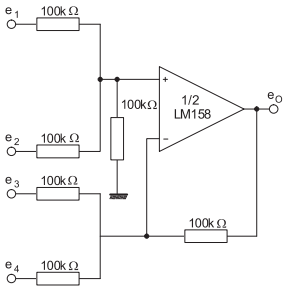

$e_o = e_1 + e_2 - e_3 - e_4$
where $(e1 + e_2) \geq (e_3 + e_4)$
to keep $e_o \geq 0V$

Figure 23: High input Z, DC differential amplifier

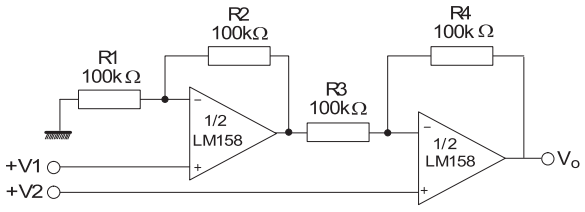

if R1 = R5 and R3 = R4 = R6 = R7
$e_o = [1 + \frac{2R1}{R2}] ((e_2 + e_1)$
As shown $e_o = 101 (e_2 + e_1)$

Figure 24: High input Z adjustable gain DC instrumentation amplifier

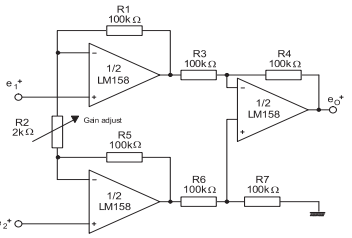

if R1 = R5 and
R3 = R4 = R6 = R7
$e_o = [1 + \frac{2R1}{R2}] ((e_2 + e_1)$

As shown $e_o = 101 (e_2 + e_1)$

Figure 25: Using symmetrical amplifiers to reduce input current

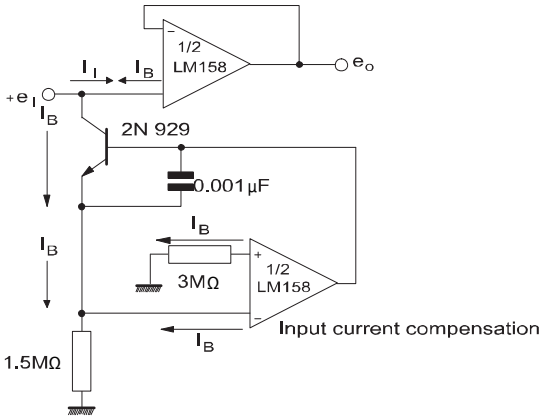

Figure 26: Low drift peak detector

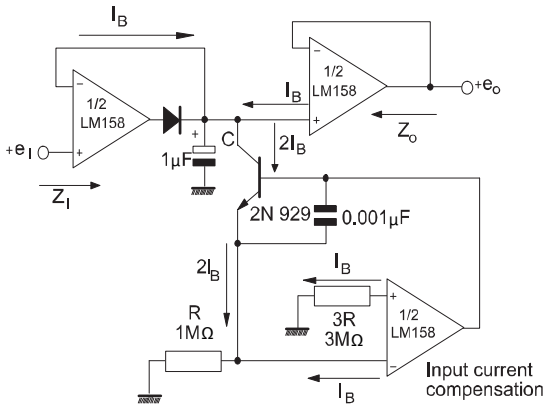

Figure 27: Active band-pass filter

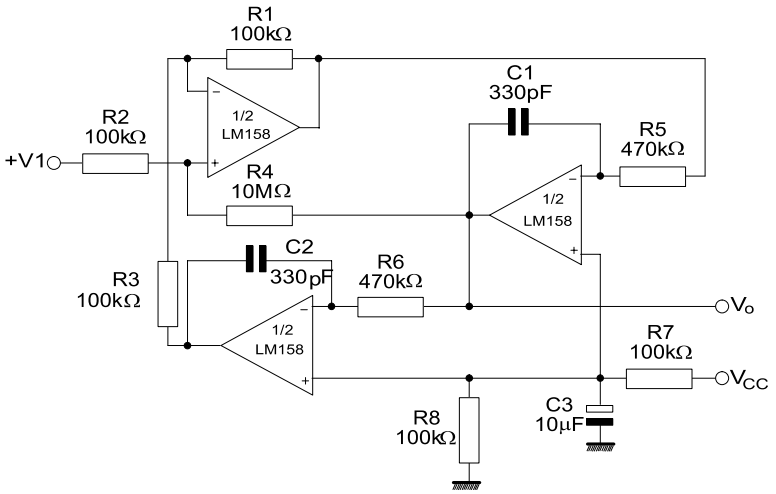

7 Package information

In order to meet environmental requirements, ST offers these devices in different grades of ECOPACK® packages, depending on their level of environmental compliance. ECOPACK® specifications, grade definitions and product status are available at: www.st.com. ECOPACK® is an ST trademark.

7.1 SO8 package information

Figure 28: SO8 package outline

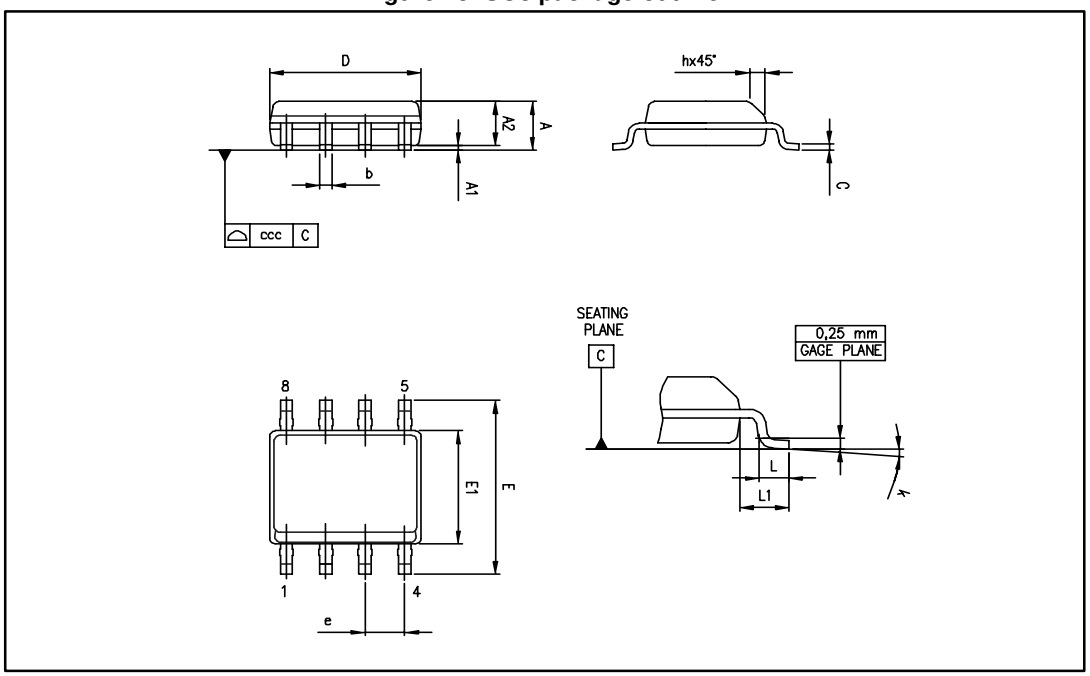

Table 4: SO8 mechanical data

Ref.	Dimensions					
	Millimeters			Inches		
	Min.	Typ.	Max.	Min.	Typ.	Max
A			1.75			0.069
A1	0.10		0.25	0.004		0.010
A2	1.25			0.049		
b	0.28		0.48	0.011		0.019
c	0.17		0.23	0.007		0.010
D	4.80	4.90	5.00	0.189	0.193	0.197
E	5.80	6.00	6.20	0.228	0.236	0.244
E1	3.80	3.90	4.00	0.150	0.154	0.157
e		1.27			0.050	
h	0.25		0.50	0.010		0.020
L	0.40		1.27	0.016		0.050
L1		1.04			0.040	
k	1°		8°	1°		8°
ccc			0.10			0.004

7.2 MiniSO8 package information

Figure 29: MiniSO8 package outline

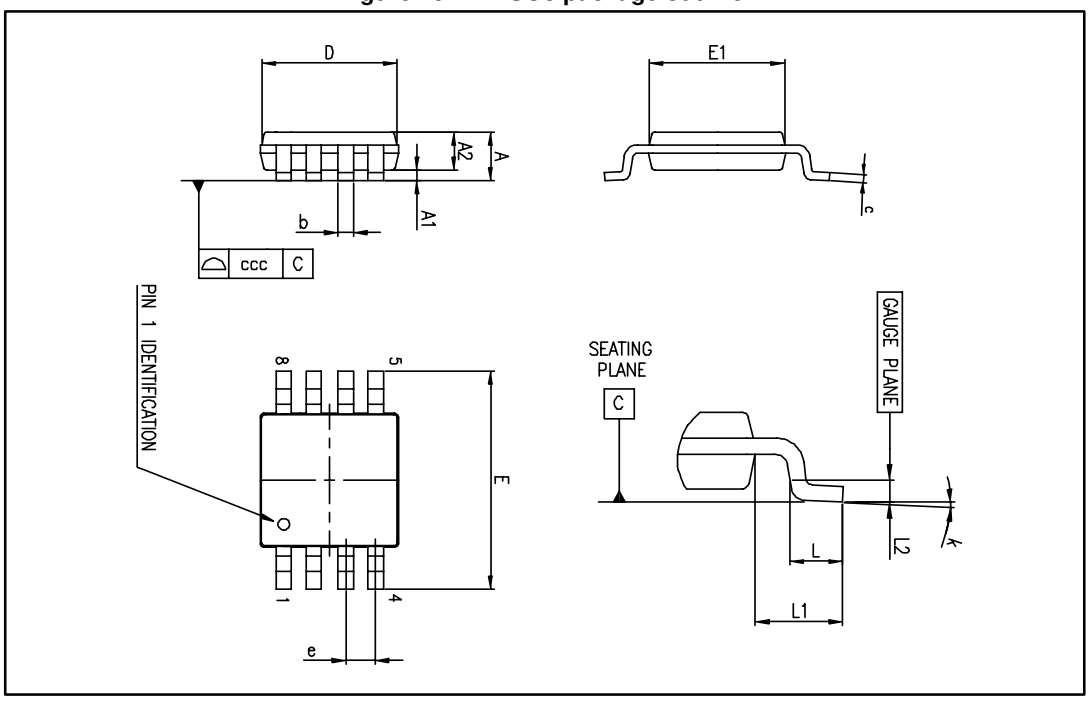

Table 5: MiniSO8 mechanical data

Ref.	Dimensions					
	Millimeters			Inches		
	Min.	Typ.	Max.	Min.	Typ.	Max.
A			1.1			0.043
A1	0		0.15	0		0.006
A2	0.75	0.85	0.95	0.030	0.033	0.037
b	0.22		0.40	0.009		0.016
c	0.08		0.23	0.003		0.009
D	2.80	3.00	3.20	0.11	0.118	0.126
E	4.65	4.90	5.15	0.183	0.193	0.203
E1	2.80	3.00	3.10	0.11	0.118	0.122
e		0.65			0.026	
L	0.40	0.60	0.80	0.016	0.024	0.031
L1		0.95			0.037	
L2		0.25			0.010	
k	0°		8°	0°		8°
ccc			0.10			0.004

7.3 DFN8 2x2 package information

Figure 30: DFN8 2x2 package outline

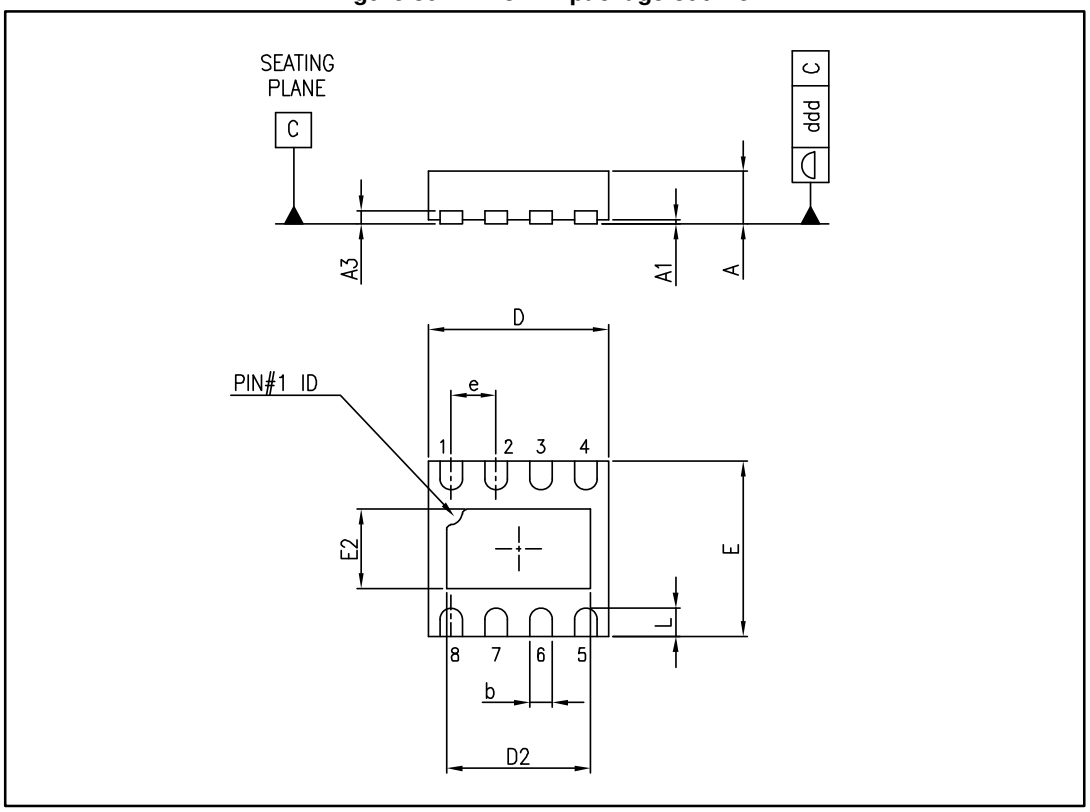

Table 6: DFN8 2x2 mechanical data

Ref.	Dimensions					
	Millimeters			Inches		
	Min.	Typ.	Max.	Min.	Typ.	Max.
A	0.51	0.55	0.60	0.020	0.022	0.024
A1			0.05			0.002
A3		0.15			0.006	
b	0.18	0.25	0.30	0.007	0.010	0.012
D	1.85	2.00	2.15	0.073	0.079	0.085
D2	1.45	1.60	1.70	0.057	0.063	0.067
E	1.85	2.00	2.15	0.073	0.079	0.085
E2	0.75	0.90	1.00	0.030	0.035	0.039
e		0.50			0.020	
L		0.3	0.425		0.012	0.017
ddd			0.08			0.003

Figure 31: DFN8 2x2 recommended footprint

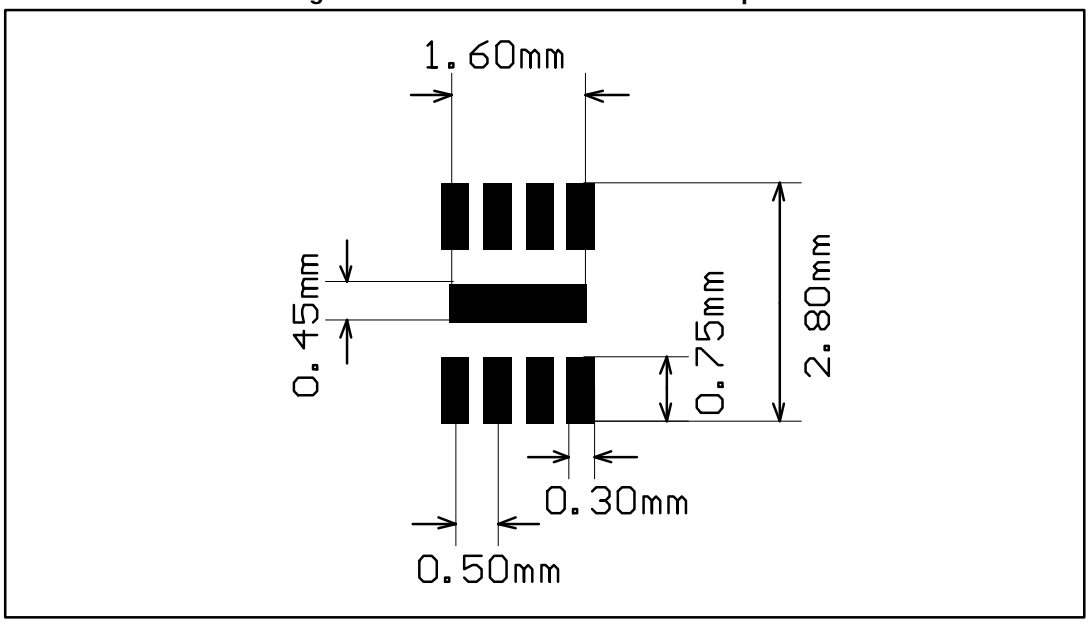

7.4 TSSOP8 package information

Figure 32: TSSOP8 package outline

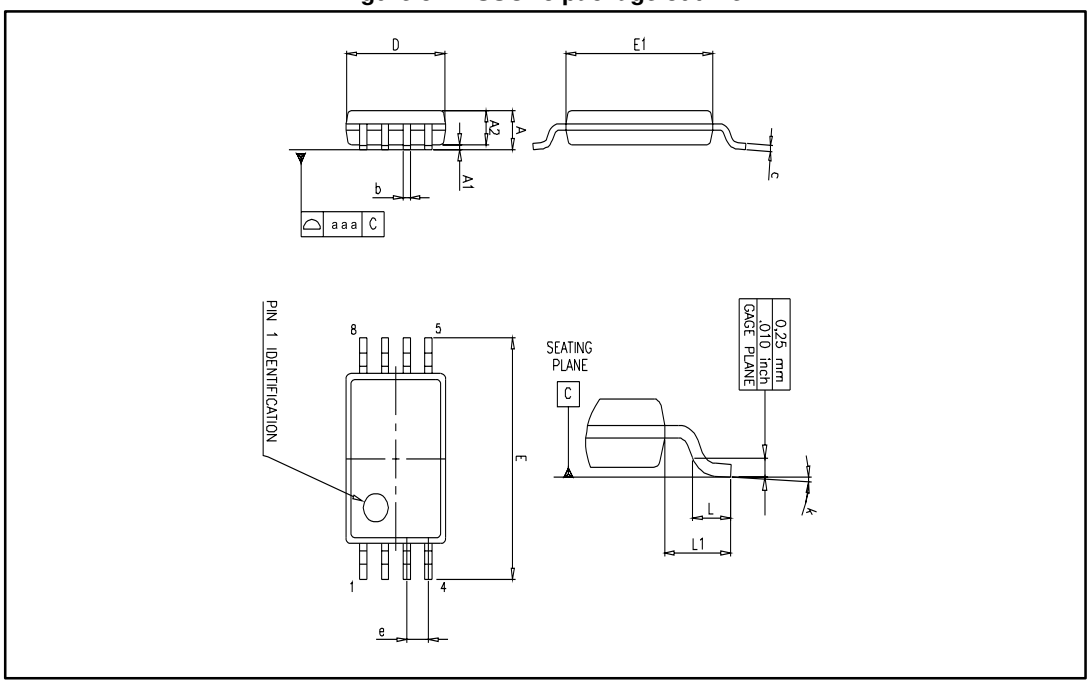

Table 7: TSSOP8 mechanical data

Ref.	Dimensions					
	Millimeters			Inches		
	Min.	Typ.	Max.	Min.	Typ.	Max.
A			1.2			0.047
A1	0.05		0.15	0.002		0.006
A2	0.80	1.00	1.05	0.031	0.039	0.041
b	0.19		0.30	0.007		0.012
c	0.09		0.20	0.004		0.008
D	2.90	3.00	3.10	0.114	0.118	0.122
E	6.20	6.40	6.60	0.244	0.252	0.260
E1	4.30	4.40	4.50	0.169	0.173	0.177
e		0.65			0.0256	
k	0°		8°	0°		8°
L	0.45	0.60	0.75	0.018	0.024	0.030
L1		1			0.039	
aaa		0.1			0.004	

8 Ordering information

Table 8: Order codes

Order code	Temperature range	Package	Packaging	Marking
LM158QT	-55 °C to 125 °C	DFN8 2x2	Tape and reel	K4A
LM158DT		SO8		158
LM258ADT	-40 °C to 105 °C	SO8		258A
LM258AYDT (1)		SO8, automotive grade		258AY
LM258DT		SO8		258
LM258APT		TSSOP8		258A
LM258AST		MiniSO8		K408
LM258QT		DFN8 2x2		K4C
LM358DT	0 °C to 70 °C	SO8		358
LM358YDT (1)		SO8, automotive grade		358Y
LM358ADT		SO8		358A
LM358PT LM358APT		TSSOP8		358 358A
LM358ST LM358AST		MiniSO8		K405 K404
LM358QT		DFN8 2x2		K4E

Notes:

(1)Qualified and characterized according to AEC Q100 and Q003 or equivalent, advanced screening according to AEC Q001 & Q 002 or equivalent.

9 Revision history

Table 9: Document revision history

Date	Revision	Changes
01-Jul- 2003	1	First release.
02-Jan-2005	2	R_{thja} and T_j parameters added in AMR Table 1: "Absolute maximum ratings".
01-Jul-2005	3	ESD protection inserted in Table 1: "Absolute maximum ratings".
05-Oct-2006	4	Added Figure 17: Phase margin vs. capacitive load.
30-Nov-2006	5	Added missing ordering information.
25-Apr-2007	6	Removed LM158A, LM258A and LM358A from document title. Corrected error in MiniSO-8 package data. L1 is 0.004 inch. Added automotive grade order codes in Section 7: "Ordering information".
12-Feb-2008	7	Corrected V_{CC} max (30 V instead of 32 V) in operating conditions. Changed presentation of electrical characteristics table. Deleted V_{opp} parameter in electrical characteristics table. Corrected miniSO-8 package information. Corrected temperature range for automotive grade order codes. Updated automotive grade footnotes in order codes table.
26-Aug-2008	8	Added limitations on input current in Table 1: "Absolute maximum ratings". Corrected title for Figure 11. Added E and L1 parameters in Table 4: "SO8 package mechanical data". Changed Figure 31: "TSSOP8 package mechanical drawing".
02-Sep-2011	9	In Section 6: "Package information", added: • DFN8 2 x 2 mm package mechanical drawing • DFN8 2 x 2 mm recommended footprint • DFN8 2 x 2 mm order codes.
06-Apr-2012	10	Removed order codes LM158YD, LM258AYD, LM258YD and LM358YD from Table 8: "Order codes".
11-Jun-2013	11	Table 8: "Order codes": removed order codes LM158D, LM158YDT, LM258YDT, and LM258AD; added automotive grade qualification to order codes LM258ATDT and LM358YDT; updated marking for order codes LM158DT and LM258D/LM258DT; updated temperature range, packages, and packaging for several order codes.
20-Jun-2014	12	Removed DIP8 package Corrected typos (W replaced with Ω, £ replaced with ≤) Updated Features Added Related products Table 3: replaced DV_{io} with $\Delta V_{io}/\Delta T$ and DI_{io} with $\Delta I_{io}/\Delta T$. Updated Table 7 for exposed pad dimensions Table 8: "Order codes": removed order codes LM258YPT and LM258AYPT; removed all order codes for devices with tube packing; added package code (NB) to DFN8 2x2 package.

Date	Revision	Changes
13-Nov-2015	13	Updated document layout Updated name of the "DFN8 2x2 (NB) mm" package to "DFN8 2x2" everywhere in datasheet. Section 2: "Package pin connections": placed the package's pinout in this section and added note about exposed pad. Table 8: "Order codes": removed order codes LM258ST, LM358YPT, and LM358AYPT.
24-Aug-2016	14	*Table 6: "DFN8 2x2 mechanical data"*: added typ. value for "L" dimension.

IMPORTANT NOTICE – PLEASE READ CAREFULLY

STMicroelectronics NV and its subsidiaries (“ST”) reserve the right to make changes, corrections, enhancements, modifications, and improvements to ST products and/or to this document at any time without notice. Purchasers should obtain the latest relevant information on ST products before placing orders. ST products are sold pursuant to ST’s terms and conditions of sale in place at the time of order acknowledgement.

Purchasers are solely responsible for the choice, selection, and use of ST products and ST assumes no liability for application assistance or the design of Purchasers’ products.

No license, express or implied, to any intellectual property right is granted by ST herein.

Resale of ST products with provisions different from the information set forth herein shall void any warranty granted by ST for such product.

ST and the ST logo are trademarks of ST. All other product or service names are the property of their respective owners.

Information in this document supersedes and replaces information previously supplied in any prior versions of this document.

© 2016 STMicroelectronics – All rights reserved