STPS10L25

Low drop power Schottky rectifier

Datasheet - production data

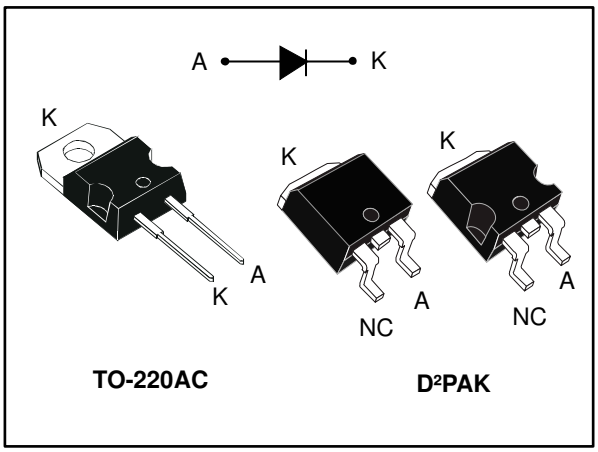

Features

- Very low forward voltage drop for less power dissipation
- Optimized conduction / reverse losses trade-off which means the highest efficiency in the applications
- Avalanche capability specified
- ECOPACK®2 compliant component for D²PAK on demand

Description

Single Schottky rectifier suited to switched mode power supplies and high frequency DC to DC converters.

This device is especially intended for use as a rectifier at the secondary of 3.3 V SMPS units.

Table 1: Device summary

Symbol	Value
$I_{F(AV)}$	10 A
V_{RRM}	25 V
V_F (typ.)	0.30 V
T_j (max.)	150 °C

This is information on a product in full production.

www.st.com

1 Characteristics

Table 2: Absolute ratings (limiting values at 25 °C, unless otherwise specified)

Symbol	Parameter		Value	Unit
V_{RRM}	Repetitive peak reverse voltage		25	V
$I_{F(RMS)}$	Forward rms current		30	A
$I_{F(AV)}$	Average forward current δ = 0.5 square wave	T_C = 140 °C	10	A
I_{FSM}	Surge non repetitive forward current	t_p = 10 ms sinusoidal	200	A
P_{ARM}	Repetitive peak avalanche power	t_p = 10 µs, T_j = 125 °C	395	W
T_{stg}	Storage temperature range		-65 to +150	°C
T_j	Maximum operating junction temperature (1)		150	

Notes:

(1)$(dP_{tot}/dT_j) < (1/R_{th(j-a)})$ condition to avoid thermal runaway for a diode on its own heatsink.

Table 3: Thermal parameters

Symbol	Parameter	Max .value	Unit
$R_{th(j-c)}$	Junction to case	1.5	°C/W

Table 4: Static electrical characteristics

Symbol	Parameter	Test conditions		Min.	Typ.	Max.	Unit
I_R(1)	Reverse leakage current	T_j = 25 °C	$V_R = V_{RRM}$	-		800	µA
		T_j = 125 °C		-	135	260	mA
V_F(1)	Forward voltage drop	T_j = 25 °C	I_F = 10 A	-		0.46	V
		T_j = 125 °C		-	0.30	0.35	
		T_j = 25 °C	I_F = 20 A	-		0.55	
		T_j = 125 °C		-	0.41	0.48	

Notes:

(1)Pulse test: t_p = 380 µs, δ < 2%

To evaluate the maximum conduction losses, use the following equation:

$P = 0.22 \times I_{F(AV)} + 0.013 \times I_{F^2(RMS)}$

1.1 Characteristics (curves)

Figure 1: Average forward power dissipation versus average forward current

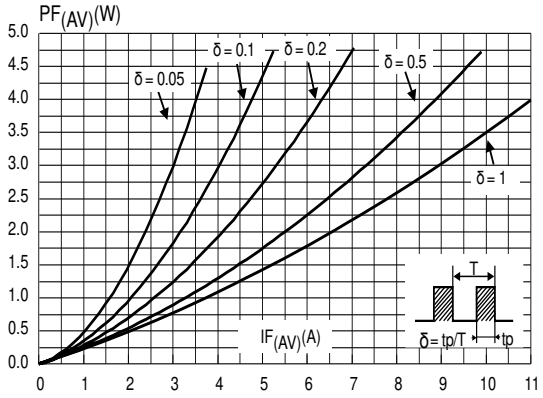

Figure 2: Average forward current versus ambient temperature (δ = 0.5)

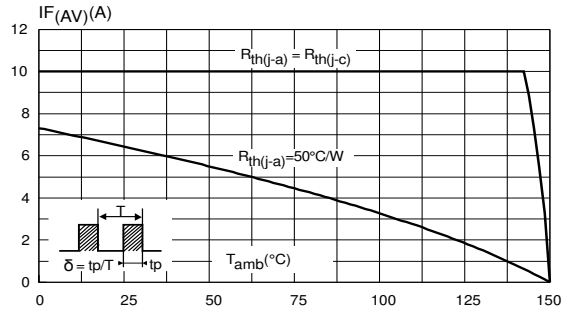

Figure 3: Normalized avalanche power deratings versus pulse duration (T_j = 125 °C)

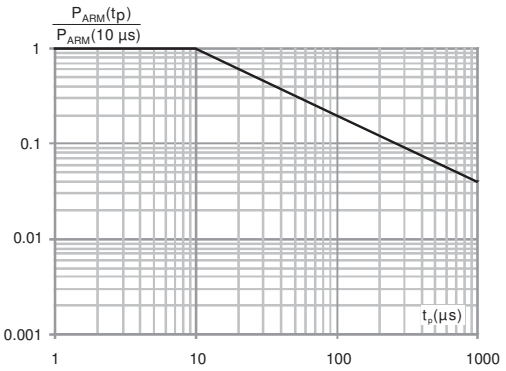

Figure 4: Relative variation of thermal impedance junction to case versus pulse duration

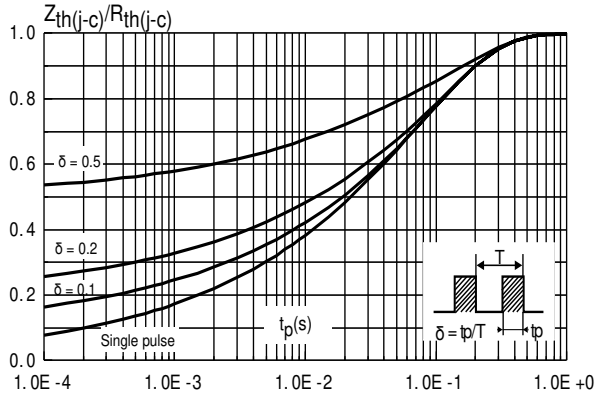

Figure 5: Reverse leakage current versus reverse voltage applied (typical values)

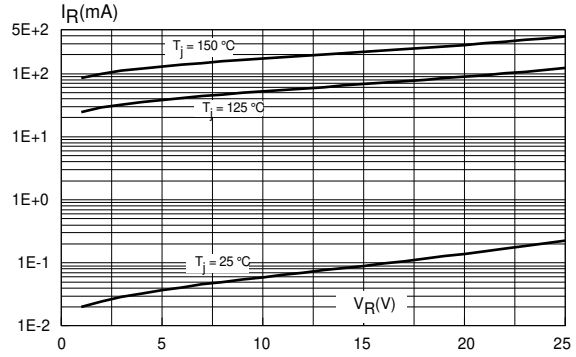

Figure 6: Junction capacitance versus reverse voltage applied (typical values)

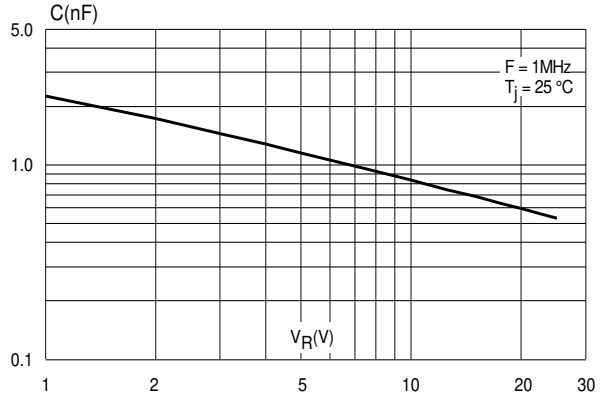

Figure 7: Forward voltage drop versus forward current (maximum values)

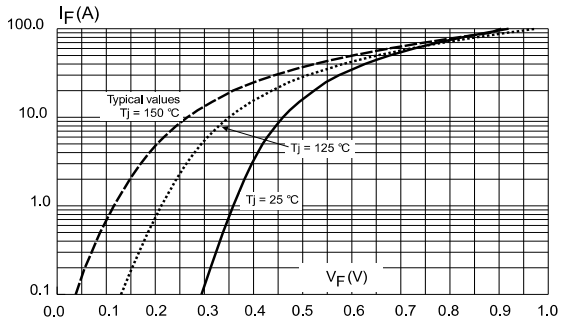

Figure 8: Thermal resistance junction to ambient versus copper surface under tab for D²PAK (typical values)

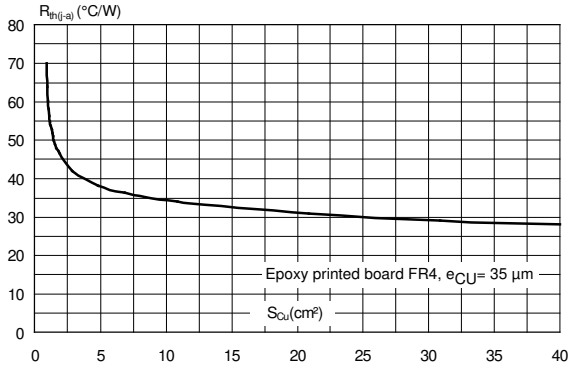

2 Package information

In order to meet environmental requirements, ST offers these devices in different grades of ECOPACK® packages, depending on their level of environmental compliance. ECOPACK® specifications, grade definitions and product status are available at: ***www.st.com***. ECOPACK® is an ST trademark.

- Cooling method: by conduction (C)
- Epoxy meets UL 94,V0
- Recommended torque value: 0.55 N·m (for TO-220AC)
- Maximum torque value: 0.7 N·m (for TO-220AC)

2.1 D²PAK package information

Figure 9: D²PAK package outline

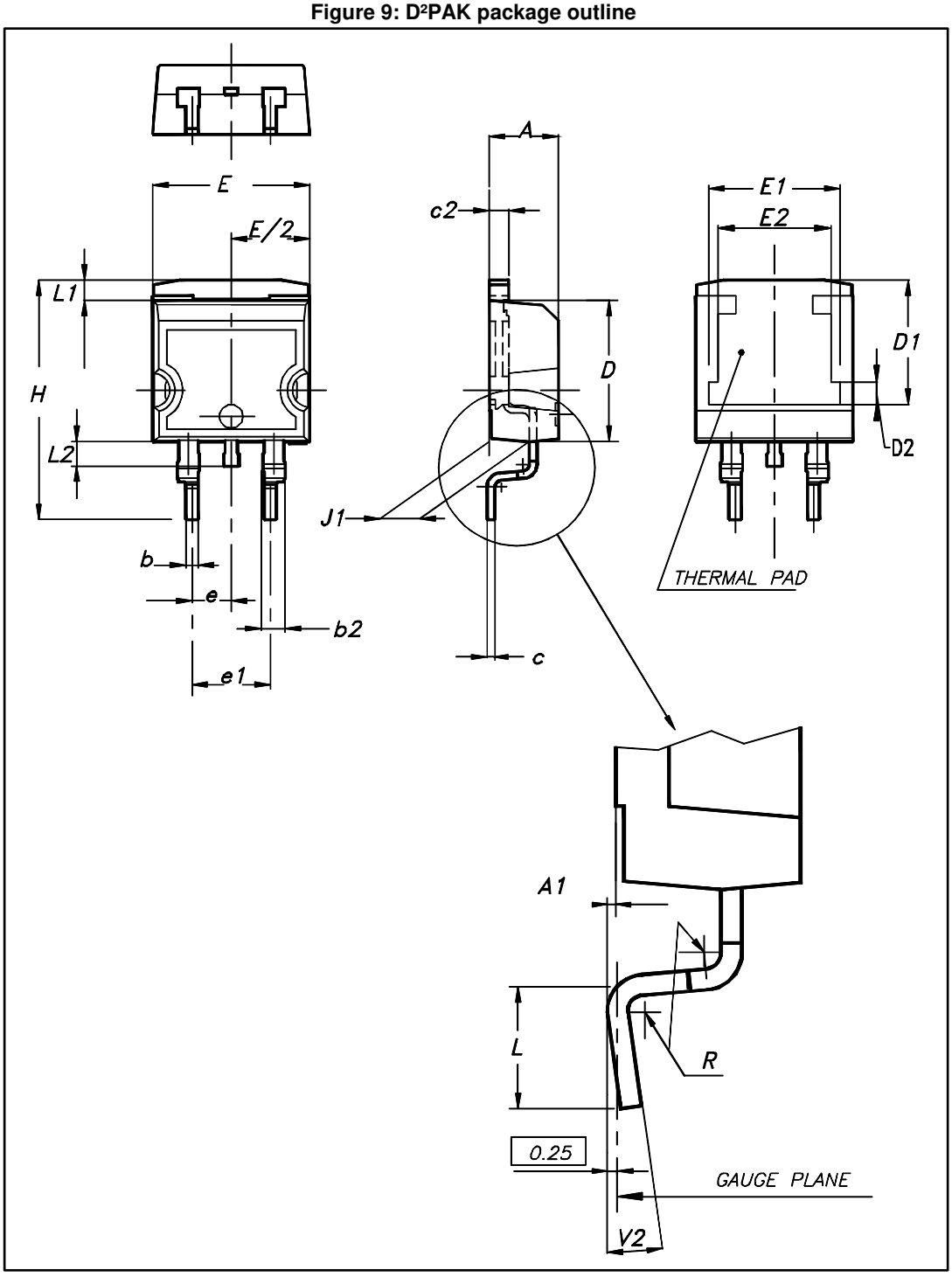

This package drawing may slightly differ from the physical package. However, all the specified dimensions are guaranteed.

Table 5: D²PAK package mechanical data

Ref.	Dimensions			
	Millimeters		Inches	
	Min.	Max.	Min.	Max.
A	4.36	4.60	0.172	0.181
A1	0.00	0.25	0.000	0.010
b	0.70	0.93	0.028	0.037
b2	1.14	1.70	0.045	0.067
c	0.38	0.69	0.015	0.027
c2	1.19	1.36	0.047	0.053
D	8.60	9.35	0.339	0.368
D1	6.90	8.00	0.272	0.311
D2	1.10	1.50	0.043	0.060
E	10.00	10.55	0.394	0.415
E1	8.10	8.90	0.319	0.346
E2	6.85	7.25	0.266	0.282
e	2.54 typ.		0.100	
e1	4.88	5.28	0.190	0.205
H	15.00	15.85	0.591	0.624
J1	2.49	2.90	0.097	0.112
L	1.90	2.79	0.075	0.110
L1	1.27	1.65	0.049	0.065
L2	1.30	1.78	0.050	0.070
R	0.4 typ.		0.015	
V2	0°	8°	0°	8°

Figure 10: D²PAK recommended footprint (dimensions in mm)

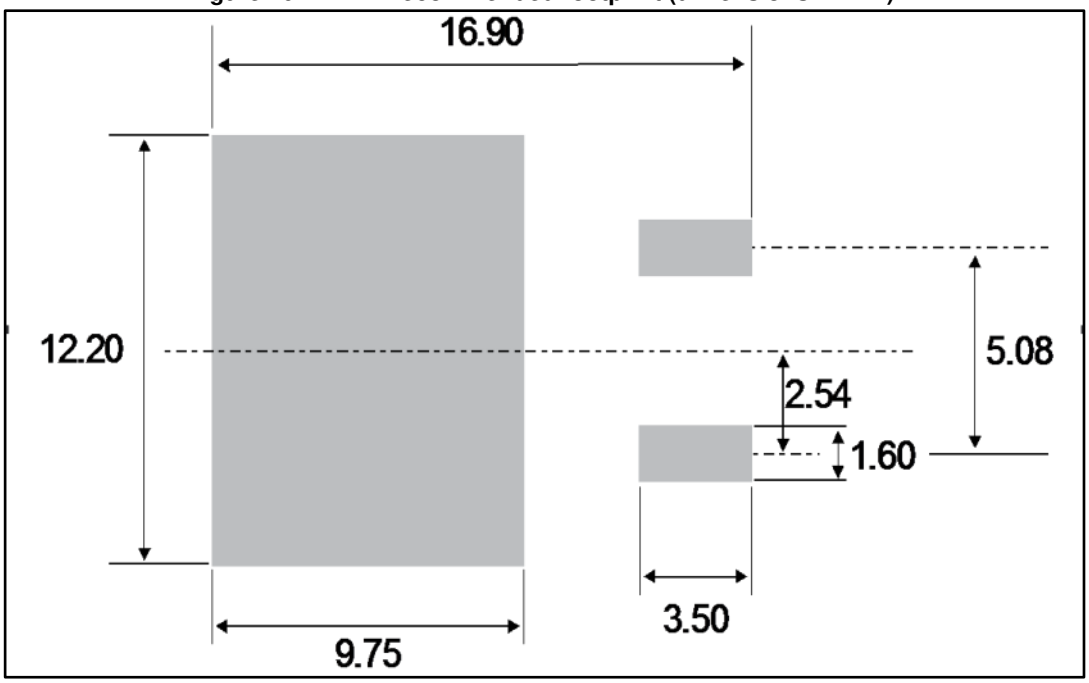

2.2 TO-220AC package information

Figure 11: TO-220AC package outline

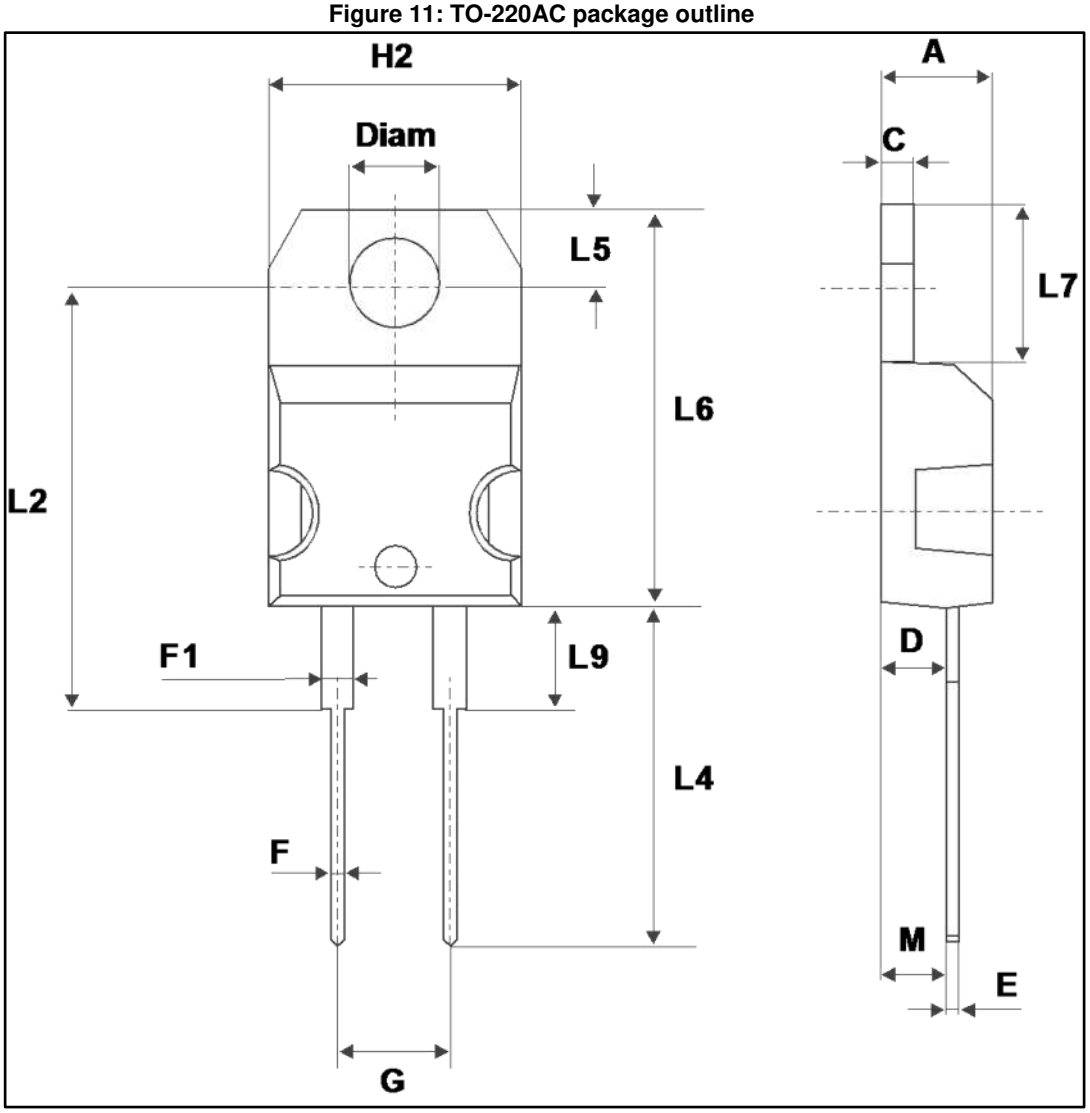

Table 6: TO-220AC package mechanical data

Ref.	Dimensions			
	Millimeters		Inches	
	Min.	Max.	Min.	Max.
A	4.40	4.60	0.173	0.181
C	1.23	1.32	0.048	0.051
D	2.40	2.72	0.094	0.107
E	0.49	0.70	0.019	0.027
F	0.61	0.88	0.024	0.034
F1	1.14	1.70	0.044	0.066
G	4.95	5.15	0.194	0.202
H2	10.00	10.40	0.393	0.409
L2	16.40 typ.		0.645 typ.	
L4	13.00	14.00	0.511	0.551
L5	2.65	2.95	0.104	0.116
L6	15.25	15.75	0.600	0.620
L7	6.20	6.60	0.244	0.259
L9	3.50	3.93	0.137	0.154
M	2.6 typ.		0.102 typ.	
Diam	3.75	3.85	0.147	0.151

3 Ordering information

Table 7: Ordering information

Order code	Marking	Package	Weight	Base qty.	Delivery mode
STPS10L25D	STPS10L25D	TO-220AC	1.86 g	50	Tube
STPS10L25G-TR	STPS10L25G	D²PAK	1.38 g	1000	Tape and reel

4 Revision history

Table 8: Document revision history

Date	Revision	Changes
Jul-2003	4B	
17-Oct-2016	5	Updated cover page, *Section 3: "Characteristics"*, *Section 3.1: "Characteristics (curves)"*, *Section 4.2: "D²PAK package information"* and *Table 7: "Ordering information"*.

IMPORTANT NOTICE – PLEASE READ CAREFULLY

STMicroelectronics NV and its subsidiaries (“ST”) reserve the right to make changes, corrections, enhancements, modifications, and improvements to ST products and/or to this document at any time without notice. Purchasers should obtain the latest relevant information on ST products before placing orders. ST products are sold pursuant to ST’s terms and conditions of sale in place at the time of order acknowledgement.

Purchasers are solely responsible for the choice, selection, and use of ST products and ST assumes no liability for application assistance or the design of Purchasers’ products.

No license, express or implied, to any intellectual property right is granted by ST herein.

Resale of ST products with provisions different from the information set forth herein shall void any warranty granted by ST for such product.

ST and the ST logo are trademarks of ST. All other product or service names are the property of their respective owners.

Information in this document supersedes and replaces information previously supplied in any prior versions of this document.

© 2016 STMicroelectronics – All rights reserved