BU941ZT/BU941ZTFP
BUB941ZT

HIGH VOLTAGE IGNITION COIL DRIVER
NPN POWER DARLINGTON

- VERY RUGGED BIPOLAR TECHNOLOGY
- BUILT IN CLAMPING ZENER
- HIGH OPERATING JUNCTION TEMPERATURE
- WIDE RANGE OF PACKAGES
- SURFACE-MOUNTING D2PAK (TO-263) POWER PACKAGE IN TUBE (NO SUFFIX) OR IN TAPE & REEL (SUFFIX "T4")

APPLICATIONS

- HIGH RUGGEDNESS ELECTRONIC IGNITIONS

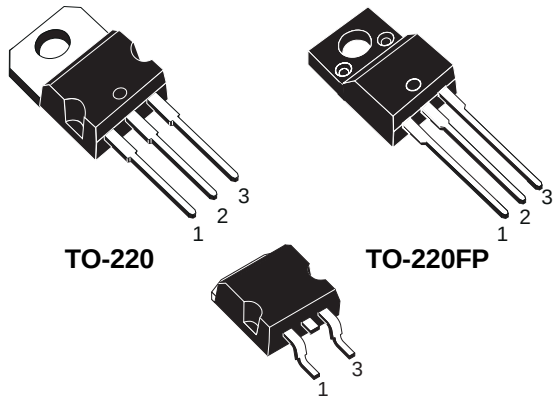

INTERNAL SCHEMATIC DIAGRAM

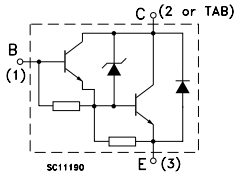

ABSOLUTE MAXIMUM RATINGS

Symbol	Parameter	Value			Unit
V_{CEO}	Collector-Emitter Voltage (I_B = 0)	350			V
V_{EBO}	Emitter-Base Voltage (I_C = 0)	5			V
I_C	Collector Current	15			A
I_{CM}	Collector Peak Current	30			A
I_B	Base Current	1			A
I_{BM}	Base Peak Current	5			A
		BU941ZT	**BU941ZTFP**	**BUB941ZT**	
P_{tot}	Total Dissipation at T_c = 25 °C	150	55	150	W
T_{stg}	Storage Temperature	-65 to 175	-65 to 175	-65 to 175	°C
T_j	Max. Operating Junction Temperature	175	175	175	°C

THERMAL DATA

		TO-220 D2PAK	TO-220FP	
$R_{thj\text{-}case}$	Thermal Resistance Junction-case Max	1	2.7	°C/W

ELECTRICAL CHARACTERISTICS (T_{case} = 25 °C unless otherwise specified)

Symbol	Parameter	Test Conditions	Min.	Typ.	Max.	Unit
I_{CEO}	Collector Cut-off Current (I_B = 0)	V_{CE} = 300 V V_{CE} = 300 V T_j = 125 °C			100 0.5	µA mA
I_{EBO}	Emitter Cut-off Current (I_C = 0)	V_{EB} = 5 V			20	mA
V_{CL}*	Clamping Voltage	I_C = 100 mA	350		500	V
$V_{CE(sat)}$*	Collector-Emitter Saturation Voltage	I_C = 8 A I_B = 100 mA I_C = 10 A I_B = 250 mA			1.8 1.8	V V
$V_{BE(sat)}$*	Base-Emitter Saturation Voltage	I_C = 8 A I_B = 100 mA I_C = 10 A I_B = 250 mA			2.2 2.5	V V
h_{FE}*	DC Current Gain	I_C = 5 A V_{CE} = 10 V	300			
V_F	Diode Forward Voltage	I_F = 10 A			2.5	V
	Functional Test (see fig. 1)	V_{CC} = 24 V L= 7 mH	10			A
t_s t_f	INDUCTIVE LOAD Storage Time Fall Time (see fig. 3)	V_{CC} = 12 V L= 7 mH V_{clamp} = 300V I_C = 7 A I_B = 70 mA V_{BE} = 0 R_{BE} = 47 Ω		15 0.5		µs µs

* Pulsed: Pulse duration = 300 µs, duty cycle 1.5 %

Safe Operating Area

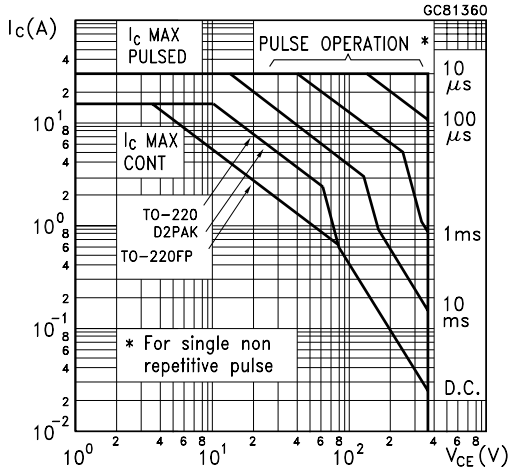

DC Current Gain

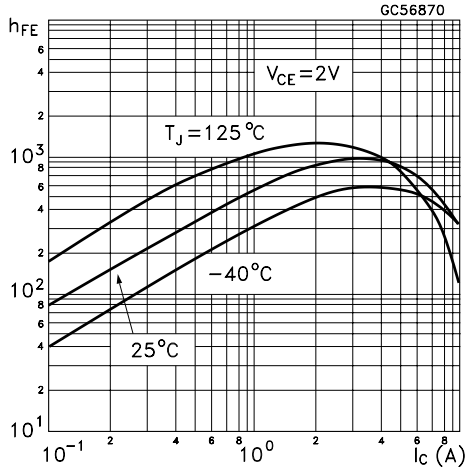

DC Current Gain

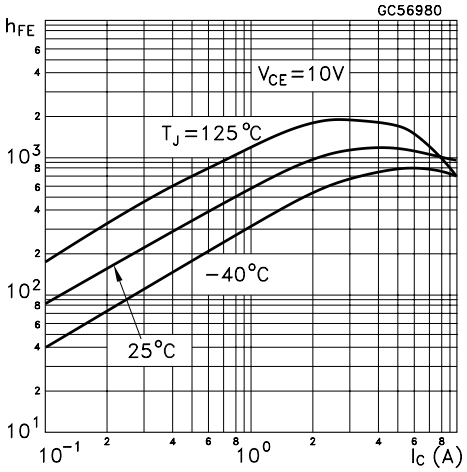

Collector-emitter Saturation Voltage

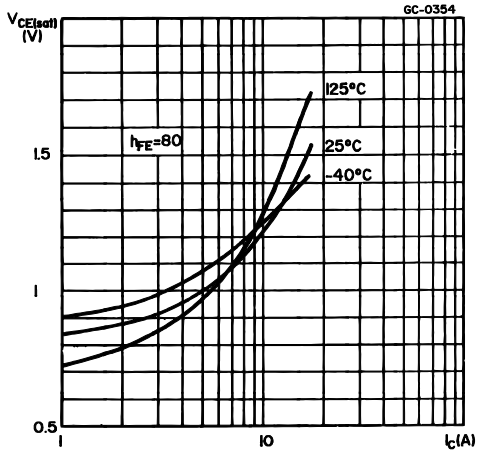

Collector-emitter Saturation Voltage

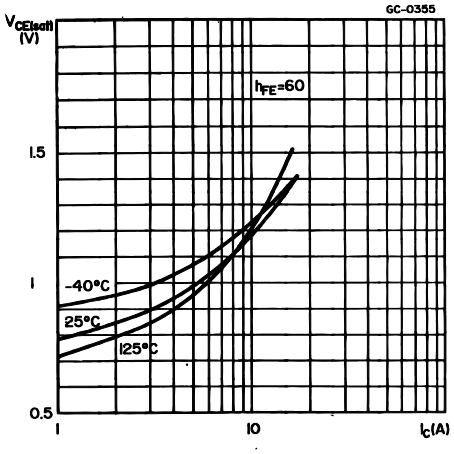

Base-emitter Saturation Voltage

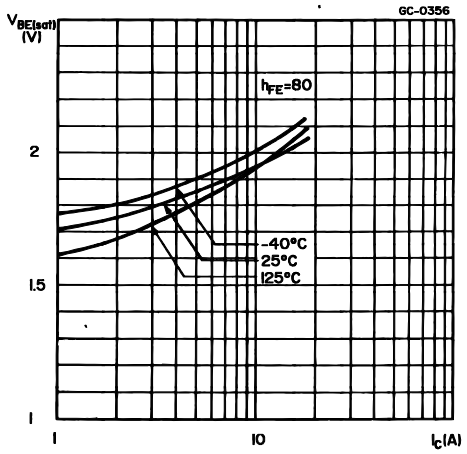

Base-emitter Saturation Voltage

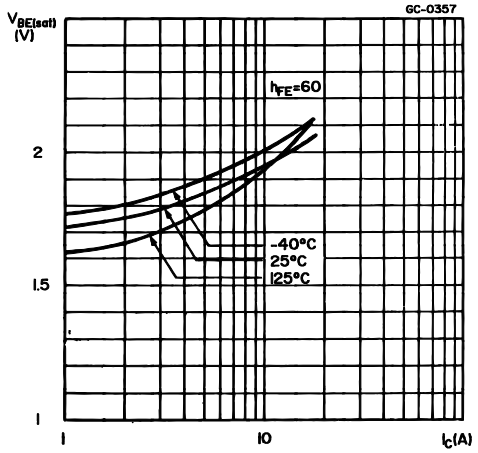

Collector-emitter Saturation Voltage

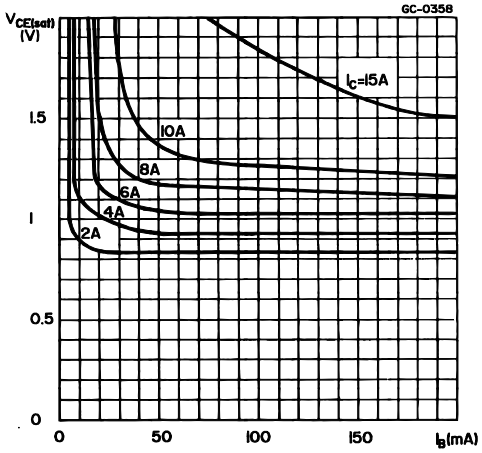

FIGURE 1: Functional Test Circuit

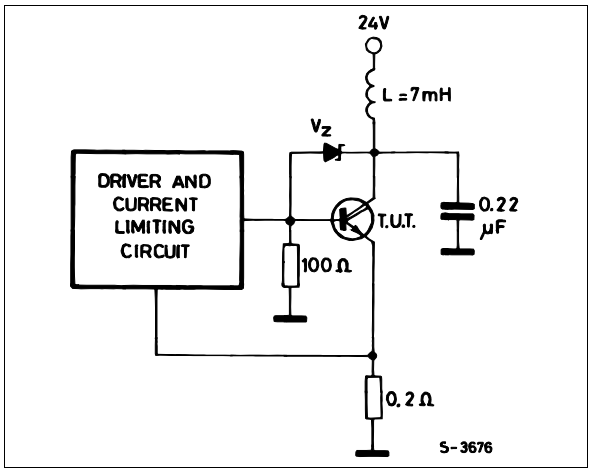

FIGURE 2: Functional Test Waveforms

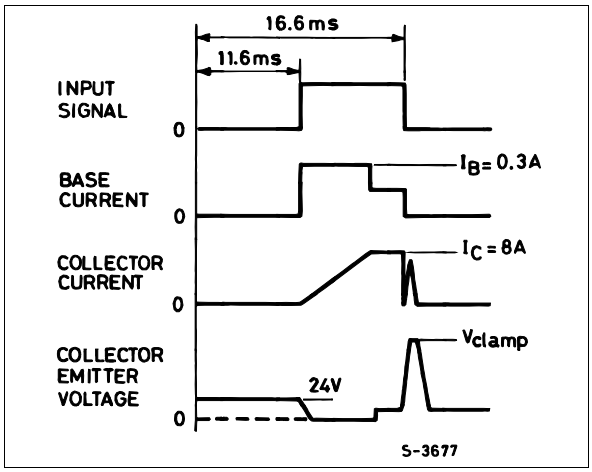

FIGURE 3: Switching Time Test Circuit

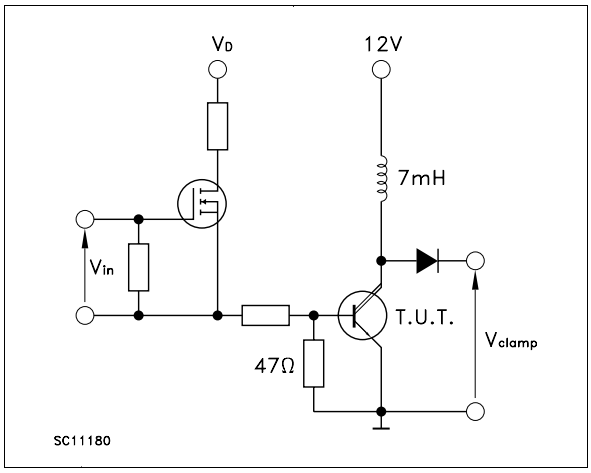

TO-220 MECHANICAL DATA

DIM.	mm			inch		
	MIN.	TYP.	MAX.	MIN.	TYP.	MAX.
A	4.40		4.60	0.173		0.181
C	1.23		1.32	0.048		0.051
D	2.40		2.72	0.094		0.107
D1		1.27			0.050	
E	0.49		0.70	0.019		0.027
F	0.61		0.88	0.024		0.034
F1	1.14		1.70	0.044		0.067
F2	1.14		1.70	0.044		0.067
G	4.95		5.15	0.194		0.203
G1	2.4		2.7	0.094		0.106
H2	10.0		10.40	0.393		0.409
L2		16.4			0.645	
L4	13.0		14.0	0.511		0.551
L5	2.65		2.95	0.104		0.116
L6	15.25		15.75	0.600		0.620
L7	6.2		6.6	0.244		0.260
L9	3.5		3.93	0.137		0.154
DIA.	3.75		3.85	0.147		0.151

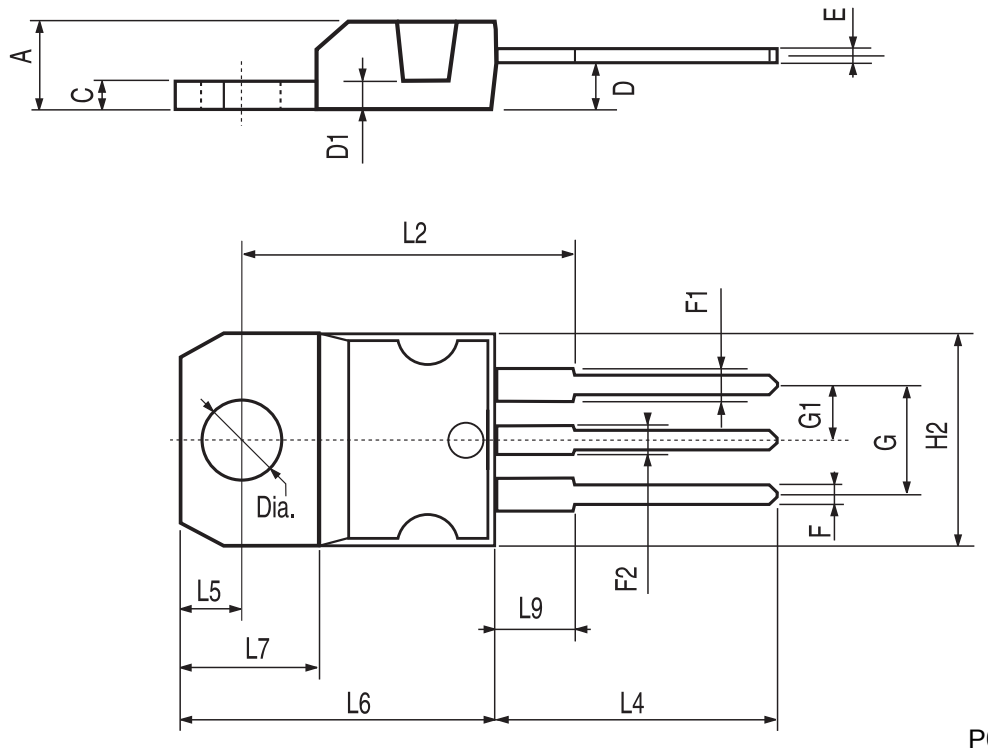

P011C

TO-220FP MECHANICAL DATA

DIM.	mm			inch		
	MIN.	TYP.	MAX.	MIN.	TYP.	MAX.
A	4.4		4.6	0.173		0.181
B	2.5		2.7	0.098		0.106
D	2.5		2.75	0.098		0.108
E	0.45		0.7	0.017		0.027
F	0.75		1	0.030		0.039
F1	1.15		1.7	0.045		0.067
F2	1.15		1.7	0.045		0.067
G	4.95		5.2	0.195		0.204
G1	2.4		2.7	0.094		0.106
H	10		10.4	0.393		0.409
L2		16			0.630	
L3	28.6		30.6	1.126		1.204
L4	9.8		10.6	0.385		0.417
L6	15.9		16.4	0.626		0.645
L7	9		9.3	0.354		0.366
Ø	3		3.2	0.118		0.126

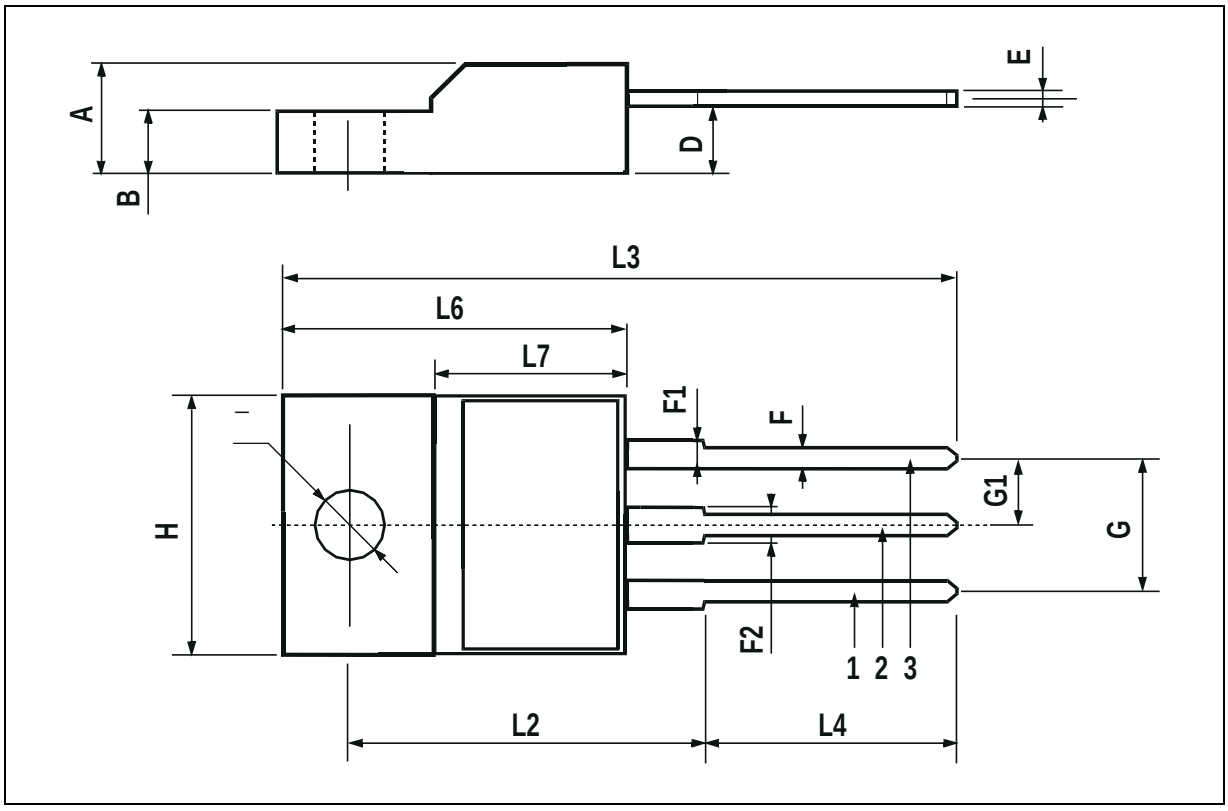

TO-263 (D^2PAK) MECHANICAL DATA

DIM.	mm			inch		
	MIN.	TYP.	MAX.	MIN.	TYP.	MAX.
A	4.4		4.6	0.173		0.181
A1	2.49		2.69	0.098		0.106
B	0.7		0.93	0.027		0.036
B2	1.14		1.7	0.044		0.067
C	0.45		0.6	0.017		0.023
C2	1.21		1.36	0.047		0.053
D	8.95		9.35	0.352		0.368
E	10		10.4	0.393		0.409
G	4.88		5.28	0.192		0.208
L	15		15.85	0.590		0.624
L2	1.27		1.4	0.050		0.055
L3	1.4		1.75	0.055		0.068

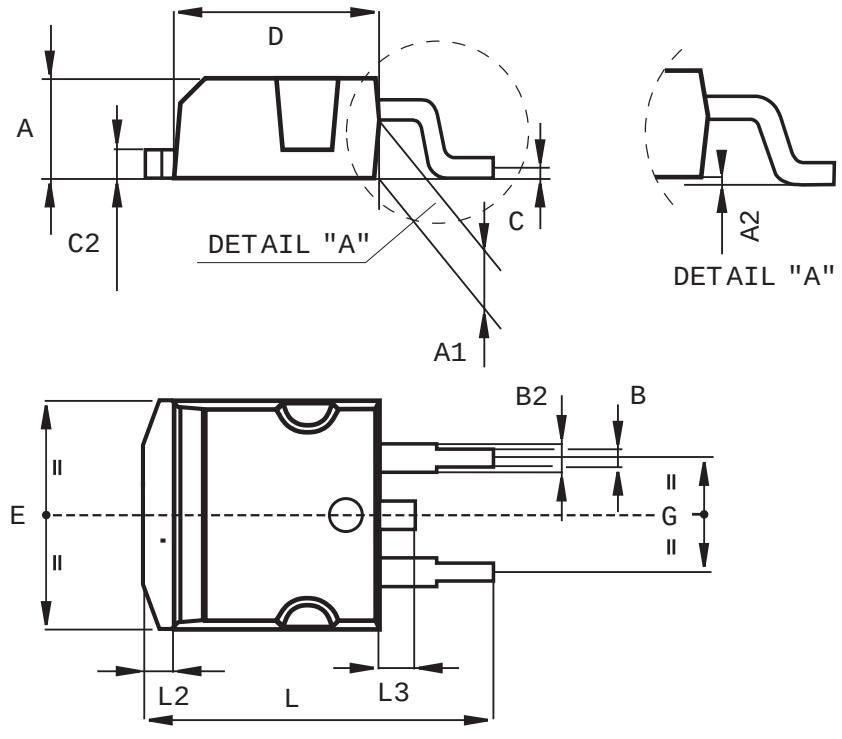

P011P6/E

Information furnished is believed to be accurate and reliable. However, STMicroelectronics assumes no responsibility for the consequences of use of such information nor for any infringement of patents or other rights of third parties which may result from its use. No license is granted by implication or otherwise under any patent or patent rights of STMicroelectronics. Specification mentioned in this publication are subject to change without notice. This publication supersedes and replaces all information previously supplied. STMicroelectronics products are not authorized for use as critical components in life support devices or systems without express written approval of STMicroelectronics.

The ST logo is a registered trademark of STMicroelectronics

© 1998 STMicroelectronics – Printed in Italy – All Rights Reserved

STMicroelectronics GROUP OF COMPANIES

Australia - Brazil - Canada - China - France - Germany - Italy - Japan - Korea - Malaysia - Malta - Mexico - Morocco - The Netherlands - Singapore - Spain - Sweden - Switzerland - Taiwan - Thailand - United Kingdom - U.S.A.

http://www.st.com